AGENDA

March 1, 2017

CITY COUNCIL MEETING
HOUSING AUTHORITY MEETING
7:00 p.m.
City Council Chambers
311 Vernon Street
Roseville, California

1. CALL TO ORDER

2. ROLL CALL

Vice Mayor:	**Bonnie Gore**
Councilmember:	**Scott Alvord**
Councilmember:	**Tim Herman**
Councilmember:	**John Allard**
Mayor:	**Susan Rohan**

3. PLEDGE OF ALLEGIANCE

4. MEETING PROCEDURES

NOTICE TO THE PUBLIC

All Items on the agenda will be open for the public comment before final action is taken. Speakers are requested to restrict comments to the item as it appears on the agenda and stay within a five (5) - minute time limit. The Mayor has the discretion of limiting the total discussion time for an item.

5. PUBLIC COMMENTS

NOTICE TO THE PUBLIC

Persons may address the City Council on items not on this agenda. Please complete a "Speaker Information Card" and present it to the City Clerk prior to the start of the meeting. Speakers shall restrict their comments to issues that are within the subject jurisdiction of the City Council and limit their comments to three (3) minutes per person. The total time allocated for Public Comment is 25 minutes. The Brown Act, with certain exceptions, does not permit the City Council to discuss or take action on issues that are not listed on the agenda.

6. CONSENT CALENDAR

NOTICE TO THE PUBLIC

All matters listed under Consent Calendar are considered to be routine and all will be passed by one motion. There will be no discussion of these items unless members of the City Council or the public request specific items be removed from the Consent Calendar for separate discussion. Any member of the public may address the City Council on items on the Consent Calendar. Public comments on any item or items on the Consent Calendar are limited to five (5) minutes per speaker

BEGINNING OF CONSENT CALENDAR

Bids / Purchases / Services

6.1. Roller Compacted Concrete Pilot Project - Award of Contract, Execution of Agreement and Budget Adjustment

Memo from Assistant Engineer Noah Siviglia and Public Works Director Rhon Herndon recommending Council adopt RESOLUTION NO. 17-79 APPROVING AN AGREEMENT BETWEEN CITY OF ROSEVILLE AND PAPICH CONSTRUCTION CO., INC, AND AUTHORIZING THE CITY MANAGER TO EXECUTE IT ON BEHALF OF THE CITY OF ROSEVILLE; and adopt ORDINANCE NO. 5806 OF THE COUNCIL OF THE CITY OF ROSEVILLE AUTHORIZING CERTAIN AMENDMENTS TO THE 2016-17 BUDGET AND DECLARING THIS ORDINANCE TO BE IMMEDIATELY EFFECTIVE AS AN APPROPRIATION MEASURE. Staff recommends that the City Council award the Roller Compacted Concrete Pilot Project to lowest responsive bidder, Papich Construction Co., Inc., in the amount of $7,359,599.99 with authorization for staff to exceed the award amount by 10% ($735,960.00) as a construction contingency. A budget adjustment is necessary in the amount of $1,700,000.00 from the Highway Users Tax, $1,500,000.00 from Traffic Mitigation Fees, $4,850,000.00 from the Local Transportation Fund, and $350,000.00 from Gas Tax. No General Funds are being used. This project will replace the failed asphalt concrete pavement on portions of Washington Boulevard, Atkinson Street, Denio Loop, and Hickory Street with roller compacted concrete pavement. Curb ramp upgrades within the project limits are also included to ensure that all curb ramps meet current Americans with Disabilities Act standards.

CC #: 8294

File #: 0900-04-01 & 0201-01

CONTACT: Noah Siviglia 916-746-1379 nsiviglia@roseville.ca.us

6.2. Toyota Gas Powered Forklift (RFQ 01-3122) - Purchase Order

Memo from Buyer Tiffany Valdez and Central Services Director Paul Diefenbach recommending Council authorize a purchase order to Toyota Material Handling as the lowest responsive bidder for RFQ 01-3122 for one gas powered Toyota Forklift to replace vehicle number 90-699. The forklift is used by the Public Works Traffic Signal Maintenance Division staff for the materials handling of heavy and bulky stock items that cannot be moved by hand or with a hand truck. The total cost of the forklift including tax and options is $29,758.00. Funding for

this vehicle is included in the FY2016-17 Auto Replacement Budget.

CC #: 8288

File #: 0203-13

CONTACT: Tiffany Valdez 916-774-5708 tvaldez@roseville.ca.us

Resolutions

6.3. AB 2021 Energy Efficiency Targets

Memo from Electric Business Analyst Renee Laffey and Electric Utility Director Michelle Bertolino recommending Council adopt RESOLUTION NO. 17-82 APPROVING ROSEVILLE ELECTRIC UTILITY'S ENERGY EFFICIENCY TARGETS. Staff recommends Council approve Roseville Electric Utility's energy efficiency targets for the next 10 year period as required by California Assembly Bill 2021. There is no financial impact from the approval of the 10 year energy efficiency targets.

CC #: 8300

File #: 0800-03

CONTACT: Renee Laffey 916-774-5671 rlaffey@roseville.ca.us

6.4. Water System Interconnection Agreement

Memo from Water Utility Manager Jim Mulligan and Environmental Utilities Director Richard Plecker recommending Council adopt RESOLUTION NO. 17-84 APPROVING AN INTERCONNECTION AGREEMENT BETWEEN CITRUS HEIGHTS WATER DISTRICT AND THE CITY OF ROSEVILLE, AND AUTHORIZING THE CITY MANAGER TO EXECUTE IT ON BEHALF OF THE CITY OF ROSEVILLE. This agreement will formalize the operations, maintenance and water cost between two existing interconnections and the construction of two future interconnections. The interconnections benefit the City by providing emergency and backup water supply that increases the City's water system reliability. There is no fiscal impact as a result of signing the agreement

CC #: 8303

File #: 0800-02

CONTACT: Jim Mulligan 916-774-5668 jmulligan@roseville.ca.us

6.5. City of Roseville Debt Management Policy and Goals and Policies Concerning the Use of Mello-Roos Community Facitlities Act of 1982

Memo from Administrative Analyst Jeannine Thrash and Chief Financial Officer Jay Panzica recommending Council adopt RESOLUTION NO. 17-85 ADOPTING A DEBT MANAGEMENT POLICY AND GOALS AND POLICIES CONCERNING THE USE OF MELLO-ROOS COMMUNITY FACILITIES ACT OF 1982. This item approves changes to the City of Roseville Debt Management Policy effective January 31, 2017 and the City of Roseville Goals and Policies Concerning the Use of Mello-Roos Community Facilities Act of 1982 effective January 31, 2017. Neither the Debt Management Policy nor the Goals and Policies Concerning the Use of Mello-Roos Community Facilities Act of 1982 will have any impact on the City's General Fund.

CC #: 8304

File #: 0206 & 0206-03

CONTACT: Jeannine Thrash 916-774-5473 jthrash@roseville.ca.us
Jay Panzica 916-774-5320 jpanzica@roseville.ca.us

6.6. Mobility Management Grant Amendment and Authorization

Memo from Financial Analyst Elizabeth Haydu and Public Works Director Rhon Herndon recommending Council adopt RESOLUTION NO. 17-83 APPROVING CALIFORNIA DEPARTMENT OF TRANSPORTATION (CALTRANS) STANDARD AGREEMENT AMENDMENT NO. 1 AND AUTHORIZING CITY MANAGER TO SUBMIT A FEDERAL TRANSPORTATION ADMINISTRATION (FTA) SECTION 5310 GRANT APPLICATION AND EXECUTE ALL RELATED FORMS AND AGREEMENTS. This item requests authorization to amend an agreement between the City and Caltrans for use of Federal Transit Administration (FTA) Section 5310 funds for the South Placer Mobility Management Program extending the time frame of the agreement to November 15, 2018, but will not otherwise modify the grant. This item also requests authorization to submit a new grant application to Caltrans for additional FTA Mobility Management grant funds in an amount up to $160,000.00 with up to $40,000.00 in matching funds to continue the South Placer Mobility Management Program for an additional two years. General fund monies are not being used for this program.

CC #: 8301

File #: 0214 & 0721-03

CONTACT: Elizabeth Haydu 916-746-1302 ehaydu@roseville.ca.us

6.7. Mike Shellito Indoor Pool Splash Pad Phase 1 Project - Notice of Completion

Memo from Park Development Analyst Rjahja Canlas and Parks, Recreation & Libraries Director Dion Louthan recommending Council adopt RESOLUTION NO. 17-78 ACCEPTING THE PUBLIC WORK KNOWN AS MIKE SHELLITO INDOOR POOL SPLASH PAD PHASE 1 PROJECT, APPROVING THE "NOTICE OF COMPLETION", AND AUTHORIZING THE PARKS, RECREATION AND LIBRARIES DIRECTOR TO EXECUTE SAID NOTICE ON BEHALF OF THE CITY OF ROSEVILLE. The Parks, Recreation & Libraries Department has made a final inspection of the Mike Shellito Indoor Pool Splash Pad Phase 1 Project and has found that all contract work has been completed in accordance with the improvement plans and specifications. The project is now ready for acceptance. Phase 1 included an outdoor recirculating water play area located within the existing fenced area of the Mike Shellito Indoor Pool. In accordance with City specifications, the contractor shall guarantee the installation of these improvements for a period of twelve (12) months from the date of this Notice of Completion. Funding for the project was approved in the FY2012-13 budget through the general city-wide park fund.

CC #: 8293

File #: 0707

CONTACT: Rjahja Canlas 916-772-7529 rcanlas@roseville.ca.us

6.8. HOUSING AUTHORITY - Software Upgrade Budget Adjustment

Memo from Administrative Analyst Melissa Hagan and Economic Development Director Chris Robles recommending City Council acting as the Housing Authority adopt HOUSING AUTHORITY OF THE CITY OF ROSEVILLE RESOLUTION NO. 2-17 APPROVING A BUDGET ADJUSTMENT FOR FISCAL YEAR 2016-2017. This item will use Housing Authority funds and make the necessary budget adjustment in the amount of $8,139.00 in order to fund a software upgrade to the Housing Authority's Housing Pro software program. The source of funds for the upgrade are included in the available resources of Housing Authority Fund. This action has no impact on the General Fund.

CC #: 8291

File #: 0709 & 0201-01

CONTACT: Melissa Hagan 916-774-5476 mhagan@roseville.ca.us

Ordinances (for introduction and first reading)

6.9. 2017 Speed Limit Ordinance Update

Memo from Assistant Engineer Jerome Pastor and Public Works Director Rhon Herndon recommending Council introduce for first reading ORDINANCE OF THE COUNCIL OF THE CITY OF ROSEVILLE AMENDING SECTION 11.28.010 OF CHAPTER 11.28 OF TITLE 11 OF THE ROSEVILLE MUNICIPAL CODE REGARDING SPEED LIMITS. This item requests that Council approve the annual speed limit ordinance update. This will ensure the City's speed limits will be in compliance with state law and will be radar enforceable. There is no fiscal impact.

CC #: 8289

File #: 0316-04

CONTACT: Jerome Pastor 916-746-1352 jpastor@roseville.ca.us

6.10. Cooperative Purchasing - Municipal Code Amendment

Memo from Purchasing and Warehouse Manager Shannon Wiest and Central Services Director Paul Diefenbach recommending Council introduce for first reading ORDINANCE OF THE COUNCIL OF THE CITY OF ROSEVILLE AMENDING SECTION 4.12.105 OF CHAPTER 4.12 OF TITLE 4 OF THE ROSEVILLE MUNICIPAL CODE REGARDING COOPERATIVE PURCHASING. These revisions were made to reflect the City's current business needs, and will increase the number of cooperative agreements the City is able to leverage, ultimately saving the City time and money. There is no fiscal impact from the proposed ordinance amendment.

CC #: 8290

File #: 0203

CONTACT: Shannon Wiest 916-774-5705 swiest@roseville.ca.us

Ordinances (for introduction and adoption - appropriation/urgency measures)

6.11. Blue Oaks Commerce Center Project - Materials Testing Service Agreement

Amendment and Budget Adjustment

Memo from Senior Engineer Guy Howes and Development Services Director Kevin Payne recommending Council adopt RESOLUTION NO. 17-81 APPROVING AMENDMENT NO. 1 TO SERVICE AGREEMENT BETWEEN CITY OF ROSEVILLE AND RMA GROUP, INC., AND AUTHORIZING THE CITY MANAGER TO EXECUTE IT ON BEHALF OF THE CITY OF ROSEVILLE; and adopt ORDINANCE NO. 5808 OF THE COUNCIL OF THE CITY OF ROSEVILLE AUTHORIZING CERTAIN AMENDMENTS TO THE 2016-17 BUDGET AND DECLARING THIS ORDINANCE TO BE IMMEDIATELY EFFECTIVE AS AN APPROPRIATION MEASURE. This is a request of Council to approve an amendment increasing the service agreement by $10,000.00 to a new not-to-exceed amount of $28,767.13, and approving a budget adjustment in the amount of $10,000.00. These funds are considered “pass-through” monies, in which all plan check and inspection service expenses are reimbursed by the applicant/developer. There is no General Fund impact.

CC #: 8298

File #: 0800-06 & 0201-01

CONTACT: Guy Howes 916-774-5430 ghowes@roseville.ca.us

6.12. On-Call Construction Inspection Services - Professional Services Agreement Amendment and Budget Adjustment

Memo from Senior Engineer Guy Howes and Development Services Director Kevin Payne recommending Council adopt RESOLUTION NO. 17-80 APPROVING A FIRST AMENDMENT TO PROFESSIONAL SERVICES AGREEMENT BETWEEN THE CITY OF ROSEVILLE AND PSOMAS, AND AUTHORIZING THE CITY MANAGER TO EXECUTE IT ON BEHALF OF THE CITY OF ROSEVILLE; and adopt ORDINANCE NO. 5807 OF THE COUNCIL OF THE CITY OF ROSEVILLE AUTHORIZING CERTAIN AMENDMENTS TO THE 2016-17 BUDGET AND DECLARING THIS ORDINANCE TO BE IMMEDIATELY EFFECTIVE AS AN APPROPRIATION MEASURE. Multiple departments have utilized this on-call construction inspection services agreement and have nearly exhausted the original not-to-exceed budget of $500,000.00, thus the necessity to request Council approve the amendment to the original master agreement and approve the requested budget adjustment for an additional $500,000.00. The actions requested as part of this item have no impact to the City's General Fund. All funds are considered "pass-through".

CC #: 8297

File #: 0800-06 & 0201-01

CONTACT: Guy Howes 916-774-5430 ghowes@roseville.ca.us

Reports / Requests

6.13. Out of State Travel Request - Police Department

Memo from Department Information Officer Dee Dee Gunther and Police Chief Daniel Hahn recommending Council approve out of state travel for a police sergeant to attend a hostage negotiation conference in Saint Petersburg, Florida, from June 4-9, 2017. The conference will include speakers and training

in negotiation-related psychology, stress management, case studies, and other topics of interest to hostage negotiators. All costs are being paid by California Association of Hostage Negotiators, and the travel will be at no cost to the City.

CC #: 8287

File #: 0600-02

CONTACT: Dee Dee Gunther 916-774-5015 ddgunther@roseville.ca.us

6.14. Out of State Travel Request - Economic Development Housing Division

Memo from Administrative Analyst Melissa Hagan and Economic Development Director Chris Robles with a request for Council to approve out-of-state travel for one Housing Analyst of the Housing Division of the Economic Development Department to attend a 2.5 day training for the federally-funded Community Development Block Grant (CDBG) program. This Housing and Urban Development-hosted training is free of charge and the associated cost of $1,375.00 to cover airfare, per diem, and lodging was approved in the FY2016-17 budget for the CDBG program.

CC #: 8302

File #: 0600-02

CONTACT: Melissa Hagan 916-774-5476 mhagan@roseville.ca.us

Ceremonial Documents

6.15. Proclamation - Child Abuse Prevention Month

Proclaim April 2017 as Child Abuse Prevention month and reaffirm dedication to protecting the children of the community, and call upon citizens to increase their participation in awareness of preventing child abuse.

CC #: 8295

File #: 0102-06

CONTACT: Heather Blanco 916-774-5265 hblanco@roseville.ca.us

6.16. Resolution of Commendation and Appreciation to Mike Bloom

Mike Bloom be commended for his outstanding service and dedication to the City of Roseville, congratulated for his many accomplishments, and wished a long, healthy, and enjoyable retirement.

CC #: 8296

File #: 0102-10

CONTACT: Heather Blanco 916-774-5265 hblanco@roseville.ca.us

6.17. Proclamation - Keaton Raphael Memorial St. Baldrick's Foundation

Proclaim March 4, 2017 as Keaton Raphael Memorial, St. Baldrick's Foundation Head Shaving Event and urge citizens to support organizations that offer assistance and services to children diagnosed with cancer, and their families.

CC #: 8305

File #: 0102-06

CONTACT: Heather Blanco 916-774-5265 hblanco@roseville.ca.us

6.18. Resolution of Commendation and Appreciation to Sheriff Edward N Bonner

Sheriff Edward N. Bonner be commended for his outstanding service and dedication to the City of Roseville and Placer County, congratulated for his many accomplishments, and wished a long, healthy, and enjoyable retirement.

CC #: 8306

File #: 0102-10

CONTACT: Heather Blanco 916-774-5265 hblanco@roseville.ca.us

END OF CONSENT CALENDAR

7. ORDINANCES

7.1. Community Facilities Districts True-Up to Levies - Budget Adjustment

Memo from Financial Analyst Vanessa Lieberman and Chief Financial Officer Jay Panzica recommending Council adopt ORDINANCE NO. 5809 OF THE COUNCIL OF THE CITY OF ROSEVILLE AUTHORIZING CERTAIN AMENDMENTS TO THE 2016-17 BUDGET AND DECLARING THIS ORDINANCE TO BE IMMEDIATELY EFFECTIVE AS AN APPROPRIATION MEASURE. The Finance Department does a yearly review of City budget numbers to those submitted to the County on the tax levies. This budget adjustment changes the City budgeted numbers to those collected on the tax bill. Each district has enough funds to cover these additional costs and there is no impact to the General Fund.

CC #: 8299

File #: 0206-03 & 0201-01

CONTACT: Vanessa Lieberman 916-774-5189 vlieberman@roseville.ca.us

8. SPECIAL REQUESTS/REPORTS/PRESENTATION

8.1. Midyear Performance Report

Memo from Budget Manager Kathy Cullen and Chief Financial Officer Jay Panzica with the Midyear Performance Report Fiscal Year 2016-17 providing financial information on the General Fund, major enterprise funds, and developer impact fees. This item is a performance report only and has no fiscal impact.

CC#: 8292

File#: 0202-02

CONTACT: Kathy Cullen 916-746-1306 kcullen@roseville.ca.us

9. COUNCIL / STAFF / REPORTS/ COMMENTS

10. ADJOURNMENT

COUNCIL COMMUNICATION

CC #: 8294
File #: 0900-04-01 & 0201-01

Title:	Roller Compacted Concrete Pilot Project - Award of Contract, Execution of Agreement and Budget Adjustment
Contact:	Noah Siviglia 916-746-1379 nsiviglia@roseville.ca.us

Meeting Date: 3/1/2017
Item #: 6.1.

RECOMMENDATION TO COUNCIL

Staff recommends that City Council award the Roller Compacted Concrete Pilot Project to lowest responsive bidder, Papich Construction Co., Inc., in the amount of $7,359,599.99 with authorization for staff to exceed the award amount by 10% ($735,960.00). A budget adjustment is necessary in the amount of $1,700,000.00 from the Highway Users Tax, $1,500,000.00 from Traffic Mitigation Fees, $4,850,000.00 from the Local Transportation Fund, and $350,000.00 from Gas Tax.

BACKGROUND

Staff is continuously looking for ways to maintain our streets in a cost effective manner. Traditional asphalt pavement requires regular maintenance at 7 to 10 year intervals. Gas tax revenues are not keeping up with the cost to maintain our roadways. This has caused staff to look for an alternative to traditional asphalt pavement that requires less maintenance. One pavement option proven to have reduced maintenance costs is Roller Compacted Concrete (RCC). RCC is installed with a paving machine similar to conventional asphalt. This results in similar or lower initial construction costs. In addition, RCC has a substantially reduced maintenance cost as compared to traditional asphalt pavement.

The arterial and collector street segments identified for this RCC pilot project include: Washington Boulevard from Pleasant Grove Boulevard to just south of Blue Oaks Boulevard; Atkinson Street from Church Street to the Foothills Boulevard overcrossing; and Denio Loop. Heavy usage of these roads by truck traffic has led to degradation of the structural section requiring complete reconstruction. This need provides an ideal opportunity to install RCC as a pilot project for Roseville. Additionally, Hickory Street from Church Street to Oakland Avenue has been included as a test of RCC's usefulness for residential streets. Staff conducted a survey of the adjacent residents and property owners and received support for the street's inclusion in the project.
Curb ramp upgrades within the project limits are also included to ensure that all curb ramps meet current ADA standards.

On June 1st, 2016, the City Council approved the plans and specifications for this project and authorized staff to call for bids. The two lowest bids received contained discrepancies and were therefore rejected by Council. Staff readvertised and the second bid opening was held on January 17th, 2017. A total of four bids were received ranging from $7,359,999.99 to $8,708,950.00. As with the first bid, all of the bids came in higher than our engineer's estimate of $6,930,000.00. To determine if RCC is still the most cost effective paving solution for this project, staff completed a cost analysis comparing the RCC bid costs to favorable Asphalt Concrete (AC) costs and found RCC to be less expensive than AC for comparative structural sections. The increased bid cost over the engineer's estimate is due to an improving economy resulting in higher construction costs overall. The engineer's estimate and the three lowest bids are as follows:

	Bid Results
Engineer's Estimate	**$6,930,000.00**
Papich Construction Co, Inc.	**$7,359,599.99**
A. Teichert & Son, Inc. dba Teichert Construction	**$7,413,700.00**
Granite Construction Company	**$7,529,695.00**

Staff has reviewed the bid from Papich Construction Co. and found their bid to be complete and in order. We anticipate construction to begin in April and be completed by late September of this year.

PUBLIC OUTREACH: Previous public outreach has included two separate group meetings with utility companies, a presentation and discussion at the North State Building Industry Association, a public meeting for the residents on Hickory Street, a presentation to the City's Transportation Commission, and a presentation before the City Council. The RCC pilot project has received support at all of those meetings.

As the project moves forward to construction, staff will be working with our communication team to develop a public outreach campaign to keep the community informed of the project's progress and traffic impacts during the construction phase of the project. This includes disseminating the latest project information on the City's web page and through news stories, traffic alerts, and social media. About two weeks before the planned work, Changeable Message Signs (CMS) will be placed at various locations throughout the project area to notify the traveling public about the project, its start and end times, road closures and detours for Atkinson and Hickory Street (Washington Blvd. will remain open during construction), and any potential traffic impacts expected with the work. The majority of the work will take place during regular business hours with occasional night work. Staff will also send letters to residents and businesses adjacent to the project area explaining the planned work, the type of pavement treatment that will be used, and what the recipients can expect before, during, and after the project.

During construction, staff will also be reaching out to the development, utility, and construction communities inviting them to observe the project as it is being built. This will provide an opportunity for interested parties to learn more about RCC. Staff will subsequently solicit input from these entities as we evaluate the success of the pilot project and determine its future potential for use within the City of Roseville.

FISCAL IMPACT

This project funded by $1,700,000 from the Highway Users Tax (HUT), $1,500,000 from Traffic Mitigation Funds (TMF), $350,000 in Gas Tax, and $4,850,000 from the Local Transportation Fund (LTF). The requested budget adjustment in the total amount of $8,400,000 will cover the construction contract, construction contingency, materials testing, inspection and project management. No General Funds are allocated for this project.

ECONOMIC DEVELOPMENT / JOBS CREATED

Federal guidelines suggest that there is one job created for every $92,000.00 in direct government spending. Based on that figure, this project will create 80 jobs.

ENVIRONMENTAL REVIEW

The proposed project involves the minor alteration of an existing facility. This activity is categorically exempt from CEQA as a Class 1 Exemption (State CEQA Guidelines Section 15301). The Exemption has been prepared and no further CEQA action is required.

Respectfully Submitted,

Noah Siviglia, Assistant Engineer

Rhon Herndon, Public Works Director

_____

Rob Jensen, City Manager

ATTACHMENTS:

Description

Resolution No. 17-79

Agreement

Project Location Map

Ordinance No. 5806

Budget Adjustment

RESOLUTION NO. 17-79

APPROVING AN AGREEMENT BETWEEN CITY OF ROSEVILLE AND PAPICH CONSTRUCTION CO., INC, AND AUTHORIZING THE CITY MANAGER TO EXECUTE IT ON BEHALF OF THE CITY OF ROSEVILLE

WHEREAS, an agreement between City of Roseville and Papich Construction Co., Inc, for the Roller Compacted Concrete Pilot project, has been reviewed by the City Council; and

NOW, THEREFORE, BE IT RESOLVED by the Council of the City of Roseville that said agreement is hereby approved and that the City Manager is authorized to execute it on behalf of the City of Roseville; and

BE IT FURTHER RESOLVED that the Public Works Director or his designee is authorized to approve change orders for the project, consistent with the contract terms, provided that the net cost of all change orders shall not exceed ten percent (10%) of the contract price.

PASSED AND ADOPTED by the Council of the City of Roseville this ___ day of _____, 20__, by the following vote on roll call:

AYES COUNCILMEMBERS:

NOES COUNCILMEMBERS:

ABSENT COUNCILMEMBERS:

_____
MAYOR

ATTEST:

_____
City Clerk

A G R E E M E N T

THIS AGREEMENT, is made and entered into this ___day of _____, 2017, by and between the City of Roseville, a municipal corporation, ("CITY"), and Papich Construction Co., Inc., a Corporation, ("CONTRACTOR"),

W I T N E S S E T H:

WHEREAS, the City Council of the CITY, at a meeting held on the 1st day of June, 2016 approved plans and specifications for the Roller Compacted Concrete Pilot Project

and directed the City Clerk to advertise for sealed proposals for doing said work and providing that bids be submitted on the 17th day of January, 2017, and

WHEREAS, the City Clerk, thereafter duly and regularly caused a notice to be published in the manner and for the time prescribed by law, and

WHEREAS, CONTRACTOR, pursuant to the provisions of said notice duly filed a bid with the City Clerk, a true copy of which bid is now on file in the office of the City Clerk, and is hereby referred to and by this reference made a part hereof as fully as if set forth at length herein, and

WHEREAS, all bids received pursuant to said notice were opened and examined and publicly declared at the time specified in said advertisement for bids and at a meeting of the City Council held on the 1st day of March, 2017, the Council found and declared the bid of CONTRACTOR to be the lowest responsible bid and thereupon awarded a contract to CONTRACTOR to do the work referred to in the aforementioned specifications,

NOW, THEREFORE, the parties agree as follows:

1. THE WORK. CONTRACTOR agrees:

a. To do the work and furnish all the labor, materials, tools, equipment and insurance required for the Roller Compacted Concrete Pilot Project

in accordance with the Contract Documents (the work).

b. To do and perform the Work contemplated hereby in a good and workmanlike manner under the direction of and to the satisfaction of the Director of Public Works of the City of Roseville.

2. PAYMENT. CITY shall pay CONTRACTOR $ 7,359,599.99 for the Work.

3. CONTRACT DOCUMENTS. The complete Agreement between the parties hereto consists of the following documents:

a. The advertisement for bids (including the notice to bidders, instructions to bidders and proposals);

b. The accepted bid;

c. Plans and specifications (including standard construction specifications, special provisions and construction details);

d. Bonds and insurance required by the specifications; and

e. This contract.

All documents specified above are intended to operate so that any work called for in any one and not mentioned in the other, or vice versa, is to be executed the same as if mentioned in all said documents.

4. LIQUIDATED DAMAGES. In the event CONTRACTOR does not complete the work within the time specified, CONTRACTOR agrees that CITY will suffer damages. Inasmuch as the actual damages which would result from such breach by CONTRACTOR

under this Agreement are uncertain, and would be impractical or extremely difficult to fix, CONTRACTOR agrees that it shall pay, or CITY shall deduct from CONTRACTOR's fee, the amount of $7,400.00 per day as liquidated damages, in the event of such delay.

5. TIME OF ESSENCE. Time is of the essence of this Agreement.

6. ATTORNEY'S FEES; VENUE; GOVERNING LAW. If either party commences any legal action against the other party arising out of this Agreement or the performance thereof, the prevailing party in such action shall be entitled to recover its reasonable litigation expenses, including but not limited to, court costs, expert witness fees, discovery expenses, and attorneys' fees. Any action arising out of this Agreement shall be brought in Placer County, California, regardless of where else venue may lie. This Agreement shall be governed by and construed in accordance with the laws of the State of California.

7. INDEPENDENT CONTRACTOR. CONTRACTOR shall act as an independent contractor, and covenants and agrees that it will conduct itself consistent with such status, that it will neither hold itself out as, nor claim to be, an officer or employee of CITY by reason of this Agreement.

8. SUCCESSORS IN INTEREST. This Agreement shall be binding upon the heirs, successors, executors, administrators and assigns of the respective parties hereto.

9. MODIFICATION. This Agreement and each provision contained herein may be waived, amended, supplemented or eliminated only by mutual written agreement of the parties.

10. SEVERABILITY. If any of the provisions contained in this Agreement are for any reason held invalid or unenforceable, such holding shall not affect the remaining provisions or the validity and enforceability of the Agreement as a whole.

11. INTEGRATED AGREEMENT. This is an integrated agreement and contains all of the terms, considerations, understanding and promises of the parties. It shall be read as a whole.

IN WITNESS WHEREOF, the City of Roseville, a municipal corporation, has authorized the execution of this Agreement in duplicate by its City Manager and attestation by its City Clerk under authority of Resolution No. _____, adopted by the Council of the City of Roseville on the ____day of _____, 20___, and CONTRACTOR has caused this Agreement to be duly executed.

CITY OF ROSEVILLE,
a municipal corporation

By: _____
ROB JENSEN
City Manager

ATTEST:

By: _____
SONIA OROZCO
City Clerk

APPROVED AS TO FORM:

By: _____
ROBERT R. SCHMITT
City Attorney

CONTRACTOR:

By: _____
its: President, JASON PAPICH

AND

By: _____
its: President, Jason Papich

Business License #: 00835437
Contractors License-
767055

AGREEMENT

THIS AGREEMENT, is made and entered into this ___day of _____, 2017, by and between the City of Roseville, a municipal corporation, ("CITY"), and Papich Construction Co., Inc., a Corporation, ("CONTRACTOR"),

WITNESSETH:

WHEREAS, the City Council of the CITY, at a meeting held on the 1st day of June, 2016 approved plans and specifications for the Roller Compacted Concrete Pilot Project

and directed the City Clerk to advertise for sealed proposals for doing said work and providing that bids be submitted on the 17th day of January, 2017, and

WHEREAS, the City Clerk, thereafter duly and regularly caused a notice to be published in the manner and for the time prescribed by law, and

WHEREAS, CONTRACTOR, pursuant to the provisions of said notice duly filed a bid with the City Clerk, a true copy of which bid is now on file in the office of the City Clerk, and is hereby referred to and by this reference made a part hereof as fully as if set forth at length herein, and

WHEREAS, all bids received pursuant to said notice were opened and examined and publicly declared at the time specified in said advertisement for bids and at a meeting of the City Council held on the 1st day of March, 2017, the Council found and declared the bid of CONTRACTOR to be the lowest responsible bid and thereupon awarded a contract to CONTRACTOR to do the work referred to in the aforementioned specifications,

NOW, THEREFORE, the parties agree as follows:

1. THE WORK. CONTRACTOR agrees:

a. To do the work and furnish all the labor, materials, tools, equipment and insurance required for the Roller Compacted Concrete Pilot Project

in accordance with the Contract Documents (the work).

b. To do and perform the Work contemplated hereby in a good and workmanlike manner under the direction of and to the satisfaction of the Director of Public Works of the City of Roseville.

2. PAYMENT. CITY shall pay CONTRACTOR $ 7,359,599.99 for the Work.

3. CONTRACT DOCUMENTS. The complete Agreement between the parties hereto consists of the following documents:

a. The advertisement for bids (including the notice to bidders, instructions to bidders and proposals);

b. The accepted bid;

c. Plans and specifications (including standard construction specifications, special provisions and construction details);

d. Bonds and insurance required by the specifications; and

e. This contract.

All documents specified above are intended to operate so that any work called for in any one and not mentioned in the other, or vice versa, is to be executed the same as if mentioned in all said documents.

4. LIQUIDATED DAMAGES. In the event CONTRACTOR does not complete the work within the time specified, CONTRACTOR agrees that CITY will suffer damages. Inasmuch as the actual damages which would result from such breach by CONTRACTOR

under this Agreement are uncertain, and would be impractical or extremely difficult to fix, CONTRACTOR agrees that it shall pay, or CITY shall deduct from CONTRACTOR's fee, the amount of $ 7,400.00 per day as liquidated damages, in the event of such delay.

5. TIME OF ESSENCE. Time is of the essence of this Agreement.

6. ATTORNEY'S FEES; VENUE; GOVERNING LAW. If either party commences any legal action against the other party arising out of this Agreement or the performance thereof, the prevailing party in such action shall be entitled to recover its reasonable litigation expenses, including but not limited to, court costs, expert witness fees, discovery expenses, and attorneys' fees. Any action arising out of this Agreement shall be brought in Placer County, California, regardless of where else venue may lie. This Agreement shall be governed by and construed in accordance with the laws of the State of California.

7. INDEPENDENT CONTRACTOR. CONTRACTOR shall act as an independent contractor, and covenants and agrees that it will conduct itself consistent with such status, that it will neither hold itself out as, nor claim to be, an officer or employee of CITY by reason of this Agreement.

8. SUCCESSORS IN INTEREST. This Agreement shall be binding upon the heirs, successors, executors, administrators and assigns of the respective parties hereto.

9. MODIFICATION. This Agreement and each provision contained herein may be waived, amended, supplemented or eliminated only by mutual written agreement of the parties.

10. SEVERABILITY. If any of the provisions contained in this Agreement are for any reason held invalid or unenforceable, such holding shall not affect the remaining provisions or the validity and enforceability of the Agreement as a whole.

11. INTEGRATED AGREEMENT. This is an integrated agreement and contains all of the terms, considerations, understanding and promises of the parties. It shall be read as a whole.

IN WITNESS WHEREOF, the City of Roseville, a municipal corporation, has authorized the execution of this Agreement in duplicate by its City Manager and attestation by its City Clerk under authority of Resolution No. _____, adopted by the Council of the City of Roseville on the ____day of _____, 20___, and CONTRACTOR has caused this Agreement to be duly executed.

CITY OF ROSEVILLE,
a municipal corporation

By: _____
ROB JENSEN
City Manager

ATTEST:

By: _____
SONIA OROZCO
City Clerk

APPROVED AS TO FORM:

By: _____
ROBERT R. SCHMITT
City Attorney

CONTRACTOR:

By: _____
its: President, Jason Papich

AND

By: _____
its: President, JASON PAPICH

Business License #: 00835437
Contractors License - 767055

2016 Roller Compacted Concrete Project

PW - Engineering

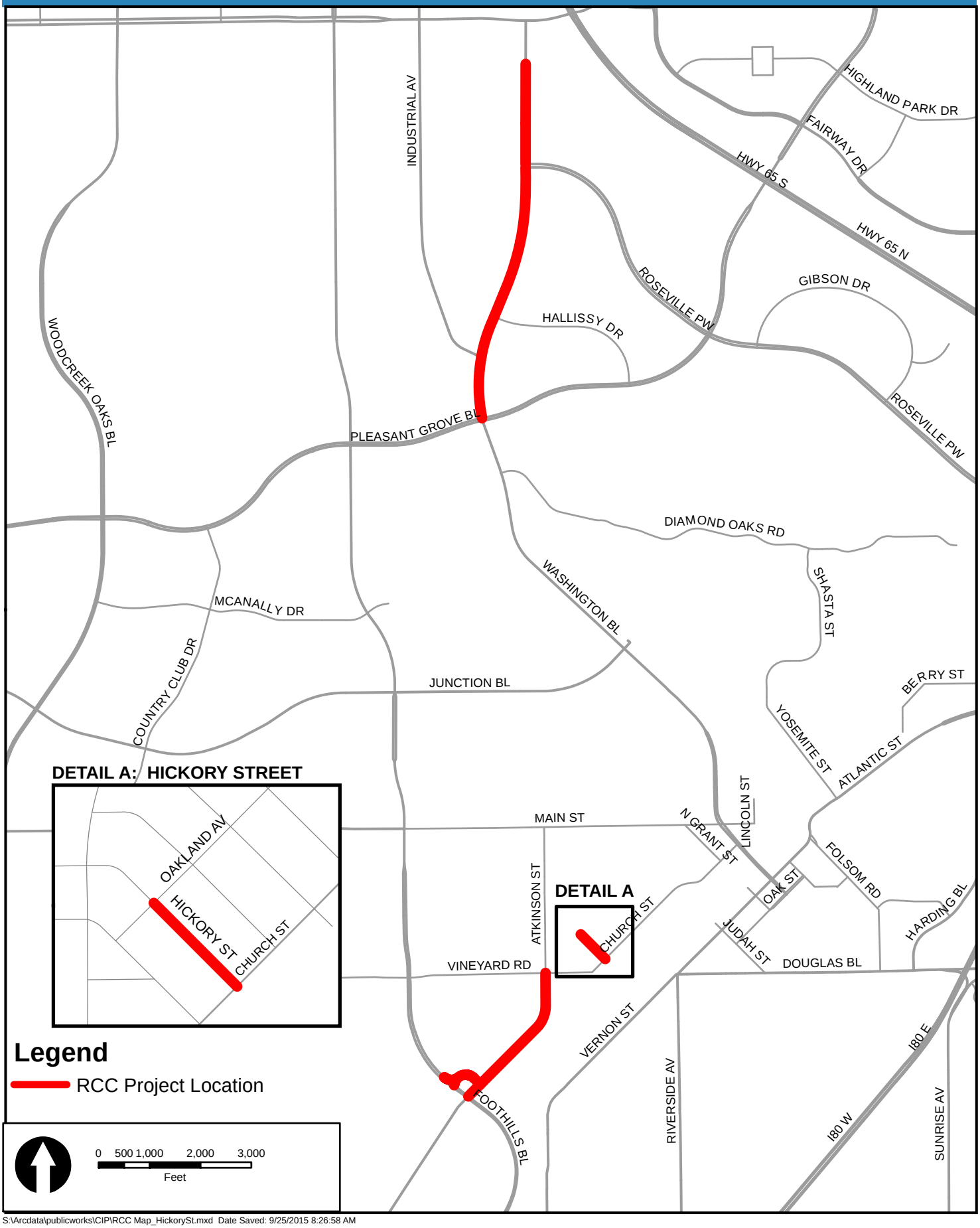

S:\Arcdata\publicworks\CIP\RCC Map_HickorySt.mxd Date Saved: 9/25/2015 8:26:58 AM

ORDINANCE NO. 5806

ORDINANCE OF THE COUNCIL OF THE CITY OF ROSEVILLE AUTHORIZING CERTAIN AMENDMENTS TO THE 2016-17 BUDGET AND DECLARING THIS ORDINANCE TO BE IMMEDIATELY EFFECTIVE AS AN APPROPRIATION MEASURE

THE CITY OF ROSEVILLE ORDAINS:

SECTION 1. The City of Roseville Annual Budget, Fiscal Year 2016-17, is hereby amended by transferring appropriation to and from the activities indicated below:

Appropriate funds for the Roller Compacted Concrete Pilot project per request of the Public Works Department, as listed on the attached Request for Budget Adjustment totaling $16,800,000.00

SECTION 2. This ordinance is hereby declared to be an appropriation measure, immediately effective pursuant to the provisions of Section 5.03 of the Charter.

SECTION 3. The City Clerk is hereby authorized and directed to post a true copy of the foregoing ordinance in each of three (3) conspicuous locations in the City and she shall immediately after such posting enter in the ordinance book, under the record of the ordinance, a certificate under her hand stating the time and place of such publication by posting.

PASSED AND ADOPTED by the Council of the City of Roseville, this _____ day of _____, 20__, by the following vote on roll call:

AYES COUNCILMEMBERS:

NOES COUNCILMEMBERS:

ABSENT COUNCILMEMBERS:

_____
MAYOR

ATTEST:

_____
City Clerk

CITY OF ROSEVILLE CALIFORNIA

REQUEST FOR BUDGET ADJUSTMENT
FINANCE DEPARTMENT

Instructions: Complete all necessary fields. Fields marked with an asterisk (*) are mandatory and required for processing. Obtain required approvals and process according to the procedure outlined in:
A.R. 6.01 Budget Adjustment Policy & Procedure.

For more detailed budget adjustment training information, including examples, please click on the following link:
Miscellaneous Budget Training Information.

REQUESTER*: Noah Siviglia

DEPARTMENT/DIVISION*: Public Works / Engineering

FISCAL YEAR/EFFECTIVE DATE*: FY17 / 3/1/2017

PROPOSED COUNCIL DATE (if applicable): 03/01/2017

USE OF FUNDS*

AMOUNT*	ACCOUNT NUMBER GL ORG KEY*	GL OBJECT*	GL FUND*	JL PROJECT	JL ACTIVITY	Account Title/Activity Description*
350,000	20010	6130	253	172503	45	Resurfacing project funded by Gas Tax
1,700,000	20010	6130	253	172503	45	Resurfacing project funded by HUT
1,500,000	20010	6130	253	172503	45	Resurfacing project funded by TMF
4,850,000	20010	6130	253	172503	45	Resurfacing project funded by LTF
350,000	00253	3902	253	172503		Transfer in from Gas Tax
1,700,000	00253	3902	253	172503		Transfer in from HUT
1,500,000	00253	3902	253	172503		Transfer in from TMF
4,850,000	00253	3902	253	172503		Transfer in from LTF
$ 16,800,000	TOTAL					

SOURCE OF FUNDS*

AMOUNT*	ACCOUNT NUMBER GL ORG KEY	GL OBJECT	GL FUND*	JL PROJECT	JL ACTIVITY	Account Title/Activity Description*
350,000			201			Gas tax fund balance
1,700,000			252			HUT Fund balance
1,500,000			221			TMF Fund balance
4,850,000			441			Local Transportation Fund fund balance
350,000	00201	8902	201	172503		Transfer out to Roadway Fund
1,700,000	00250	8902	250	172503		Transfer out to Roadway Fund
1,500,000	00221	8902	221	172503		Transfer out to Roadway Fund
4,850,000	00441	8902	441	172503		Transfer out to Roadway Fund
$ 16,800,000	TOTAL					

FINANCE USE

Approved: Kathy Cullen 2/8/17
BUDGET MANAGER/DESIGNEE DATE

Finance Director: Date

Justification for Budget Adjustment*:

This budget adjustment will supply budget for the construction contract, construction contingency, material testing, inspection and project management. The project is in the Roadway fund and is funded with transfers in from Gas Tax, HUT, TMF and LTF.

Approved: 2-8-2017
REQUESTING DEPARTMENT HEAD / DESIGNEE DATE

Approved:
CITY MANAGER DATE

Revised 6/2016

CITY OF ROSEVILLE CALIFORNIA

REQUEST FOR BUDGET ADJUSTMENT

FINANCE DEPARTMENT

Instructions: Complete all necessary fields. Fields marked with an asterisk (*) are mandatory and required for processing. Obtain required approvals and process according to the procedure outlined in:
A.R. 6.01 Budget Adjustment Policy & Procedure.

For more detailed budget adjustment training information, including examples, please click on the following link:
Miscellaneous Budget Training Information.

REQUESTER*: Noah Siviglia

DEPARTMENT/DIVISION*: Public Works / Engineering

FISCAL YEAR/EFFECTIVE DATE*: FY17 / 3/1/2017

PROPOSED COUNCIL DATE (if applicable): 03/01/2017

USE OF FUNDS*

AMOUNT*	ACCOUNT NUMBER GL ORG KEY*	GL OBJECT*	GL FUND*	JL PROJECT	JL ACTIVITY	Account Title/Activity Description*
350,000	20010	6130	253	172503	45	Resurfacing project funded by Gas Tax
1,700,000	20010	6130	253	172503	45	Resurfacing project funded by HUT
1,500,000	20010	6130	253	172503	45	Resurfacing project funded by TMF
4,850,000	20010	6130	253	172503	45	Resurfacing project funded by LTF
350,000	00253	3902	253	172503		Transfer in from Gas Tax
1,700,000	00253	3902	253	172503		Transfer in from HUT
1,500,000	00253	3902	253	172503		Transfer in from TMF
4,850,000	00253	3902	253	172503		Transfer in from LTF
$ 16,800,000	TOTAL					

SOURCE OF FUNDS*

AMOUNT*	ACCOUNT NUMBER GL ORG KEY	GL OBJECT	GL FUND*	JL PROJECT	JL ACTIVITY	Account Title/Activity Description*
350,000			201			Gas tax fund balance
1,700,000			252			HUT Fund balance
1,500,000			221			TMF Fund balance
4,850,000			441			Local Transportation Fund fund balance
350,000	00201	8902	201	172503		Transfer out to Roadway Fund
1,700,000	00250	8902	250	172503		Transfer out to Roadway Fund
1,500,000	00221	8902	221	172503		Transfer out to Roadway Fund
4,850,000	00441	8902	441	172503		Transfer out to Roadway Fund
$ 16,800,000	TOTAL					

FINANCE USE

Approved: Kathy Cullen 2/8/17
BUDGET MANAGER/DESIGNEE DATE

Finance Director: Marty Hanel Date

Justification for Budget Adjustment*:

This budget adjustment will supply budget for the construction contract, construction contingency, material testing, inspection and project management. The project is in the Roadway fund and is funded with transfers in from Gas Tax, HUT, TMF and LTF.

Approved: 2-8-2017
REQUESTING DEPARTMENT HEAD / DESIGNEE DATE

Approved:
CITY MANAGER DATE

Revised 6/2016

COUNCIL COMMUNICATION

CC #: 8288
File #: 0203-13

Title: Toyota Gas Powered Forklift (RFQ 01-3122) - Purchase Order
Contact: Tiffany Valdez 916-774-5708 tvaldez@roseville.ca.us

Meeting Date: 3/1/2017
Item #: 6.2.

RECOMMENDATION TO COUNCIL

Recommend Council authorize a purchase order to Toyota Material Handling as the lowest responsive bidder for RFQ 01-3122 for one gas powered Toyota Forklift to replace vehicle number 90-699. The total cost of the forklift including tax and options is $29,758.00. Funding for this vehicle is included in the FY2016-17 Auto Replacement Budget.

BACKGROUND

The Public Works Traffic Signal Maintenance Division is purchasing a new forklift for the replacement of vehicle 90-699. The Traffic Signal Maintenance Division maintains a facilities and materials warehouse with traffic signal supplies. The forklift is used for the materials handling of heavy and bulky stock items that cannot be moved by hand or with a hand truck.

A formal bid was issued with two vendors responding as follows:

Vendor	**Total**
Toyota Material Handling West Sacramento, CA	**$28,669.00**
Valley Forklift West Sacramento, CA	$22,738.07

The bid from Valley Forklift was deemed nonresponsive because the weight lifting capacity of their forklift did not meet the bid specifications.

Vehicle replacements are based on the Fleet Scoring System which considers factors such as age, miles, reliability, prior maintenance and repair costs, and current condition. Below is the vehicle replacement score:

Vehicle ID	Replacement Score	Vehicle Condition
90-699	38	Meets City replacement criteria

FISCAL IMPACT

The total cost of the forklift including tax and options is $29,758.00. Funding for this vehicle is included in the FY2016-17 Auto Replacement Budget.

ECONOMIC DEVELOPMENT / JOBS CREATED

Not applicable.

ENVIRONMENTAL REVIEW

The California Environmental Quality Act (CEQA) does not apply to activities that will not result in a direct or reasonably foreseeable indirect physical change in the environment (CEQA Guidelines §15061(b)(3). The purchase of a forklift does not include the potential for a significant environmental effect, and therefore is not subject to CEQA.

Respectfully Submitted,

Tiffany Valdez, Buyer

Paul Diefenbach, Central Services Director

_____
Rob Jensen, City Manager

ATTACHMENTS:
Description

COUNCIL COMMUNICATION

CC #: 8300
File #: 0800-03

Title: AB 2021 Energy Efficiency Targets
Contact: Renee Laffey 916-774-5671 rlaffey@roseville.ca.us

Meeting Date: 3/1/2017
Item #: 6.3.

RECOMMENDATION TO COUNCIL

Recommend City Council adopt a resolution approving Roseville Electric Utility's energy efficiency targets for the next 10 year period as required by California Assembly Bill (AB) 2021. There is no financial impact from the approval of the 10 year energy efficiency targets.

BACKGROUND

California AB 2021, as modified under AB 2227, requires publicly-owned utilities to identify all potentially achievable, cost effective, reliable and feasible energy efficiency savings opportunities, and establish 10 year targets for energy efficiency savings every four years.

Through the collection of a mandated public benefits charge to its customers, Roseville Electric Utility funds various customer energy efficiency programs, as well as other demand side management programs, investment in renewable energy, research, development and demonstration projects, along with services for low income customers. Revenues from the electric utility's public benefit charge are used to support the programs directly in Roseville, and the savings from the energy efficiency programs are required to be reported annually to the California Energy Commission (CEC). These programs are an important element in helping customers reduce their electricity costs and are key to help the utility achieve its energy efficiency targets and related regulatory requirements.

The 10 year targets required by AB 2021 are reflected as a percentage of Roseville Electric Utility's forecasted energy sales, along with the associated amount of energy (shown in megawatt-hours). The utility's previous 10 year targets were approved by City Council in 2007, 2010 and 2013. To comply with AB 2021, Roseville Electric Utility, along with other members of the California Municipal Utilities Association (CMUA) worked with a consultant to develop the energy efficiency targets for the publically-owned utilities in California. Roseville Electric Utility also worked with the consultant to model the potential for energy efficiency specifically in Roseville based on the unique building, economic, demographic, technological, and climate characteristics for the city.

For Roseville Electric Utility, the 10 year targets required by AB 2021 must be approved by the

City Council. Upon approval by City Council, the utility will report the 10 year targets to the CEC.

Annual Energy Efficiency Targets 2018 – 2027

The recommended 10 year targets (2018 - 2027) for Roseville Electric Utility are shown in the following table.

Year	2018	2019	2020	2021	2022	2023	2024	2025	2026	2027
MWH	8,413	8,549	8,995	9,578	10,063	10,000	9,275	8,556	7,977	7,895
Goal as a % of Energy Sold	.71	.72	.76	.81	.85	.85	.80	.74	.70	.70

The average energy efficiency savings projected over the next 10 year period is 8,930 megawatt-hours annually, representing .76 percent of Roseville Electric Utility's forecasted energy sales. This is an approximate 15 percent increase over the previously approved targets.
Roseville Electric Utility's average performance for the past three years was .86 percent of energy sales, exceeding the previous target of .64 percent. The results were primarily due to the rapid adoption of interior and exterior LED technology retrofits in FY 2015, 2016 and 2017 and the implementation of the Home Energy Reports residential behavior program in 2015.
Currently, California's Title 24 building codes significantly influence energy efficiency retrofit savings that are eligible to apply towards meeting the AB 2021 targets. Title 24 also sets the direction to achieve net zero energy in new homes after 2020. At this time it is unclear how Title 24 will be revised to achieve the "net zero home" or what impact this will have on reportable energy efficiency savings for meeting the AB 2021 targets.
Roseville Electric Utility recommends City Council approval of the updated 10 year energy efficiency targets.

FISCAL IMPACT

There is no financial impact from the approval of the 10 year energy efficiency targets.

ECONOMIC DEVELOPMENT / JOBS CREATED

The establishment of these goals support energy efficiency projects in Roseville. Energy efficiency projects for residential and commercial customers have potential to create jobs and stimulate economic development.

ENVIRONMENTAL REVIEW

The California Environmental Quality Act (CEQA) does not apply to activities that will not result in a direct or reasonably foreseeable indirect physical change in the environment (CEQA Guidelines §15061(b)(3). The AB 2021 Efficiency Targets project does not include the potential for a significant environmental effect, and therefore is not subject to CEQA.

Respectfully Submitted,

Renee Laffey, Electric Business Analyst

Michelle Bertolino, Electric Utility Director

_____

Rob Jensen, City Manager

ATTACHMENTS:

Description

Resolution No. 17-82

RESOLUTION NO. 17-82

APPROVING ROSEVILLE ELECTRIC UTILITY'S ENERGY EFFICIENCY TARGETS

WHEREAS, AB 2021 requires each local publicly-owned utility to establish annual targets for energy reductions for their customers for the next ten-year period; and

WHEREAS, to comply with AB 2021, the City Council must adopt updated annual targets and report them to the California Energy Commission by June 1 of every third year;

WHEREAS, staff recommends the following Roseville Electric Utility's Energy Efficiency Targets for 2018 through 2027:

Year	**2018**	**2019**	**2020**	**2021**	**2022**	**2023**	**2024**	**2025**	**2026**	**2027**
MWH	8,413	8,549	8,995	9,578	10,063	10,000	9,275	8,556	7,977	7,895
Goal as a % of Energy Sold	.71	.72	.76	.81	.85	.85	.80	.74	.70	.70

NOW, THEREFORE, BE IT RESOLVED that the City Council of the City of Roseville hereby approves Roseville Electric Utility's Energy Efficiency Targets for 2018 through 2027.

PASSED AND ADOPTED by the Council of the City of Roseville this ___ day of _____, 20__, by the following vote on roll call:

AYES COUNCILMEMBERS:

NOES COUNCILMEMBERS:

ABSENT COUNCILMEMBERS:

_____
MAYOR

ATTEST:

_____
City Clerk

COUNCIL COMMUNICATION

CC #: 8303
File #: 0800-02

Title: Water System Interconnection Agreement
Contact: Jim Mulligan 916-774-5668 jmulligan@roseville.ca.us

Meeting Date: 3/1/2017
Item #: 6.4.

RECOMMENDATION TO COUNCIL

Staff recommends that City Council approve the attached resolution authorizing the City Manager to execute the "Interconnection Agreement Between Citrus Heights Water District and the City of Roseville."

BACKGROUND

The City maintains physical interconnections with the potable water distribution piping of multiple water agencies bordering the City. The normally-closed interconnections with Placer County Water Agency, California American Water, San Juan Water District and Citrus Heights Water District can be opened to allow rapid response in case of emergency. These backup water supply points increase the City's water system reliability and provide operational flexibility. The City has maintained two
interconnections with CHWD for many years.

The Interconnection Agreement will memorialize in writing the relationship between the City and CHWD to coordinate their efforts in the operation and maintenance (O&M) and upgrade of the two existing interconnection facilities and the design, construction and O&M of two future interconnections. The agreement also defines the price of delivered water and how the cost of capital improvements are shared.

FISCAL IMPACT

The Interconnection Agreement is for treated water to be used in emergencies. There are no costs associated with the action of signing this agreement. At such time as the City and CHWD agree upon the design, construction, cost and implementation schedule of upgrades and future connections, the City will advance payment for the work and CHWD will reimburse the City for their share.

ECONOMIC DEVELOPMENT / JOBS CREATED

In accordance with the SRRI Stimulus Calculation Tool, no jobs will be created by signing the Interconnection Agreement.

ENVIRONMENTAL REVIEW

The Interconnection Agreement is not considered a “project” as defined by the California Environmental Quality Act (CEQA) (CEQA Guidelines §15378). Consequently no CEQA action is required.

Respectfully Submitted,

Jim Mulligan, Water Utility Manager

Richard Plecker, Environmental Utilities Director

_____

Rob Jensen, City Manager

ATTACHMENTS:

Description

Resolution No. 17-84

Interconnect Agreement

RESOLUTION NO. 17-84

APPROVING AN INTERCONNECTION AGREEMENT BETWEEN CITRUS HEIGHTS WATER DISTRICT AND THE CITY OF ROSEVILLE, AND AUTHORIZING THE CITY MANAGER TO EXECUTE IT ON BEHALF OF THE CITY OF ROSEVILLE

WHEREAS, an interconnection agreement between Citrus Heights Water District and the City of Roseville, pertaining to water systems, has been reviewed by the City Council; and

NOW, THEREFORE, BE IT RESOLVED by the Council of the City of Roseville that said agreement is hereby approved and that the City Manager is authorized to execute it on behalf of the City of Roseville; and

PASSED AND ADOPTED by the Council of the City of Roseville this ___ day of _____, 20__, by the following vote on roll call:

AYES COUNCILMEMBERS:

NOES COUNCILMEMBERS:

ABSENT COUNCILMEMBERS:

_____
MAYOR

ATTEST:

_____
City Clerk

INTERCONNECTION AGREEMENT
BETWEEN CITRUS HEIGHTS WATER DISTRICT
AND THE CITY OF ROSEVILLE

This Agreement ("Agreement") is entered into as of the ____ day of _____, 2017, by and between the Citrus Heights Water District, an irrigation district organized and existing under and pursuant to Division 11 of the Water Code of the State of California and the City of Roseville, a municipal corporation, hereinafter referred to respectively as "DISTRICT" and "CITY" and referred to collectively as "PARTIES".

RECITALS

WHEREAS, interconnecting water systems provide emergency and backup water supplies for water supply and water quality reliabilities, and

WHEREAS, the CITY and the DISTRICT currently do not have an agreement relating to interconnecting their water systems, maintenance and operation of the interconnections, and the costs of the water supply, and

WHEREAS, the CITY and the DISTRICT currently have two existing water system interconnections in Roseville: (1) Orlando Avenue east of Louis Lane, and (2) Blossom Hill Way south of Sandringham Way, and

WHEREAS, the PARTIES have identified two additional locations in Roseville to construct future interconnections: (1) Crestmont Avenue south of Vista Creek Drive and (2)Fair Way south of Kensington Drive , and

WHEREAS, Attachment A, attached hereto and incorporated herein by this reference, further describes in detail the various water system interconnection points and any related facilities that are to be the subject of this Agreement; and

WHEREAS, through this Agreement, the CITY and the DISTRICT now intend (1) to memorialize in writing the understanding of the present relationship of the PARTIES, (2) to coordinate their efforts in design, construction, operation, and maintenance of such interconnection facilities, and (3) to allocate costs to be expended in administering the efforts of each PARTY.

NOW, THEREFORE, IN CONSIDERATION OF THE MUTUAL OBLIGATIONS SET FORTH HEREIN, THE PARTIES AGREE AS FOLLOWS:

1. INCORPORATION OF RECITALS. The foregoing recitals are hereby incorporated by reference.

2. DEFINITIONS. When used in this Agreement, the following terms shall have the meanings hereinafter set forth:

(a) "Emergency" shall mean any conditions that will result in either of the PARTIES being short either treated or raw water. Conditions that may constitute an emergency include, but are not limited to, facility failure, drought conditions, contractual cutbacks of water supplies, or water quality failures. If in an emergency one party needs water in addition to its available water capacity, and the other party can make such additional water available to the first PARTY during the emergency without jeopardizing the second PARTY'S other customers, the second PARTY may offer such water to the first PARTY. Water made available is at the sole discretion of the providing PARTY.

(b) "Maintenance" is the regular/predicted exercising, flushing and/or minor repairs of the interconnections.

(c) "Net Delivery" is defined as the difference between (A) the total volume of treated water delivered by the DISTRICT to the CITY under this Agreement from all delivery points combined over a given calendar year and (B) the total volume delivered by the CITY to the DISTRICT from all delivery points combined over the same period.

(c) "Party Representative" means the person (and alternates) designated from time to time by the governing body of the DISTRICT or the CITY, that is authorized to take

actions under the Agreement to the extent permitted by the governing body.

(d) "Year" shall mean the twelve-month period from January 1 through December 31, both dates inclusive.

3. AREAS SERVED. Water delivered to the DISTRICT pursuant to this Agreement shall not be sold or otherwise disposed of by the DISTRICT for use outside of the DISTRICT'S water service area. Water delivered to the CITY pursuant to this Agreement shall not be sold or otherwise disposed of by the CITY for use outside of the CITY'S water service area.

4. INTERCONNECTIONS. Several water delivery points have been established, which connect the CITY and the DISTRICT systems. The intent of this Section is to identify these points of delivery, the function of each interconnection, and the relationships between them. The following existing and proposed interconnections, (a) through (d), are also shown on Attachment A.

(a) The Orlando Avenue Interconnection. This existing interconnection is capable of providing water from the CITY'S water system into the DISTRICT'S water system and from the DISTRICT'S water system to the CITY'S water system in the event of an emergency or maintenance outage situation.

(b) The Blossom Hill Way Interconnection. This existing interconnection is capable of providing water from the CITY'S water system into the DISTRICT'S water system and from the DISTRICT'S water system to the CITY'S water system in the event of an emergency or maintenance outage situation.

(c) The Crestmont Avenue Interconnection. This proposed interconnection is currently under design and yet to be constructed. This connection will be capable of providing water from the CITY'S water system into the DISTRICT'S water system and from the DISTRICT'S water system to the CITY'S water system in the event of an emergency or maintenance outage situation.

(d) The Fair Way Interconnection. This proposed interconnection is currently under design and yet to be constructed. This connection will be capable of providing water from

the CITY'S water system into the DISTRICT'S water system and from the DISTRICT'S water system to the CITY'S water system in the event of an emergency or maintenance outage situation.

(e) Future Interconnection Locations. In the event future interconnection locations are proposed by either PARTY, operational restrictions (i.e. flow rates, pressures, allowable duration, legal restrictions, etc.) and environmental compliance will be identified to determine if the additional interconnection(s) is (are) allowable within this Agreement. In the event an amendment or additional Agreement is necessary, the PARTIES will collaborate to develop an equitable written Amendment to this Agreement or additional Agreement, which among other things; will outline the terms and conditions for interconnecting their water systems, maintenance and operation of the interconnections, and the costs of the water supply.

5. COMPONENTS OF INTERCONNECTIONS. The interconnections shall be constructed, or modified as necessary, to include a two-way flow meter to track water usage, a blow-off on both sides of the meter, and gate valves on both sides of the blow-offs to isolate the water systems from each other.

(a) Existing Facilities. The Blossom Hill Way interconnection shall be upgraded to include all components of an interconnection. The CITY shall perform facility design and the DISTRICT shall provide written approval of the design prior to construction. The CITY shall provide a list of equipment and appurtenances with a cost estimate to the DISTRICT prior to construction. The CITY and the DISTRICT shall mutually agree in writing to the allocation of estimated costs prior to construction and to any changes in design and/or costs that may occur during construction. The DISTRICT shall have the right to inspect the installation by the CITY or the CITY'S contractor at any time during the construction. The CITY shall advance payment for any such costs and prepare final detailed cost accounting of construction. The DISTRICT shall reimburse the CITY for the DISTRICT'S share of the actual cost of the work within 60 days after receipt of an invoice following the CITY'S completion of the work.

(b) Proposed Facilities. The Crestmont Avenue and Fair Way interconnections shall be constructed and equipped in accordance with Section 4. The CITY shall perform facility design and the DISTRICT shall provide written approval of the design

prior to construction. The CITY shall provide a list of equipment and appurtenances with a cost estimate to the DISTRICT prior to construction. The CITY and the DISTRICT shall mutually agree in writing to the allocation of estimated costs prior to construction and to any changes in design and/or costs that may occur during construction. The District shall have the right to inspect the installation by the CITY or the CITY'S contractor at any time during the construction. The CITY shall advance payment for any such costs and prepare final detailed cost accounting of construction. The DISTRICT shall reimburse the CITY for the DISTRICT'S share of the actual cost of the work within 60 days after receipt of an invoice following the CITY'S completion of the work.

6. OWNERSHIP OF FACILITIES/INTERCONNECTIONS. The portion of each of the interconnections that include the CITY'S pipelines, valves, and metering vaults (flow meter/metering facilities) shall be owned, operated, and maintained by the CITY. The portion of each of the interconnections beyond the metering vault on the DISTRICT'S side of the interconnections, which include the pipelines and valves that regulate the delivery of water thereto, shall be owned, operated, and maintained by the DISTRICT.

7. MAINTENANCE. The PARTIES hereby agree that the CITY shall exercise/operate the interconnection facilities on a quarterly basis to ensure all interconnection appurtenances are in working order. The CITY shall notify the DISTRICT a minimum of 14 days in advance to allow for coordination to insure no disruption of water quality. Each PARTY will be responsible for maintenance of its own portion of the interconnections, including pipelines and valves. The PARTIES hereby agree that the cost of all recurring maintenance, repairs, and rehabilitation in the metering vault (such as leak repair, meter repair, or replacement) shall be shared equally between the CITY and the DISTRICT. The CITY shall provide the DISTRICT with at least six (6) month's advance notice of planned maintenance estimated to cost more than $10,000. Said notice shall include a list of equipment and appurtenances with a cost estimate to the DISTRICT prior to construction. The DISTRICT shall reimburse the CITY for the DISTRICT'S share of the actual cost of the work within 60 days after receipt of an invoice following the CITY'S completion of the work.

8. REGULATION OF WATER EXCHANGES. Except when the PARTIES may be providing water in response to an abnormal pressure drop on either side or when the maintenance of interconnection facilities are required, the interconnections will be regulated so that net exchanges of water between the DISTRICT and the CITY are kept at a minimum.

9. MEASUREMENT. The CITY shall read and record the interconnection meter readings on or about the first of each month and provide such written record to the DISTRICT on a monthly basis for confirmation. The CITY and the DISTRICT may inspect such measuring equipment for the purpose of determining the accuracy thereof at any time and any errors determined to be appearing therein will be adjusted.

10. WATER QUALITY. Each PARTY to this Agreement shall operate its pipelines in such a manner that any water which the CITY or the DISTRICT delivers pursuant to this Agreement shall not be diminished in quality as a result of being delivered. The PARTIES acknowledge, however, that water delivered by one PARTY will be commingled with the water of the other PARTY and that the water delivered may not be the same as that presented for delivery. The PARTIES expressly agree that the water delivered by either PARTY to the other PARTY meets, at a minimum, the State of California's Department of Drinking Water standards for domestic use. The CITY or the DISTRICT shall not be required to accept any water that does not meet all applicable statutory and regulatory water quality requirements for domestic use in the CITY or in the DISTRICT.

11. FLUORIDATION. The CITY'S water system permit requires fluoridation of potable water supplies. As such, non-fluoridated water introduced to the CITY'S system can result in conditions out of compliance. Short-term delivery (deliveries not exceeding 90 calendar days) and emergency supplies of non-fluoridated water from interconnections are allowed within current permit conditions. The DISTRICT also recognizes that any water delivered from the CITY system contains fluoride at optimal dosages and the DISTRICT is responsible for appropriate notification and action within the DISTRICT'S service areas. Should the CITY eliminate fluoridation in its system in the future, the CITY shall notify the DISTRICT of such operational changes.

12. RESPONSIBILITIES FOR DELIVERY AND DISTRIBUTION OF WATER. Neither the DISTRICT nor its officers, agents or employees shall be liable for the control, carriage, handling, use, disposal, or distribution of the water outside of facilities then being operated or maintained by the DISTRICT. Neither the CITY nor its officers, agents or employees shall be liable for the control, carriage, handling, use, disposal, or distribution of the water outside of facilities then being operated or maintained by the CITY.

13. RATES AND METHOD OF PAYMENT FOR WATER.

(a) The CITY and the DISTRICT shall reconcile payments due on Net Deliveries of treated water under this Agreement annually on a calendar year basis. Approximately 30 days after the end of each year, the PARTIES shall exchange written statements of the amounts of water provided to the other PARTY during the previous year. These statements shall be used to determine which PARTY is responsible for payment of its receipt of Net Delivery and the amount of such payment.

(b) The price to be charged by the DISTRICT or the CITY for treated water provided to the other PARTY'S system will be equal to the lowest quantity rate at the time charged by the providing PARTY for residential metered service.

(c) Neither the DISTRICT nor the CITY shall charge the other a capital or capacity fee for any water provided by it to the other PARTY through the interconnections as outlined in this Agreement. Both PARTIES intend to balance the inflows and outflows between their respective water systems on a long-term basis; therefore neither PARTY shall assess the other a capital facility fee for any Net Deliveries. However, nothing in this Agreement shall be construed as requiring one PARTY to consistently make Net Deliveries to the other. Neither PARTY shall be required to sell or permanently dedicate net capacity in its system to the other PARTY, except as provided in this Agreement.

(d) If Net Delivery is consistently to one PARTY and not the other as a result of operational constraints or needs, both PARTIES agree to meet to resolve the issue with the intent to manage the Net Delivery of water to a minimum over time as may be operationally practical.

14. INDEMNIFICATION. Each PARTY shall defend, indemnify, and hold harmless the other PARTY, its officers, agents, employees, and volunteers from and against all claims, damages, losses, and expenses, including attorney fees arising out of the performance of the work described herein, caused in whole or in part by any intentional or negligent act or omission of the other PARTY, save and except those matters arising from the sole, active negligence, or willful misconduct of that party or agent of that PARTY. This indemnity specifically includes, but is not limited to, claims or damages arising from or related to the quality, type, or character of the water delivered for wheeling, or the control, handling, carriage, use, distribution, disposal, or consumption of the water delivered to the applicable delivery point, or the construction or maintenance of the pipelines.

The PARTIES intend that this paragraph shall be broadly construed to effectuate its purpose.

15. REMEDIES NOT EXCLUSIVE. The use by either PARTY of any remedy specified for the enforcement of this Agreement is not exclusive and shall not deprive the PARTY using such remedy of, or limit the application of, any other remedy provided by California or federal law.

16. DISPUTE RESOLUTION. Any controversy or dispute between or among the CITY and the DISTRICT concerning implementation, interpretation, application, performance or lack of performance of this Agreement or its breach shall be addressed in joint consultation and negotiation with duly appointed representatives of the CITY and the DISTRICT and approved by the CITY Council and the DISTRICT Board of Directors.

17. MEDIATION AND ARBITRATION.

(a) Any controversy or dispute between or among the CITY and the DISTRICT concerning implementation, interpretation, application, performance or lack of performance of this Agreement, and any claim arising out of this Agreement or its breach that cannot be resolved pursuant to Section 16 above, shall be resolved under this Section. CITY and/or DISTRICT shall provide each other with written notice of a demand for arbitration within

ninety (90) days from the date of the occurrence giving rise to the controversy, dispute or claim that is the basis for the demand. The notice shall state the facts that give rise to the demand for arbitration, the date of the occurrence, the parties to the arbitration and the remedy sought. The PARTIES shall facilitate an effort to resolve the dispute through informal mediation on a voluntary basis during the thirty-day period following the demand for arbitration. Thereafter, if CITY and/or DISTRICT have not agreed to a resolution of the dispute or an extension of time, the dispute shall be resolved by binding arbitration under the California Arbitration Act (Code of Civil Procedure sections 1280 through 1294.2), except as otherwise provided herein. The PARTIES in the arbitration shall select a single neutral arbitrator. If they cannot agree on one arbitrator, or an alternative selection process, PARTIES shall request the presiding judge of the Placer County Superior Court to select an arbitrator, under Section 1281.6 of the Code of Civil Procedure.

(b) A hearing on the matter to be arbitrated shall take place before the arbitrator in the County of Placer at a time and place selected by the arbitrator. However, the hearing shall take place no later than thirty days after selection of the arbitrator, unless the parties unanimously agree to extend this time. The arbitrator shall select the time and place for the hearing and shall give each party written notice of the time and place at least twenty days before the date of the hearing. At the hearing, any relevant evidence may be presented by any party and the formal rules of evidence applicable to judicial proceedings shall not apply. Evidence may be admitted or excluded in the sole discretion of the arbitrator. The arbitrator shall hear and determine the matter, and shall resolve in writing the dispute among the parties. The decision of the arbitrator shall be binding and conclusive.

(c) The ongoing costs of the arbitration, including the arbitrator's fees, and reasonable costs incurred by CITY to facilitate the mediation and the arbitration, shall be borne equally by the PARTIES. At the conclusion of the arbitration, the prevailing party shall be entitled to recover from the losing party the costs of arbitration (but not mediation costs), in addition to reasonable attorney's fees, expert witness fees and other costs as part of the arbitrator's decision.

18. CHOICE OF LAW. This Agreement and the rights of the PARTIES hereunder shall be governed by and construed in accordance with the laws of the State of California, exclusive of conflict or choice of law rules.

19. WAIVER OF RIGHTS. Any waiver at any time by either PARTY of its rights with respect to a breach or default, or any other matter arising in connection with this Agreement, shall not be deemed to be a waiver with respect to any other breach, default or matter.

20. TERMS OF AGREEMENT. The terms of this Agreement are effective upon execution by both PARTIES and continue in full force and effect unless terminated by either PARTY with 60-day advance notice in writing to the other PARTY.

21. ASSIGNMENT. The provisions of this Agreement shall apply to and bind the successors and assigns of the respective PARTIES, but no assignment or transfer of this Agreement, or any part hereof or interest herein, shall be valid until and unless approved by both PARTIES.

22. OPINIONS AND DETERMINATIONS. Where the terms of this Agreement provide for action to be based upon judgment, approval, review, or determination of either PARTY, such terms are not intended to be and shall never be construed as permitting such opinion, judgment, approval, review, or determination to be arbitrary, capricious, or unreasonable.

23. NOTICES. All written notices that are required either expressly or by implication to be given by any PARTY to the other under this Agreement shall only be signed by authorized officers of the notifying PARTY.

Any written notices to PARTIES required by this Agreement shall be delivered or mailed, U.S. first class postage prepaid, addressed as follows:

CITY OF ROSEVILLE	CITRUS HEIGHTS WATER DISTRICT
City Clerk	General Manager
311 Vernon Street	P.O. Box 286
Roseville, CA 95678	Citrus Heights, CA 95611-0286

Either PARTY may amend its address for notice by sending written notice to the other PARTY.

24. INSPECTION OF BOOKS AND RECORDS. The proper officers or agents of each PARTY shall have full and free access at all reasonable times to the account books and official records of the other PARTY insofar as they pertain to the matters and things provided for in this Agreement, with the right at any time during office hours to make copies thereof at that PARTY'S expense.

25. INTEGRATION. This is an integrated Agreement and contains all of the terms, considerations, understanding and promises of the PARTIES. It shall be read as a whole.

25. SEVERABILITY. The invalidity or unenforceability of any provisions of this Agreement shall not affect the validity or enforceability of any other provision of this Agreement, which shall remain in full force and effect.

26. ATTORNEY'S FEES. In any action brought by either PARTY to enforce the terms of this Agreement, the prevailing party shall be entitled to recover its reasonable attorney's fees.

27. COUNTERPARTS. This Agreement may be executed in counterparts.

IN WITNESS WHEREOF, the City of Roseville, a municipal corporation, has authorized the execution of this Agreement in duplicate by its City Manager and attested to by its City Clerk under the authority of Resolution No. _____adopted by the Council of the City of Roseville on the _____ day of _____, 201_, and the Citrus Heights Water District has caused this Agreement to be executed by its General Manager and attested to by its Secretary to the District Board of Directors by the District's Resolution No. 29-2016 adopted by the District Board of Directors on the 8th day of November, 2016.

Signature page(s) to follow:

CITY OF ROSEVILLE,
a municipal corporation:

By _____

Rob Jensen
City Manager

ATTEST:

_____

Sonia Orozco
City Clerk

Approved as to Form

_____

Robert Schmitt
City Attorney

Approved as to Substance

_____ FOR

Richard D. Plecker
Environmental Utilities Director

CITRUS HEIGHTS WATER DISTRICT,
an irrigation district:

By Robert A. Churchill

Robert A. Churchill
General Manager

ATTEST:

Robert A. Churchill

Robert A. Churchill
Secretary

Approved as to Form

Judith Kammins Albietz
Albietz Law Firm for
Citrus Heights Water District

Approved as to Substance

Robert A. Churchill

Robert A. Churchill
General Manager

"ATTACHMENT A"

WATER SYSTEM INTERCONNECTION POINTS

Orlando Intertie - Exiting Configuration

Graphic: Not to Scale

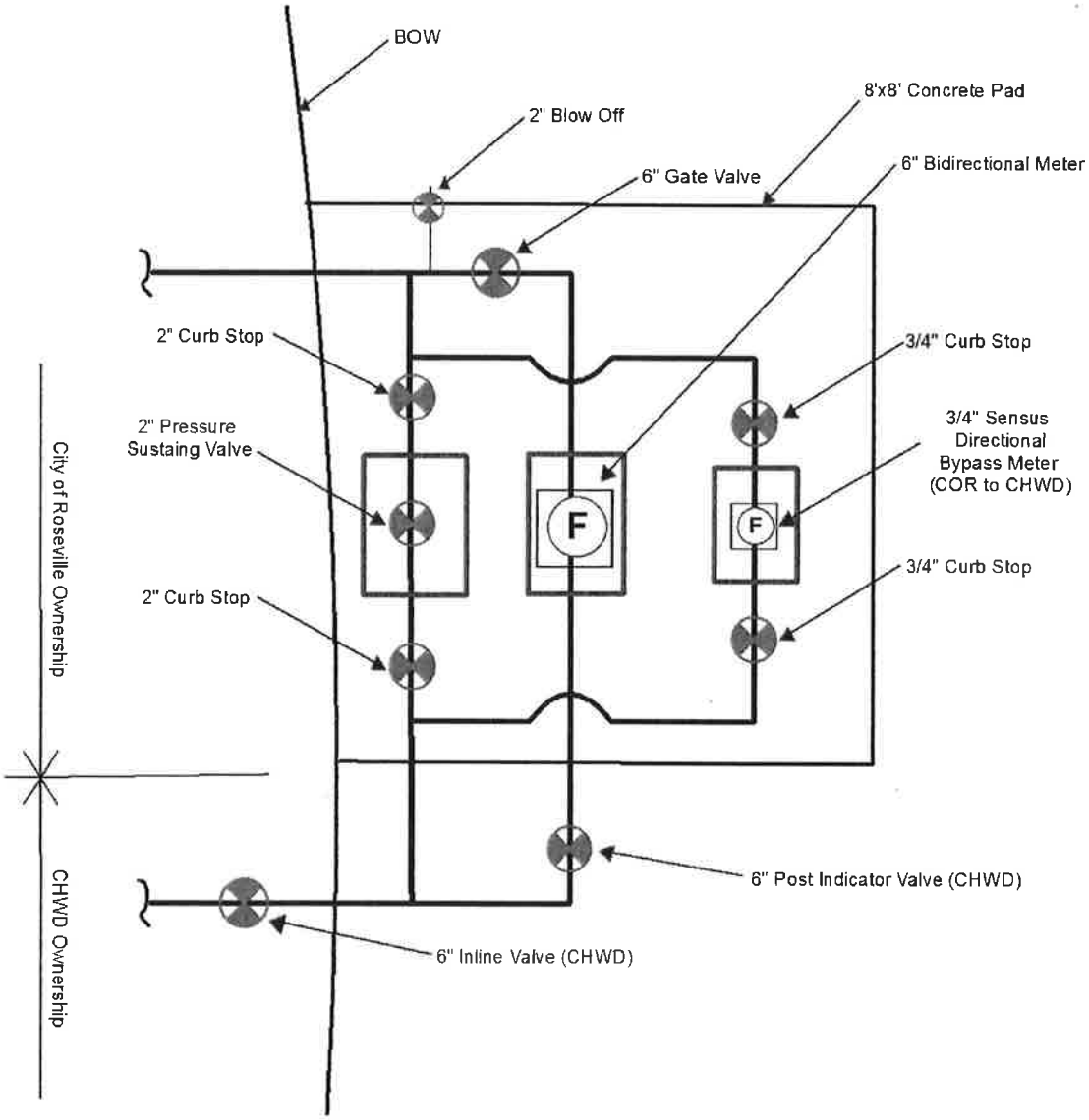

NOTES

1. Map Displays Interties' Existing Configuration

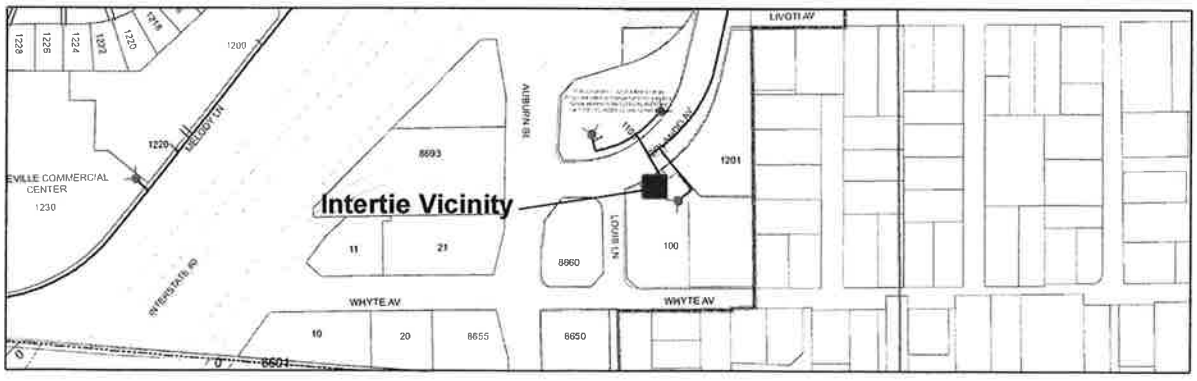

Blossom Hill Way Interconnection

Graphic: Not to Scale

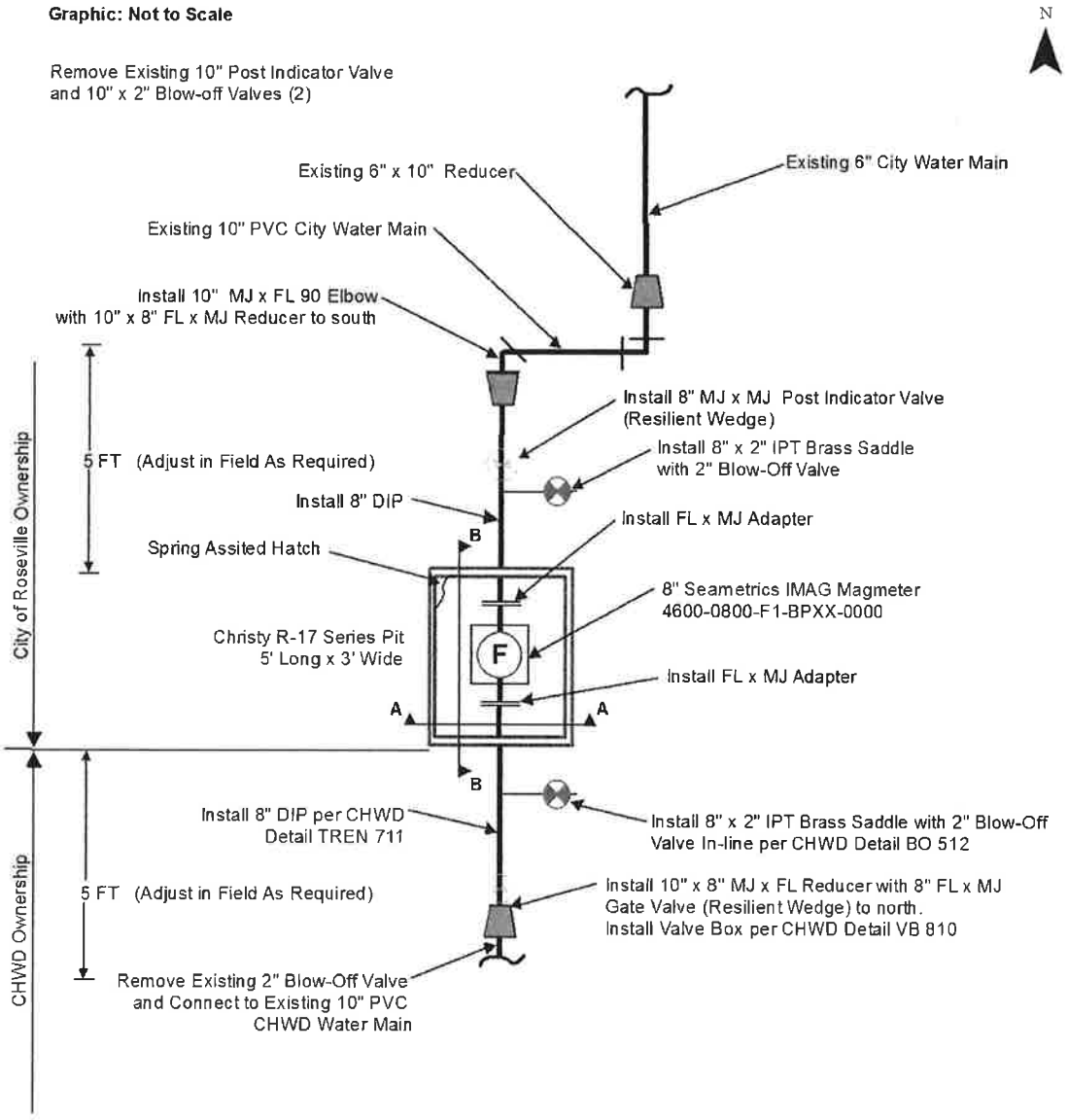

NOTES

1. All pipe installation shall be 8" PC 350 Ductile Iron Pipe (DIP)
2. Installed in landscape area
3. All DIP Joints and Appurtenances shall be installed per Section 81-9 , City Of Roseville Domestic Water Supply Construction Standards
4. All Installation shall be fully restrained
5. Provide mechanical seal between DIP and Pit at pipe penetrations - Leakseal or approved equal

APPROVED FOR CONSTRUCTION

CITY OF ROSEVILLE **DATE**

CITRUS HEIGHTS WATER DISTRICT **DATE**

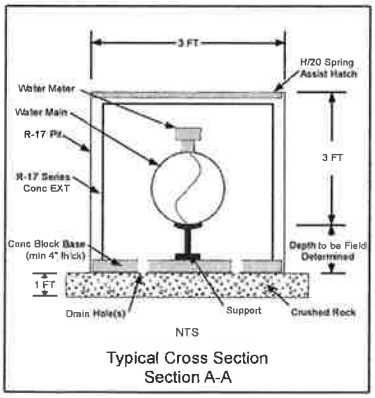

Typical Cross Section
Section A-A

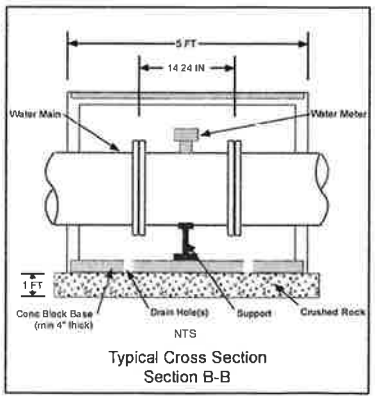

Typical Cross Section
Section B-B

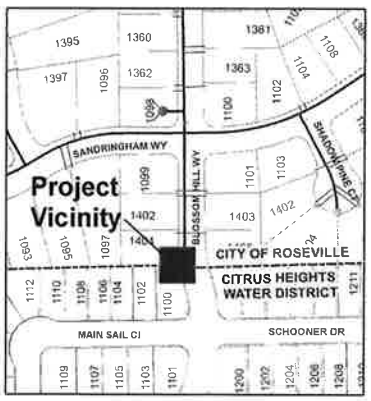

Crestmont Avenue Interconnection

Graphic: Not to Scale

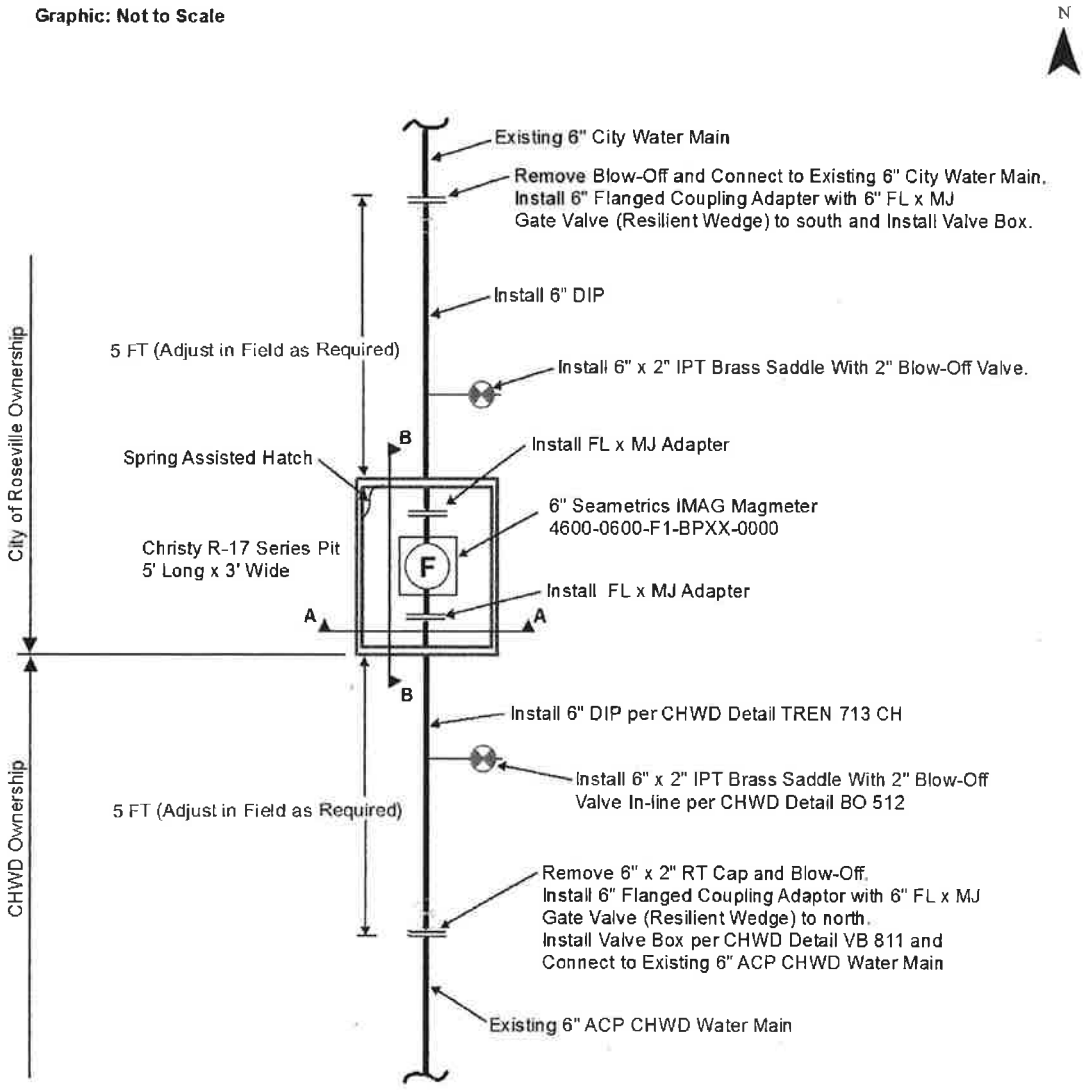

NOTES

1. All pipe for installation shall be 6" PC 350 Ductile Iron Pipe (DIP)
2. Install in Pavement
3. All DIP Joints and Appurtenances Shall Be Installed Per Section 81-9 , City Of Roseville Domestic Water Supply Construction Standards
4. All Installation shall be fully restrained
5. Provide mechanical seal between DIP and Pit at pipe penetrations - Leakseal or approved equal

APPROVED FOR CONSTRUCTION

CITY OF ROSEVILLE	**DATE**
CITRUS HEIGHTS WATER DISTRICT	**DATE**

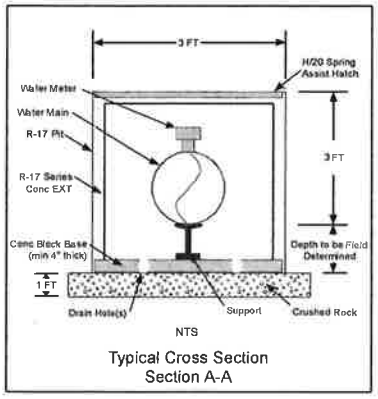

Typical Cross Section
Section A-A

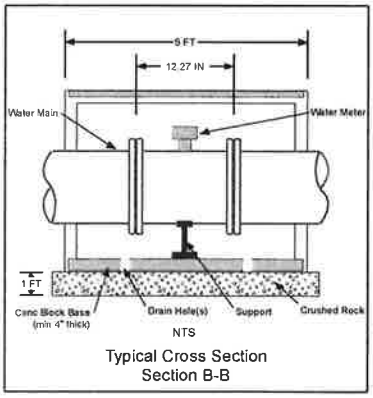

Typical Cross Section
Section B-B

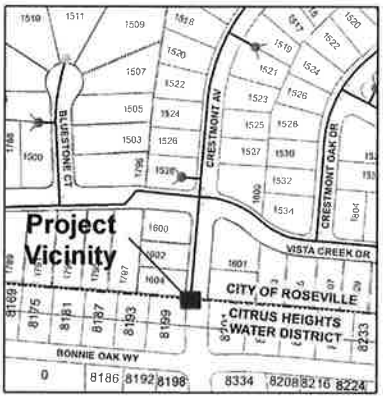

Fair Way Interconnection

Graphic: Not to Scale

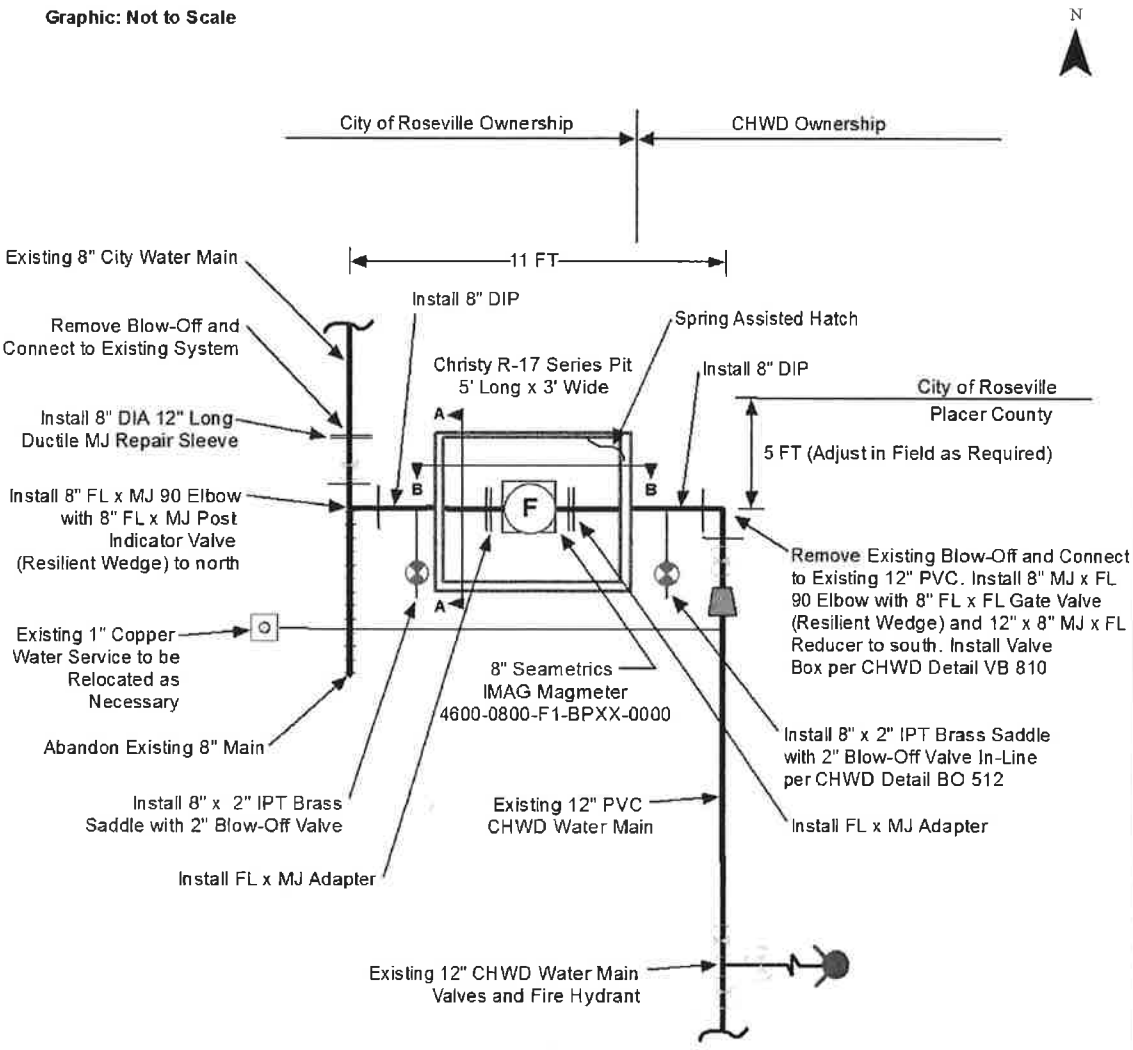

NOTES

1. All pipe for installation shall be 8" PC 350 Ductile Iron Pipe (DIP)
2. Installed in unimproved roadway
3. All DIP Joints and Appurtenances shall be Installed per Section 81-9, City Of Roseville Domestic Water Supply
4. All Installation shall be fully restrained
5. Provide mechanical seal between DIP and Pit at pipe penetrations - Leakseal or approved equal

APPROVED FOR CONSTRUCTION

CITY OF ROSEVILLE _____ **DATE** _____

CITRUS HEIGHTS WATER DISTRICT _____ **DATE** _____

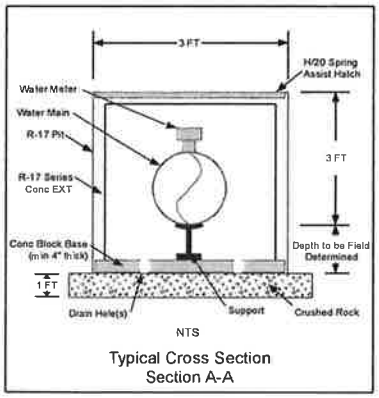

Typical Cross Section
Section A-A

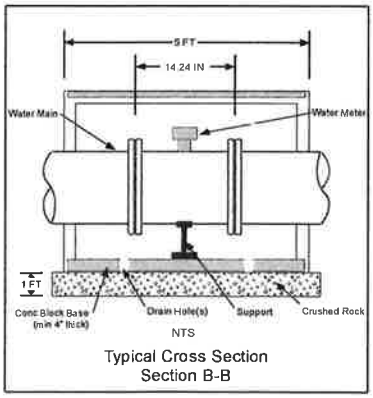

Typical Cross Section
Section B-B

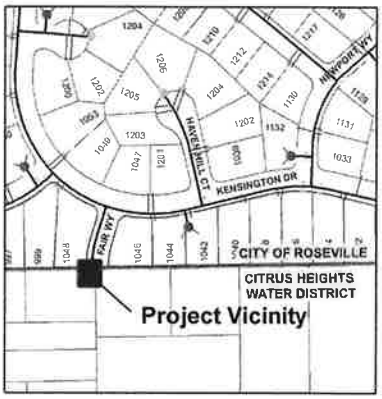

COUNCIL COMMUNICATION

CC #: 8304
File #: 0206 & 0206-03

Title:	City of Roseville Debt Management Policy and Goals and Policies Concerning the Use of Mello-Roos Community Facitlities Act of 1982
Contact:	Jeannine Thrash 916-774-5473 jthrash@roseville.ca.us Jay Panzica 916-774-5320 jpanzica@roseville.ca.us

Meeting Date: 3/1/2017
Item #: 6.5.

RECOMMENDATION TO COUNCIL

Staff recommends City Council adopt a resolution approving the changes to the City of Roseville Debt Management Policy effective January 31, 2017 and adopting the City of Roseville Goals and Policies Concerning the Use of Mello-Roos Community Facilities Act of 1982 effective January 31, 2017.

BACKGROUND

The City Council adopted Resolution No. 16-307 which adopted a debt management policy to provide guidelines for the issuance of bonds and other forms of indebtedness to finance necessary land acquisitions, capital construction, equipment, and other items for the City. The passage of SB 1029 required that our policy be revised in order to be in compliance with the law. The new law requires issuers of bonds after January 1, 2017 to have adopted a local debt policy that at least includes the following items:
(A) The purpose for which the debt proceeds may be used.
(B) The types of debt that may be issued.
(C) The relationship of the debt to, and integration with, the issuer's planning goals and objectives.
(D) Policy goals related to the issuer's planning goals and objectives.
(E) The internal control procedures that the issuer has implemented, or will implement, to ensure that the proceeds of the proposed debt issuance will be directed to the intended use.

The attached revised debt management policy replaces the prior Council approved debt management policy that was effective as of July 1, 2016. The debt management policy that was effective as of July 1, 2016 included Appendix B, CFD Goals and Policies. A decision was made by the Finance Department to have Appendix B separate from the July 1, 2016 version of the Debt Management Policy and become its own standalone policy, renaming it to the City of Roseville Goals and Policies Concerning the Use of Mello-Roos Community Facilities Act of 1982, effective January 31, 2017. No changes were made to this section other than an effective date of January 31, 2017.

FISCAL IMPACT

Neither the Debt Management Policy nor the Goals and Policies Concerning the Use of Mello-Roos Community Facilities Act of 1982 will have any impact on the City's General Fund.

ECONOMIC DEVELOPMENT / JOBS CREATED

Approval of the policies will not have an impact on the economic development or job creation.

ENVIRONMENTAL REVIEW

The policies are not considered a "project" as defined by the California Environmental Quality Act (CEQA) (CEQA Guidelines 15378). Consequently no CEQA action is required.

Respectfully Submitted,

Jeannine Thrash, Administrative Analyst

Jay Panzica, Chief Financial Officer

_____

Rob Jensen, City Manager

ATTACHMENTS:

Description

Resolution No. 17-85

Debt Management Policy

Changes to Debt Management Policy (redline)

Goals and Policies Concerning Use of Mello-Roos Community Facilities Act of 1982

RESOLUTION NO. 17-85

ADOPTING A DEBT MANAGEMENT POLICY AND GOALS AND POLICIES CONCERNING THE USE OF MELLO-ROOS COMMUNITY FACILITIES ACT OF 1982

WHEREAS, in 2016 the City Council adopted a City of Roseville Debt Management Policy ("Debt Management Policy") to provide guidelines for the issuance of bonds and other forms of indebtedness to finance necessary land acquisitions, capital construction, equipment, and other items for the City; and

WHEREAS, that Debt Management Policy included Appendix B, entitled CFD Goals and Policies, which staff is recommending become its own standalone policy and renamed as the City of Roseville Goals and Policies Concerning the Use of Mello-Roos Community Facilities Act of 1982; and

WHEREAS, SB 1029 requires that the City's debt policy be revised in order to be in compliance with the law; and

WHEREAS, the amended Debt Management Policy as well as the Goals and Policies Concerning Use of Mello-Roos Community Facilities Act of 1982 have been reviewed by the City Council;

NOW, THEREFORE, BE IT RESOLVED by the Council of the City of Roseville that said Debt Management Policy and Goals and Policies Concerning Use of Mello-Roos Community Facilities Act of 1982 are hereby adopted.

PASSED AND ADOPTED by the Council of the City of Roseville this ___ day of _____, 20__, by the following vote on roll call:

AYES COUNCILMEMBERS:

NOES COUNCILMEMBERS:

ABSENT COUNCILMEMBERS:

_____
MAYOR

ATTEST:

_____
City Clerk

City of Roseville
Debt Management Policy

Effective January 31, 2017

TABLE OF CONTENTS

INTRODUCTION 4

DEBT ISSUANCE 5

I. Types of Bond Sales 5

A. Competitive Sale 5

B. Negotiated Sale 5

C. Private Placement/Bank Direct Purchase (BDP) 5

II. Issuer Characteristics 6

A. Market Familiarity 6

B. Credit Strength 6

C. Policy Goals 6

III. Financing Characteristics 6

A. Type of Debt Instrument 6

B. Issue Size 6

C. Market Conditions and Timing 6

D. Story Bonds 7

FINANCIAL SERVICE PROVIDERS 7

I. Selection 7

II. Use of Independent Financial Advisors 7

III. Communication/Solicitation 8

DEBT MANAGEMENT PROCESS – TAX STATUS 8

I. Tax-Exempt 8

II. Taxable 8

DEBT MANAGEMENT PROCESS – TYPE OF DEBT 8

I. Fixed Rate Debt 8

II. Variable Rate Debt 9

III. Use of Alternative Debt Instruments 9

A. Derivative Products 9

DEBT MANAGEMENT PROCESS – DEBT CAPACITY 10

DEBT MANAGEMENT PROCESS – SECURITY OF DEBT 10

I. General Obligation (G.O.) Bonds 10

II. Revenue Bonds 10

III. Certificates of Participation (COP) Bonds 10
IV. Housing Bonds 10
V. Community Facilities District (CFD) Bonds 11
VI. Special Assessment Bonds 11
DEBT MANAGEMENT PROCESS – PURPOSE OF FINANCING 11
I. New Money Financing 11
II. Refunding Bonds 11
DEBT MANAGEMENT PROCESS - CREDIT RATINGS 12
I. Rating Agency Relationships 12
II. Use of Rating Agencies 12
DEBT MANAGEMENT PROCESS – CREDIT ENHANCEMENT 13
I. Bond Insurance 13
A. Benefit Analysis 13
B. Provider Selection 13
II. Bank Facilities (Letters of Credit) 144
DEBT MANAGEMENT PROCESS – STRUCTURAL FEATURES 14
I. Maturity 14
II. Debt Service Structure 14
III. Lien Levels 14
IV. Capitalized Interest 14
INVESTMENT OF BOND PROCEEDS 15
CONTINUING DISCLOSURE 15
ARBITRAGE REBATE 15
POST ISSUANCE COMPLIANCE 16
APPENDIX A 17
SWAP POLICY 17
ATTACHMENT 1 27

CITY OF ROSEVILLE
DEBT MANAGEMENT POLICY

INTRODUCTION

The Finance Department of the City of Roseville (the "City") has developed this Debt Management Policy (the "Debt Policy") to provide guidelines for the issuance of bonds and other forms of indebtedness to finance necessary land acquisitions, capital construction, equipment, and other items for the City.

While the issuance of debt is frequently an appropriate method of financing capital projects and major equipment acquisitions, such issuance must be carefully monitored to preserve the City's credit strength and to provide the necessary flexibility to fund future capital needs.

SCOPE

This Debt Policy shall govern, except as otherwise covered by the law, City Charter and City Code, the issuance and management of all debt and lease financings funded in the capital markets by or for the benefit of the City, the Roseville Finance Authority the Natural Gas Financing Authority and/or the Successor Agency to the former Redevelopment Agency of the City of Roseville. As used herein, references to "City" shall include the applicable issuing entity, and references to "City Council" shall include the applicable issuing entity's governing body, as the context requires. While adherence to the Debt Policy is desired, the City recognizes that changes in the capital markets as well as unforeseen circumstances may from time to time produce situations that are not covered by the Debt Policy and may require modifications or exceptions to achieve City goals.

The City's Debt Policy shall be reviewed, and updated if necessary, on an annual basis. The Chief Financial Officer (CFO) with the assistance of the Finance Director and General Accounting staff shall have the responsibility and authority for structuring, implementing and managing the City's debt and financing program, in accordance with City Council authorizations.

OBJECTIVES AND POLICY GOALS

The City has earned some of the highest credit ratings in the nation and as a result receives some of the lowest possible interest rates on its debt. These low interest rates result in a lower overall cost of capital to the City. This Debt Policy will assist the City in determining appropriate uses of debt financing, establish certain debt management goals and assist the City in maintaining its high credit ratings, while assuming a prudent level of financial risk and preserving the City's flexibility to finance future capital programs and requirements. Additionally, this Debt Policy is intended to set forth criteria for selecting firms to provide certain financial, legal, and other

related services that will ensure that a fair and open selection process is used which provides opportunities for all qualified firms, including minority and women owned businesses.

DEBT ISSUANCE

There are three general methods of issuing debt obligations: competitive sale, negotiated sale and private placement.

I. Types of Bond Sales

A. Competitive Sale

In a competitive sale, security dealers submit bids either in a sealed bid or electronically secure process and the security dealer with the lowest True Interest Cost (TIC) and in compliance with the bid parameters is awarded the bonds.

B. Negotiated Sale

In a negotiated sale, an underwriter or underwriter syndicate is selected for a particular transaction, or to serve in a pool for a period of time, through a Request for Qualifications (RFQ) process or a Request for Proposal (RFP) process. The interest rate and underwriter's fee are negotiated prior to the sale, based on market conditions.

C. Private Placement/Bank Direct Purchase (BDP)

A private placement or bank direct purchase is a sale that is structured specifically for one purchaser, such as a mutual fund or a bank. BDPs are usually quicker and less expensive for municipalities than competitive or negotiated bond sales because they impose fewer requirements on the issuer. The interest rate may be a fixed or variable rate, as agreed between the issuer and purchaser. The term of the bonds may range from under 10 years to 15 years or not much longer, as agreed between the issuer and purchaser. The bonds may or may not be tax-exempt bonds for federal income tax purposes. If the CFO, or his/her designee, determines that it is in the best interest of the City from a cost or administrative standpoint, the Finance Department may negotiate financing terms with banks and financial institutions for specific borrowings.

It shall be the policy of the City to ensure the lowest risk and lowest overall interest rate to the City when issuing debt either through a competitive sale, negotiated sale or private placement, where appropriate. The City shall use the following criteria to determine whether a competitive or negotiated sale should be used.

II. Issuer Characteristics

A. Market Familiarity

A frequent issuer of a well-recognized credit such as general obligation bonds can generally sell these bonds through a competitive sale since investors and underwriters are familiar with the quality of the credit. A negotiated sale may be appropriate if extensive pre-marketing to investors is desired or required.

B. Credit Strength

The higher the credit quality of the bonds being issued, the more likely the bonds can be sold using a competitive sale due to the high demand for high quality municipal bonds. High quality credits fare well in competitive sales.

C. Policy Goals

A competitive sale does not provide the City with the flexibility of choosing the underwriter or underwriter syndicate. If the CFO concludes that determining the composition of the underwriter syndicate to achieve certain policy objectives is important, then a negotiated sale will be required. However, if the CFO selects the negotiated sale solely for policy reasons then the specific rationale and criteria for selection should clearly be specified.

III. Financing Characteristics

A. Type of Debt Instrument

The market favors familiar debt instruments such as general obligation bonds backed by the full faith and credit of the City or Mello-Roos bonds backed by special taxes levied within a community facilities district (CFD). New credit types may require an education process that is more conducive to a negotiated sale until the market becomes comfortable with the credit.

B. Issue Size

The size of the bond sale will influence both investor interest in the bonds and the market's ability to absorb the bonds. In general if the bond sale is too small or too large a negotiated sale may be necessary. A small sale may require greater marketing to garner investor interest while a large sale may be difficult for the market to absorb without the presale activity available in the negotiated sale process.

C. Market Conditions and Timing

During periods of stable interest rates, market timing is not as critical. However, during periods of volatile interest rates, the timing of the sale becomes more critical. Bond refundings are also often very interest rate sensitive in terms of the potential level of savings or the general feasibility of the refunding. The negotiated

sale provides more flexibility in terms of the structure of the bond sale as well as the timing of the bond sale and may be more appropriate when issuing refunding bonds and when interest rates are volatile.

D. Story Bonds

Bonds that require a detailed explanation due to the complexity of the credit or the repayment of the bonds are often referred to as "Story Bonds". Due to their complexity and the additional explanation these bonds require, an extensive pre-marketing campaign is necessary. Story Bonds often require a negotiated sale composed of an underwriting syndicate that is qualified to market the bonds in order to obtain the lowest financing cost for the City. An example may be a new CFD with a single landowner-developer or other credit characteristics that need to be explained to investors.

FINANCIAL SERVICE PROVIDERS

I. Selection

In connection with debt financings, financial advisors, underwriters, and other service providers will be selected from a Qualified Vendors List (QVL) developed through a periodic Request for Qualifications (RFQ) process or, for individual financings, through a Request for Proposals (RFP) process, whichever method is deemed most appropriate given the specifics of the financing. At the discretion of the CFO, contracts may be awarded on a sole source basis if it is clear that an RFQ/RFP process is not feasible or not in the best interest of the City.

For competitive sales, any security dealer meeting the qualification criteria outlined in the competitive bid notice may bid in the competitive sale. For negotiated sales, only those underwriters qualified under the RFQ/RFP process may be selected. Underwriters or underwriter syndicates will be selected by the CFO. The allocation of bonds among syndicate members will be at the sole discretion of the CFO with the approval of the City Manager or his/her designee.

II. Use of Independent Financial Advisors

The City will hire financial advisors who are independent. In the event the best available financial advisor is an investment banking firm, the firm will under no circumstances be permitted to participate as the lead underwriter or as a member of an underwriter syndicate that is bidding on the bonds for which the firm is acting as a financial advisor. In addition, if the firm has any profit sharing or other type of agreement with any member of the underwriting syndicate for the transaction in question, they will not be allowed to act as the financial advisor. In general, no agreement will be permitted that would compromise the firm's ability to provide independent advice or that could be reasonably perceived by the City as a conflict of interest. Advisors must alert the CFO, in writing, of

any conflict, potential conflict, or potentially perceived conflict prior to entering into an agreement with the City, or if occurring after entering into an agreement with the City, as soon as the conflict, potential conflict, or potentially perceived conflict arises.

III. Communication/Solicitation

All financial consultants, including all investment banking firms, financial advisors, bond counsel, and other consultants hired in connection with any bond transaction will direct all communications, solicitations and questions to the CFO or his/her designee. Underwriters are reminded that under Rule G-37 of the Municipal Securities Rulemaking Board (MSRB) that a firm may be banned from providing underwriting services to the City for two years for making any political contributions to elected City officials.

DEBT MANAGEMENT PROCESS – TAX STATUS

Prior to the issuance of any bonds, the Finance Department, in conjunction with bond counsel and the City Attorney's Office will evaluate the tax status of any bond sales.

I. Tax-Exempt

Interest on tax-exempt bonds is excluded from the gross income of its owners for federal income tax purposes and from California income taxes and as a result tax-exempt bonds can be sold at a lower true interest cost than taxable bonds. The City, along with bond counsel, will evaluate all projects to be funded to assess their eligibility to be funded by tax-exempt bonds. The City will make every effort to ensure that all tax regulations are complied with to ensure the bonds maintain their tax-exempt status.

II. Taxable

Certain municipal bonds are sold as taxable bonds because they are issued for purposes that the federal government deems do not provide a significant benefit to the public at large or involve "private activity". In addition, certain tax laws such as the alternative minimum tax (AMT) reduced the tax exemption applicable to certain types of bonds and to certain taxpayers. Taxable bonds will be used whenever a particular project has the potential for private activity or other uses that may call into question the eligibility to use tax-exempt financing.

DEBT MANAGEMENT PROCESS – TYPE OF DEBT

I. Fixed Rate Debt

Longer term debt usually consists of fixed interest rates over the term of the bonds and should be used to finance essential capital facilities, projects and certain equipment where it is appropriate to spread the cost of the project over more than one budget year and generally for a period not to exceed the useful life of the project being financed. In so doing, the City recognizes that future taxpayers who will benefit from the project will pay a share of its cost. Fixed rate debt provides the benefit of fixed payments during the

life of the bonds and budget certainties for long-term capital planning. However, fixed rate debt is typically longer term and carries higher interest payments (assuming an upward sloping yield curve) than variable rate debt but is not subject to changes in interest rates. Fixed rate debt is the most common type of debt issued by the City.

II. Variable Rate Debt

The municipal bond market has developed several vehicles by which municipalities can borrow at short-term, variable interest rates. Variable Rate Demand Notes may be issued with interest rates that "reset" daily, weekly, monthly or semiannually at the option of the City. Commercial paper is issued with a maturity of up to 270 days at the City's option. As the commercial paper matures, it is resold by a commercial paper dealer for another period up to 270 days.

These products are structured as a rolling series of short-term investments and therefore are priced at the short-end of the yield curve at lower interest rates than long-term fixed rate bonds (assuming an upward sloping yield curve). By accepting the risks inherent in variable interest rates, the City can take advantage of the lowest rates available in the current market.

Factors that will be considered in the use of variable rate debt are the availability and size of fund balances to cover variable rate risk, and the budget flexibility of the program being financed. Programs with large complex capital programs may use short-term financing to fund uncertain construction cash flow requirements. The short-term debt can be refinanced as fixed-rate, long term debt once the projects are complete. A project that must be carried in anticipation of grant funding may also be a candidate for the use of variable rate financing. Examples are the Electric, Water, and Wastewater enterprise funds.

III. Use of Alternative Debt Instruments

A. Derivative Products

The use of certain derivative products, such as swaps, swaptions and the sale of call options, allow the City to realize lower all-in costs on a new debt issuance or to receive an upfront payment. One type of swap that may be used would allow the City to issue variable rate debt in exchange for fixed payments that are typically lower than fixed rate debt. However, such products have unique risks that the City and its financial advisors will evaluate as per the City's Swap Policy. The current Swap Policy is included in Appendix A.

DEBT MANAGEMENT PROCESS – DEBT CAPACITY

The determination of how much indebtedness the City can afford begins by assessing the sufficiency of future revenues. The amount of debt issued is based on the requirements of the approved 5-year CIP, subject to the condition that sufficient revenues are projected to be available, and each debt issuance shall take into account the capital improvements needs specified in the CIP and the City's current budget. Factors such as debt service coverage requirements outlined in the bond indentures, the impact on the citizens (tax rates), and any impact on the bond ratings will be carefully considered. Different factors are considered for each type of credit. For example, Revenue or Certificates of Participation bonds for electric, water and wastewater bonds will consider the impact on customer utility bills. In the case of general obligation debt, State Statutes and the Constitution limit the amount of debt that a municipality can have outstanding.

DEBT MANAGEMENT PROCESS – SECURITY OF DEBT

I. General Obligation (G.O.) Bonds

G.O. bonds are backed by the full-faith and credit of the City and are secured by ad valorem property taxes.

II. Revenue Bonds

Revenue bonds are supported solely from charges and fees generated from specific Enterprise Funds. Accordingly, in order to preserve debt capacity and budget flexibility, the City will issue revenue bonds when an identifiable revenue stream can be dedicated to support the payment of debt service. The final maturity of revenue obligations will be determined by the expected life of the project to be financed and the revenues available to repay the debt. The City's various Enterprise Funds – Electric, Water, and Wastewater issue bonds backed by revenues of the enterprise. Revenue bonds are generally issued through the Roseville Finance Authority.

III. Certificates of Participation (COP) Bonds

COP bonds are an instrument evidencing a pro rata share in a specific pledged revenue stream, usually lease payments by the issuer that are typically subject to annual appropriation. The certificate generally entitles the holder to receive a share, or participation, in the payments from a particular project. The payments are passed through the lessor to the certificate holders. The lessor typically assigns the lease and the payments to a trustee, which then distributes the payments to the certificate holders.

IV. Housing Bonds

Tax-exempt housing bonds are an important source of capital, providing loans for single-family homeownership and rental housing for very-low, low and moderate-

income individuals and families. The relatively low tax-exempt interest rates, combined with federal, state, and local housing assistance programs, provide the necessary subsidy to create a supply of much needed, below market interest-rate loans.

V. Community Facilities District (CFD) Bonds

CFD bonds are issued and backed entirely by a Community Facilities District established under State Statutes for the purpose of managing and financing public improvements within the district boundaries. Any CFDs established in the City are reviewed by the Finance Department and the Finance Department will supervise the issuance of the debt on behalf of the CFD with the CFD paying all costs of issuance including administrative support. The creation of a CFD must be approved by City Council and follow a detailed legal process. Guidance for the use of CFDs and issuance of bonds for CFDs can also be found in the City's Guidelines and Policies concerning the use of the Mello Roos Community Facilities Act of 1982.

VI. Special Assessment Bonds

Special assessment bonds are a special type of municipal bond used to fund development projects that benefit a discrete group of taxpayers within a special assessment district. Principal and interest owed on the bonds is paid from assessments on the property benefiting from the particular bond-funded project. The creation of an Assessment District must be approved by City Council and follow a detailed legal process.

DEBT MANAGEMENT PROCESS – PURPOSE OF FINANCING

Generally, financings may be undertaken to fund new projects ("new money financing") or to refund existing bonds.

I. New Money Financing

New money issues are those financings that generate funding for capital projects. These funds will be used for necessary land acquisitions, capital construction, equipment, and other items for the City. New money bond proceeds are generally not used to fund operational activities. The City also may use its commercial paper programs to provide interim new money funding. The commercial paper notes are retired upon receipt of bond proceeds from a long-term fixed rate financing.

II. Refunding Bonds

A periodic review of the City's outstanding debt will be undertaken by the Finance Department to determine refunding opportunities.

Refunding bonds are issued to retire all or a portion of an outstanding bond issue. Most typically this is done to refinance at a lower interest rate to reduce overall debt service. Alternatively, some refundings are undertaken for reasons other than to achieve cost savings, such as to restructure debt service payments, to change the type of debt instruments being used, or to eliminate undesirable covenants.

In any event, a present value savings analysis must be prepared that identifies the economic effects of any refunding being considered by the City. The savings from any particular refunding candidate shall generally be at least 5% of the refunded par amount, net of all transaction expenses. This 5% savings target may be waived by the CFO, or his/her designee, upon a finding that such a refunding is in the City's best overall financial interest and shall not be applicable for refunding transactions that are not solely undertaken to achieve cost savings.

DEBT MANAGEMENT PROCESS - CREDIT RATINGS

The City seeks to obtain and maintain the highest possible credit ratings for all categories of short- and long-term debt. The City will not issue bonds that do not carry investment grade ratings.

I. Rating Agency Relationships

The CFO, or his/her designee, shall be responsible for maintaining relationships with rating agencies that assign ratings to the City's various debt obligations. This responsibility shall include coordinating meetings and presentations in conjunction with the issuance of debt. Full disclosure of operations and open lines of communication shall be maintained with the rating agencies used by the City.

II. Use of Rating Agencies

The City may obtain a rating from at least one nationally recognized rating agency on all new bond issues being sold in the public market. The CFO, or his/her designee, shall determine whether or not any additional ratings will be requested on a particular financing. The CFO, or his/her designee, shall determine which major rating agencies will be asked to provide a rating. Exceptions to this requirement, such as when using a private placement, are permissible, if warranted by the circumstances and approved by the CFO, or his/her designee.

The City and/or the financing team shall notify the rating agencies by telephone or through written correspondence when the City anticipates issuing bonds. Bond documentation shall be sent several weeks prior to the bond sale to the selected rating agencies in order to provide the rating agencies sufficient time to perform their review.

A personal meeting with the selected rating agencies may be scheduled if, in the opinion of the CFO, or his/her designee, such a meeting is in the best interest of the City in order to obtain the highest possible credit rating.

The City shall make every reasonable effort to maintain or improve its high quality credit ratings.

The City may request an underlying rating and an insured rating on all bond issues utilizing bond insurance.

The City shall submit its audited comprehensive annual financial report to all rating agencies utilized by the City.

DEBT MANAGEMENT PROCESS – CREDIT ENHANCEMENT

Although the City has high credit ratings, credit enhancement through the use of bond insurance or a bank facility such as a letter of credit to strengthen the underlying credit rating of certain bonds may be financially beneficial. Bonds insured by insurers rated higher than the bonds to be sold by the City will also receive the insurer's rating, and thus be able to be sold at a lower interest rate. Bank facilities, such as letters of credit from highly rated banks, can also be used to provide credit enhancement.

I. Bond Insurance

Bond insurance will be considered when it provides an economic benefit to a particular bond maturity or entire issue. Bond insurance provides improved credit quality for the bonds as a result of the insurance provider's guarantee of the payment of principal and interest on the bonds. Because of the decreased risk of non-payment, investors are willing to purchase insured bonds at lower yields than uninsured bonds, thus providing the issuer with interest cost savings.

A. Benefit Analysis

The decision to use bond insurance is an economic decision. A benefit analysis compares the present value of the interest savings to the cost of the insurance premium. Insurance will be purchased when the premium cost is less than the present value of the projected interest savings. A copy of the benefit analysis shall be maintained in the files of the Finance Department.

B. Provider Selection

The City or its financial advisor will undertake a competitive selection process when soliciting pricing for bond insurance, or in the case of a competitive sale, facilitating the prequalification of bonds by insurance providers. The City recognizes that all providers may not be interested in providing bids to the City or pre-qualifying the issue. The winning security dealer in a competitive sale will determine whether it will

purchase insurance for the issue. For a negotiated sale, the CFO shall have the authority to purchase bond insurance when deemed advantageous and the terms and conditions governing the guarantee are satisfactory.

II. Bank Facilities (Letters of Credit)

When used for credit enhancement, letters of credit ("LOC") represent a bank's promise to pay principal and interest when due for a defined period of time, subject to certain conditions. In the case of a direct-pay LOC, the trustee will draw upon the LOC to make debt service payments and the City will reimburse the LOC provider the amount drawn on the LOC by the trustee. A stand-by LOC is used to ensure the availability of funds to pay principal and interest of an obligation only if the funds in the debt service account held by the trustee are insufficient to make the debt service payment on the bonds.

DEBT MANAGEMENT PROCESS – STRUCTURAL FEATURES

I. Maturity

In general, final maturity of a bond sale shall be equal to or less than the remaining useful life of the assets being financed, and, in the case of tax-exempt debt, the average life of the financing shall not exceed 120% of the weighted-average useful life of the assets being financed.

II. Debt Service Structure

The Finance Department will carefully consider the debt service structure for each bond issue. Factors such as the flow of revenues available for a particular credit, the need to fill in gaps created by refunding specific principal maturities or to structure savings from a refunding in a particular year will be considered. Accelerated repayment may be considered within the bonding capacity constraints to provide capacity for future capital programs. Bonds will be amortized over a period of time not to exceed the useful life of the assets being financed.

III. Lien Levels

Senior, Junior and Subordinated Junior Liens for each revenue source will be utilized in a manner that will maximize the most critical constraint - typically either cost or capacity - thus allowing for the most beneficial use of the revenue source securing the bond.

IV. Capitalized Interest

Subject to Federal and State law, interest may be capitalized from the date of issuance of the debt. Interest may also be capitalized for projects in which the revenue designated to pay debt service on the bonds will be collected at a future date, not to exceed six months from estimated completion of construction. Any use of capitalized interest will require a review by bond counsel and approval by the CFO.

USE AND INVESTMENT OF BOND PROCEEDS

The City shall comply with all applicable Federal, State, and Indenture restrictions, if any, regarding the use and investment of bond proceeds. This includes compliance with any restrictions on the types of investment securities allowed, restrictions on the allowable yield of invested funds as well as restrictions on the time period over which some bond proceeds may be invested. The CFO, or his/her designee, will direct the investment of bond proceeds in accordance with the permitted investments for each particular bond issue. Investments such as guaranteed investment contracts may be considered when their use is in the best interest of the City and will be selected on a competitive basis.

In order to ensure proceeds of each debt issue will be directed to the intended use, the Finance Department shall establish internal control procedures related to the use and investment of bond proceeds. These procedures shall include ensuring such proceeds are held either (a) by a third-party trustee or fiscal agent, which will disburse such proceeds to or on the order of the City upon the submission of one or more written requisitions, or (b) by the City, to be held and accounted for in a separate fund or account, the expenditure of which will be carefully documented by the City.

CONTINUING DISCLOSURE

The City will comply with each of its undertakings entered into pursuant to Rule 15c2-12 of the Securities and Exchange Commission, by filing an annual report and annual financial information, as well as notice(s) of certain enumerated events specified in the applicable undertaking, with the Municipal Securities Rulemaking Board's Electronic Municipal Market Access System within the time periods specified therein.

ARBITRAGE REBATE

The City shall comply with all arbitrage rebate requirements as established by the Internal Revenue Service and the Finance Department shall establish a system of record keeping and reporting to meet the arbitrage rebate compliance requirements of the federal tax code. This effort shall include tracking project expenditures financed with bond proceeds, tracking investment earnings on bond proceeds, calculating rebate payments in compliance with tax law, and remitting any rebate earnings to the federal government in a timely manner in order to preserve the tax-exempt status of the City's outstanding tax-exempt debt issues. The CFO, or his/her designee, may enter into agreements with arbitrage service providers to assist the City with complying with arbitrage regulations.

POST ISSUANCE COMPLIANCE

The City shall comply with all applicable laws and regulations and with all governing legal documents applicable to each bond issue (e.g., indenture, fiscal agent agreement), to ensure the tax-exempt status of its bonds and compliance with its contractual obligations. In order to assist with post-issuance compliance related to its existing bonds, including as specified in this Debt Policy, the Finance Department shall maintain written procedures to document the processes used to ensure compliance, and shall specify the positions and individuals responsible for these processes.

APPENDIX A
SWAP POLICY

I. INTRODUCTION

The swap guidelines outlined herein are only intended to provide general procedural direction regarding the future use, procurement and execution of interest rate swaps and options. These guidelines are intended to relate to various interest rate hedging techniques, including the contractual exchange of different fixed and variable rate payment streams through interest rate swap agreements. The swap policies are not intended in any way to require the City to modify or terminate existing interest rate swaps. The City maintains the right to modify these guidelines and may make exceptions to any of them at any time in its sole discretion. Failure to comply in any manner with these swap guidelines shall not result in liability on the part of the City to any party.

II. APPROACH AND OBJECTIVES

Interest rate swaps and options are appropriate interest rate management tools that can help the City meet important financial objectives. Properly used, these instruments can increase the City's financial flexibility, provide opportunities for interest rate savings or enhanced investment yields, and help the City manage its balance sheet through better matching of assets and liabilities. Swaps should be integrated into the City's overall debt and investment management guidelines and should not be used for speculation.

Swaps are appropriate to use when they achieve a specific objective consistent with the City's overall financial strategies. Swaps may be used, for example, to lock-in a current market fixed rate or create additional variable rate exposure. Swaps may be used to produce interest rate savings, to alter the pattern of debt service payments, or for asset/liability matching purposes. Swaps may be used to cap, limit or hedge variable rate payments. Options granting the right to commence or cancel an underlying swap may be used to the extent the swap itself is consistent with these guidelines or the City determines there are other advantages to be derived in granting the option; however, the City must determine if the use of any such option is appropriate and warranted given the potential benefit, risks, and objectives of the City. The City's staff, together with its Bond Counsel and its Financial Advisor, periodically shall review the City's swap guidelines and recommend appropriate changes.

In connection with the use of any swaps, the City Council shall make a finding that, per Government Code Section 5922, the applicable swap is designed to reduce the amount or duration of the interest rate risk or result in a lower cost of borrowing when used in combination with the issuance or carrying of the Bonds or enhance the relationship between the risk and return with respect to the City's investments or program of investment, as applicable.

Rationales for Utilizing Interest Rate Swaps and Options

1. Optimize capital structure; including schedule of debt service payments and/or fixed vs. variable rate allocations
2. Achieve appropriate asset/liability match
3. Reduce risk, including:
    a. Interest rate risk;
    b. Tax risk; or
    c. Liquidity renewal risk
4. Provide greater financial flexibility
5. Generate interest rate savings
6. Enhance investment yields
7. Manage exposure to changing markets in advance of anticipated bond issuances (through the use of anticipatory hedging instruments)

III. PERMITTED INSTRUMENTS

The City may utilize the following financial products on a current or forward basis, after identifying the objective(s) to be realized and assessing the attendant risks.

1. Interest rate swaps, including fixed, floating and/or basis swaps.
2. Options, including swaptions, caps, floors, collars and/or cancellation or index-based features.

IV. PROCEDURE FOR SUBMISSION AND EXECUTION

Unsolicited proposals are to be mailed to the CFO and the Financial Advisor for evaluation. Such unsolicited proposals need to be received four weeks prior to the next City Council meeting for consideration at such meeting. For proposals received within four weeks of the next City Council meeting, the City reserves the right to consider the proposal at the following month's Council meeting.

Legal costs incurred in connection with an unsolicited proposal shall be paid by the firm submitting the proposal if for whatever reason the proposal does not close or should the City elect for any reason not to proceed. If the City elects to proceed with the proposed transaction and the proposed transaction closes, the City will absorb such legal costs through costs of issuance.

The City staff and the Financial Advisor shall review all unsolicited proposals prior to presentation to the City Council. The City shall only present proposals to the Council that the City, in its sole discretion, believes should be considered further given, for example, the projected savings or other benefits and the ability to meet one or more of the objectives outlined herein. Only proposals that meet the savings guidelines (as described in the "Guidelines for Financing and Selection of the Financing Team") or that the City staff find compelling for other reasons, shall be presented.

Procurement and Execution

The City will not have a fixed guideline with respect to swap procurement. The City will assess the benefits of competitively bidding financial products that are non-proprietary or generally available in the marketplace. On a product-by-product basis, the City will have the authority to negotiate the procurement of financial instruments that have customized or specific attributes designed on the City's behalf.

The use of financial derivative products will be recommended if they meet one of the benefits outlined herein or if they:

1. Provide a specific benefit not otherwise available;
2. Produce greater expected interest rate savings or incremental yield than cash market alternatives;
3. Are not speculative or do not create unreasonable leverage or risk;
4. Result in an improved capital structure or better asset/liability match; or
5. Reasonably pass the risk evaluation required by these guidelines

Conformance with Dodd-Frank

It is the intent of the City to conform this policy to the requirements relating to legislation and regulations for over-the-counter derivatives transactions under Title VII of the Wall Street Transparency and Accountability Act of 2010, as supplemented and amended from time to time (herein collectively referred to as "Dodd-Frank"). Pursuant to such intent, it is the policy of the City that: (i) each swap advisor engaged or to be engaged by the City will function as the designated qualified investment representative of the City, sometimes referred to as the "Designated QIR"; (ii) each swap advisor agrees to meet and meets the requirements specified in Commodity Futures Trading Commission Regulation 23.450(b)(1) or any successor regulation thereto (herein referred to as the "Representative Regulation"); (iii) each swap advisor provide a written certification to the City to the effect that such swap advisor agrees to meet and meets the requirements specified in the Representative Regulation; (iv) the City monitor the performance of each swap advisor consistent with the requirements specified in the Representative Regulation; (v) the City exercise independent judgment in consultation with its swap advisor in evaluating all recommendations, if any, presented by any counterparty with respect to transactions authorized pursuant to this Debt Policy; and (vi) the City rely on the advice of its swap advisor with respect to transactions authorized pursuant to this Debt Policy and not rely on recommendations, if any, presented by any counterparty with respect to transactions authorized pursuant to this Debt Policy.

Counter-Party Risk Assessment

The City will only do business with highly rated counter parties or counter parties whose obligations are supported by highly rated parties. The City will structure swap agreements to protect itself from credit deterioration of counter parties, including the use of credit support annexes or other forms of credit enhancement to secure counter

party performance. Such protection shall include any terms and conditions which in the City's sole discretion are necessary or appropriate or in the City's best interest.

The City shall enter into interest rate swap transactions only with qualified swap counter parties. Qualified swap counter parties are investment banks as will be identified by the Financial Advisor. Qualified swap counter parties should be rated at least "Aa3" or "AA-" by one of the nationally recognized rating agencies (i.e. Moody's, Standard and Poor's, and Fitch) and not rated lower than "A2" or "A" by any nationally recognized rating agency. In addition, the counter party must have a demonstrated record of successfully executing swap transactions as well as creating and implementing innovative ideas in the swap market. Each counter party shall have minimum capitalization of at least $150 million.

The City should not have an immutable credit standard. However, the City will attempt to do business with highly rated counter parties of "Aa3" or "AA-" or better. For lower rated (below "Aa3" or "AA-") counter parties, the City should seek credit enhancement in the form of:

1. Contingent credit support or enhancement; or
2. Collateral consistent with the policies contained herein

V. SWAP ANALYSIS AND PARTICIPANT REQUIREMENTS

In connection with any swap, the City and its Financial Advisor shall review the proposed transaction and outline any considerations associated with the transaction to the City Council. Such a review should include the following:

1. The identification of the proposed benefit and potential risks, which shall include, but not necessarily be limited to, those risks outlined herein
2. Independent analysis of potential savings from a proposed transaction
3. Fixed versus variable rate and swap exposure before and after the proposed transaction
4. Market Net Termination Exposure (as outlined herein) for all existing and proposed transactions at the City

Swap Risks

1. Counter party Risk – The risk of a payment default on a swap by an issuer's counter party
2. Termination Risk - The risk that a swap has a negative value and the issuer owes a "breakage" fee if the contract has to be liquidated
3. Tax Risk – A mismatch between changes in the rate or price on an issuer's underlying bonds and the swap caused by a reduction or elimination in the benefits of the tax exemption for municipal bonds, e.g. a tax cut, which results in an increase in the ratio of tax-exempt to taxable yields
4. Basis Risk – A mismatch between the rate on an issuer's underlying bonds and the rate paid under the swap, e.g. a tax-exempt variable rate issue which trades at 62% of LIBOR while the issuer only receives 60% of LIBOR under the swap
5. Tax Exemption Risk – The risk that the transaction may make the issuer's related bonds taxable
6. Liquidity/Remarketing Risk – The risk that an issuer cannot secure a cost-effective renewal of a Letter or Line of Credit or suffers a failed auction or remarketing with respect to its variable-rate bonds

Benefit Expectation

Financial transactions, using fixed rate swaps or other derivative products, should generate 2% greater projected savings than the savings guidelines (as described in the "Guidelines for Financing and Selection of the Financing Team") then in effect for traditional bonds. This threshold will serve as a guideline and will not apply should the transaction, in the City's sole judgment, help to meet any of the objectives outlined herein. The higher savings target reflects the greater complexity and higher risk of derivative financial instruments. At a minimum, such financial transactions should provide a savings of no less than 5% over refunded par regardless of the spread between the financial transaction and a traditional bond refunding.

For example, assuming a refunding of $100 million of existing bonds, a traditional fixed rate advance refunding that does not use derivative products would have a present value savings threshold of $5.0 million, which is 5.0% of the refunded par. If the refunding structure utilizes a derivative product, the threshold would be $7.0 million in present value savings, 7.0% of the refunded par. Therefore, the transaction utilizing a swap or other derivative product would have to generate an additional $2.0 million to meet the target.

For variable rate or other swap transactions that do not result in a fixed interest rate, the City will evaluate any additional value generated through the transaction in assessing the benefits of proceeding, including the ability to meet the objectives outlined herein. These benefits include, for example, reducing interest rate or tax risk, optimizing the capital structure or further reducing interest expense.

In determining any benefit in implementing a fixed-to-variable swap, the cost of remarketing, in addition to the cost of credit enhancement or liquidity fees must be added to the projected variable rate. Such a calculation should consider the trading performance of comparable bonds and any trading premium resulting from a specific form of credit enhancement or liquidity and/or any impact related to broader industry trends.

VI. LEGAL AND CONTRACTUAL REQUIREMENTS

Unless otherwise approved by Council, the City will use standard ISDA swap documentation including the Schedule to the Master Agreement and a Credit Support Annex. The City may use additional documentation if the product is proprietary or the City deems in its sole discretion that such documentation is otherwise in its interest.

Terms and Notional Amount of Swap Agreement

The City shall determine the appropriate term for an interest rate swap agreement on a case-by-case basis. In connection with the issuance or carrying of bonds, the term of the swap agreement between the City and a qualified swap counter party shall not extend beyond the final maturity date of existing debt of the City on the related Project, or in the case of a refunding transaction, beyond the final maturity of the refunding bonds. For purposes of calculating net exposure, credit shall be given to any fixed versus variable rate swaps that offset termination exposure for a specific Project or bond transaction. For variable rate transactions, credit may also be given for any assets that are used to hedge a transaction as long as in the City's judgment such assets are reasonably expected to remain in place on a coterminous basis with the swap.

Terms and conditions of any swap shall be negotiated by the City in the best interests of the City subject to the provisions of the Government Code and, unless otherwise waived or altered by the City, these guidelines. The swaps between the City and each counter party shall include, as appropriate, payment, term, security, collateral, default, remedy, termination, and other terms, conditions and provisions as the City, in consultation with its Bond Counsel and Financial Advisor, deems necessary or desirable.

Subject to the provisions contained herein, the City swap documentation and terms should include the following:

1. Downgrade provisions triggering termination shall in no event be worse than those affecting the counter party
2. Governing law for swaps will be New York law, but should reflect California authorization provisions
3. The specified indebtedness related to credit events in any swap agreement should be narrowly drafted and refer only to specific Project debt
4. Collateral thresholds should be set on a sliding scale reflective of credit ratings (see Collateral below)
5. Eligible collateral as set forth in the Collateral section below.

6. Termination value should be set by "market quotation" methodology, when the City deems appropriate
7. The City should only agree to an Additional Termination Event for the City to the extent that the ratings on the applicable the City bonds fall below a ratings trigger acceptable to the City and the counter party and no form of credit support or enhancement is in place

Termination Provision

All swap transactions shall contain provisions granting the City the right to optionally terminate a swap agreement at any time over the term of the agreement. Such a provision shall be required even if any termination is at market. In general, exercising the right to terminate an agreement should produce a benefit to the City, either through the receipt of a payment from a termination or, if the termination payment is made by the City, in conjunction with a conversion to a more beneficial (desirable) debt obligation of the City.

Collateral

As part of any swap agreement, the City shall require collateralization or other forms of credit enhancements to secure any or all swap payment obligations. As appropriate, the City, in consultation with its Bond Counsel and Financial Advisor, may require collateral or other credit enhancement to be posted by each swap counter party under the following circumstances:

1. Each counter party to the City may be required to post collateral if the credit rating of the counter party or parent falls below the "AAA" category. Additional collateral for further decreases in credit ratings of each counter party shall be posted by each counter party in accordance with the provisions contained in the collateral support agreement to each counter party with the City the City. Maximum un-collateralized exposure for: (i) "AAA" rated counter parties is $40 million; (ii) "AA" rated counter parties is $10 million; and (iii) below "AA" category, uncollateralized exposure is zero
2. Threshold amounts shall be determined by the City on a case-by-case basis. The City will determine the reasonable threshold limits for the initial deposit and for increments of collateral posting thereafter
3. Collateral shall be deposited with a third party trustee, or as mutually agreed upon between the City and the counter party
4. A list of acceptable securities that may be posted as collateral and the valuation of such collateral will be determined and mutually agreed upon during negotiation of the swap agreement with each swap counter party. A complete list of acceptable securities and valuation percentages are included as Attachment A
5. The market value of the collateral shall be determined on at least a monthly basis, or more frequently if the City determines it is in the City's best interest given the specific collateral security
6. It shall be determined on a case-by-case basis whether other forms of credit enhancement are more beneficial to the City

VII. LIMITATIONS ON TERMINATION EXPOSURE

In order to diversify the City's counter party credit risk, and to limit the City's credit exposure to any one counter party, limits will be established for each counter party based upon both the credit rating of the counter party as well as the relative level of risk associated with each existing and projected swap transaction. The guidelines below provide general termination exposure guidelines with respect to whether the City should enter into an additional transaction with an existing counter party. The City Council may make exceptions to the guidelines at any time to the extent that the execution of a swap achieves one or many of the goals outlined in these guidelines or provides other benefits to the City.

Such guidelines will also not mandate or otherwise force automatic termination by the City or the counter party. Maximum Net Termination Exposure is not intended to impose retroactively any terms and conditions on existing transactions. Such provisions will only act as guidelines in making a determination as to whether or not a proposed transaction should be executed given certain levels of existing and projected net termination exposure to a specific counter party. Additionally, the guidelines below are not intended to require retroactively additional collateral posting for existing transactions. Collateral posting guidelines are described in the "Collateral" section above. The calculation of net termination exposure per counter party will take into consideration multiple transactions, some of which may offset the overall exposure to the City.

Maximum Net Termination Exposure will be based on the sum of (i) the market value of existing transactions as of the first day of the month prior to the execution of any new transaction plus (ii) the expected worse case termination value of the new transaction. The maximum termination exposure will also be tied to the credit rating of a counter party and whether or not the counter party has posted collateral against this exposure.

Under this approach, the City will set limits on individual counter party exposure based on existing as well as new or proposed transactions. For existing transactions, exposure will be based on the market value as of the last quarterly swap valuation report provided by the Financial Advisor. For a new or proposed transaction, the City will calculate the projected maximum exposure based on the estimated maximum exposure assuming two standard deviations. Standard deviation is a statistic obtained by squaring the average difference from the mean of a distribution of numbers. Two standard deviations capture 95% of the population of a distribution of numbers. For purposes of the calculation, two standard deviations shall be calculated as the annualized standard deviation of weekly swap rates over the preceding 52 weeks. The time period may vary according to market conditions which could range from flat to volatile.

The sum of the existing market value and the projected maximum exposure shall constitute the Maximum Net Termination Exposure. For purposes of this calculation, the City shall include all existing and projected transactions of an individual counter party and

all transactions will be analyzed in aggregate such that the maximum exposure will be additive and netted on a per Project basis. The rationale behind aggregating and netting on a Project basis is that the exposure will vary for individual members depending on their participation in different Projects.

For example, if the City has $13.0 million (i.e. the City would owe termination payment) of exposure to a counter party, the Maximum Net Termination Exposure under the definition above, is the projected maximum termination exposure less the outstanding exposure. If projected maximum termination exposure on the proposed transaction, assuming two standard deviations, is $20 million, net termination exposure would be $7.0 million.

The exposure thresholds, which will be reviewed periodically to ensure that they remain appropriate, will also be tied to credit ratings of the counter parties and whether or not collateral has been posted. If collateral has been posted, the City cannot exceed $30.0 million of collateralized exposure. In addition, there would be a further limit on the amount of uncollateralized exposure, including any threshold amounts under the Credit Support Annex. For AAA-rated counter parties, the City could have up to $40.0 million of uncollateralized exposure; for counter parties in the AA category, the City could have up to $10.0 million of uncollateralized exposure and for counter parties below the AA category, the City could have no uncollateralized exposure. If a counter party has more than one rating, the lowest rating will govern for purposes of the calculating the level of exposure. A summary table is provided below.

Credit Ratings	Maximum Collateralized Exposure	Maximum Uncollateralized Exposure	Maximum Total Termination Exposure
AAA	NA	$40.0 million	$40.0 million
AA Category	$30.0 million	$10.0 million	$40.0 million
Below AA	$30.0 million	None	$30.0 million

Assuming the same example as above, if the counter party is currently rated “Aa2” and “AA+,” the exposure thresholds would only take effect if Net Termination Exposure increased an additional $3.0 million (from the original $7.0 million above).

If the exposure limit is exceeded by a counter party, the City shall conduct a review of the exposure limit per counter party. The City, in consultation with its Bond Counsel and Financial Advisor, shall explore remedial strategies to mitigate this exposure.

VIII. ONGOING MANAGEMENT

The City will seek to maximize the benefits and minimize the risks it carries by actively managing its swap program. This will entail frequent monitoring of market conditions, by

both the Financial Advisor and swap counter party, for emergent opportunities and risks. Active management may require modifications of existing positions including, for example:

1. Early termination;
2. Shortening or lengthening the term;
3. Sale or purchase of options; or
4. Use of basis swaps.

On an overall basis, the City's swap program is not expected to be very large relative to all of its investment and debt activities. Swaps will be used in response to particular market conditions and needs of the City for which swaps are the best investment or debt-management option.

IX. ONGOING REPORTING REQUIREMENTS

A written report providing the status of all interest rate swap agreements entered into by the City will be provided to the City Council on an annual basis (or other basis, if so directed by Council) and shall include the following:

1. A description of all outstanding interest rate swap agreements, including Project and bonds series, type of swap, rates paid and received by the City, total notional amount, average life of each swap agreement, remaining term of each swap agreement
2. Highlights of all material changes to swap agreements or new swap agreements entered into by the City since the last report
3. Termination Exposure of each of the City's interest rate swap agreements
4. The credit rating of each swap counter party and credit enhancer insuring swap payments, if any
5. If applicable, information concerning any default by a swap counter party to the City, including but not limited to the financial impact to the City, if any
6. If applicable, information concerning any default by the City to a swap counter party
7. A summary of swap agreements that were terminated or that have expired
8. For a swap transaction entered into to generate debt service savings, the City will calculate on an annual basis the actual debt service requirements versus the projected debt service on the swap transaction at the original time of execution. Such a calculation shall include a determination of the cumulative actual savings (or, if applicable, additional payments made by the City) versus the projected savings at the time the swap was executed

Attachment A – Acceptable Collateral

Security	Valuation Percentage
Cash	100%
Negotiable debt obligations issued by the U.S. Treasury Department or the Government National Mortgage Association ("Ginnie Mae"), or (y) mortgage backed securities issued by Ginnie Mae (but with respect to either (x) or (y) excluding interest only or principal only stripped securities, securities representing residual interests in mortgage pools, or securities that are not listed on a national securities exchange or regularly quoted in a national quotation service) and in each case having a remaining maturity of: (i) less than one year (ii) one year or greater but less than 10 years (iii) 10 years or greater	 100% 98% 95%
Negotiable debt obligations issued by the Federal Home Loan Mortgage Corporation ("Freddie Mac") or the Federal Home Loan Mortgage Association ("Fannie Mae") or (y) mortgage backed securities issued by Freddie Mac or Fannie Mae but excluding interest only or principal only stripped securities, securities representing residual interests in mortgage pools, or securities that are not listed on a national securities exchange or regularly quoted in a national quotation service	95%
Any other collateral acceptable to the City in its sole discretion. The valuation percentage shall be determined by the Valuation Agent from time to time and in its reasonable discretion	The valuation percentage shall be determined by the Valuation Agent from time to time and in its reasonable discretion.

For example, if a counter party is required to post $1.0 million of collateral and wished to use Ginnie Mae's with five years remaining to maturity, it would be required to post $1,020,409 ($1.0 million/0.98) to satisfy the collateral requirement.

City of Roseville
Debt Management Policy

Effective ~~July 1, 2016~~January 31~~_____~~, 2017

TABLE OF CONTENTS

INTRODUCTION 4

DEBT ISSUANCE 5

I. Types of Bond Sales 5

A. Competitive Sale 5

B. Negotiated Sale 5

C. Private Placement/Bank Direct Purchase (BDP) 5

II. Issuer Characteristics 5

A. Market Familiarity 6

B. Credit Strength 6

C. Policy Goals 6

III. Financing Characteristics 6

A. Type of Debt Instrument 6

B. Issue Size 6

C. Market Conditions and Timing 6

D. Story Bonds 7

FINANCIAL SERVICE PROVIDERS 7

I. Selection 7

II. Use of Independent Financial Advisors 7

III. Communication/Solicitation 8

DEBT MANAGEMENT PROCESS – TAX STATUS 8

I. Tax-Exempt 8

II. Taxable 8

DEBT MANAGEMENT PROCESS – TYPE OF DEBT 8

I. Fixed Rate Debt 8

II. Variable Rate Debt 9

III. Use of Alternative Debt Instruments 9

A. Derivative Products 9

DEBT MANAGEMENT PROCESS – DEBT CAPACITY 9

DEBT MANAGEMENT PROCESS – SECURITY OF DEBT 10

I. General Obligation (G.O.) Bonds 10

II. Revenue Bonds 10

III. Certificates of Participation (COP) Bonds 10
IV. Housing Bonds 10
V. Community Facilities District (CFD) Bonds 11
VI. Special Assessment Bonds 11
DEBT MANAGEMENT PROCESS – PURPOSE OF FINANCING 11
I. New Money Financing 11
II. Refunding Bonds 11
DEBT MANAGEMENT PROCESS - CREDIT RATINGS 12
I. Rating Agency Relationships 12
II. Use of Rating Agencies 12
DEBT MANAGEMENT PROCESS – CREDIT ENHANCEMENT 13
I. Bond Insurance 13
A. Benefit Analysis 13
B. Provider Selection 13
II. Bank Facilities (Letters of Credit) 14
DEBT MANAGEMENT PROCESS – STRUCTURAL FEATURES 14
I. Maturity 14
II. Debt Service Structure 14
III. Lien Levels 14
IV. Capitalized Interest 14
INVESTMENT OF BOND PROCEEDS 14
CONTINUING DISCLOSURE 15
ARBITRAGE REBATE 15
POST ISSUANCE COMPLIANCE 15
APPENDIX A 17
SWAP POLICY 17
~~APPENDIX B~~ 28
~~CFD GOALS AND POLICIES~~ 28
ATTACHMENT ~~1~~A 39

CITY OF ROSEVILLE
DEBT MANAGEMENT POLICY

INTRODUCTION

The Finance Department of the City of Roseville (the "City") has developed this Debt Management Policy (the "Debt Policy") to provide guidelines for the issuance of bonds and other forms of indebtedness to finance necessary land acquisitions, capital construction, equipment, and other items for the City.

While the issuance of debt is frequently an appropriate method of financing capital projects and major equipment acquisitions, such issuance must be carefully monitored to preserve the City's credit strength and to provide the necessary flexibility to fund future capital needs.

SCOPE

This Debt Policy shall govern, except as otherwise covered by the law, City Charter and City Code, the issuance and management of all debt and lease financings funded in the capital markets by or for the benefit of the City, the Roseville Finance Authority, the Natural Gas Financing Authority and/or the Successor Agency to the former Redevelopment Agency of the City of Roseville. As used herein, references to "City" shall include the applicable issuing entity, and references to "City Council" shall include the applicable issuing entity's governing body, as the context requires. While adherence to the Debt Policy is desired, the City recognizes that changes in the capital markets as well as unforeseen circumstances may from time to time produce situations that are not covered by the Debt Policy and may require modifications or exceptions to achieve City goals.

The City's Debt Policy shall be reviewed, and updated if necessary, on an annual basis. The Chief Financial Officer (CFO) with the assistance of the Finance Director and General Accounting staff shall have the responsibility and authority for structuring, implementing and managing the City's debt and financing program, in accordance with City Council authorizations.

OBJECTIVES AND POLICY GOALS

The City has earned some of the highest credit ratings in the nation and as a result receives some of the lowest possible interest rates on its debt. These low interest rates result in a lower overall cost of capital to the City. This Debt Policy will assist the City in determining appropriate uses of debt financing, establish certain debt management goals and assist the City in maintaining its high credit ratings, while assuming a prudent level of financial risk and preserving the City's flexibility to finance future capital programs and requirements. Additionally, this Debt Policy is intended to set forth criteria for selecting firms to provide certain financial, legal, and other

related services that will ensure that a fair and open selection process is used which provides opportunities for all qualified firms, including minority and women owned businesses.

DEBT ISSUANCE

There are three general methods of issuing debt obligations~~, a~~: competitive sale, negotiated sale and private placement.

I. Types of Bond Sales

A. Competitive Sale

In a competitive sale, security dealers submit bids either in a sealed bid or electronically secure process and the security dealer with the lowest True Interest Cost (TIC) and in compliance with the bid parameters is awarded the bonds.

B. Negotiated Sale

In a negotiated sale, an underwriter or underwriter syndicate is selected for a particular transaction, or to serve in a pool for a period of time, through a Request for Qualifications (RFQ) process or a Request for Proposal (RFP) process. The interest rate and underwriter's fee are negotiated prior to the sale, based on market conditions.

C. Private Placement/Bank Direct Purchase (BDP)

A private placement or bank direct purchase is a sale that is structured specifically for one purchaser, such as a mutual fund or a bank. BDPs are usually quicker and less expensive for municipalities than competitive or negotiated bond sales because they impose fewer requirements on the issuer. The interest rate may be a fixed or variable rate, as agreed between the issuer and purchaser. The term of the bonds may range from under 10 years to 15 years or not much longer, as agreed between the issuer and purchaser. The bonds may or may not be tax-exempt bonds for federal income tax purposes. If the CFO, or his/her designee, determines that it is in the best interest of the City from a cost or administrative standpoint, the Finance Department may negotiate financing terms with banks and financial institutions for specific borrowings.

It shall be the policy of the City to ensure the lowest risk and lowest overall interest rate to the City when issuing debt either through a competitive sale, negotiated sale or private placement, where appropriate. The City shall use the following criteria to determine whether a competitive or negotiated sale should be used.

II. Issuer Characteristics

A. Market Familiarity

A frequent issuer of a well-recognized credit such as general obligation bonds can generally sell these bonds through a competitive sale since investors and underwriters are familiar with the quality of the credit. A negotiated sale may be appropriate if extensive pre-marketing to investors is desired or required.

B. Credit Strength

The higher the credit quality of the bonds being issued, the more likely the bonds can be sold using a competitive sale due to the high demand for high quality municipal bonds. High quality credits fare well in competitive sales.

C. Policy Goals

A competitive sale does not provide the City with the flexibility of choosing the underwriter or underwriter syndicate. If the CFO concludes that determining the composition of the underwriter syndicate to achieve certain policy objectives is important, then a negotiated sale will be required. However, if the CFO selects the negotiated sale solely for policy reasons then the specific rationale and criteria for selection should clearly be specified.

III. Financing Characteristics

A. Type of Debt Instrument

The market favors familiar debt instruments such as general obligation bonds backed by the full faith and credit of the City or Mello-Roos bonds backed by special taxes levied within a community facilities district (CFD). New credit types may require an education process that is more conducive to a negotiated sale until the market becomes comfortable with the credit.

B. Issue Size

The size of the bond sale will influence both investor interest in the bonds and the market's ability to absorb the bonds. In general if the bond sale is too small or too large a negotiated sale may be necessary. A small sale may require greater marketing to garner investor interest while a large sale may be difficult for the market to absorb without the presale activity available in the negotiated sale process.

C. Market Conditions and Timing

During periods of stable interest rates, market timing is not as critical. However, during periods of volatile interest rates, the timing of the sale becomes more critical. Bond refundings are also often very interest rate sensitive in terms of the potential level of savings or the general feasibility of the refunding. The negotiated sale provides more flexibility in terms of the structure of the bond sale as well as

the timing of the bond sale and may be more appropriate when issuing refunding bonds and when interest rates are volatile.

D. Story Bonds

Bonds that require a detailed explanation due to the complexity of the credit or the repayment of the bonds are often referred to as "Story Bonds". Due to their complexity and the additional explanation these bonds require, an extensive pre-marketing campaign is necessary. Story Bonds often require a negotiated sale composed of an underwriting syndicate that is qualified to market the bonds in order to obtain the lowest financing cost for the City. An example may be a new CFD with a single landowner-developer or other credit characteristics that need to be explained to investors.

FINANCIAL SERVICE PROVIDERS

I. Selection

In connection with debt financings, financial advisors, underwriters, and other service providers will be selected from a Qualified Vendors List (QVL) developed through a periodic Request for Qualifications (RFQ) process or, for individual financings, through a Request for Proposals (RFP) process, whichever method is deemed most appropriate given the specifics of the financing. At the discretion of the CFO, contracts may be awarded on a sole source basis if it is clear that an RFQ/RFP process is not feasible or not in the best interest of the City.

For competitive sales, any security dealer meeting the qualification criteria outlined in the competitive bid notice may bid in the competitive sale. For negotiated sales, only those underwriters qualified under the RFQ/RFP process may be selected. Underwriters or underwriter syndicates will be selected by the CFO. The allocation of bonds among syndicate members will be at the sole discretion of the CFO with the approval of the City Manager or his/her designee.

II. Use of Independent Financial Advisors

The City will hire financial advisors who are independent. In the event the best available financial advisor is an investment banking firm, the firm will under no circumstances be permitted to participate as the lead underwriter or as a member of an underwriter syndicate that is bidding on the bonds for which the firm is acting as a financial advisor. In addition, if the firm has any profit sharing or other type of agreement with any member of the underwriting syndicate for the transaction in question, they will not be allowed to act as the financial advisor. In general, no agreement will be permitted that would compromise the firm's ability to provide independent advice or that could be reasonably perceived by the City as a conflict of interest. Advisors must alert the CFO, in writing, of any conflict, potential conflict, or potentially perceived conflict prior to entering into an

agreement with the City, or if occurring after entering into an agreement with the City, as soon as the conflict, potential conflict, or potentially perceived conflict arises.

III. Communication/Solicitation

All financial consultants, including all investment banking firms, financial advisors, bond counsel, and other consultants hired in connection with any bond transaction will direct all communications, solicitations and questions to the CFO or his/her designee. Underwriters are reminded that under Rule G-37 of the Municipal Securities Rulemaking Board (MSRB) that a firm may be banned from providing underwriting services to the City for two years for making any political contributions to elected City officials.

DEBT MANAGEMENT PROCESS – TAX STATUS

Prior to the issuance of any bonds, the Finance Department, in conjunction with bond counsel and the City Attorney's Office will evaluate the tax status of any bond sales.

I. Tax-Exempt

Interest on tax-exempt bonds is excluded from the gross income of its owners for federal income tax purposes and from California income taxes and as a result tax-exempt bonds can be sold at a lower true interest cost than taxable bonds. The City, along with bond counsel, will evaluate all projects to be funded to assess their eligibility to be funded by tax-exempt bonds. The City will make every effort to ensure that all tax regulations are complied with to ensure the bonds maintain their tax-exempt status.

II. Taxable

Certain municipal bonds are sold as taxable bonds because they are issued for purposes that the federal government deems do not provide a significant benefit to the public at large or involve "private activity". In addition, certain tax laws such as the alternative minimum tax (AMT) reduced the tax exemption applicable to certain types of bonds and to certain taxpayers. Taxable bonds will be used whenever a particular project has the potential for private activity or other uses that may call into question the eligibility to use tax-exempt financing.

DEBT MANAGEMENT PROCESS – TYPE OF DEBT

I. Fixed Rate Debt

Longer term debt usually consists of fixed interest rates over the term of the bonds and should be used to finance essential capital facilities, projects and certain equipment where it is appropriate to spread the cost of the project over more than one budget year and generally for a period not to exceed the useful life of the project being financed. In so doing, the City recognizes that future taxpayers who will benefit from the project will pay a share of its cost. Fixed rate debt provides the benefit of fixed payments during the life of the bonds and budget certainties for long-term capital planning. However, fixed

rate debt is typically longer term and carries higher interest payments (assuming an upward sloping yield curve) than variable rate debt but is not subject to changes in interest rates. Fixed rate debt is the most common type of debt issued by the City.

II. Variable Rate Debt

The municipal bond market has developed several vehicles by which municipalities can borrow at short-term, variable interest rates. Variable Rate Demand Notes may be issued with interest rates that "reset" daily, weekly, monthly or semiannually at the option of the City. Commercial paper is issued with a maturity of up to 270 days at the City's option. As the commercial paper matures, it is resold by a commercial paper dealer for another period up to 270 days.

These products are structured as a rolling series of short-term investments and therefore are priced at the short-end of the yield curve at lower interest rates than long-term fixed rate bonds (assuming an upward sloping yield curve). By accepting the risks inherent in variable interest rates, the City can take advantage of the lowest rates available in the current market.

Factors that will be considered in the use of variable rate debt are the availability and size of fund balances to cover variable rate risk, and the budget flexibility of the program being financed. Programs with large complex capital programs may use short-term financing to fund uncertain construction cash flow requirements. The short-term debt can be refinanced as fixed-rate, long term debt once the projects are complete. A project that must be carried in anticipation of grant funding may also be a candidate for the use of variable rate financing. Examples are the Electric, Water, and Wastewater enterprise funds.

III. Use of Alternative Debt Instruments

A. Derivative Products

The use of certain derivative products, such as swaps, swaptions and the sale of call options, allow the City to realize lower all-in costs on a new debt issuance or to receive an upfront payment. One type of swap that may be used would allow the City to issue variable rate debt in exchange for fixed payments that are typically lower than fixed rate debt. However, such products have unique risks that the City and its financial advisors will evaluate as per the City's Swap Policy. The current Swap Policy is included in Appendix A.

DEBT MANAGEMENT PROCESS – DEBT CAPACITY

The determination of how much indebtedness the City can afford begins by assessing the sufficiency of future revenues. The amount of debt issued is based on the requirements of the

approved 5-year CIP, subject to the condition that sufficient revenues are projected to be available, and each debt issuance shall take into account the capital improvements needs specified in the CIP and the City's current budget. Factors such as debt service coverage requirements outlined in the bond indentures, the impact on the citizens (tax rates), and any impact on the bond ratings will be carefully considered. Different factors are considered for each type of credit. For example, Revenue or Certificates of Participation bonds for electric, water and wastewater bonds will consider the impact on customer utility bills. In the case of general obligation debt, State Statutes and the Constitution limit the amount of debt that a municipality can have outstanding.

DEBT MANAGEMENT PROCESS – SECURITY OF DEBT

I. General Obligation (G.O.) Bonds

G.O. bonds are backed by the full-faith and credit of the City and are secured by ~~secondary~~ ad valorem property taxes.

II. Revenue Bonds

Revenue bonds are supported solely from charges and fees generated from specific Enterprise Funds. Accordingly, in order to preserve debt capacity and budget flexibility, the City will issue revenue bonds when an identifiable revenue stream can be dedicated to support the payment of debt service. The final maturity of revenue obligations will be determined by the expected life of the project to be financed and the revenues available to repay the debt. The City's various Enterprise Funds – Electric, Water, and Wastewater issue bonds backed by revenues of the enterprise. Revenue bonds are generally issued through the Roseville Finance Authority.

III. Certificates of Participation (COP) Bonds

COP bonds are an instrument evidencing a pro rata share in a specific pledged revenue stream, usually lease payments by the issuer that are typically subject to annual appropriation. The certificate generally entitles the holder to receive a share, or participation, in the payments from a particular project. The payments are passed through the lessor to the certificate holders. The lessor typically assigns the lease and the payments to a trustee, which then distributes the payments to the certificate holders.

IV. Housing Bonds

Tax-exempt housing bonds are an important source of capital, providing loans for single-family homeownership and rental housing for very-low, low and moderate-income individuals and families. The relatively low tax-exempt interest rates, combined with federal, state, and local housing assistance programs, provide the necessary subsidy to create a supply of much needed, below market interest-rate loans.

V. Community Facilities District (CFD) Bonds

CFD bonds are issued and backed entirely by a Community Facilities District established under State Statutes for the purpose of managing and financing public improvements within the district boundaries. Any CFDs established in the City are reviewed by the Finance Department and the Finance Department will supervise the issuance of the debt on behalf of the CFD with the CFD paying all costs of issuance including administrative support. The creation of a CFD must be approved by City Council and follow a detailed legal process. ~~Please refer to Appendix B for additional~~Guidance for the use of CFDs and issuance of bonds for CFDs can also be found in the City's ~~Goals~~ Guidelines and Policies concerning ~~CFD bonds~~the use of the Mello Roos Community Facilities Act of 1982.

VI. Special Assessment Bonds

Special assessment bonds are a special type of municipal bond used to fund development projects that benefit a discrete group of taxpayers within a special assessment district. Principal and interest owed on the bonds is paid from assessments on the property benefiting from the particular bond-funded project. The creation of an Assessment District must be approved by City Council and follow a detailed legal process.

DEBT MANAGEMENT PROCESS – PURPOSE OF FINANCING

Generally, financings may be undertaken to fund new projects ("new money financing") or to refund existing bonds.

I. New Money Financing

New money issues are those financings that generate funding for capital projects. These funds will be used for necessary land acquisitions, capital construction, equipment, and other items for the City. New money bond proceeds are generally not used to fund operational activities. The City also may use its commercial paper programs to provide interim new money funding. The commercial paper notes are retired upon receipt of bond proceeds from a long-term fixed rate financing.

II. Refunding Bonds

A periodic review of the City's outstanding debt will be undertaken by the Finance Department to determine refunding opportunities.

Refunding bonds are issued to retire all or a portion of an outstanding bond issue. Most typically this is done to refinance at a lower interest rate to reduce overall debt service. Alternatively, some refundings are undertaken for reasons other than to achieve cost

savings, such as to restructure debt service payments, to change the type of debt instruments being used, or to eliminate undesirable covenants.

In any event, a present value savings analysis must be prepared that identifies the economic effects of any refunding being considered by the City. The savings from any particular refunding candidate shall generally be at least 5% of the refunded par amount, net of all transaction expenses. This 5% savings target may be waived by the CFO, or his/her designee, upon a finding that such a refunding is in the City's best overall financial interest and shall not be applicable for refunding transactions that are not solely undertaken to achieve cost savings.

DEBT MANAGEMENT PROCESS - CREDIT RATINGS

The City seeks to obtain and maintain the highest possible credit ratings for all categories of short- and long-term debt. The City will not issue bonds that do not carry investment grade ratings.

I. Rating Agency Relationships

The CFO, or his/her designee, shall be responsible for maintaining relationships with rating agencies that assign ratings to the City's various debt obligations. This responsibility shall include coordinating meetings and presentations in conjunction with the issuance of debt. Full disclosure of operations and open lines of communication shall be maintained with the rating agencies used by the City.

II. Use of Rating Agencies

The City may obtain a rating from at least one nationally recognized rating agency on all new bond issues being sold in the public market. The CFO, or his/her designee, shall determine whether or not any additional ratings will be requested on a particular financing. The CFO, or his/her designee, shall determine which major rating agencies will be asked to provide a rating. Exceptions to this requirement, such as when using a private placement, are permissible, if warranted by the circumstances and approved by the CFO, or his/her designee.

The City and/or the financing team shall notify the rating agencies by telephone or through written correspondence when the City anticipates issuing bonds. Bond documentation shall be sent several weeks prior to the bond sale to the selected rating agencies in order to provide the rating agencies sufficient time to perform their review. A personal meeting with the selected rating agencies may be scheduled if, in the opinion of the CFO, or his/her designee, such a meeting is in the best interest of the City in order to obtain the highest possible credit rating.

The City shall make every reasonable effort to maintain or improve its high quality credit ratings.

The City may request an underlying rating and an insured rating on all bond issues utilizing bond insurance.

The City shall submit its audited comprehensive annual financial report to all rating agencies utilized by the City.

DEBT MANAGEMENT PROCESS – CREDIT ENHANCEMENT

Although the City has high credit ratings, credit enhancement through the use of bond insurance or a bank facility such as a letter of credit to strengthen the underlying credit rating of certain bonds may be financially beneficial. Bonds insured by insurers rated ~~AAA~~ higher than the bonds to be sold by the City will also receive the ~~AAA~~ insurer's rating, and thus be able to be sold at a lower interest rate. Bank facilities, such as letters of credit from highly rated banks, can also be used to provide credit enhancement.

I. Bond Insurance

Bond insurance will be considered when it provides an economic benefit to a particular bond maturity or entire issue. Bond insurance provides improved credit quality for the bonds as a result of the insurance provider's guarantee of the payment of principal and interest on the bonds. Because of the decreased risk of non-payment, investors are willing to purchase insured bonds at lower yields than uninsured bonds, thus providing the issuer with interest cost savings.

A. Benefit Analysis

The decision to use bond insurance is an economic decision. A benefit analysis compares the present value of the interest savings to the cost of the insurance premium. Insurance will be purchased when the premium cost is less than the present value of the projected interest savings. A copy of the benefit analysis shall be maintained in the files of the Finance Department.

B. Provider Selection

The City or its financial advisor will undertake a competitive selection process when soliciting pricing for bond insurance, or in the case of a competitive sale, facilitating the prequalification of bonds by insurance providers. The City recognizes that all providers may not be interested in providing bids to the City or pre-qualifying the issue. The winning security dealer in a competitive sale will determine whether it will purchase insurance for the issue. For a negotiated sale, the CFO shall have the authority to purchase bond insurance when deemed advantageous and the terms and conditions governing the guarantee are satisfactory.

II. Bank Facilities (Letters of Credit)

When used for credit enhancement, letters of credit ("LOC") represent a bank's promise to pay principal and interest when due for a defined period of time, subject to certain conditions. In the case of a direct-pay LOC, the trustee will draw upon the LOC to make debt service payments and the City will reimburse the LOC provider the amount drawn on the LOC by the trustee. A stand-by LOC is used to ensure the availability of funds to pay principal and interest of an obligation only if the funds in the debt service account held by the trustee are insufficient to make the debt service payment on the bonds.

DEBT MANAGEMENT PROCESS – STRUCTURAL FEATURES

I. Maturity

~~The~~ In general, final maturity of a bond sale shall be equal to or less than the remaining useful life of the assets being financed, and, in the case of tax-exempt debt, the average life of the financing shall not exceed 120% of the weighted-average useful life of the assets being financed.

II. Debt Service Structure

The Finance Department will carefully consider the debt service structure for each bond issue. Factors such as the flow of revenues available for a particular credit, the need to fill in gaps created by refunding specific principal maturities or to structure savings from a refunding in a particular year will be considered. Accelerated repayment may be considered within the bonding capacity constraints to provide capacity for future capital programs. Bonds will be amortized over a period of time not to exceed the useful life of the assets being financed.

III. Lien Levels

Senior, Junior and Subordinated Junior Liens for each revenue source will be utilized in a manner that will maximize the most critical constraint - typically either cost or capacity - thus allowing for the most beneficial use of the revenue source securing the bond.

IV. Capitalized Interest

Subject to Federal and State law, interest may be capitalized from the date of issuance of the debt. Interest may also be capitalized for projects in which the revenue designated to pay debt service on the bonds will be collected at a future date, not to exceed six months from estimated completion of construction. Any use of capitalized interest will require a review by bond counsel and approval by the CFO.

USE AND INVESTMENT OF BOND PROCEEDS

The City shall comply with all applicable Federal, State, and Indenture restrictions, if any, regarding the use and investment of bond proceeds. This includes compliance with any

restrictions on the types of investment securities allowed, restrictions on the allowable yield of invested funds as well as restrictions on the time period over which some bond proceeds may be invested. The CFO, or his/her designee, will direct the investment of bond proceeds in accordance with the permitted investments for each particular bond issue. Investments such as guaranteed investment contracts may be considered when their use is in the best interest of the City and will be selected on a competitive basis.

In order to ensure proceeds of each debt issue will be directed to the intended use, the Finance Department shall establish internal control procedures related to the use and investment of bond proceeds. These procedures shall include ensuring such proceeds are held either (a) by a third-party trustee or fiscal agent, which will disburse such proceeds to or on the order of the City upon the submission of one or more written requisitions, or (b) by the City, to be held and accounted for in a separate fund or account, the expenditure of which will be carefully documented by the City.

CONTINUING DISCLOSURE

The City will comply ~~when applicable with Rule 15(c)2-12~~ with each of its undertakings entered into pursuant to Rule 15c2-12 of the Securities and Exchange Commission, by filing an annual report and annual financial information, as well as notice(s) of certain enumerated events specified in the applicable undertaking, with the Municipal Securities Rulemaking Board's Electronic Municipal Market Access System within the time periods specified therein.

ARBITRAGE REBATE

The City shall comply with all arbitrage rebate requirements as established by the Internal Revenue Service and the Finance Department shall establish a system of record keeping and reporting to meet the arbitrage rebate compliance requirements of the federal tax code. This effort shall include tracking project expenditures financed with bond proceeds, tracking investment earnings on bond proceeds, calculating rebate payments in compliance with tax law, and remitting any rebate earnings to the federal government in a timely manner in order to preserve the tax-exempt status of the City's outstanding tax-exempt debt issues. The CFO, or his/her designee, may enter into agreements with arbitrage service providers to assist the City with complying with arbitrage regulations.

POST ISSUANCE COMPLIANCE

The City shall comply with all applicable laws and regulations and with all governing legal documents applicable to each bond issue (e.g., indenture, fiscal agent agreement), to ensure the

tax-exempt status of its bonds and compliance with its contractual obligations. ~~The~~ In order to assist with post-issuance compliance related to its existing bonds, including as specified in this Debt Policy, the Finance Department shall maintain written procedures to document the processes used to ensure compliance ~~with applicable laws and regulations~~, and shall specify the positions and individuals responsible for these processes.

APPENDIX A
SWAP POLICY

I. INTRODUCTION

The swap guidelines outlined herein are only intended to provide general procedural direction regarding the future use, procurement and execution of interest rate swaps and options. These guidelines are intended to relate to various interest rate hedging techniques, including the contractual exchange of different fixed and variable rate payment streams through interest rate swap agreements. The swap policies are not intended in any way to require the City to modify or terminate existing interest rate swaps. The City maintains the right to modify these guidelines and may make exceptions to any of them at any time in its sole discretion. Failure to comply in any manner with these swap guidelines shall not result in liability on the part of the City to any party.

II. APPROACH AND OBJECTIVES

Interest rate swaps and options are appropriate interest rate management tools that can help the City meet important financial objectives. Properly used, these instruments can increase the City's financial flexibility, provide opportunities for interest rate savings or enhanced investment yields, and help the City manage its balance sheet through better matching of assets and liabilities. Swaps should be integrated into the City's overall debt and investment management guidelines and should not be used for speculation.

Swaps are appropriate to use when they achieve a specific objective consistent with the City's overall financial strategies. Swaps may be used, for example, to lock-in a current market fixed rate or create additional variable rate exposure. Swaps may be used to produce interest rate savings, to alter the pattern of debt service payments, or for asset/liability matching purposes. Swaps may be used to cap, limit or hedge variable rate payments. Options granting the right to commence or cancel an underlying swap may be used to the extent the swap itself is consistent with these guidelines or the City determines there are other advantages to be derived in granting the option; however, the City must determine if the use of any such option is appropriate and warranted given the potential benefit, risks, and objectives of the City. The City's staff, together with its Bond Counsel and its Financial Advisor, periodically shall review the City's swap guidelines and recommend appropriate changes.

In connection with the use of any swaps, the City Council shall make a finding that, per Government Code Section 5922, the applicable swap is designed to reduce the amount or duration of the interest rate risk or result in a lower cost of borrowing when used in combination with the issuance or carrying of the Bonds or enhance the relationship between the risk and return with respect to the City's investments or program of investment, as applicable.

Rationales for Utilizing Interest Rate Swaps and Options

1. Optimize capital structure; including schedule of debt service payments and/or fixed vs. variable rate allocations
2. Achieve appropriate asset/liability match
3. Reduce risk, including:
    a. Interest rate risk;
    b. Tax risk; or
    c. Liquidity renewal risk
4. Provide greater financial flexibility
5. Generate interest rate savings
6. Enhance investment yields
7. Manage exposure to changing markets in advance of anticipated bond issuances (through the use of anticipatory hedging instruments)

III. PERMITTED INSTRUMENTS

The City may utilize the following financial products on a current or forward basis, after identifying the objective(s) to be realized and assessing the attendant risks.

1. Interest rate swaps, including fixed, floating and/or basis swaps.
2. Options, including swaptions, caps, floors, collars and/or cancellation or index-based features.

IV. PROCEDURE FOR SUBMISSION AND EXECUTION

Unsolicited proposals are to be mailed to the ~~City Treasurer~~CFO and the Financial Advisor for evaluation. Such unsolicited proposals need to be received four weeks prior to the next City Council meeting for consideration at such meeting. For proposals received within four weeks of the next City Council meeting, the City reserves the right to consider the proposal at the following month's Council meeting.

Legal costs incurred in connection with an unsolicited proposal shall be paid by the firm submitting the proposal if for whatever reason the proposal does not close or should the City elect for any reason not to proceed. If the City elects to proceed with the proposed transaction and the proposed transaction closes, the City will absorb such legal costs through costs of issuance.

The City staff and the Financial Advisor shall review all unsolicited proposals prior to presentation to the City Council. The City shall only present proposals to the Council that the City, in its sole discretion, believes should be considered further given, for example, the projected savings or other benefits and the ability to meet one or more of the objectives outlined herein. Only proposals that meet the savings guidelines (as described in the "Guidelines for Financing and Selection of the Financing Team") or that the City staff find compelling for other reasons, shall be presented.

Procurement and Execution

The City will not have a fixed guideline with respect to swap procurement. The City will assess the benefits of competitively bidding financial products that are non-proprietary or generally available in the marketplace. On a product-by-product basis, the City will have the authority to negotiate the procurement of financial instruments that have customized or specific attributes designed on the City's behalf.

The use of financial derivative products will be recommended if they meet one of the benefits outlined herein or if they:

1. Provide a specific benefit not otherwise available;
2. Produce greater expected interest rate savings or incremental yield than cash market alternatives;
3. Are not speculative or do not create unreasonable leverage or risk;
4. Result in an improved capital structure or better asset/liability match; or
5. Reasonably pass the risk evaluation required by these guidelines

Conformance with Dodd-Frank

It is the intent of the City to conform this policy to the requirements relating to legislation and regulations for over-the-counter derivatives transactions under Title VII of the Wall Street Transparency and Accountability Act of 2010, as supplemented and amended from time to time (herein collectively referred to as "Dodd-Frank"). Pursuant to such intent, it is the policy of the City that: (i) each swap advisor engaged or to be engaged by the City will function as the designated qualified investment representative of the City, sometimes referred to as the "Designated QIR"; (ii) each swap advisor agrees to meet and meets the requirements specified in Commodity Futures Trading Commission Regulation 23.450(b)(1) or any successor regulation thereto (herein referred to as the "Representative Regulation"); (iii) each swap advisor provide a written certification to the City to the effect that such swap advisor agrees to meet and meets the requirements specified in the Representative Regulation; (iv) the City monitor the performance of each swap advisor consistent with the requirements specified in the Representative Regulation; (v) the City exercise independent judgment in consultation with its swap advisor in evaluating all recommendations, if any, presented by any counterparty with respect to transactions authorized pursuant to this Debt Policy; and (vi) the City rely on the advice of its swap advisor with respect to transactions authorized pursuant to this Debt Policy and not rely on recommendations, if any, presented by any counterparty with respect to transactions authorized pursuant to this Debt Policy.

Counter-Party Risk Assessment

The City will only do business with highly rated counter parties or counter parties whose obligations are supported by highly rated parties. The City will structure swap agreements to protect itself from credit deterioration of counter parties, including the use of credit support annexes or other forms of credit enhancement to secure counter

party performance. Such protection shall include any terms and conditions which in the City's sole discretion are necessary or appropriate or in the City's best interest.

The City shall enter into interest rate swap transactions only with qualified swap counter parties. Qualified swap counter parties are investment banks as will be identified by the Financial Advisor. Qualified swap counter parties should be rated at least "Aa3" or "AA-" by one of the nationally recognized rating agencies (i.e. Moody's, Standard and Poor's, and Fitch) and not rated lower than "A2" or "A" by any nationally recognized rating agency. In addition, the counter party must have a demonstrated record of successfully executing swap transactions as well as creating and implementing innovative ideas in the swap market. Each counter party shall have minimum capitalization of at least $150 million.

The City should not have an immutable credit standard. However, the City will attempt to do business with highly rated counter parties of "Aa3" or "AA-" or better. For lower rated (below "Aa3" or "AA-") counter parties, the City should seek credit enhancement in the form of:

1. Contingent credit support or enhancement; or
2. Collateral consistent with the policies contained herein

V. SWAP ANALYSIS AND PARTICIPANT REQUIREMENTS

In connection with any swap, the City and its Financial Advisor shall review the proposed transaction and outline any considerations associated with the transaction to the City Council. Such a review should include the following:

1. The identification of the proposed benefit and potential risks, which shall include, but not necessarily be limited to, those risks outlined herein
2. Independent analysis of potential savings from a proposed transaction
3. Fixed versus variable rate and swap exposure before and after the proposed transaction
4. Market Net Termination Exposure (as outlined herein) for all existing and proposed transactions at the City

Swap Risks

1. Counter party Risk – The risk of a payment default on a swap by an issuer's counter party
2. Termination Risk - The risk that a swap has a negative value and the issuer owes a "breakage" fee if the contract has to be liquidated
3. Tax Risk – A mismatch between changes in the rate or price on an issuer's underlying bonds and the swap caused by a reduction or elimination in the benefits of the tax exemption for municipal bonds, e.g. a tax cut, which results in an increase in the ratio of tax-exempt to taxable yields
4. Basis Risk – A mismatch between the rate on an issuer's underlying bonds and the rate paid under the swap, e.g. a tax-exempt variable rate issue which trades at 62% of LIBOR while the issuer only receives 60% of LIBOR under the swap
5. Tax Exemption Risk – The risk that the transaction may make the issuer's related bonds taxable
6. Liquidity/Remarketing Risk – The risk that an issuer cannot secure a cost-effective renewal of a Letter or Line of Credit or suffers a failed auction or remarketing with respect to its variable-rate bonds

Benefit Expectation

Financial transactions, using fixed rate swaps or other derivative products, should generate 2% greater projected savings than the savings guidelines (as described in the "Guidelines for Financing and Selection of the Financing Team") then in effect for traditional bonds. This threshold will serve as a guideline and will not apply should the transaction, in the City's sole judgment, help to meet any of the objectives outlined herein. The higher savings target reflects the greater complexity and higher risk of derivative financial instruments. At a minimum, such financial transactions should provide a savings of no less than 5% over refunded par regardless of the spread between the financial transaction and a traditional bond refunding.

For example, assuming a refunding of $100 million of existing bonds, a traditional fixed rate advance refunding that does not use derivative products would have a present value savings threshold of $5.0 million, which is 5.0% of the refunded par. If the refunding structure utilizes a derivative product, the threshold would be $7.0 million in present value savings, 7.0% of the refunded par. Therefore, the transaction utilizing a swap or other derivative product would have to generate an additional $2.0 million to meet the target.

For variable rate or other swap transactions that do not result in a fixed interest rate, the City will evaluate any additional value generated through the transaction in assessing the benefits of proceeding, including the ability to meet the objectives outlined herein. These benefits include, for example, reducing interest rate or tax risk, optimizing the capital structure or further reducing interest expense.

In determining any benefit in implementing a fixed-to-variable swap, the cost of remarketing, in addition to the cost of credit enhancement or liquidity fees must be added to the projected variable rate. Such a calculation should consider the trading performance of comparable bonds and any trading premium resulting from a specific form of credit enhancement or liquidity and/or any impact related to broader industry trends.

VI. LEGAL AND CONTRACTUAL REQUIREMENTS

Unless otherwise approved by Council, the City will use standard ISDA swap documentation including the Schedule to the Master Agreement and a Credit Support Annex. The City may use additional documentation if the product is proprietary or the City deems in its sole discretion that such documentation is otherwise in its interest.

Terms and Notional Amount of Swap Agreement

The City shall determine the appropriate term for an interest rate swap agreement on a case-by-case basis. In connection with the issuance or carrying of bonds, the term of the swap agreement between the City and a qualified swap counter party shall not extend beyond the final maturity date of existing debt of the City on the related Project, or in the case of a refunding transaction, beyond the final maturity of the refunding bonds. For purposes of calculating net exposure, credit shall be given to any fixed versus variable rate swaps that offset termination exposure for a specific Project or bond transaction. For variable rate transactions, credit may also be given for any assets that are used to hedge a transaction as long as in the City's judgment such assets are reasonably expected to remain in place on a coterminous basis with the swap.

Terms and conditions of any swap shall be negotiated by the City in the best interests of the City subject to the provisions of the Government Code and, unless otherwise waived or altered by the City, these guidelines. The swaps between the City and each counter party shall include, as appropriate, payment, term, security, collateral, default, remedy, termination, and other terms, conditions and provisions as the City, in consultation with its Bond Counsel and Financial Advisor, deems necessary or desirable.

Subject to the provisions contained herein, the City swap documentation and terms should include the following:

1. Downgrade provisions triggering termination shall in no event be worse than those affecting the counter party
2. Governing law for swaps will be New York law, but should reflect California authorization provisions
3. The specified indebtedness related to credit events in any swap agreement should be narrowly drafted and refer only to specific Project debt
4. Collateral thresholds should be set on a sliding scale reflective of credit ratings (see Collateral below)
5. Eligible collateral as set forth in the Collateral section below.

6. Termination value should be set by "market quotation" methodology, when the City deems appropriate
7. The City should only agree to an Additional Termination Event for the City to the extent that the ratings on the applicable the City bonds fall below a ratings trigger acceptable to the City and the counter party and no form of credit support or enhancement is in place

Termination Provision

All swap transactions shall contain provisions granting the City the right to optionally terminate a swap agreement at any time over the term of the agreement. Such a provision shall be required even if any termination is at market. In general, exercising the right to terminate an agreement should produce a benefit to the City, either through the receipt of a payment from a termination or, if the termination payment is made by the City, in conjunction with a conversion to a more beneficial (desirable) debt obligation of the City.

Collateral

As part of any swap agreement, the City shall require collateralization or other forms of credit enhancements to secure any or all swap payment obligations. As appropriate, the City, in consultation with its Bond Counsel and Financial Advisor, may require collateral or other credit enhancement to be posted by each swap counter party under the following circumstances:

1. Each counter party to the City may be required to post collateral if the credit rating of the counter party or parent falls below the "AAA" category. Additional collateral for further decreases in credit ratings of each counter party shall be posted by each counter party in accordance with the provisions contained in the collateral support agreement to each counter party with the City the City. Maximum un-collateralized exposure for: (i) "AAA" rated counter parties is $40 million; (ii) "AA" rated counter parties is $10 million; and (iii) below "AA" category, uncollateralized exposure is zero
2. Threshold amounts shall be determined by the City on a case-by-case basis. The City will determine the reasonable threshold limits for the initial deposit and for increments of collateral posting thereafter
3. Collateral shall be deposited with a third party trustee, or as mutually agreed upon between the City and the counter party
4. A list of acceptable securities that may be posted as collateral and the valuation of such collateral will be determined and mutually agreed upon during negotiation of the swap agreement with each swap counter party. A complete list of acceptable securities and valuation percentages are included as Attachment A
5. The market value of the collateral shall be determined on at least a monthly basis, or more frequently if the City determines it is in the City's best interest given the specific collateral security
6. It shall be determined on a case-by-case basis whether other forms of credit enhancement are more beneficial to the City

VII. LIMITATIONS ON TERMINATION EXPOSURE

In order to diversify the City's counter party credit risk, and to limit the City's credit exposure to any one counter party, limits will be established for each counter party based upon both the credit rating of the counter party as well as the relative level of risk associated with each existing and projected swap transaction. The guidelines below provide general termination exposure guidelines with respect to whether the City should enter into an additional transaction with an existing counter party. The City Council may make exceptions to the guidelines at any time to the extent that the execution of a swap achieves one or many of the goals outlined in these guidelines or provides other benefits to the City.

Such guidelines will also not mandate or otherwise force automatic termination by the City or the counter party. Maximum Net Termination Exposure is not intended to impose retroactively any terms and conditions on existing transactions. Such provisions will only act as guidelines in making a determination as to whether or not a proposed transaction should be executed given certain levels of existing and projected net termination exposure to a specific counter party. Additionally, the guidelines below are not intended to require retroactively additional collateral posting for existing transactions. Collateral posting guidelines are described in the "Collateral" section above. The calculation of net termination exposure per counter party will take into consideration multiple transactions, some of which may offset the overall exposure to the City.

Maximum Net Termination Exposure will be based on the sum of (i) the market value of existing transactions as of the first day of the month prior to the execution of any new transaction plus (ii) the expected worse case termination value of the new transaction. The maximum termination exposure will also be tied to the credit rating of a counter party and whether or not the counter party has posted collateral against this exposure.

Under this approach, the City will set limits on individual counter party exposure based on existing as well as new or proposed transactions. For existing transactions, exposure will be based on the market value as of the last quarterly swap valuation report provided by the Financial Advisor. For a new or proposed transaction, the City will calculate the projected maximum exposure based on the estimated maximum exposure assuming two standard deviations. Standard deviation is a statistic obtained by squaring the average difference from the mean of a distribution of numbers. Two standard deviations capture 95% of the population of a distribution of numbers. For purposes of the calculation, two standard deviations shall be calculated as the annualized standard deviation of weekly swap rates over the preceding 52 weeks. The time period may vary according to market conditions which could range from flat to volatile.

The sum of the existing market value and the projected maximum exposure shall constitute the Maximum Net Termination Exposure. For purposes of this calculation, the City shall include all existing and projected transactions of an individual counter party and

all transactions will be analyzed in aggregate such that the maximum exposure will be additive and netted on a per Project basis. The rationale behind aggregating and netting on a Project basis is that the exposure will vary for individual members depending on their participation in different Projects.

For example, if the City has $13.0 million (i.e. the City would owe termination payment) of exposure to a counter party, the Maximum Net Termination Exposure under the definition above, is the projected maximum termination exposure less the outstanding exposure. If projected maximum termination exposure on the proposed transaction, assuming two standard deviations, is $20 million, net termination exposure would be $7.0 million.

The exposure thresholds, which will be reviewed periodically to ensure that they remain appropriate, will also be tied to credit ratings of the counter parties and whether or not collateral has been posted. If collateral has been posted, the City cannot exceed $30.0 million of collateralized exposure. In addition, there would be a further limit on the amount of uncollateralized exposure, including any threshold amounts under the Credit Support Annex. For AAA-rated counter parties, the City could have up to $40.0 million of uncollateralized exposure; for counter parties in the AA category, the City could have up to $10.0 million of uncollateralized exposure and for counter parties below the AA category, the City could have no uncollateralized exposure. If a counter party has more than one rating, the lowest rating will govern for purposes of the calculating the level of exposure. A summary table is provided below.

Credit Ratings	Maximum Collateralized Exposure	Maximum Uncollateralized Exposure	Maximum Total Termination Exposure
AAA	NA	$40.0 million	$40.0 million
AA Category	$30.0 million	$10.0 million	$40.0 million
Below AA	$30.0 million	None	$30.0 million

Assuming the same example as above, if the counter party is currently rated “Aa2” and “AA+,” the exposure thresholds would only take effect if Net Termination Exposure increased an additional $3.0 million (from the original $7.0 million above).

If the exposure limit is exceeded by a counter party, the City shall conduct a review of the exposure limit per counter party. The City, in consultation with its Bond Counsel and Financial Advisor, shall explore remedial strategies to mitigate this exposure.

VIII. ONGOING MANAGEMENT

The City will seek to maximize the benefits and minimize the risks it carries by actively managing its swap program. This will entail frequent monitoring of market conditions, by

both the Financial Advisor and swap counter party, for emergent opportunities and risks. Active management may require modifications of existing positions including, for example:

1. Early termination;
2. Shortening or lengthening the term;
3. Sale or purchase of options; or
4. Use of basis swaps.

On an overall basis, the City's swap program is not expected to be very large relative to all of its investment and debt activities. Swaps will be used in response to particular market conditions and needs of the City for which swaps are the best investment or debt-management option.

IX. ONGOING REPORTING REQUIREMENTS

A written report providing the status of all interest rate swap agreements entered into by the City will be provided to the City Council on an annual basis (or other basis, if so directed by Council) and shall include the following:

1. A description of all outstanding interest rate swap agreements, including Project and bonds series, type of swap, rates paid and received by the City, total notional amount, average life of each swap agreement, remaining term of each swap agreement
2. Highlights of all material changes to swap agreements or new swap agreements entered into by the City since the last report
3. Termination Exposure of each of the City's interest rate swap agreements
4. The credit rating of each swap counter party and credit enhancer insuring swap payments, if any
5. If applicable, information concerning any default by a swap counter party to the City, including but not limited to the financial impact to the City, if any
6. If applicable, information concerning any default by the City to a swap counter party
7. A summary of swap agreements that were terminated or that have expired
8. For a swap transaction entered into to generate debt service savings, the City will calculate on an annual basis the actual debt service requirements versus the projected debt service on the swap transaction at the original time of execution. Such a calculation shall include a determination of the cumulative actual savings (or, if applicable, additional payments made by the City) versus the projected savings at the time the swap was executed

Attachment A – Acceptable Collateral

Security	Valuation Percentage
Cash	100%
Negotiable debt obligations issued by the U.S. Treasury Department or the Government National Mortgage Association ("Ginnie Mae"), or (y) mortgage backed securities issued by Ginnie Mae (but with respect to either (x) or (y) excluding interest only or principal only stripped securities, securities representing residual interests in mortgage pools, or securities that are not listed on a national securities exchange or regularly quoted in a national quotation service) and in each case having a remaining maturity of: (i) less than one year (ii) one year or greater but less than 10 years (iii) 10 years or greater	 100% 98% 95%
Negotiable debt obligations issued by the Federal Home Loan Mortgage Corporation ("Freddie Mac") or the Federal Home Loan Mortgage Association ("Fannie Mae") or (y) mortgage backed securities issued by Freddie Mac or Fannie Mae but excluding interest only or principal only stripped securities, securities representing residual interests in mortgage pools, or securities that are not listed on a national securities exchange or regularly quoted in a national quotation service	95%
Any other collateral acceptable to the City in its sole discretion. The valuation percentage shall be determined by the Valuation Agent from time to time and in its reasonable discretion	The valuation percentage shall be determined by the Valuation Agent from time to time and in its reasonable discretion.

For example, if a counter party is required to post $1.0 million of collateral and wished to use Ginnie Mae's with five years remaining to maturity, it would be required to post $1,020,409 ($1.0 million/0.98) to satisfy the collateral requirement.

APPENDIX B
CFD GOALS AND POLICIES

See attached. [Monty – I know we helped you update the Mello-Roos Act Guidelines in 2016; were those ever adopted? The provisions below looked different, so we should just attach or cross-reference the document from last year here.]

INTRODUCTION

The purpose of these CFD Goals and Policies is to establish for the City (the "City") a format to establish the public benefit and guidelines for the financial aspects of Community Facilities Districts. The underlying principles behind the proposed policies are public interest and benefit, fairness to current and future property and homeowners, avoidance of future failure of the project and/or property owner protest, protection of the City's financial position, and reimbursement to the City of its incurred expenses.

Community Facilities District laws are found in the Mello-Roos Community Facilities Act of 1982 in the California Government Code, beginning at Section 53311. These Goals and Procedures are adopted by the City in compliance with Section 53312.7 of the Government Code.

1. GOALS & POLICIES

The City has developed the following Goals and Policies on financing facilities and/or services through the formation of Community Facilities Districts, including financing public facilities through the issuance of debt to be repaid from proceeds of Special Taxes levied within the districts. It is the City's goal to support projects which address a public need and provide a public benefit. Proposed projects requesting Community Facility District debt financing will be evaluated to determine if such financing is financially viable and in the best interest of the City and current and future City and project residents.

The City may consider Facilities or Services District formation on its own initiative and also will consider developer or property owner initiated applications requesting the formation of Community Facilities Districts and the issuance of bonds to finance eligible public facilities necessary to serve newly developing commercial, industrial and residential projects in the following instances:

(1) When tax exempt financing of project public facilities will result in a significant public benefit; and/or

(2) When the City has negotiated and executed a Development Agreement addressing project implementation; and/or

(3) When City-based needs and circumstances warrant financing public services or facilities through a special tax to provide significant public benefit.

Generally, community serving public facilities will be eligible for this tax exempt financing program. Facilities will be financed and districts formed in accordance with the then current provisions of the Mello-Roos Community Facilities Act of 1982, as amended, or any other methodology legally available to the City to finance such improvements.

Each time public facilities are to be built or accepted by the City a community facilities is formed for the benefit of a development project, and maintenance requirements will exceed normal City standards, the City will require the creation of a maintenance district, services district or Home/Property Owners Association suitable to provide such needs. The maintenance or services district may be established pursuant to the provisions of the Mello-Roos Community Facilities Act of 1982, or any other methodology legally available to the City to finance such maintenance. The purpose of the services/maintenance district is to fund all or a portion of the ongoing costs of parks and open space, public landscaping, police and fire protection services and library services and maintenance; and/or to pay for any unfunded ongoing City maintenance or service costs associated with the development project.

Existing neighborhoods may petition the City for the use of financing to fund local or neighborhood serving services and/or facilities in accordance with the Mello-Roos Community Facilities Act of 1982.

The City shall make the determination as to whether a proposed district shall proceed under the provisions of the Mello-Roos Community Facilities Act of 1982, or any other methodology legally available to the City to finance improvements, services or maintenance. The City may confer with consultants and the applicant to learn of any unique district requirements such as facilities or services serving the regional area or long-term development phasing prior to making any final determination.

All City and consultant costs incurred in the evaluation of new development district applications and the establishment of districts will be paid by the applicant(s) ('petitioner(s)') by advance deposit increments. The City shall not incur any non-reimbursable expense for processing Community Facilities Districts. Expenses not chargeable to the district shall be borne by the applicant(s).

2. DEFINITIONS

Unless the context otherwise requires, the terms employed in the following policies shall have the meanings specified below:

"Bonds" means bonds authorized and issued under the Mello-Roos Community Facilities Act of 1982.

"City" means the City.

"District" means a Community Facilities District formed under the Mello-Roos Community Facilities Act of 1982.

"Pay-As-You-Go Basis" means the use of annual and/or one-time Special Tax revenues to directly fund the acquisition, construction, improvement of Public Facilities.

"Public Facilities" means improvements authorized to be constructed or acquired under the Mello-Roos Community Facilities Act including, but not limited to, costs for specified capital facilities imposed by public agencies as a condition to approval of the development encompassed by the district or as a condition to service the district, which may include, but is not limited to infrastructure improvements such as major streets and arterials; highway improvements and freeways; freeway interchanges; right of way acquisitions; bridges, water sewer and drainage improvements; landscape irrigation and drainage facilities; environmental mitigation and remediation; bicycle and pedestrian facilities; parks; wetlands; electrical conduits; transit improvements; and other improvements which are defined as authorized improvements under the Community Facilities District (s) selected by the City or any ordinance under the City.

"Value" or "Fair Market Value" means the amount of cash or its equivalent which a property would bring if exposed for sale in the open market under conditions in which neither buyer nor seller could take advantage of a difficulty of the other, both having knowledge of all of the uses and purposes to which the property is adapted, and for which it is capable of being used and of the enforceable restrictions upon its uses and purposes.

3. ELIGIBLE PUBLIC FACILITIES AND SERVICES

Infrastructure and public facilities eligible for district financing are those improvements which benefit properties within a proposed development, and/or will mitigate impacts of that development upon areas of the City outside the proposed development, and which will be owned, operated and maintained by the City or another public agency approved by the City.

The City has final determination as to any facility's eligibility for financing as well as the prioritization of facilities to be included within a financing district. Generally, "in-tract" (i.e., local streets) improvements will not be considered eligible.

If a school is financed, the school district's goals and policies, if any, including its priority access policy will be coordinated with the formation of a district.

~~Public services eligible for district financing are those public services which benefit properties within a proposed development or area of the City subject to the special tax, subject to the limitation that a Community Facilities District tax approved by vote of the landowners of the district may only finance services to the extent that they are in addition to those provided in the territory of the district before the district was created.~~

~~4. VALUE-TO-LIEN RATIO~~

~~The City may sell bonds for the district only if it determines that the value of the real property that would be subject to the special tax to pay debt service will be at least three (3) times the principal amount of the bonds to be sold and the principal amount of all other bonds outstanding that are secured by a special tax or bonded special assessment. Such determination will be based upon the full cash value as shown on the ad valorem assessment roll or upon an appraisal of the subject property made in a manner consistent with policies of the City. Requirements of a higher value to lien ratio may be imposed by the City and will be determined by City staff with recommendations from bond counsel, financial advisor, and the underwriter, with consideration of the facts pertaining to each particular project, including diversification of land ownership. Each project will be considered on its own merits. Additionally, the aggregate value to lien ratio of no more than five percent (5%) of the parcels expected to be subject to special taxes to pay debt service shall be below 3:1 or such higher ratio as determined by the City. The CFO may allow exceptions to its value to lien ratio requirements in accordance with the Mello Roos Act if he/she can find and determine that the proposed bonds do not present any unusual credit risk due to the availability of credit enhancements or for other reasons determined.~~

~~The appraisal shall be coordinated by, under the direction of, and addressed to the City. All costs associated with the preparation of the appraisal report shall be paid by the applicant through the advance deposit mechanism. The appraisal shall be conducted in accordance with criteria, standards and assumptions established by the City, based upon the recommendations for each specific project received from the underwriter and financial advisor designated by the City. In every case, the appraisal shall reflect recognized appraisal standards for land-secured bond financing. The City prefers that the appraisal be prepared in accordance with the recommendations of the California Debt Advisory Commission as contained in the Appraisal Standards for Land-Based Secured Financings, and deviations therefrom will only be considered upon recommendation from bond counsel, financial advisor, the underwriter and/or the appraiser, with consideration of the facts pertaining to each particular project. In the case of a phased development, land value appraisal should include the developed land value assuming the infrastructure to be included in the current financing is completed. However, land values for remaining future phases of the development should not assume future infrastructure is completed.~~

5. MARKET ABSORPTION STUDY

The City may require a market absorption study, and may retain a consultant to prepare a report to verify market absorption assumptions and projected sales prices of the properties subject to the special taxes in the district. The study, if required, shall include an estimate of the total number of units, land uses and rate of absorption, and will be used as a basis for verification that sufficient revenues can be generated, and to determine if the financing of the infrastructure and public facilities is appropriate given the projected level and pace of development. All City and consultant costs incurred for this study will be paid by the applicant by advance deposit or out of special taxes or bond proceeds.

The study will also be provided to the appraiser for use in the appraisal process. The market absorption study should be completed prior to completion of the appraisal, and the appraisal shall take into consideration and reasonably reconcile to the conclusions of the market absorption study or include reasons for significant alternate conclusions.

6. SECURITY

For new development, the applicant or property owner must demonstrate its financial plan and ability to pay all special taxes before full build-out has taken place to the satisfaction of the City. Additional security such as credit enhancement may be required by the City in its sole discretion in certain instances.

If the City requires letters of credit or other credit enhancement, the credit enhancement shall be issued by an institution in a form and upon terms and conditions satisfactory to the City. All fees payable on the letter of credit or other security shall be the sole responsibility of the district applicant or developer, not the City or district. Any security required to be provided by the applicant shall be discharged by the City upon the opinion of a qualified appraiser retained by the City that the value-to-lien ratio has reached an acceptable level as determined by the City or upon meeting other credit criteria established by the City.

As an alternative to providing security, depending on circumstances:

A. A portion of the bond proceeds may be placed in escrow with a corporate agent in an amount sufficient to assure an acceptable value-to-lien ratio is reached on the escrowed proceeds. The escrowed proceeds shall be released at such times and in such amounts as will assure an acceptable value-to-lien ratio with regard to the aggregate outstanding bonds and other covenants; or

B. The bonds may be issued in series with each series in an amount sufficient to assure an acceptable value-to-lien ratio with regard to the aggregate outstanding bonds and other covenants.

7. SPECIAL TAX FORMULA

The special tax formula for each district shall adhere to the following requirements:

A. The maximum special tax shall include the annual costs incurred by the City to administer the district, including debt service, City and County administrative expenses and delinquency coverage in an amount determined appropriate by City staff.

B. The special tax formula shall establish tax rates which correspond to the expected land use designation of each parcel.

C. The special tax formula shall be structured to ensure sufficient funds to pay for annual debt service and administrative expenses of the district.

D. A backup special tax or other mechanism to protect against changes in densities resulting in insufficient annual special tax revenues to pay annual debt service and administrative expenses shall be required.

E. The City may, at its sole discretion, provide for an annual escalation factor, not to exceed two percent (2%) of the Maximum Special Tax for Facilities Districts with residential parcels (bonded) in effect for the prior fiscal year. For Services Districts (non-bonded) or non-residential Districts, the City may provide for an annual escalation factor, not to exceed four percent 4% of the Maximum Special Tax in effect for the prior fiscal year.

The maximum annual special tax submitted to the qualified electors of the CFD, when added together with all the annual payment requirements of overlapping debt and bonded assessments, and ad-valorem property taxes, shall not exceed one and three-fourths percent (1.75%) of the anticipated (as developed) Fair Market Value of the subject properties, based on projected home prices at time of bond sale, however, City staff may allow for a limit of more than one and three-fourths percent (1.75%) at the CFO's discretion.

The City shall retain a special tax consultant to prepare a report which:

A. Recommends a special tax formula for the proposed CFD.

B. Evaluates the special tax proposed to determine its ability to adequately fund identified public facilities, City administrative costs, services (if applicable) and other related expenditures. Such analysis shall also address the resulting aggregate tax burden of all proposed special taxes plus existing special taxes, ad valorem taxes, and assessments on the properties within the CFD. The rates and method of apportionment of

special taxes shall be designed to ensure sufficient revenues are produced in case of final development at lower densities than anticipated.

C. Consultants of the City for the District shall comply with the existing policies of the Fair Political Practices Commission and of the California Government Code.

For bonded districts the City may retain a Financial Advisor who will review the Tax Formula and other financial documents to determine that the documents have been prepared in a manner that does not adversely impact the City's financial position, district bonding capacity or credit rating. The Financial Advisor will confirm the findings of the Special Tax Consultant that the proposed Special Taxes are sufficient to fund all the future costs of the district. Costs incurred for these consultants will be paid by the applicant(s) by advance deposit increments and may be reimbursed from bond proceeds or Special Tax collections.

8. TERMS AND CONDITIONS OF BONDS

All terms and conditions of the bonds shall be established by the City, and included in the Fiscal Agent Agreement. The City or a designated fiscal agent will control, manage and invest all district issued bond proceeds designated for use on improvements. Each bond issue shall be structured to adequately protect bond owners and to not adversely impact the bonding capacity or credit rating of the City through the special taxes or assessments, credit enhancements, foreclosure covenant and reserve fund. Unless otherwise authorized by the City, the following shall serve as bond requirements:

A. If required, a reserve fund equal to an amount equal to the lesser of ten percent (10%) of the initial bond principal, or maximum annual debt service on the Bonds, or one hundred and twenty-five percent (125%) of average annual debt service, or as otherwise provided by Federal tax law. If agreed by the City and the Underwriter, a Surety may be purchased in lieu of a funded reserve.

B. The special taxes shall be levied for the first fiscal year following sale of the bonds for which they may be levied or at the end of capitalized interest period. Interest may be funded (capitalized) during a period not to exceed twenty-four (24) months, as determined by the CFO.

C. The repayment of principal shall begin on the earliest principal payment date for which sufficient special tax revenues can be made available after the end of the capitalized interest period, or otherwise as determined by the CFO to be appropriate.

D. The City may consider an increasing annual debt service by two percent (2%) per year for the term of the bonds. Determination of this shall be made by the CFO.

E. The maximum special tax shall be established to assure that the annual revenue produced by levy of the maximum special tax shall be equal to at least one hundred and ten percent (110%) of the maximum annual debt service.

F. Prior to the issuance of the bonds, the City may authorize its bond counsel to commence and process to final judgment an action establishing the validity of the proceedings, special tax and issuance of bonds, as determined appropriate by the City and such bond counsel.

G. In instances where multiple series of bonds are to be issued, the first series shall include public facilities of highest priority as determined by the City to be appropriate for initial development.

H. All statements and materials related to the sale or Community Facilities District bonds shall emphasize and state that neither the good faith, nor the taxing power of the City is pledged to security or repayment of the bonds. The sole source of revenues to secure bonds are special taxes.

9. DISTRICT COSTS, DEPOSITS AND REIMBURSEMENTS

All City and consultant costs incurred in the formation, evaluation and administration of district applications and the establishment of districts will be paid by the applicant by advance deposit increments. The City shall not incur any non-reimbursable expenses for processing and administering districts. Expenses not chargeable to the district shall be directly borne by the applicant.

Funds to reimburse costs and expenses incurred by the City shall be billed to the applicant and the applicant shall pay each invoice within sixty (60) calendar days of receipt of such notice. If the applicant fails to make any payment of funds for the proceedings, the City may suspend all proceedings until receipt of such additional deposit.

For districts financing facilities, except as otherwise provided herein, the applicant shall be entitled to reimbursement for reasonable costs and expenses incident to the construction of the public facilities as provided under the Mello-Roos Community Facilities Act of 1982, provided that all such costs and expenses are determined by the City to be necessary and reasonable.

The applicant or property owner shall not be entitled to reimbursement from bond proceeds for any of the expenses specified as follows:

A. In-house administrative and overhead expenses incurred by the applicant;

B. Interest expense incurred by the applicant on moneys advanced or expended during the proceedings and construction of public facilities; and

C. Any other costs and expenses incurred by the applicant which are not otherwise authorized for reimbursement under the Mello-Roos Act.

Neither the City nor the district shall be required to reimburse the applicant or property owner from any funds other than the proceeds of bonds issued by the district and pay-as-you-go special taxes.

10. AGREEMENTS

Agreements will be prepared incidental to district formation proceedings in a form satisfactory to the City and consistent with these policies. These agreements may include, but not be limited to:

A. Funding, Construction and Acquisition Agreement;

B. Joint Community Facilities Agreements with any other public agency entitled to receive any portion of the bond proceeds or entitled to own and operate any the public facilities financed by bond proceeds; and

C. Deposit and Reimbursement Agreement.

As a condition to the issuance and sale of bonds, all of the agreements specified shall be duly approved and executed by the parties thereto. Prior to execution of any agreements, such agreements shall be reviewed and approved by bond counsel and the City Attorney, who shall determine if each agreement shall also be approved by the City Council. Agreement approval by the City Attorney shall be indicated thereon when appropriate.

11. USE OF CONSULTANTS

The City shall have the sole discretion as to selection of consultants and determination of fees and expenses of all consultants necessary for the formation of the district and the issuance of bonds, including the underwriter(s), bond counsel, financial advisor, appraiser, trustee, paying agent, market absorption study consultant, and the special tax consultant after reasonable consultation with the applicant. Prior consent of the applicant shall not be required in the determination by the City of the consulting and financing team.

~~The City shall also be responsible for determining the structure of the bonds to be issued, including the method of sale (negotiated or competitive), the need for bond ratings, investment of bond proceeds, and all other terms and conditions incidental to structuring and closing a bond issuance and distribution of proceeds, including pay as you go funding and/or reimbursement to developer from excess (after debt service and district administration) special tax collections.~~

~~12. ACQUISITION PROVISIONS~~

~~The City, at its sole discretion, will determine the facilities to be acquired and the method of determining reasonable acquisition costs, which shall be set forth in the Funding, Construction and Acquisition Agreement. Applicable bidding, prevailing wage, and Department of Industrial Relations' registration requirements are extensive and will be addressed during the preparation of the Funding, Construction and Acquisition Agreement.~~

~~13. DISCLOSURE TO PURCHASERS~~

~~The applicant or property owner will be required to demonstrate to the satisfaction of the City that, to the best of their abilities, there will be full disclosure of the Mello-Roos special taxes to prospective purchasers of property including interim purchasers and sales to merchant builders. In addition to all requirements of law, the City shall require the applicant to provide disclosure of such information as the City deems appropriate to the purchasers of property within the district, with respect to the existence of the district, maximum and/or backup special taxes to be levied within the district, facilities to be constructed, the foreclosure process and the terms and conditions of bonds issued on behalf of the district. Such disclosure shall include home buyer notifications requiring signature prior to home purchases, as well as methods to notify subsequent home purchasers.~~

~~Upon request, the Finance Department will provide a "Notice of Special Tax" to sellers of real property subject to the levy of special taxes as required by Government Code Section 53340.2.~~

~~14. PROPERTY OWNER SUPPORT~~

~~In the instance of multiple property owners, the applicant shall be required to produce letters evidencing other property owners' support for the scope and establishment of the district as an attachment to the application. The applicant must have concurrence of 2/3 vote of the property owners to be included in a Community Facilities District.~~

~~15. LAND USE APPROVALS~~

~~Properties proposed for inclusion in a district must possess a land use determination such that proposed development land use and specific facility requirements can support the proposed special tax. The City will accept applications for Mello-Roos financing for residential properties primarily when they are included in an approved specific plan or City planning area.~~

~~16. APPLICATION PROCESS~~

~~Early communication with the City is encouraged to assist applicants in evaluating the feasibility of available financing programs and to discuss program procedures.~~

1. ~~PREAPPLICATION CONFERENCE: Applicant meets with City staff to discuss the proposed project and application procedures.~~

2. ~~PROJECT REVIEW: Applicant and City staff meet to discuss initial application, including any issues raised and further information that might be required. If necessary, applicant submits revised application.~~

3. ~~APPLICATION PROCESSING: Upon City determination that application is complete, staff prepares a staff report which forwards the request for district formation and possible bonding, and staff recommendation to the City Council.~~

4. ~~PROJECT INITIATION: Staff submits consultant contracts, reimbursement agreements and other similar items for City Council consideration.~~

5. ~~PROJECT IMPLEMENTATION: Applicant, staff and consultants meet to determine preliminary project schedule and begin work necessary to initiate district formation.~~

~~17. APPLICATION OF GOALS AND POLICIES~~

~~The City may find that a waiver of any of the above stated policies is reasonable given identified City benefits to be derived from such waiver. Such waivers may be granted with or without action of the City Council, as determined appropriate by the CFO. Approval by the City Council of formation of a district and/or issuance of bonds for a District constitutes a determination that a District conforms to the provisions of these Goals and Policies and, if applicable, that a waiver of any provision hereof is appropriate, and shall be conclusive evidence of such conformity.~~

~~These Goals and Policies may be reviewed and may be amended from time to time, as determined by the City to be appropriate in the light of changing conditions affecting the City and its real estate market and changes in practices among other communities in the region.~~

~~**ATTACHMENT 1**~~

~~**Governing Law:** California Government Code, beginning at Section 53312, Mello-Roos Community Facilities District Act, available online at http://www.leginfo.ca.gov/index.html.~~

~~**INFORMATIONAL SUMMARY OF Mello-Roos Community Facilities District Formation Process**~~

~~A Community Facilities District (CFD) is a legally constituted governmental entity created for the purpose of financing public facilities and services. It is similar in effect to an Assessment District except that the resulting security for debt in an Assessment District is a fixed lien assessment, while under a CFD it is a special tax. A CFD may finance a broad range of facilities and/or services, including facilities and/or services which benefit an area in a general way as opposed to benefiting specifically identified properties as required in an Assessment District.~~

~~The formation proceedings are subject to, and contingent upon satisfaction of all environmental, zoning and land use regulations. All documents of formation are to be prepared by the applicant or designated party.~~

~~1. **Initiation of Proceedings**. Proceedings can be initiated by the City on its own initiative, or must be must be considered within ninety (90) days from the time a request is made by a petition signed by ten percent (10%) of the registered voters (or ten percent (10%) of the landowners by area if less than twelve (12) registered voters) within the proposed CFD. The petition shall be accompanied by payment of a fee determined by the Finance Department to be sufficient to pay for costs incurred in conducting the proceedings.~~

~~2. **Resolution of Intention**. Adoption of a Resolution of Intention to establish a CFD begins the formation process, stating the name of the proposed CFD, the types of facilities and/or services to be financed and that, a special tax to pay for such facilities and/or services will be annually levied. The Resolution of Intention shall also fix a time and place for a public hearing between thirty (30) and sixty (60) days after the adoption of the Resolution of Intention, describe the method of levy and apportionment of the special tax and describe the proposed voting procedure. In addition, the resolution may specify conditions under which the obligation to pay the special tax may be prepaid and permanently satisfied. The City Council directs its responsible officers to study the proposed district and to file a report at or before the public hearing describing the proposed public facilities and services and an estimate of costs.~~

~~3. **Public Hearing.** Protests against the establishment of the CFD, the extent of the CFD or the furnishing of specified types of public facilities or services may be made orally or in writing by interested persons or taxpayers. If fifty percent (50%) or more of the registered~~

~~voters, or six (6) registered voters, whichever is more, residing within the proposed CFD or the owners of one-half (1/2) or more of the area of land in the proposed CFD file written protests against the establishment of the CFD, the proceedings are abandoned. If the protests are directed toward certain types of facilities or services, or against a specified special tax, those specific items may be eliminated from the resolution forming the CFD. The hearing may be continued for up to thirty (30) days without special findings and up to six (6) months if the City Council makes specified findings.~~

~~4. **Resolution of Formation**. If the City Council decides to establish the CFD, it will adopt a Resolution of Formation containing similar information as contained in the Resolution of Intention.~~

~~5. **Election**. If the City Council determines to form the CFD, it submits the question of whether special taxes should be levied to an election of the voters (or land owners if less than twelve (12) registered voters) of the proposed CFD. Combined with the tax proposition, there may be a proposition on the question of incurring bonded indebtedness. The tax, in order to be levied, must be approved by two-thirds (2/3) of the votes cast and thereafter levied by adoption of an ordinance of the City Council. The Mello-Roos Act provides that the election shall be at the next general election or at a special election to be held between ninety (90) and one hundred and eighty (180) days following the close of the protest hearing. The election time limits may be shortened by the unanimous consent of the qualified electors within the proposed district and the concurrence of the election official conducting the election.~~

~~6. **Special Tax Bonds**. A CFD may be created solely to provide the services permitted by statute. However, most CFD's have been created specifically for the purpose of levying special taxes to service bonded indebtedness incurred by the CFD in order to finance the construction of facilities. The proceedings to authorize and incur bonded indebtedness usually parallel the proceedings for formation of the CFD and the authorization to levy the special tax, although the bond proceedings could be conducted separately and at a later date. The proceeding to authorize bonded indebtedness involves a Resolution of Intention, public hearing and election, all conducted in a manner very similar to proceedings to form the CFD and levy the tax. Government Code Sections 53341 and 53359 establish a limited period of time in which special taxes levied under the Mello-Roos Act may be challenged by a third party. For this reason, the City may choose to wait (60) days (a 'validation period') after the authorization to incur bonded indebtedness is approved before CFD bonds are sold. CFD bonds may be sold competitively or through negotiated sale and may bear fixed or variable interest rates. In some cases, specified facilities may be provided by a CFD for only a portion of the land within the CFD. In that event, the Mello-Roos Act provides for the formation of improvement areas for which separate elections are conducted and to which a specified special tax applies.~~

CITY OF ROSEVILLE CALIFORNIA

Goals and Policies
Concerning Use of
MELLO-ROOS COMMUNITY FACILITIES ACT OF 1982

TABLE OF CONTENTS

Section		Page
	Introduction	1
1	Policy & Goals	1
2	Definitions	2
3	Eligible Public Facilities	3
4	Value-to-Lien Ratio	3
5	Market Absorption Study	4
6	Security	5
7	Special Tax Formula	5
8	Terms and Conditions of Bonds	7
9	District Costs, Deposits and Reimbursements	8
10	Agreements	8
11	Use of Consultants	9
12	Acquisition Provisions	9
13	Disclosure to Purchasers	9
14	Property Owner Support	10
15	Land Use Approvals	10
16	Application Process	10
17	Application of Goals and Policies	11
ATTACHMENT 1	Mello-Roos Community Facilities District Formation Process	12

INTRODUCTION

The purpose of the Goals and Policies is to establish for the City of Roseville (the "City") a format to establish the public benefit and guidelines for the financial aspects of Community Facilities Districts. The underlying principles behind the proposed policies are public interest and benefit, fairness to current and future property and homeowners, avoidance of future failure of the project and or property owner protest, protection of the City's financial position, and reimbursement to the City of its incurred expenses.

Community Facilities District laws are found in the Mello-Roos Community Facilities Act of 1982 in the California Government Code, beginning at Section 53312. These Goals and Procedures are adopted by the City in compliance with Section 53312.7 of the Government Code.

1. POLICY & GOALS

The City has developed the following Goals and Policies on financing facilities and/or services through the formation of Community Facilities Districts, including financing public facilities through the issuance of debt to be repaid from proceeds of Special Taxes levied within the districts. It is the City's goal to support projects which address a public need and provide a public benefit. Proposed projects requesting Community Facility District debt financing will be evaluated to determine if such financing is financially viable and in the best interest of the City and current and future City and project residents.

The City may consider facilities or services district formation on its own initiative and also will consider developer or property owner initiated applications requesting the formation of community facilities districts and the issuance of bonds to finance eligible public facilities necessary to serve newly developing commercial, industrial and residential projects in the following instances:

(1) When tax-exempt financing of project public facilities will result in a significant public benefit; and/or

(2) When the City has negotiated and executed a Development Agreement addressing project implementation; and/or

(3) When City based needs and circumstances warrant financing public services or facilities through a special tax to provide significant public benefit.

Generally, community serving public facilities will be eligible for this tax-exempt financing program. Facilities will be financed and districts formed in accordance with the then current provisions of the Mello-Roos Community Facilities Act of 1982, as amended, or any other methodology legally available to the City to finance such improvements.

Each time public facilities are to be built or accepted by the City a community facilities is formed for the benefit of a development project, and maintenance requirements will exceed normal City standards, the City will require the creation of a maintenance district, services district or Home/Property Owners Association suitable to provide such needs. The maintenance or services district may be established pursuant to the provisions of the Mello-Roos Community Facilities Act of 1982, or any other methodology legally available to the City to finance such maintenance. The purpose of the services/maintenance district is to fund all or a portion of the ongoing costs of parks and open space, public landscaping, police and fire protection services and library services and maintenance; and/or to pay for any unfunded ongoing City maintenance or service costs associated with the development project.

Existing neighborhoods may petition the City for the use of financing to fund local or neighborhood serving services and/or facilities in accordance with the Mello-Roos Community Facilities Act of 1982.

The City shall make the determination as to whether a proposed district shall proceed under the provisions of the Mello-Roos Community Facilities Act of 1982, or any other methodology legally available to the City to finance improvements, services or maintenance. The City may confer with consultants and the applicant to learn of any unique district requirements such as facilities or services serving the regional area or long-term development phasing prior to making any final determination.

All City and consultant costs incurred in the evaluation of new development district applications and the establishment of districts will be paid by the applicant(s)/petitioner(s) by advance deposit increments. The City shall not incur any non-reimbursable expense for processing community facilities districts. Expenses not chargeable to the district shall be borne by the applicant(s)/petitioner(s).

2. DEFINITIONS

Unless the context otherwise requires, the terms employed in the following policies shall have the meanings specified below:

"Bonds" means bonds authorized and issued under the Mello-Roos Community Facilities Act of 1982.

"City" means the City of Roseville.

"District" means a Community Facilities District formed under the Mello-Roos Community Facilities Act of 1982.

"**Pay-As-You-Go Basis**" means the use of annual and/or one-time Special Tax revenues to directly fund the acquisition, construction, improvement of Public Facilities.

"Public Facilities" means improvements authorized to be constructed or acquired under the Mello-Roos Community Facilities Act including, but not limited to, costs for specified capital facilities imposed by public agencies as a condition to approval of the development encompassed by the district or as a condition to service the district, which may include, but is not limited to infrastructure improvements such as major streets and arterials; highway improvements and freeways; freeway interchanges; right of way acquisitions; bridges, water sewer and drainage improvements; landscape irrigation and drainage facilities; environmental mitigation and remediation; bicycle and pedestrian facilities; parks; wetlands; electrical conduits; transit improvements; and other improvements as which are defined as authorized improvements under the Community Facilities District (s) selected by the City or any ordinance under the City.

"Value" or "Fair Market Value" means the amount of cash or its equivalent which property would bring if exposed for sale in the open market under conditions in which neither buyer nor seller could take advantage of a difficulty of the other, both having knowledge of all of the uses and purposes to which the property is adapted, and for which it is capable of being used and of the enforceable restrictions upon its uses and purposes.

3. ELIGIBLE PUBLIC FACILITIES AND SERVICES

Infrastructure and public facilities eligible for district financing are those improvements which benefit properties within a proposed development, and/or will mitigate impacts of that development upon areas of the City outside the proposed development, and which will be owned, operated and maintained by the City or another public agency approved by the City.

The City has final determination as to any facility's eligibility for financing as well as the prioritization of facilities to be included within a financing district. Generally, "in-tract" (i.e., local streets) improvements will not be considered eligible.

If a school is financed, the school district's goals and policies, if any, including its priority access policy will be coordinated with the formation of a district.

Public services eligible for district financing are those public services which benefit properties within a proposed development or area of the City subject to the special tax, subject to the limitation that a community facilities district tax approved by vote of the landowners of the district may only finance services to the extent that they are in addition to those provided in the territory of the district before the district was created.

4. VALUE-TO-LIEN RATIO

The City may sell bonds for the District only if it determines that the value of the real property that would be subject to the special tax to pay debt service will be at least three (3) times the

principal amount of the bonds to be sold and the principal amount of all other bonds outstanding that are secured by a special tax or bonded special assessment. Such determination will be based upon the full cash value as shown on the ad valorem assessment roll or upon an appraisal of the subject property made in a manner consistent with policies of the City. Requirements of a higher value to lien ratio may be imposed by the City and will be determined by City staff with recommendations from bond counsel, financial advisor, and the underwriter, with consideration of the facts pertaining to each particular project, including diversification of land ownership. Each project will be considered on its own merits. Additionally, the aggregate value to lien ratio of no more than five percent (5%) of the parcels expected to be subject to special taxes to pay debt service shall be below 3:1 or such higher ratio as determined by the City. The City may allow exceptions to its value to lien ratio requirements in accordance with the Mello Roos Act if it finds and determines that the proposed bonds do not present any unusual credit risk due to the availability of credit enhancements or for other reasons determined by the City.

The appraisal shall be coordinated by, under the direction of, and addressed to the City. All costs associated with the preparation of the appraisal report shall be paid by the applicant through the advance deposit mechanism. The appraisal shall be conducted in accordance with criteria, standards and assumptions established by the City, based upon the recommendations for each specific project received from the underwriter and financial advisor designated by the City. In every case, the appraisal shall reflect recognized appraisal standards for land-secured bond financing. The City prefers that the appraisal be prepared in accordance with the recommendations of the California Debt Advisory Commission as contained in the Appraisal Standards for Land-Based Secured Financings, and deviations therefrom will only be considered upon recommendation from bond counsel, financial advisor, the underwriter and/or the appraiser, with consideration of the facts pertaining to each particular project. In the case of a phased development, land value appraisal should include the developed land value assuming the infrastructure to be included in the current financing is completed. However, land values for remaining future phases of the development should not assume future infrastructure is completed.

5. MARKET ABSORPTION STUDY

The City may require a market absorption study, and may retain a consultant to prepare a report to verify market absorption assumptions and projected sales prices of the properties subject to the special taxes in the district. The study, if required, shall include an estimate of the total number of units, land uses and rate of absorption, and will be used as a basis for verification that sufficient revenues can be generated, and to determine if the financing of the infrastructure and public facilities is appropriate given the projected level and pace of development. All City and consultant costs incurred for this study will be paid by the applicant by advance deposit or out of special taxes or bond proceeds.

The study will also be provided to the appraiser for use in the appraisal process. The market absorption study should be completed prior to completion of the appraisal, and the appraisal shall

take into consideration and reasonably reconcile to the conclusions of the market absorption study or include reasons for significant alternate conclusions.

6. SECURITY

For new development, the applicant or property owner must demonstrate its financial plan and ability to pay all special taxes before full build-out has taken place to the satisfaction of the City. Additional security such as credit enhancement may be required by the City in its sole discretion in certain instances.

If the City requires letters of credit or other credit enhancement, the credit enhancement shall be issued by an institution in a form and upon terms and conditions satisfactory to the City. All fees payable on the letter of credit or other security shall be the sole responsibility of the district applicant or developer, not the City or district. Any security required to be provided by the applicant shall be discharged by the City upon the opinion of a qualified appraiser retained by the City that the value-to-lien ratio has reached an acceptable level as determined by the City or upon meeting other credit criteria established by the City.

As an alternative to providing security, depending on circumstances:

A. A portion of the bond proceeds may be placed in escrow with a corporate agent in an amount sufficient to assure an acceptable value-to-lien ratio is reached on the escrowed proceeds. The escrowed proceeds shall be released at such times and in such amounts as will assure an acceptable value-to-lien ratio with regard to the aggregate outstanding bonds and other covenants; or

B. The bonds may be issued in series with each series in an amount sufficient to assure an acceptable value-to-lien ratio with regard to the aggregate outstanding bonds and other covenants.

7. SPECIAL TAX FORMULA

The special tax formula for each District shall adhere to the following requirements:

A. The maximum special tax shall include the annual costs incurred by the City to administer the district, including debt service, City, County administrative expenses and delinquency coverage in an amount determined appropriate by City staff.

B. The special tax formula shall establish tax rates which correspond to the expected land use designation of each parcel.

C. The special tax formula shall be structured to ensure sufficient funds to pay for annual debt service and administrative expenses of the District.

D. A backup special tax or other mechanism to protect against changes in densities resulting in insufficient annual special tax revenues to pay annual debt service and administrative expenses shall be required.

E. The City may, at its sole discretion, provide for an annual escalation factor, not to exceed two percent (2%) of the Maximum Special Tax for Facilities Districts with residential parcels (bonded) in effect for the prior fiscal year. For Services Districts (non-bonded) or non-residential Districts, the City may provide for an annual escalation factor, not to exceed four percent 4% of the Maximum Special Tax in effect for the prior fiscal year.

The maximum annual special tax submitted to the qualified electors of the CFD, when added together with all the annual payment requirements of overlapping debt and bonded assessments, and ad-valorem property taxes, shall not exceed one and three-fourths percent (1.75%) of the anticipated (as developed) Fair Market Value of the subject properties, based on projected home prices at time of bond sale, however City staff may allow for a limit of more than one and three-fourths percent (1.75%) at the Finance Director's discretion.

The City shall retain a special tax consultant to prepare a report which:

A. Recommends a special tax formula for the proposed CFD.

B. Evaluates the special tax proposed to determine its ability to adequately fund identified public facilities, City administrative costs, services (if applicable) and other related expenditures. Such analysis shall also address the resulting aggregate tax burden of all proposed special taxes plus existing special taxes, ad valorem taxes, and assessments on the properties within the CFD. The rates and method of apportionment of special taxes shall be designed to ensure sufficient revenues are produced in case of final development at lower densities than anticipated.

C. Consultants of the City for the District shall comply with the existing policies of the Fair Political Practices Commission and of the California Government Code.

For bonded districts the City may retain a Financial Advisor who will review the Tax Formula and other financial documents to determine that the documents have been prepared in a manner that does not adversely impact the City's financial position, District bonding capacity or credit rating. The Financial Advisor will confirm the findings of the Special Tax Consultant that the proposed Special Taxes are sufficient to fund all the future costs of the District. Costs incurred for these consultants will be paid by the applicant(s) by advance deposit increments and may be reimbursed from bond proceeds or Special Tax collections.

8. TERMS AND CONDITIONS OF BONDS

All terms and conditions of the bonds shall be established by the City, and included in the Fiscal Agent Agreement. The City or a designated fiscal agent will control, manage and invest all district issued bond proceeds designated for use on improvements. Each bond issue shall be structured to adequately protect bond owners and to not adversely impact the bonding capacity or credit rating of the City through the special taxes or assessments, credit enhancements, foreclosure covenant and reserve fund. Unless otherwise authorized by the City, the following shall serve as bond requirements:

A. If required, a reserve fund equal to an amount equal to the lesser of ten percent (10%) of the initial bond principal, or maximum annual debt service on the Bonds, or 125% of average annual debt service, or as otherwise provided by Federal tax law. If agreed by the City and the Underwriter, a Surety may be purchased in lieu of a funded reserve.

B. The special taxes shall be levied for the first fiscal year following sale of the bonds for which they may be levied or at the end of capitalized interest period. Interest may be funded (capitalized) during a period not to exceed twenty-four (24) months, as determined by the Finance Director.

C. The repayment of principal shall begin on the earliest principal payment date for which sufficient special tax revenues can be made available after the end of the capitalized interest period, or otherwise as determined by the Finance Director to be appropriate.

D. The City may consider an increasing annual debt service by two percent (2%) per year for the term of the bonds. Determination of this shall be made by the Finance Director.

E. The maximum special tax shall be established to assure that the annual revenue produced by levy of the maximum special tax shall be equal to at least 110% of the maximum annual debt service.

F. Prior to the issuance of the bonds, the City may authorize its bond counsel to commence and process to final judgment an action establishing the validity of the proceedings, special tax and issuance of bonds, as determined appropriate by the City and such bond counsel.

G. In instances where multiple series of bonds are to be issued, the first series shall include public facilities of highest priority as determined by the City to be appropriate for initial development.

H. All statements and materials related to the sale or community facilities district bonds shall emphasize and state that neither the good faith, nor the taxing power

of the City is pledged to security or repayment of the bonds. The sole source of revenues to secure bonds are special taxes.

9. DISTRICT COSTS, DEPOSITS AND REIMBURSEMENTS

All City and consultant costs incurred in the formation, evaluation and administration of district applications and the establishment of districts will be paid by the applicant by advance deposit increments. The City shall not incur any non-reimbursable expenses for processing and administering Districts. Expenses not chargeable to the District shall be directly borne by the applicant.

Funds to reimburse costs and expenses incurred by the City shall be billed to the applicant and the applicant shall pay each invoice within sixty (60) calendar days of receipt of such notice. If the applicant fails to make any payment of funds for the proceedings, the City may suspend all proceedings until receipt of such additional deposit.

For Districts financing facilities, except as otherwise provided herein, the applicant shall be entitled to reimbursement for reasonable costs and expenses incident to the construction of the public facilities as provided under the Mello-Roos Community Facilities Act of 1982, provided that all such costs and expenses are determined by the City to be necessary and reasonable.

The applicant or property owner shall not be entitled to reimbursement from bond proceeds for any of the expenses specified as follows:

A. In-house administrative and overhead expenses incurred by the applicant;

B. Interest expense incurred by the applicant on moneys advanced or expended during the proceedings and construction of public facilities; and

C. Any other costs and expenses incurred by the applicant which are not otherwise authorized for reimbursement under the Mello-Roos Act.

Neither the City nor the District shall be required to reimburse the applicant or property owner from any funds other than the proceeds of bonds issued by the District and pay-as-you-go special taxes.

10. AGREEMENTS

Agreements will be prepared incidental to District formation proceedings in a form satisfactory to the City and consistent with these policies. These agreements may include, but not be limited to:

A. Funding, Construction and Acquisition and Shortfall Agreement;

B. Joint Community Facilities Agreements with any other public agency entitled to receive any portion of the bond proceeds or entitled to own and operate any the public facilities financed by bond proceeds; and

C. Deposit and Reimbursement agreement.

As a condition to the issuance and sale of bonds, all of the agreements specified shall be duly approved and executed by the parties thereto. Prior to execution of any agreements, such agreements shall be reviewed and approved by bond counsel and the City Attorney, who shall determine if each agreement shall also be approved by the City Council. Agreement approval by the City Attorney shall be indicated thereon when appropriate.

11. USE OF CONSULTANTS

The City shall have the sole discretion as to selection of consultants and determination of fees and expenses of all consultants necessary for the formation of the District and the issuance of bonds, including the underwriter(s), bond counsel, financial advisor, appraiser, trustee, paying agent, market absorption study consultant, and the special tax consultant after reasonable consultation with the applicant. Prior consent of the applicant shall not be required in the determination by the City of the consulting and financing team.

The City shall also be responsible for determining the structure of the bonds to be issued, including the method of sale (negotiated or competitive), the need for bond ratings, investment of bond proceeds, and all other terms and conditions incidental to structuring and closing a bond issuance and distribution of proceeds, including pay-as-you-go funding and/or reimbursement to developer from excess (after debt service and District administration) special tax collections.

12. ACQUISITION PROVISIONS

The City, at its sole discretion, will determine the facilities to be acquired and the method of determining reasonable acquisition costs, which shall be set forth in the Funding, Construction and Acquisition Agreement. Applicable bidding and prevailing wage requirements are extensive and will be addressed during the preparation of the Funding, Construction and Acquisition Agreement.

13. DISCLOSURE TO PURCHASERS

The applicant or property owner will be required to demonstrate to the satisfaction of the City that, to the best of their abilities, there will be full disclosure of the Mello-Roos special taxes to prospective purchasers of property including interim purchasers and sales to merchant builders.

In addition to all requirements of law, the City shall require the applicant to provide disclosure of such information as the City deems appropriate to the purchasers of property within the District, with respect to the existence of the District, maximum and/or backup special taxes to be levied within the District, facilities to be constructed, the foreclosure process and the terms and conditions of bonds issued on behalf of the District. Such disclosure shall include home buyer notifications requiring signature prior to home purchases, as well as methods to notify subsequent home purchasers.

Upon request, the Finance Department will provide a "Notice of Special Tax" to sellers of real property subject to the levy of special taxes as required by Government Code section 53340.2.

14. PROPERTY OWNER SUPPORT

In the instance of multiple property owners, the applicant shall be required to produce letters evidencing other property owners' support for the scope and establishment of the District as an attachment to the application. The applicant must have concurrence of 2/3 vote of the property owners to be included in a Community Facilities District, unless the City accepts moving forward based on special circumstances.

15. LAND USE APPROVALS

Properties proposed for inclusion in a District must possess a land use determination such that proposed development land use and specific facility requirements can support the proposed special tax. The City will accept applications for Mello-Roos financing for residential properties primarily when they are included in an approved specific plan or City planning area.

16. APPLICATION PROCESS

Early communication with the City is encouraged to assist applicants in evaluating the feasibility of available financing programs and to discuss program procedures.

1. PREAPPLICATION CONFERENCE: Applicant meets with City to discuss the proposed project and application procedures.

2. PROJECT REVIEW: Applicant and City staff meet to discuss initial application, including any issues raised and further information that might be required. If necessary, applicant submits revised application.

3. APPLICATION PROCESSING: Upon City determination that application is complete, staff prepares a staff report which forwards the request for district formation and possible bonding, and staff recommendation to the City Council.

4. PROJECT INITIATION: Staff submits consultant contracts, reimbursement agreements and other similar items for City Council consideration.

5. PROJECT IMPLEMENTATION: Applicant, staff and consultants meet to determine preliminary project schedule and begin work necessary to initiate district formation.

17. APPLICATION OF GOALS AND POLICIES

The City may find that a waiver of any of the above stated policies is reasonable given identified City benefits to be derived from such waiver. Such waivers may be granted with or without action of the City Council, as determined appropriate by City staff. Approval by the City Council of formation of a District and/or issuance of bonds for a District constitutes a determination that a District conforms to the provisions of these Goals and Policies and, if applicable, that a waiver of any provision hereof is appropriate, and shall be conclusive evidence of such conformity.

These Goals and Policies may be reviewed and may be amended from time to time, as determined by the City to be appropriate in the light of changing conditions affecting the City and its real estate market and changes in practices among other communities in the region.

ATTACHMENT 1

GOVERNING LAW: California Government Code, beginning at Section 53312, Mello-Roos Community Facilities District Act, available online.

INFORMATIONAL SUMMARY OF MELLO-ROOS COMMUNITY FACILITIES DISTRICT FORMATION PROCESS

A Community Facilities District (CFD) is a legally constituted governmental entity created for the purpose of financing public facilities and services. It is similar in effect to an assessment district except that the resulting security for debt in an assessment district is a fixed lien assessment, while under a CFD it is a special tax. A CFD may finance a broad range of facilities and/or services, including facilities and/or services which benefit an area in a general way as opposed to benefiting specifically identified properties as required in an assessment district.

The formation proceedings are subject to, and contingent upon satisfaction of all environmental, zoning and land use regulations. All documents of formation are to be prepared by the applicant or designated party.

1. **Initiation of Proceedings**. Proceedings can be initiated by the City on its own initiative, or must be must be considered within ninety (90) days from the time a request is made by a petition signed by ten percent (10%) of the registered voters (or ten percent (10%) of the landowners by area if less than twelve (12) registered voters) within the proposed CFD. The petition shall be accompanied by payment of a fee determined by the Finance Department to be sufficient to pay for costs incurred in conducting the proceedings.

2. **Resolution of Intention**. Adoption of a Resolution of Intention to establish a CFD begins the formation process, stating the name of the proposed CFD, the types of facilities and/or services to be financed and that, a special tax to pay for such facilities and/or services will be annually levied. The Resolution of Intention shall also fix a time and place for a public hearing between thirty (30) and sixty (60) days after the adoption of the Resolution of Intention, describe the method of levy and apportionment of the special tax and describe the proposed voting procedure. In addition, the resolution may specify conditions under which the obligation to pay the special tax may be prepaid and permanently satisfied. The City Council directs its responsible officers to study the proposed district and to file a report at or before the public hearing describing the proposed public facilities and services and an estimate of costs.

3. **Public Hearing**. Protests against the establishment of the CFD, the extent of the CFD or the furnishing of specified types of public facilities or services may be made orally or in writing by interested persons or taxpayers. If fifty percent (50%) or more of the registered voters, or six (6) registered voters, whichever is more, residing within the proposed CFD or the owners of one-half (1/2) or more of the area of land in the proposed CFD file

written protests against the establishment of the CFD, the proceedings are abandoned. If the protests are directed toward certain types of facilities or services, or against a specified special tax, those specific items may be eliminated from the resolution forming the CFD. The hearing may be continued for up to thirty (30) days without special findings and up to six (6) months if the City Council makes specified findings.

4. **Resolution of Formation**. If the City Council decides to establish the CFD, it will adopt a Resolution of Formation containing similar information as contained in the Resolution of Intention.

5. **Election**. If the City Council determines to form the CFD, it submits the question of whether special taxes should be levied to an election of the voters (or land owners if less than twelve (12) registered voters) of the proposed CFD. Combined with the tax proposition, there may be a proposition on the question of incurring bonded indebtedness. The tax, in order to be levied, must be approved by two-thirds (2/3) of the votes cast and thereafter levied by adoption of an ordinance of the City Council. The Mello-Roos Act provides that the election shall be at the next general election or at a special election to be held between ninety (90) and one hundred and eighty (180) days following the close of the protest hearing. The election time limits may be shortened by the unanimous consent of the qualified electors within the proposed district and the concurrence of the election official conducting the election.

6. **Special Tax Bonds**. A CFD may be created solely to provide the services permitted by statute. However, most CFD's have been created specifically for the purpose of levying special taxes to service bonded indebtedness incurred by the CFD in order to finance the construction of facilities. The proceedings to authorize and incur bonded indebtedness usually parallel the proceedings for formation of the CFD and the authorization to levy the special tax, although the bond proceedings could be conducted separately and at a later date. The proceeding to authorize bonded indebtedness involves a Resolution of Intention, public hearing and election, all conducted in a manner very similar to proceedings to form the CFD and levy the tax. Government Code Sections 53341 and 53359 establish a limited period of time in which special taxes levied under the Mello-Roos Act may be challenged by a third party. For this reason, the City may choose to wait (60) days (a ‘validation period’) after the authorization to incur bonded indebtedness is approved before CFD bonds are sold. CFD bonds may be sold competitively or through negotiated sale and may bear fixed or variable interest rates. In some cases, specified facilities may be provided by a CFD for only a portion of the land within the CFD. In that event, the Act provides for the formation of improvement areas for which separate elections are conducted and to which a specified special tax applies.

COUNCIL COMMUNICATION

CC #: 8301
File #: 0214 & 0721-03

Title:	Mobility Management Grant Amendment and Authorization
Contact:	Elizabeth Haydu 916-746-1302 ehaydu@roseville.ca.us

Meeting Date: 3/1/2017
Item #: 6.6.

RECOMMENDATION TO COUNCIL

Staff recommends that the City Council adopt the attached resolution authorizing the City Manager or His Designee to:

1. Amend Caltrans' Standard Agreement #64AM16-00103 for FTA Federal Fiscal Years (FFY) 2013-2104 Section 5310 grant funds to continue through November 15, 2018.
2. Submit a grant application for FTA Section 5310 operating funds for Enhanced Mobility of Seniors and Individuals with Disabilities to continue the Roseville Transit Mobility Management Program for two years up to a maximum apportionment of $160,000.00, with a local match of $40,000.00, for a total cost of $200,000.00.
3. Execute all related forms and agreements.

BACKGROUND

The California Department of Transportation (Caltrans) manages the Enhanced Mobility of Seniors and Individuals with Disabilities Program, which is also known as the Mobility Management Program. This program offers Federal Transit Administration (FTA) Section 5310 grant funds for local programs that provide mobility management services to seniors and persons with disabilities. The goal of the program is to provide mobility training that will equip individuals with the experience and information they need to travel independently using transit services. This grant grant program requires a 20% match which may be provided using state funds (if available) or local transportation funds.

Amendment to Existing Grant - On March 2, 2016, Caltrans awarded a Mobility Management FTA 5310 Grant in the amount of $269,000.00 to the City of Roseville to provide mobility management services in the South Placer County region for a time frame of 2 years. The required 20% match of $67,250.00 is being provided through the State toll credit program. The total cost of the program is $336,250.00, and no local funds are being used. This existing grant includes funding for:

- Mobility training through a professional services contract with Paratransit, Inc. to train seniors and individuals with disabilities to successfully ride transit;
- Production of a new transit training video, and an update to the two (2) videos previously

produced;
- Additional training materials and materials to expand the Transit Ambassador program;
- Additional staff at the South Placer Transit Information call center to handle mobility training referrals and an increasing amount of phone calls;
- Mobile Data Terminals for paratransit vehicles to assist with timely arrivals;
- Replacement of outdated TDD equipment used by hearing impaired passengers.

Funding for the program is administered by Caltrans through Standard Agreement number 64AM16-00103. The agreement includes funding for the full two years of the Mobility Management program. However, to ensure that the City of Roseville was successful in meeting deadlines and project objectives, Caltrans required that the agreement include only a one-year term that expires on March 1, 2017. The proposed amendment will now extend the term of the Agreement for another 18 months through November 15, 2018. The 18-month term is required because, due to Caltrans and federal oversight requirements, we were not able to initiate program activities until September 2016. The 18-month extension will therefore allow the City of Roseville to complete the initial 2-year roll out of the South Placer Mobility Management Program. During the first 5 months of the program, 5 persons have gone through the training and have experienced positive mobility outcomes. As the weather improves this spring, we anticipate demand for this program to increase.

Proposed New Grant - Caltrans recently issued a call for projects for the next cycle of Mobility Management grants. To continue the Mobility Management Program beyond the November 15, 2018 expiration of the first grant cycle, staff recommends that the City apply for up to $160,000 in additional Mobility Management FTA Grant funds in this new funding cycle. The 20% match would be $40,000.00 for a total program cost of $200,000.00. We anticipate that State toll credits will be available as the grant match. However, if it turns out that toll credits are unavailable, then the match will be provided by the Local Transportation Fund. No General Fund monies will be used.

FISCAL IMPACT

The Mobility Management program is funded primarily through FTA Section 5310 grants, with the required match funded by State toll credits. If State toll credits are unavailable for the proposed new grant's $40,000 match, then the match will be provided by the Local Transportation Fund. The requested actions will provide an overall positive fiscal impact to the City, and will not require the use of the City’s General Fund.

ECONOMIC DEVELOPMENT / JOBS CREATED

Based on Federal guidelines there is one job created for every $92,000.00 in direct government spending. Using this guideline these funds could generate up to five (5) jobs.

ENVIRONMENTAL REVIEW

The California Environmental Quality Act (CEQA) does not apply to activities that will not result in a direct or reasonably foreseeable indirect physical change in the environment (CEQA Guidelines §15061(b)(3). The FTA Section 5310 Mobility Management Program does not include the potential for a significant environmental effect, and therefore is not subject to CEQA.

Respectfully Submitted,

Elizabeth Haydu, Financial Analyst

Rhon Herndon, Public Works Director

_____

Rob Jensen, City Manager

ATTACHMENTS:

Description

Resolution No. 17-83

Standard Agreement Amendment

Standard Agreement Amendment Exhbits

RESOLUTION NO. 17-83

APPROVING CALIFORNIA DEPARTMENT OF TRANSPORTATION (CALTRANS) STANDARD AGREEMENT AMENDMENT NO. 1 AND AUTHORIZING CITY MANAGER TO SUBMIT A FEDERAL TRANSPORTATION ADMINISTRATION (FTA) SECTION 5310 GRANT APPLICATION AND EXECUTE ALL RELATED FORMS AND AGREEMENTS

WHEREAS, Caltrans manages the Enhanced Mobility of Seniors and Individuals with Disabilities Program, also known as the Mobility Management Program; and

WHEREAS, this program offers FTA Section 5310 grant funds for local programs that provide mobility management services to seniors and persons with disabilities; and

WHEREAS, the City's funding for the program is administrated by Caltrans through Standard Agreement #64AM16-00103, which is expiring March 1, 2017; and

WHEREAS, Amendment No. 01 to that agreement will extend the term of the agreement through November 15, 2018 and allow the City to complete the initial 2-year roll out of the program; and

WHEREAS, Caltrans issued a call for projects for the next cycle of Mobility Management grants and staff recommends that the City apply for up to $160,000 in additional FTA Section 5310 grant funds in the new funding cycle; and

BE IT FURTHER RESOLVED that the City Manager or his designee is hereby authorized to execute Amendment No. 1 of Standard Agreement #64AM16-00103.

NOW, THEREFORE, BE IT RESOLVED by the City Council of the City of Roseville that the City Manager or his designee is hereby authorized to submit a Federal Transportation Administration (FTA) Section 5310 grant application for the funding of the Mobility Management Plan and to execute any related forms and agreements;

PASSED AND ADOPTED by the Council of the City of Roseville this ___ day of _____, 20__, by the following vote on roll call:

AYES COUNCILMEMBERS:

NOES COUNCILMEMBERS:

ABSENT COUNCILMEMBERS:

_____
MAYOR

ATTEST:

_____
City Clerk

Please wait...

If this message is not eventually replaced by the proper contents of the document, your PDF viewer may not be able to display this type of document.

You can upgrade to the latest version of Adobe Reader for Windows®, Mac, or Linux® by visiting http://www.adobe.com/go/reader_download.

For more assistance with Adobe Reader visit http://www.adobe.com/go/acrreader.

Windows is either a registered trademark or a trademark of Microsoft Corporation in the United States and/or other countries. Mac is a trademark of Apple Inc., registered in the United States and other countries. Linux is the registered trademark of Linus Torvalds in the U.S. and other countries.

EXHIBIT A

SECTION 5310 – Operating Assistance/Mobility Management

SCOPE OF WORK

1. In order to carry out the purpose of 49 U.S.C. 5310, the California Department of Transportation (hereafter called the STATE) is the sole State agency authorized to evaluate and submit to the Federal Transit Administration (hereafter called FTA) grant requests from private nonprofit corporations, private for profit corporations and public agencies for assistance in providing transportation services meeting the special needs of seniors and/or persons with disabilities, for whom mass transportation services are otherwise unavailable, insufficient, or inappropriate.

2. The CONTRACTOR has been designated by the STATE as a private nonprofit corporation, private for profit corporation or public agency proposing transportation services (hereafter called the PROJECT) eligible for assistance under FTA Section 5310 Enhanced Mobility of Seniors and Individuals with Disabilities.

3. The CONTRACTOR agrees to complete the defined PROJECT described in the grant application, which adopts all of the terms and conditions of this Agreement. For the purpose of carrying out the PROJECT, the following scope of work, pursuant to this Agreement, is to be implemented by CONTRACTOR:

   Mobility Management funds for the Regional Mobility Management Program for South Placer County which will serve people in the Sacramento Urbanized Area, primarily in the South Placer region. As part of the Regional Mobility Management Program, services provided by the South Placer Transit Information Call Center (Call Center) and the volunteer Transit Ambassador Program are available for anybody to use inside and outside of the Sacramento Urbanized Area. The Call Center and the Transit Ambassador services can be accessed through a single phone number in both the (916) and (530) area codes, the website and via email. Transit Ambassadors volunteer to assist passengers on-board all local fixed route transit buses and at all major transfer points in South Placer County.

   The Call Center assists passengers with transit information and trip reservations for all public transit operators and Health Express; Health Express is the medical trip provider operated by WPCTSA to provide needed medical trips to seniors and disabled persons beyond the services of the public transit operators in South Placer. The Health Express service area includes the service areas of all public transit operators in the cities of Roseville, Rocklin, Loomis, Auburn, Lincoln, and Colfax, and most of the unincorporated areas of Placer County. The Call Center also assists passengers who transfer from the Sacramento Regional Transit Fixed Route and its ADA complimentary paratransit services (Paratransit Inc.) with information and reservations.

   The Transit Ambassador program recruits and provides training for volunteers who assist passengers on buses and at transit stops. Transit Ambassadors also help staff at community events throughout the WPCSTA jurisdictional boundaries to promote use of the various transit services within the area.

4. The CONTRACTOR agrees, within the scope of this PROJECT, to provide public transportation service to the general public in accordance with the terms and conditions of this Agreement and the CONTRACTOR's application for Federal assistance, which is on file with the STATE's FTA Section 5310 Program.

5. The CONTRACTOR agrees to operate the PROJECT within the service area as described in this Agreement under Paragraph 3.

EXHIBIT A

6. **The Large Urbanized Area (UZA) for this project is/are: Placer County Transportation Planning Agency**

7. The parties agree that only those paragraphs that have a mark ("X") opposite to the PROJECT category shall apply to Exhibit A of this Agreement.

A. ☐ **Operating Project**

1. The CONTRACTOR's application for an operating assistance grant under 49 USC Section 5310 of the Federal Transit Act, as amended, has been certified to the FTA by the STATE as having met all the statutory and administrative requirements for PROJECT approval. The purpose of this Agreement is to implement the approved PROJECT.

2. Operating assistance eligible for reimbursement under this Agreement are costs directly related to system operations and may include: fuel, oil, drivers' salaries and fringe benefits, dispatchers' salaries and fringe benefits, and licenses. Up to Fifty (50) percent of the net PROJECT costs are eligible for reimbursement under this Agreement, not to exceed the amount encumbered in this Standard Agreement. No payment shall be made in advance of performance of work.

EXHIBIT A

B. [redacted] **Mobility Management**

1. The CONTRACTOR's application for a mobility management grant under 49 USC Section 5310 of the Federal Transit Act, as amended, has been certified to the FTA by the STATE as having met all the statutory and administrative requirements for PROJECT approval. The purpose of this Agreement is to implement the approved mobility management PROJECT.

2. **Detailed Implementation Plan** is made a part hereof for Mobility Management projects. The PROJECT tasks described in the **Detailed Implementation Plan** shall be implemented by the CONTRACTOR pursuant to this Agreement at costs not to exceed the estimated cost specified therein.

7. The PROJECT representatives during the term of this Agreement will be:

State Agency: Department of Transportation	CONTRACTOR: The City of Roseville
Name: Bruce W. Plowman	Name: Michael Dour
Title: Chief, Specialized Transit Grants Branch	Title: Alternative Transportation Manager
Phone: (916) 657-3875	Phone: 916-774-5293
Email: bruce.plowman@dot.ca.gov	Email: mdour@roseville.ca.us

Direct all inquiries to:

State Agency: Department of Transportation	CONTRACTOR: The City of Roseville
Section/Unit: Div. of Rail and Mass Transp.	Section/Unit: Alternative Transportation Division-Public Works
Attn: Jackie Fleck	Attn: Elizabeth Haydu
Title: Associate Transportation Planner	Title: Financial Analyst
Address: PO Box 942874, MS 39	Address: 316 Vernon Street, Suite 150
Sacramento, CA 95814	Roseville CA 95678
Phone: 916-654-9979	Phone: 916-774-5293
Email: jackie.fleck@dot.ca.gov	Email: ehaydu@roseville.ca.us

EXHIBIT B

SECTION 5310 – Operating Assistance/Mobility Management

BUDGET DETAIL AND PAYMENT PROVISIONS

1. **INVOICING & PAYMENT**

   A. The CONTRACTOR's accounting system and billing procedures are subject to audit by STATE prior to contract award, and accounting records pertaining to work performed and costs billed to STATE are subject to audit for a period of three (3) years after date of final payment under this Agreement. If the CONTRACTOR fails to retain records such as employee time cards, payroll records, travel records, equipment time and cost records, billings from subcontractors, material and equipment supplier records that are sufficient to permit audit verification of the validity of costs charged to STATE, the CONTRACTOR will be liable for reimbursement to STATE of all unsubstantiated billings.

   B. Funds allocated for use on this PROJECT are payable to the CONTRACTOR after execution of this contract and the submission to the STATE (in triplicate), of a signed CONTRACTOR's request for payment for the following: (1) invoice amount, (2) project summary of expenses, and (3) FTA Section 5310 DBE Bi-Annual Awards/Commitment and Actual Payment Form.

   C. Upon review and approval by the STATE, STATE agrees to reimburse the CONTRACTOR for allowable costs based on 2 CFR, Part 225, [previously Office of Management and Budgets (OMB) Circular A-87)], and 49 CFR, Part 18, upon receipt of an invoice that is itemized per Exhibit E, Cost Worksheet, and otherwise meets the requirements of this Standard Agreement. Incomplete or disputed invoices shall be returned to CONTRACTOR, unpaid, for correction and must be resubmitted to STATE prior to the payment of the invoice.

   D. Invoices shall be itemized in accordance with Exhibit E, Cost Worksheet, or Project Budget Worksheet in the application, as applicable, and shall include original signed invoices, and proof of payment for materials, supplies, and equipment, and for travel describing the purpose of travel as it pertains to Cost Worksheet, classifications, hourly rates, and identification of work to be reimbursed for the payment period, indirect costs, and subcontractor costs itemized similar to those of the CONTRACTOR, as set forth in the Cost Worksheet.

   E. The net PROJECT cost and the ability to allow individual items of PROJECT cost shall be determined in conformance with CFR 48, Federal Acquisition Regulations (FAR), Chapter 1, Part 31, 2 CFR Part 225 FAR Subpart 31.2, "Contracts with Commercial Organizations," and other applicable regulations, circulars, or memorandums that may be issued by FTA.

   F. Upon successful completion of the PROJECT or upon termination by STATE, the parties shall determine the amount of compensation, if any, to be repaid by the CONTRACTOR to STATE in order to avoid any STATE liability to FTA due to payments erroneously made to the CONTRACTOR in excess of the total PROJECT amount eligible for Federal reimbursement.

2. The parties agree that only those paragraphs that have a mark ("X") opposite to the PROJECT category shall apply to this Agreement.

   A. ☐ **Operating Project**

      1. For services satisfactorily rendered, and upon receipt and approval of the invoices, the basis of payment for the services provided under this Agreement shall be reimbursement in arrears for actual allowable costs. The STATE will reimburse the CONTRACTOR for actual allowable costs, per 2 CFR Part 225 including, but not limited to, employee benefits and overhead, incurred

EXHIBIT B

after the effective date of this Agreement. Not more than once a month, the CONTRACTOR may submit to STATE signed invoices in triplicate with enough detail to assure that costs are eligible and allowable under this Agreement. Upon receipt of these signed invoices, STATE shall reimburse the CONTRACTOR up to Fifty (50) percent of the total operating cost, not to exceed the amount encumbered in this Standard Agreement. No payment shall be made in advance of performance of work.

2. The net PROJECT cost and the allowable individual items of PROJECT cost shall be determined in conformance with CFR 48, Federal Acquisition Regulations (FAR), Chapter 1, Part 31, 2 CFR Part 225 and FAR Subpart 31.2, "Contracts with Commercial Organizations," and other applicable regulations, circulars, or memoranda that may be issued by FTA.

3. Direct and Indirect Costs. The public agency or Indian Tribal Government agency CONTRACTOR shall comply with 2 CFR Part 225 (formerly Office of Management and Budget (OMB) Circular A–87). The nonprofit agency CONTRACTOR shall comply with 48 CFR, Federal Acquisition Regulations System, Chapter 1, Part 31, 2 CFR Part 230 (OMB Circular A-122), and other applicable regulations, circulars, or memorandums that may be issued by the FTA. The CONTRACTOR certifies that all direct and indirect costs billed are allowable. All direct costs, even for project administration activities, must be adequately supported with proper documentation. Indirect costs must be supported by an approved Cost Allocation Plan (CAP). Indirect charges incurred prior to plan approval is not an allowable expense. The CONTRACTORs that are private for-profit organizations must comply with 48 CFR Subpart 31.2, "Contracts with Commercial Organizations."

4. No advance payment will be made for the PROJECT. Reimbursements will only be allowed after execution of this Agreement for submission of the appropriate purchase orders, receipt of all invoices and the full delivery of all equipment described in Exhibit A of this Agreement. Reimbursement will only be allowed for purchases made after the effective date of this Agreement. Project invoices shall be submitted in triplicate not more frequently than monthly in arrears and must include the Agreement Number. Incomplete or erroneous invoices shall be returned to the CONTRACTOR, unpaid, for correction. Final invoices are due to the STATE to the Division of Rail and Mass Transportation, Section 5310 Branch, 60 (sixty) days after of Standard Agreement expiration.

5. Upon successful completion of the PROJECT or upon termination by STATE, the parties shall determine the amount of compensation, if any, to be repaid by the CONTRACTOR to STATE in order to avoid any STATE liability to FTA due to payments erroneously made to the CONTRACTOR in excess of the total PROJECT amount eligible for Federal reimbursement.

D. [redacted] Mobility Management Project

1. For services satisfactorily rendered, and upon receipt and approval of the invoices, the basis of payment for the services provided under this Agreement shall be reimbursement in arrears for actual allowable costs. The request(s) for reimbursement shall certify that the CONTRACTOR has paid wages and salaries, and shall list the various salary and other accounts to which the grant funds will be applied. Upon receipt of these invoices, the STATE shall reimburse the CONTRACTOR up to Eighty (80) percent of the total PROJECT cost but not to exceed the amount encumbered in this Standard Agreement.

2. The STATE's obligations to the CONTRACTOR under the terms of this Agreement shall terminate upon payments of CONTRACTOR's invoice(s) for the FTA allowable portions of said equipment costs. The request(s) for reimbursement shall certify that the CONTRACTOR has

EXHIBIT B

received and accepted the equipment and shall be submitted together with copies of the equipment vendor's invoices and the CONTRACTOR's purchase orders. The CONTRACTOR's invoices and the vendor's invoices shall be consistent internally and with the purchase order and shall include a breakdown of equipment unit costs, sales tax, registration fees, and any other items procured with said purchase orders, including items and costs not reimbursable under this PROJECT and any items not subject to sales tax. The latter includes "items and materials when used to modify a vehicle for physically handicapped persons", which are exempt from sales tax under Revenue and Taxation Code Section 6369.4.

3. The net PROJECT cost and the allowable individual items of PROJECT cost shall be determined in conformance with CFR 48, Federal Acquisition Regulations (FAR), Chapter 1, Part 31, 2 CFR Part 225 and FAR Subpart 31.2, "Contracts with Commercial Organizations," and other applicable regulations, circulars, or memorandums that may be issued by FTA.

4. Direct and Indirect Costs. The public agency or Indian Tribal Government agency CONTRACTOR shall comply with 2 CFR Part 225 (formerly Office of Management and Budget (OMB) Circular A–87). The nonprofit agency CONTRACTOR shall comply with 48 CFR, Federal Acquisition Regulations System, Chapter 1, Part 31, 2 CFR Part 230 (OMB Circular A-122), and other applicable regulations, circulars, or memorandums that may be issued by the FTA. CONTRACTOR certifies that all direct and indirect costs billed are allowable. All direct costs, even for project administration activities, must be adequately supported with proper documentation. Indirect costs must be supported by an approved Cost Allocation Plan (CAP). Indirect charges incurred prior to plan approval by the STATE is not an allowable expense. The CONTRACTORs that are private for-profit organizations must comply with 48 CFR Subpart 31.2, "Contracts with Commercial Organizations."

5. No advance payment will be made for the PROJECT. Reimbursements will only be allowed after execution of this Agreement for submission of the appropriate purchase orders, receipt of all invoices and the full delivery of all equipment described in Exhibit A of this Agreement. Reimbursement will only be allowed for purchases made after the effective date of this Agreement. Project invoices shall be submitted in triplicate not more frequently than monthly in arrears and must include the Agreement Number. Final invoices are due to the STATE to the Division of Rail and Mass Transportation, Section 5310 Branch 60 (sixty) days after Standard Agreement expiration.

6. Invoices shall be itemized in accordance with the Detailed Implementation Plan and shall incorporate PROJECT progress, including dates of service, tasks partially or fully completed, and hours worked.

7. Upon successful completion of the PROJECT or upon termination by STATE, the parties shall determine the amount of compensation, if any, to be repaid by the CONTRACTOR to STATE in order to avoid any STATE liability to FTA due to payments erroneously made to the CONTRACTOR in excess of the total PROJECT amount eligible for Federal reimbursement.

2. **BUDGET CONTINGENCY CLAUSE**

A. It is mutually agreed that if the Budget Act of the current year and/or any subsequent years covered under this Agreement does not appropriate sufficient funds for the program, this Agreement shall be of no further force and effect. In this event, the STATE shall have no liability to pay any funds whatsoever to CONTRACTOR or to furnish any other considerations under this Agreement and CONTRACTOR shall not be obligated to perform any provisions of this Agreement.

EXHIBIT B

B. If funding for any fiscal year is reduced or deleted by the Budget Act for purposes of this program, the STATE shall have the option to either cancel this Agreement with no liability occurring to the STATE, or offer an Agreement amendment to CONTRACTOR to reflect the reduced amount.

C. The CONTRACTOR agrees that it will provide funds in an amount sufficient, together with the grant, to assure payment of those actual total net PROJECT costs. The funds provided shall include sufficient funds from other eligible sources to provide the PROJECT local matching requirements in accordance with Moving Ahead for Progress in the 21st Century Act and FTA Circular 9070.1G.

D. It is the parties' intention that grant funds will be available for expenditure for two fiscal years, commencing with the State fiscal year that this Agreement is entered into. In the event that funds are not appropriated for the purpose of this Agreement in an amount sufficient to allow the encumbrance of grant funds in accordance with this paragraph, the parties agree that this Agreement will terminate at the end of the fiscal year for which funds have been encumbered. The CONTRACTOR's obligations under this Agreement shall remain in effect until the PROJECT is completed under the terms of this Agreement. Upon expiration date of this Agreement the unreimbursed funds will revert and no further invoices can be paid to CONTRACTOR.

3. **PROMPT PAYMENT CLAUSE**

A. In the event the CONTRACTOR is a certified small business or similar entity, but not a public agency, the STATE shall make payment within 45 days in accordance with Government Code Chapter 4.5 Section 927.

B. The CONTRACTOR shall pay any third-party CONTRACTOR not later than 7-days of receipt of each progress payment unless a longer period is agreed to in writing, as cited in the California Business and Professions Code, Section 7108.5.

C. Should the CONTRACTOR choose to include retainers in third-party contracts, the CONTRACTOR must adhere to the requirements of Section 7108.5 as cited above. The CONTRACTOR must ensure prompt and full payment of retainage to third-party CONTRACTORs no later than 30 days after the third-party CONTRACTOR's work is satisfactorily completed, as cited in 49 CFR Part 26.29.

4. **PROJECT PAYMENT CLOSE OUT**

A. CONTRACTOR agrees that once PROJECT is complete, any remaining balance will be returned to the STATE for distribution or reallocation of future grants in support of the FTA Section 5319 program.

B. Upon successful completion of the PROJECT or upon termination by STATE, the parties shall determine the amount of compensation, if any, to be repaid by the CONTRACTOR to STATE in order to avoid any STATE liability to FTA due to payments erroneously made to the CONTRACTOR in excess of the total PROJECT amount eligible for Federal reimbursement.

EXHIBIT C

GENERAL TERMS AND CONDITIONS FOR ALL FEDERAL GRANT PROGRAM

1. Subrecipient. For the purpose of this Agreement, the CONTRACTOR is the subrecipient as referenced in the Moving Ahead for Progress in the 21st Century Act (MAP-21, Pub. L. 112-141). As a grant subrecipient of FTA funds the CONTRACTOR agrees to comply with the Federal statutes, regulations, executive orders, directives and administrative requirements which relate to applications made to and grants received from FTA including but limited to the USDOT FTA Master Agreement (15), October 1, 2008 and FTA C 9070.1G, Enhanced Mobility of Seniors and Individuals with Disabilities Program Guidance and Application Instructions, or FTA C 9040.1F, Nonurbanized Area Formula Program Guidance and Grant Application Instruction.

2. Approval.

   A. Except as provided herein this Agreement is of no force or effect until signed by both parties and approved by the STATE.

   B. The STATE reserves the right to sign and approve the Agreement provided however, the commencement of work should not be authorized until the expenditure of federal funds has been authorized by the FTA for a specific Federal fiscal year. The CONTRACTOR may not commence performance until federal authorization has been obtained.

   C. It is mutually understood between the parties that this Agreement may have been written before ascertaining the availability of congressional or legislative appropriation of funds, for the mutual benefit of both parties in order to avoid program and fiscal delays that would occur if the Agreement were executed after the determination was made.

   D. This Agreement is valid and enforceable only if sufficient funds are made available to the STATE by the United States Government or the California State Legislature for the purpose of this program. In addition, this Agreement is subject to any additional restrictions, limitations, conditions, or any statute enacted by the Congress or the State Legislature that may affect the provisions, terms or funding of this Agreement in any manner.

   E. It is mutually agreed that if the Congress or the State Legislature does not appropriate sufficient funds for the program, this Agreement shall be amended to reflect any reduction in funds.

   F. State Law. This Agreement shall be interpreted according to the laws of the State of California, except as to those provisions where federal law shall apply; as to those provisions where federal law applies, the rules, regulations, statutes and executive orders of the federal government shall be applicable. In the event that any provision of this Agreement requires that CONTRACTOR observe or comply with or perform any activity in contradiction or violation of State law, the CONTRACTOR will notify STATE at once, in writing, of such provision. The remaining Agreement provisions shall not be affected. The unenforceable provisions(s) shall be renegotiated by the CONTRACTOR and STATE for mutually agreed appropriate changes and/or modifications; and the CONTRACTOR shall proceed, as soon as is possible, with PROJECT.

   G. No issuance of a Standard Agreement or amendments will be provided until proof of the project has been programmed and is in an approved FSTIP.

3. Enforcement/Remedies for Non-Compliance. If a CONTRACTOR materially fails to comply with any term of this Agreement, or fails to refund any moneys due STATE, the STATE may take one or more of the following actions:

EXHIBIT C

A. Disallow or temporarily withhold cash payments pending correction of the deficiency by the CONTRACTOR.
B. Wholly or partially suspend or terminate the current award for the CONTRACTOR's PROJECT.
C. Withhold future awards to the CONTRACTOR for the program.
D. Withhold or demand a transfer of an amount equal to the amount paid by or owed to STATE from remaining grant balance and/or future apportionments, or any other funds due CONTRACTOR from the Federal Trust Fund or any other sources of funds.
E. Take other remedies that may be legally available.

4. Timeliness. Time is of the essence in this Agreement and shall be signed and returned by the CONTRACTOR within 90 calendar days after mailing. In the event this Agreement is not signed and returned within 90 days of mailing, the PROJECT identified in Exhibit A of this Agreement from FTA's grant award may be withdrawn and cancelled at the STATE's discretion.

5. Amendment. No amendment or alteration of the terms of this Agreement shall be valid unless submitted in writing, signed by the parties and approved as required. No oral understanding or agreement not incorporated in this Agreement is binding on any of the parties. Amendments shall be signed and returned by the CONTRACTOR within 90 calendar days after mailing. In the event this Agreement is not signed within 90 days of mailing, the PROJECT identified in Exhibit A of this amendment from FTA's grant award may be withdrawn and cancelled at the STATE's discretion.

6. Assignment. This Agreement is not assignable by the CONTRACTOR, either in whole or in part, without the consent of the STATE in the form of a formal written amendment.

7. Independent Contractor. The CONTRACTOR, and the agents and employees of the CONTRACTOR, in the performance of this Agreement, shall act in an independent capacity and not as officers or employees or agents of the STATE.

8. Antitrust Claims. The CONTRACTOR by signing this Agreement hereby certifies that if these services or goods are obtained by means of a competitive bid, the CONTRACTOR shall comply with the requirements of the Government Codes Sections set out below.

   A. The Government Code Chapter on Antitrust claims contains the following definitions:

      1. "Public purchase" means a purchase by means of competitive bids of goods, services, or materials by the STATE or any of its political subdivisions or public agencies on whose behalf the Attorney General may bring an action pursuant to subdivision (c) of Section 16750 of the Business and Professions Code.

      2. "Public purchasing body" means the STATE or the subdivision or agency making a public purchase. Government Code Section 4550.

   B. In submitting a bid to a public purchasing body, the bidder offers and agrees that if the bid is accepted, it will assign to the purchasing body all rights, title, and interest in and to all causes of action it may have under Section 4 of the Clayton Act (15 U.S.C. Sec. 15) or under the Cartwright Act (Chapter 2 (commencing with Section 16700) of Part 2 of Division 7 of the Business and Professions Code), arising from purchases of goods, materials, or services by the bidder for sale to the purchasing body pursuant to the bid. Such assignment shall be made and become effective at the time the purchasing body tenders final payment to the bidder. Government Code Section 4552.

   C. If an awarding body or public purchasing body receives, either through judgment or settlement, a monetary recovery for a cause of action assigned under this chapter, the assignor shall be entitled to receive reimbursement for actual legal costs incurred and may, upon demand, recover from the

EXHIBIT C

public body any portion of the recovery, including treble damages, attributable to overcharges that were paid by the assignor but were not paid by the public body as part of the bid price, less the expenses incurred in obtaining that portion of the recovery. Government Code Section 4553.

D. Upon demand in writing by the assignor, the assignee shall, within one year from such demand, reassign the cause of action assigned under this part if the assignor has been or may have been injured by the violation of law for which the cause of action arose and (a) the assignee has not been injured thereby, or (b) the assignee declines to file a court action for the cause of action. See Government Code Section 4554.

9. Child Support Compliance Act. "For any Agreement in excess of $100,000, the CONTRACTOR acknowledges in accordance with Public Contract Code 7110, that:

   A. The CONTRACTOR recognizes the importance of child and family support obligations and shall fully comply with all applicable state and federal laws relating to child and family support enforcement, including, but not limited to, disclosure of information and compliance with earnings assignment orders, as provided in Chapter 8 (commencing with section 5200) of Part 5 of Division 9 of the Family Code; and

   B. The CONTRACTOR, to the best of its knowledge is fully complying with the earnings assignment orders of all employees and is providing the names of all new employees to the New Hire Registry maintained by the California Employment Development Department."

10. Unenforceable Provision. In the event that any provision of this Agreement is unenforceable or held to be unenforceable by a court of competent jurisdiction, then the parties agree that all other provisions of this Agreement have force and effect and shall not be affected thereby.

11. Priority Hiring Considerations: If this Agreement includes services in excess of $200,000, the CONTRACTOR shall give priority consideration in filling vacancies in positions funded by the Agreement to qualified recipients of aid under Welfare and Institutions Code Section 11200 in accordance with Pub. Contract Code §10353.

12. State Management Plan. The STATE is designated by the Governor to administer the FTA Sections 5310 and 5311 programs in California. The implementation and administration of the FTA programs are outlined in the each program's State Management Plan and is available at the Department of Transportation, Division of Rail and Mass Transportation website at, http://www.dot.ca.gov/hq/MassTrans/.

13. Annual Certification and Assurances. As requested by the STATE, the CONTRACTOR must complete and submit to the STATE the annual FTA Certifications and Assurances for Federal Transit Administration Assistance Programs, Certifications and Assurances Checklist and Signature Page to be provided by STATE.

14. Exclusionary or Discriminatory Specifications. Apart from inconsistent requirements imposed by Federal statue or regulations, the CONTRACTOR agrees that it will comply with the requirements of 49 U.S.C. Section 5323(h)(2) by refraining from using any Federal assistance funds awarded by STATE on behalf of the FTA to support procurements using exclusionary or discriminatory specifications.

15. Buy America. The CONTRACTOR shall comply with the Buy America requirements of 49 USC 5323(j) and 49 CFR Part 661 for all procurements of steel, iron and manufactured products used in PROJECT. Buy America requirements apply to all purchases, including materials and supplies funded as operating costs, if the purchase exceeds the threshold for small purchases (currently $100,000). Separate

EXHIBIT C

requirements for rolling stock are set out at 49 USC 5323(j)(2)(c) and 49 CFR 661.11. Rolling stock must be assembled in the United States and have a 60 percent domestic content.

16. U.S. Flag Requirements.

    A. Shipments by Ocean Vessel. For third-party contracts that may involve equipment, materials, or commodities which may be transported by ocean vessels, the CONTRACTOR and subcontractors must comply with 46 U.S.C. Section 55303 and 46 CFR Part 381, "Cargo Preference-U.S. Flag Vessels."

    B. Shipments by Air Carrier. For third-party contracts that may involve shipments of federally assisted property by air carrier, the CONTRACTOR and subcontractors must comply with the "Fly America" Act and 49 U.S.C. Section 40118, "Use of United States Flag Air Carriers," and 41 CFR Sections 301-10.131 through 301-10.143.

    C. Project Travel. In accordance with 49 U.S.C. 40118 and 41 CFR Part 301-10, the CONTRACTOR and all subcontractors are required to use U.S. Flag air carriers for U.S. Government-financed international air travel and transportation, to the extent such service is available or applicable.

17. Accounting Records. The CONTRACTOR shall establish and maintain separate accounting records and reporting procedures specified for the fiscal activities of the PROJECT. The CONTRACTOR's accounting system shall conform to generally accepted accounting principles (GAAP) and uniform standards that may be established by STATE. All records shall provide a breakdown of total costs charged to the PROJECT including properly executed payrolls, time records, invoices and vouchers.

18. Worker's Compensation. The CONTRACTOR hereby warrants that it carries Workers' Compensation Insurance on all of its employees who will be engaged in the performance of this Agreement. If staff provided by the CONTRACTOR is defined as independent contractors, this clause does not apply.

19. Vehicle Operator Licensing. The CONTRACTOR is required to comply with all applicable requirements of the Federal Motor Carrier Safety Administration regulations and the California Vehicle Code including, but not limited to, the requirement that all vehicle operators have a valid State of California driver's license, including any special operator license that may be necessary for the type of vehicle operated.

20. Audit Requirements. The CONTRACTOR shall be responsible for meeting the audit requirements of OMB Circular A-133, or any revision or supplement thereto. The required audit reports shall be submitted to the State Controller with a copy to STATE in conformance with the compliance guidelines issued by the California Department of Finance. The cost of audits made in accordance with the provisions of OMB Circular A-133 is an allowable charge to this PROJECT, to the extent provided by OMB Circular A-133.

21. Record Keeping. The CONTRACTOR and all subcontractors shall maintain all books, documents, papers, accounting records, and other evidence pertaining to the performance of this Agreement. All parties shall make such materials available at their respective offices at all reasonable times during the performance period and for three (3) years from the date of final payment under this Agreement and all subrecipient contracts.

22. Examination of Records. STATE'S Audits Office, the State Auditor General, and any duly authorized representative of the Federal government shall have access to any books, records, and documents of the CONTRACTOR and its subcontractors that are pertinent to this Agreement for audits, examinations, excerpts, and transactions, and copies thereof shall be furnished if requested. The CONTRACTOR shall include a clause to this effect in every subcontract entered into relative to the PROJECT.

EXHIBIT C

23. Examination of Accounting. The CONTRACTOR'S accounting system and billing procedures are subject to audit by the STATE prior to contract award, and accounting records pertaining to work performed and costs billed to the STATE are subject to audit for a period of three (3) years after date of final payment under this Agreement. If the CONTRACTOR fails to retain records such as employee time cards, payroll records, travel records, equipment time and cost records, billings from subcontractors, material and equipment suppliers records that are sufficient to permit audit verification of the validity of cost charged to the STATE, the CONTRACTOR will be liable for reimbursement to the STATE of all unsubstantiated billings.

24. Reporting Forms. The CONTRACTOR shall furnish the STATE with any additional reports or data that may be required by FTA or other federal agencies. Such reports and/or data will be submitted on forms provided by the STATE.

25. Debarment and Suspension. The CONTRACTOR agrees as follows:

    A. The CONTRACTOR agrees to comply with the requirements of Executive Order Nos. 12549 and 12689, "Debarment and Suspension," 31 U.S.C. Section 6101 note; and U.S. DOT regulations on Debarment and Suspension and 49 CFR Part 29.

    B. Unless otherwise permitted by FTA, the CONTRACTOR agrees to refrain from awarding any third-party contract of any amount to or entering into any sub-agreement of any amount with a party included in the "U.S. General Services Administration's (U.S. GSA) List of Parties Excluded from Federal procurement or Non-procurement Program," implementing Executive Order Nos. 12549 and 12689, "Debarment and suspension" and 49 CFR Part 29. The list also include the names of parties debarred, suspended, or otherwise excluded by agencies, and contractors declared ineligible for contract award under statutory or regulatory authority other than Executive Order Nos. 12549 and 12689.

    C. Before entering into any sub-agreements with any subrecipient, the CONTRACTOR agrees to obtain a debarment and suspension certification from each prospective recipient containing information about the debarment and suspension status and other specific information of that subrecipient and its "principals," as defined at 49 CFR Part 29.

    D. Before entering into any third-party contract exceeding $25,000, the CONTRACTOR agrees to obtain a debarment and suspension certification from each third-party contractor containing information about the debarment and suspension status of that third-party contractor and its "principals," as defined at 49 CFR 29.105(p). The CONTRACTOR also agrees to require each third-party contractor to refrain from awarding any third-party sub-contracts of any amount (at any tier) to a debarred or suspended sub-contractor, and to obtain a similar certification from any third-party subcontractor (at any tier) seeking a contract exceeding $25,000.

26. Compliance with Federal Statutes. During the performance of this Agreement, the CONTRACTOR, its assignees and successors in interest, agree to comply with all Federal statutes and regulations applicable to grantee recipients under the Federal Transit Act, including, but not limited to the following:

    A. Nondiscrimination- In accordance with Title VI of the Civil Rights Act, as amended, 42 U.S.C. § 2000d, section 303 of the Age Discrimination Act of 1975, as amended, 42 U.S.C. § 6102, section 202 of the Americans with Disabilities Act of 1990, 42 U.S.C. § 12132, and Federal transit law at 49 U.S.C. § 5332, the Contractor agrees that it will not discriminate against any employee or applicant for employment because of race, color, creed, national origin, sex or age. In addition, the Contractor agrees to comply with applicable Federal implementing regulations and other implementing requirements FTA may issue.

EXHIBIT C

B. Equal Employment Opportunity -The following equal employment opportunity requirements apply to the underlying contract:

(a) Race, Color, Religion, Sex, National Origin, - In accordance with Title VII of the Civil Rights Act, as amended, 42 U.S.C. §2000e, and Federal transit laws at 49 U.S.C. § 5332, the Contractor agrees to comply with all applicable equal employment opportunity requirements of U.S. Department of Labor (U.S. DOL) regulations, "Office of Federal Contract Compliance Programs, Equal Employment Opportunity, Department of Labor," 41 C.F.R. Parts 60 et seq., (which implement Executive Order No. 11246, "Equal Employment Opportunity," as amended by Executive Order No. 11375, "Amending Executive Order 11246 Relating to Equal Employment Opportunity," 42 U.S.C. § 2000e note), and with any applicable Federal statutes, executive orders, regulations, and Federal policies that may in the future affect construction activities undertaken in the course of the Project. The Contractor agrees to take affirmative action to ensure that applicants are employed, and that employees are treated during employment, without regard to their race, color, or national origin. Such action shall include, but not be limited to, the following: employment, upgrading, demotion or transfer, recruitment or recruitment advertising, layoff or termination; rates of pay or other forms of compensation; and selection for training, including apprenticeship. In addition, the Contractor agrees to comply with any implementing requirements FTA may issue.

(b) Age- In accordance with section 4 of the Age Discrimination in Employment Act of 1967, as amended, 29 U.S.C. § § 623 and Federal transit law at 49 U.S.C. § 5332, the Contractor agrees to refrain from discrimination against present and prospective employees for reason of age. In addition, the Contractor agrees to comply with any implementing requirements FTA may issue.

(c) Disabilities- In accordance with section 102 of the Americans with Disabilities Act, as amended, 42 U.S.C. §12112, the Contractor agrees that it will comply with the requirements of U.S. Equal Employment Opportunity Commission, "Regulations to Implement the Equal Employment Provisions of the Americans with Disabilities Act," 29 C.F. R. Part 1630, pertaining to employment of persons with disabilities. In addition, the Contractor agrees to comply with any implementing requirements FTA may issue.

(d) The Contractor also agrees to include these requirements in each subcontract financed in whole or in part with Federal assistance provided by FTA, modified only if necessary to identify the affected parties.

C. In accordance with 49 CFR Part 21 and as described in FTA Circular 4702.1B, and the California Department of Transportation Title VI Program Plan, and upon request from the STATE, the CONTRACTOR shall comply with the following reporting requirements. The CONTRACTOR is also responsible for ensuring compliance of each third-party contractor at any tier of the PROJECT.

1. Prepare and submit a Title VI Program.

2. Establish and maintain a Title VI complaint procedures.

3. Record Title VI investigations, complaints, and lawsuits.

4. Provide meaningful access to Limited English Proficient Persons.

5. Notify beneficiaries of protection under Title VI.

EXHIBIT C

6. Provide additional information upon request.

7. Provide an Annual Title VI Certification and Assurance.

8. Guidance on conducting an Analysis of Construction PROJECTS.

9. Guidance on promoting Inclusive Public Participation.

10. Report minority representation on transit related Planning and Advisory Bodies.

The Following items do not apply to providers of public transportation that only operate demand response service. Demand response includes general public paratransit, Americans with Disabilities Act complementary paratransit, and section 5310 non-profits that only serve their own clientele (closed door service). Providers of public transportation that operate fixed route and demand response service, or only fixed route service, are responsible items 11 and 12, these requirements only apply to fixed route service.

11. Service standards.

a. Vehicle load for each mode
b. Vehicle headway for each mode
c. On time performance for each mode
d. Service availability for each mode

12. Service policies

a. Transit Amenities for each mode
b. Vehicle Assignment for each mode

Please refer to the Title VI Program Checklist in Appendix A at the end of this exhibit for more detailed information on the Title VI Program requirements.

D. Solicitations for Subcontracts Including Procurements of Materials and Equipment. In all solicitations, either by competitive bidding or negotiation by the CONTRACTOR for work to be performed under a subcontract, including procurements of materials or leases of equipment, each potential subcontractor or supplier shall be notified by the CONTRACTOR of the CONTRACTOR's obligations under this Agreement and the Regulations relative to nondiscrimination on the grounds of race, color, or national origin.

E. Information and Reports. The CONTRACTOR shall provide all information and reports required by the Regulations, or directives issued pursuant thereto, and shall permit access to its books, records, accounts, other sources of information, and its facilities as may be determined by the STATE or the FTA to be pertinent to ascertain compliance with such Regulations or directives. Where any information required of a contractor is in the exclusive possession of another who fails or refuses to furnish this information, the CONTRACTOR shall so certify to the STATE or the FTA as appropriate, and shall set forth what efforts have been made to obtain the information.

F. Sanctions for Noncompliance. In the event of the CONTRACTOR's noncompliance with the nondiscrimination provisions of this Agreement, the STATE shall impose such contract sanctions as it or the FTA may determine to be appropriate, including, but not limited to:

1. Withholding of payments to the CONTRACTOR under the Agreement until the CONTRACTOR complies, and/or;

EXHIBIT C

2. Cancellation, termination or suspension of the Agreement, in whole or in part.

G. Incorporation of Provisions. The CONTRACTOR shall include the provisions of these paragraphs (a) through (f) in every subcontract, including procurements of materials and leases of equipment, unless exempt by the Regulations or directives issued pursuant thereto. The CONTRACTOR will take such action with respect to any subcontractor or procurement as the STATE or the FTA may direct as a means of enforcing such provisions including sanctions for noncompliance; provided, however, that in the event a CONTRACTOR becomes involved in, or is threatened with, litigation with a subcontractor or supplier as a result of such direction, the CONTRACTOR may request the STATE to enter into such litigation to protect the interest of the STATE, and, in addition, the CONTRACTOR may request the United States to enter into such litigation to protect the interests of the United States

27. Disadvantaged Business Enterprise. The CONTRACTOR agrees to:

A. Comply with U.S. DOT regulations, "Participation by Disadvantaged Enterprises in Department of Transportation Financial Assistance Programs", 49 CFR Part 26 and will cooperate with STATE with regard to maximum utilization of disadvantaged business enterprises, and will use its best efforts to ensure that disadvantaged business enterprises shall have the maximum opportunity to compete for sub contractual work under this Agreement.

B. Complete and submit to STATE a DBE Implementation Agreement with the DOT-213 Standard Agreement. STATE shall provide the Implementation Agreement to the CONTRACTOR prior to vehicle ordering.

C. Report twice annually on DBE participation in their contracting opportunities, their award/commitments and actual payments.

D. The CONTRACTOR shall not terminate a DBE subcontractor without prior approval by the STATE (49 CFR 26.53(f)(1)(i)). The recipient that terminates a DBE must make a good faith effort to find a replacement to perform at least the same amount of work under the contract to meet the contract goal established for the work. The good faith effort should be documented and submitted to the State within a reasonable time after obtaining approval by the State to terminate an existing DBE (49 CFR 26.53(g)).

E. The recipient shall not discriminate on the basis of race, color, national origin or sex in the award and performance of any U.S. DOT-assisted contract or in the administration of its DBE program or the requirements of 49 CFR Part 26. The recipient's DBE program, as required by 49 CFR Part 26 and as approved by U.S. DOT, is incorporated by reference in this Agreement. Implementation of this program is a legal obligation and failure to carry out its terms shall be treated as a violation of this Agreement. Upon notification to the recipient of its failure to carry out its approved program, the STATE may impose sanctions as provided for under Part 26 and may, in appropriate cases, refer the matter for enforcement under 18 U.S.C. 1001 and/or the Program Fraud Civil Remedies Act of 1986 (31 U.S.C, 3801 et seq.).

F. The CONTRACTOR, subrecipient or subcontractor shall not discriminate on the basis of race, color, national origin, or sex in the performance of this contract. The CONTRACTOR shall carry out applicable requirements of 49 CFR Part 26.13(b) in the award and administration of U.S. DOT-assisted contracts. Failure by the CONTRACTOR to carry out these requirements is a material breach of this contract, which may result in the termination of this contract or such other remedy as the recipient deems appropriate.

EXHIBIT C

28. Section 504 and Americans with Disabilities Act Program Requirements. The CONTRACTOR will comply with 49 CFR. Parts 27, 37 and 38, implementing the Americans with Disabilities Act and Section 504 of the Rehabilitation Act or 1973, 29 U.S.C. Section 794, as amended.

29. Warranty for Application to the Small Urban and Rural Program. The CONTRACTOR accepts the terms and conditions of the "Special Section 13(c) Warranty for Application to the Small Urban and Rural Program," as executed by the Secretary of Labor and the Secretary of Transportation on May 31, 1979, and those terms and conditions are incorporated by reference into this Agreement.

30. Public Lands. The CONTRACTOR agrees to refrain from using in its PROJECT any publicly owned land from a park, recreation area, or wildlife or waterfowl refuge of National, State, or local significance as determined by the Federal, State, or local officials having jurisdiction thereof, and also refrain from using in its PROJECT any land from a historic site of National, State, or local significance unless the Federal Government makes the specific findings as required by 49 U.S.C. § 303.

31. Energy Conservation. The CONTRACTOR agrees to comply with the mandatory energy efficiency standards and policies within the applicable State energy conservation plans issued in compliance with the Energy Policy and Conservation Act, 42, U.S.C. §§ 6321 *et seq*.

32. Receipt of Commission. The CONTRACTOR warrants that it has not paid, and also agrees not to pay, any bonus or commission for the purpose of obtaining an approval of its application for these funds obtained as a consequence of this Agreement.

33. Conflict of Interest.

    A. In accordance with 41 U.S.C. § 22, no member of or delegate to the Congress of the United States shall be admitted to any share or part of this Agreement or to any benefit arising there from.

    B. The CONTRACTOR certifies that its employees and the officers of its governing body shall avoid any actual or potential conflicts of interest, and that no officer or employee who exercises any functions or responsibilities in connection with this Agreement shall have any personal financial interest or benefit which either directly or indirectly arises from this Agreement.

    C. The CONTRACTOR shall establish safeguards to prohibit its employees or its officers from using their positions for a purpose which could result in private gain or which gives the appearance of being motivated for private gain for themselves or others, particularly those with whom they have family, business, or other ties.

    D. The CONTRACTOR will not be awarded a contract if the financial interests are held by a current officer or employee of the STATE. Additionally, a contract will not be awarded to an officer or employee of the STATE to provide goods and service. Likewise, the CONTRACTOR officials and employees shall also avoid actions resulting in or creating an appearance of:

        1. Using an official position for private gain;

        2. Giving preferential treatment to any particular person;

        3. Losing independence or impartiality;

        4. Affecting adversely the confidence of the public or local officials in the integrity of the program.

EXHIBIT C

E. Former STATE employees will not be awarded a contract for 2 years from the date of separation if that employee had any part of the decision making process relevant to the Agreement, or for 1 year from the date of separation if that employee was in a policy making position in the same general subject area as the proposed contract within the 12-month period to his or her separation from State service.

F. Neither the CONTRACTOR nor any of its employees, suppliers or subcontractors shall enter into any contract, subcontract, or arrangement in connection with the PROJECT or any property included or planned to be included in the PROJECT, in which any member, officer, or employee of the CONTRACTOR or its subcontractor, during the PROJECT term and for one year thereafter, has any direct or indirect conflict of interest. If any such present or former member, officer, or employee involuntarily acquires or had acquired prior to the beginning of the PROJECT term any such interest, and if such interest is immediately disclosed to the CONTRACTOR and such disclosure is entered upon the minutes of the CONTRACTOR's written report to STATE of such interest, the STATE, may waive the conflict of interest; provided that the officer or employee shall not participate in any action by the CONTRACTOR or the locality relating to such contract, subcontract, or arrangement.

G. The CONTRACTOR shall insert in all contracts entered into in connection with the PROJECT or with any property included or planned to be included in any PROJECT, and shall require its contractors to insert in each of their subcontracts, the following provision:

"No member, officer, or employee of the CONTRACTOR or of the locality during the PROJECT term or for one year thereafter shall have any interest, direct or indirect, in this Agreement or the proceeds thereof."

H. The provisions of this subsection shall not be applicable to any agreement between the CONTRACTOR and its fiscal depositories or to any agreement for utility services, the rates for which are fixed or controlled by a governmental agency.

34. Lobbying.

A. The CONTRACTOR agrees that it will not use Federal assistance funds to support lobbying. In accordance with 31 U.S.C. and U.S. DOT Regulations, "New Restrictions on Lobbying," 49 C.F.R. Part 20, if the CONTRACTOR'S PROJECT exceeds $100,000, FTA will not make any Federal assistance available to the CONTRACTOR until FTA has received the CONTRACTOR'S certification that the CONTRACTOR has not and will not use Federal appropriated funds to pay any person or organization to influence or attempt to influence an officer or employee of any Federal agency, a member of Congress, an officer or employee of congress, or an employee of a member of Congress in connection with the awarding of any Federal grant, cooperative agreement or any other Federal award from which funding for the PROJECT is originally derived, consistent with 31 U.S.C. Section 1352, and;

B. If applicable, if any funds other than Federal appropriated funds have been paid or will be paid to any person for influencing or attempting to influence an officer or employee of any Federal agency, a Member of Congress, an officer or employee of Congress, or an employee of a Member of Congress, in connection with this Federal contract, grant, loan, or cooperative agreement, the undersigned shall complete and submit Standard Form-LLL, "Disclosure Form to Report Lobbying," in accordance with the form instructions.

C. The CONTRACTOR shall require that the language of this certification be included in the award documents for all sub-awards at all tiers (including subcontracts, sub-grants, and contracts under grants, loans, and cooperative agreements) which exceed $100,000 and that all subrecipients shall certify and disclose accordingly.

EXHIBIT C

This certification is a material representation of facts upon which reliance was placed when this Agreement was made or entered into. Submission of this certification is a prerequisite for making or entering into this Agreement imposed by Section 1352, Title 31, U. S. Code. Any person who fails to file the required certification shall be subject to a civil penalty of not less than $10,000 and not more than $100,000 for each such failure.

35. Program Fraud and False or Fraudulent Statements or Related Acts.

A. The CONTRACTOR acknowledges that the provisions of the Program Fraud Civil Remedies Act of 1986, as amended, 31 U.S.C. § 3801 et seq. and U.S. DOT regulations, "Program Fraud Civil Remedies," 49 C.F.R. Part 31, apply to its actions pertaining to this PROJECT. Upon execution of an underlying contract, the CONTRACTOR certifies or affirms the truthfulness and accuracy of any statement it has made, it makes, it may make, or causes to be made, pertaining to that underlying contract or the FTA assisted PROJECT for which this contracted work is being performed. In addition to other penalties that may be applicable, the CONTRACTOR further acknowledges that if it makes, or causes to be made, a false, fictitious, or fraudulent claim, statement, submission, or certification, the Federal Government reserves the right to impose the penalties of the Program Fraud Civil Remedies Act of 1986 on the CONTRACTOR to the extent the Federal Government deems appropriate.

B. The CONTRACTOR also acknowledges that if it makes, or causes to be made, a false, fictitious, or fraudulent claim, statement, submission, or certification to the Federal Government under a contract connected with a PROJECT that is financed in whole or in part with Federal assistance originally awarded by FTA under the authority of 49 U.S.C. § 5307, the Government reserves the right to impose the penalties of 18 U.S.C. § 1001 and 49 U.S.C. § 5307(n)(1) on the CONTRACTOR, to the extent the Federal Government deems appropriate.

C. The CONTRACTOR agrees to include the above two clauses in each subcontract financed in whole or in part with Federal assistance provided by FTA. It is further agreed that these clauses shall not be modified, except to identify the subcontractor who will be subject to the provisions.

36. Contracts Involving Federal Privacy Act Requirements. The following requirements apply to the CONTRACTOR and its employees that administer any system of records on behalf of the Federal Government under any contract:

A. The CONTRACTOR agrees to comply with, and assures the compliance of its employees with, the information restrictions and other applicable requirements of the Privacy Act of 1974, 5 U.S.C. § 552a. Among other things, the CONTRACTOR agrees to obtain the express consent of the Federal Government before the CONTRACTOR or its employees operate a system of records on behalf of the Federal Government. The CONTRACTOR understands that the requirements of the Privacy Act, including the civil and criminal penalties for violation of that Act, apply to those individuals involved and that failure to comply with the terms of the Privacy Act may result in termination of the underlying Agreement.

B. The CONTRACTOR also agrees to include these requirements in each subcontract to administer any system of records on behalf of the Federal Government financed in whole or in part with Federal assistance provided by FTA.

37. Drug-Free Workplace. The CONTRACTOR certifies by signing this Agreement that it will provide a drug-free workplace, and shall establish policy prohibiting activities involving controlled substances in

EXHIBIT C

compliance with Government code Section 8355, et seq. The CONTRACTOR is required to include the language of this certification in award documents for all sub-awards at all tiers (including subcontracts, contracts under grants, and cooperative agreements) and that all subrecipients shall certify and disclose accordingly. To the extent the CONTRACTOR, any third-party contractor at any tier, any subrecipient at any tier, or their employees, perform a safety sensitive function under the PROJECT, the CONTRACTOR agrees to comply with, and assure the compliance of each affected third-party contractor any tier, each affected subrecipient at any tier, and their employees with 49 U.S.C. Section 5331, and FTA regulations, "Prevention of Alcohol Misuse and Prohibited Drug use in Transit Operations," 49 CFR Part 655.

38. Charter Service Operations. The CONTRACTOR agrees to comply with 49 U.S.C. Section 5323(d) and 49 CFR Part 604, which provides that recipients and subrecipients of FTA assistance are prohibited from providing charter service using federally funded equipment or facilities if there is at least one private charter operator willing and able to provide the service, except under one of the exceptions listed at 49 CFR-Subpart B. Any charter service provided under one of the exceptions must be "incidental," i.e., it must not interfere with or detract from the provision of mass transportation. The CONTRACTOR assures and certifies that the revenues generated by its incidental charter bus operations (if any) are, and shall remain, equal to or greater than the cost (including depreciation on Federally assisted equipment) of providing the service. The CONTRACTOR understands that the requirements of 49 CFR part 604 will apply to any charter service provided, the definitions in 49 CFR part 604 apply to this Agreement, and any violation of this Agreement may require corrective measures and the imposition of penalties, including debarment from the receipt of further Federal assistance for transportation.

39. School Bus Operations. Pursuant to 49 U.S.C. 5323(F) and 49 CFR Part 605, the CONTRACTOR agrees that it and all its subcontractors will: (1) engage in school transportation operations in competition with private school transportation operators only to the extent permitted by an exception provided by 49 U.S.C. 5323 (f) and implementing regulations, and (2) comply with requirements of 49 CFR part 605 before providing any school transportation using equipment or facilities acquired with Federal assistance awarded by FTA and authorized by 49 U.S.C. Chapter 53 or Title 23 U.S.C. for transportation projects. The CONTRACTOR understands that the requirements of 49 CFR part 605 will apply to any school transportation it provides, that the definitions of 49 CFR part 605 apply to any school transportation agreement, and a violation of this Agreement may require corrective measures and the imposition of penalties, including debarment from the receipt of further Federal assistance for transportation.

40. Use of $1 Coins. As applicable, and to comply with Section 104 of the Presidential $1 Coin Act of 2006, 31 U.S.C. Section 5312(p), the CONTRACTOR must ensure that FTA assisted property that requires the use of coins or currency in public transportation service or supporting service be fully capable of accepting and dispensing $1 coins.

41. Protection of Animals. The CONTRACTOR must ensure that all third-party contractors providing services involving the use of animals must comply with the Animal Welfare Act, 7 U.S.C. Sections 2131 et seq. and Department of Agriculture regulations, "Animal Welfare," 9 CFR Subchapter A, Parts 1,2,3, and 4.

42. Additional Termination Clauses.

    A. Termination for Convenience. When it is in the STATE'S best interest, the STATE reserves the right to terminate this Agreement, in whole or in part, at any time by providing a ten (10) day written notice to the CONTRACTOR. The CONTRACTOR shall be paid its costs, including contract close-out costs, and profit on work performed up to the time of termination. The CONTRACTOR shall promptly submit its termination claim to the STATE. If the CONTRACTOR has any property in its possession belonging to the STATE, the CONTRACTOR will account for the same, and dispose of it in the manner the STATE directs.

EXHIBIT C

B. Termination for Default. The STATE may terminate this Agreement upon a finding that the CONTRACTOR has not made satisfactory progress toward procuring the PROJECT equipment, services, salary and wages, as appropriate, within twelve (12) months of execution of this Agreement, has not billed for operating assistance funds within twelve (12) months of execution of this Agreement, or that the CONTRACTOR is otherwise not complying with the terms of this Agreement. Termination shall be by written notice specifying the reason for termination and giving the CONTRACTOR thirty (30) days to correct the default. The STATE shall be the sole judge as to whether the CONTRACTOR's corrective measures are adequate. If the CONTRACTOR fails to remedy to STATE's satisfaction the breach or default or any of the terms, covenants, or conditions of this Agreement the STATE shall have the right to terminate the Agreement without any further obligation to the CONTRACTOR. Any such termination for default shall not in any way operate to preclude the STATE from also pursuing all available remedies against the CONTRACTOR.

C. Period of Performance Extension. If it is later determined by the STATE that the CONTRACTOR had an excusable reason for not performing, such as a strike, fire, or flood, events which are not the fault of or are beyond the control of the CONTRACTOR, the STATE, after setting up a new delivery of performance schedule, may allow the CONTRACTOR to continue work, or treat the termination as a termination for convenience.

D. Mutual Termination. The PROJECT may also be terminated if the STATE and the CONTRACTOR agree that its continuation would not produce beneficial results commensurate with the further expenditure of funds or if there are inadequate funds to operate the PROJECT equipment or otherwise complete the PROJECT.

43. Disputes. The STATE and the CONTRACTOR shall deal in good faith and attempt to resolve potential disputes informally. If the dispute persists, the CONTRACTOR shall submit to the authorized STATE Representative for this Agreement or designee a written demand for a decision regarding the disposition of any dispute arising under this Agreement. The STATE Representative shall make a written decision regarding the dispute and will provide it to the CONTRACTOR. The CONTRACTOR shall have an opportunity to challenge the STATE Representative's determination but must make that challenge in writing within ten (10) working days to the STATE's Chief, Office of Federal Transit Grants or his/her designee. [If the CONTRACTOR challenge is not made within the ten (10) day period, the STATE Representative shall become the final decision of the STATE.] The STATE and the CONTRACTOR shall submit written, factual information and supporting data in support of their respective positions. The decision of the STATE's Chief, Office of Federal Transit Grants or his/her designee shall be final, conclusive and binding regarding the dispute, unless the CONTRACTOR commences an action in court of competent jurisdiction to contest the decision in accordance with Division 3.6 of the California Government Code.

44. Procurement. For all procurements of property, supplies, equipment or services under an FTA assisted grant, the CONTRACTOR shall provide full and open competition and comply with the procurement requirements set forth in 49 U.S.C. Section 5325(a), applicable third-party procurement requirements of 49 U.S.C. chapter 53 and other procurement requirements of Federal laws in effect now or as amended to the extent applicable. The CONTRACTOR shall prepare a bid package, including equipment and material specifications or a scope of work. In accordance with applicable U.S. DOT third-party procurement regulations at 2 C.F.R. Part 200 and the provisions of FTA Circular 4220.1F, "Third-Party Contracting Guidance," November 1, 2008, and any later revision thereto, the CONTRACTOR agrees that it may not use FTA assistance to support its procurements unless there is satisfactory compliance with Federal laws and regulations including but not limited to the following:

EXHIBIT C

A. To state clearly that the final contract award to any bidder requires prior written approval by the STATE and that bids are consistent with the PROJECT equipment description identified in Exhibit A, Scope of Work.

B. To comply with applicable Federal laws and regulations including, but not limited to, Federal transit laws at 49 U.S.C. Chapter 53, FTA regulations, and other Federal laws and regulations that contain requirements applicable to FTA recipients and their FTA assisted procurements. Also, to include all required Federal procurement provisions in each subcontract financed in whole or in part with Federal assistance provided by FTA.

C. For all contracts and subcontracts financed with Federal assistance, to comply with cargo preference requirements of 46 U.S.C. § 1241 and 46 CFR Part 381 when contracts involve equipment, materials, or commodities which may be transported by ocean vessels.

D. To comply with the requirements of 49 U.S.C. § 5323 (c) and FTA regulations, "Bus Testing", 49 C.F.R. Part 665, and any revision thereto.

E. To comply with the requirements of 49 U.S.C. § 5323(l) and FTA regulations, "Pre-Award and Post-Delivery Audits of Rolling Stock Purchases," 49 C.F.R. Part 663, and any revision thereto.

F. To comply with the requirements of 49 U.S.C. § 5325(b) to award a third-party contract using a competitive procurement process.

G. In accordance with 49 U.S.C. § 5325(e)(1), in the procurement of rolling stock, may not enter into a multi-year contract to purchase additional rolling stock and replacement parts with options exceeding five (5) years after the date of the original contract.

H. To comply with 49 U.S.C. § 5325(f), agrees that any third-party contract award it makes for rolling stock will be based on initial capital costs, or on performance, standardization, life cycle costs, and other factors, or on a competitive procurement process.

I. To comply with the requirements of 49 U.S.C. Section 5323(m) and FTA regulations, "Pre- Award and Post-Delivery Audits of Rolling Stock Purchases, " 49 CFR Part 663, and any revision thereto.

J. To award a third-party contract using a competitive procurement process in compliance with the requirements of 49 U.S.C. Section 5325.

K. To comply with the requirements of 49 U.S.C. Section 5318(e) and FTA regulations, "Bus Testing", 49 CFR Part 665, including the certification that before expending any Federal assistance to acquire the first bus of any new bus model or any bus model with a new major change in configuration or components or before authorizing final acceptance of that bus, that model of bus will have been tested at the ALTOONA Bus Research and Testing Center. The CONTRACTOR must obtain the final testing report and provide a copy of the report to the STATE.

L. To require each bidder to certify that it has complied with 49 CFR 26, which requires each transit vehicle manufacturer to establish annual goals for the participation of disadvantaged business enterprise and to submit those goals to FTA for approval.

M. To comply with 49 U.S.C. Section 5323(j), FTA's Buy America regulations at 49 CFR Part 661 and any amendments thereto, and any implementing guidance issued by FTA, with respect to each third-party contract.

N. To meet applicable regulations of 49 CFR Part 663 in the purchase of revenue rolling stock.

EXHIBIT C

O. In subcontracts exceeding $100,000, to comply with all applicable standards, orders, or regulations issued pursuant to the Clean Air Act, as amended, 42 U.S.C. Section 7401 et. seq. and Clean Water Act, as amended, 33 U.S.C. Section 1251 et. seq. Agrees to report and require each third-party contractor or subcontractor at any tier to report any violation of these requirements resulting from any PROJECT implementation activity of a third-party contractor, subcontractor, or itself to FTA and the appropriate U.S. EPA Regional Office.

P. To comply with U.S. Environmental Protection Agency (U.S. EPA), "Comprehensive Procurement Guideline for Products Containing Recovered Materials," 40 C.F.R. Part 247, which implements section 6002 of the Resource Conservation and Recovery Act, as amended, 42 U.S.C. § 6962. Accordingly, the CONTRACTOR agrees to provide a competitive preference for products and services that conserve natural resources, protect the environment, and are energy efficient, except to the extent that the Federal Government determines otherwise in writing.

Q. To comply with mandatory standards and policies relating to energy efficiency, which are contained in the state energy conservation, plan issued in compliance with the Energy Policy and Conservation Act.

R. To the extent applicable, agrees to conform to the National Intelligent Transportation Systems (ITS) Architecture and Standards as required by SAFETEA-LU § 5307(c), 23 U.S.C. § 512 note, and follow the provisions of FTA Notice, "FTA National ITS Architecture Policy on Transit PROJECTs," 66 *Fed. Reg.* 1455 *et seq*., January 8, 2001, and any other implementing directives FTA may issue at a later date, except to the extent FTA determines otherwise in writing.

S. In accordance with 40 CFR Part 85, "Control of Air Pollution from Mobile Sources," 40 CFR Part 86, "Control of Air Pollution from New and In-Use Motor Vehicles and New and In-Use Motor Vehicle Engines," and 40 CFR Part 600, "Fuel Economy of Motor Vehicles, the CONTRACTOR must include provisions in all third-party contract for procurement of rolling stock to ensure compliance with applicable Federal air pollution control and fuel economy regulations.

T. CONTRACTOR shall refer to FTA "Best Practices Procurement Manual" for additional procurement guidance on procurement processes and any omissions applicable to the PROJECT. The CONTRACTOR'S failure to comply with all mandates shall constitute a material breach of this Agreement.

U. CONTRACTOR must comply with applicable cost principles circulars, current in Title 2 of the Code of Federal Regulations, in determining whether project costs are allowable or unallowable. Title 2 CFR Part 225, previously OMB Circular A-87, establishes principles and standards for determining costs applicable to grants, contracts, and other agreements with State and local governments and federally recognized Indian tribal governments. 2 CFR Part 230 previously OMB Circular A-122, establishes cost principles for nonprofits. Where applicable, CONTRACTOR must comply with cost principles of FAR 31.2.

V. CONTRACTOR must have written protest procedures covering the pre-bid/pre-proposal, post proposal, and post award processes, and shall in all instances disclose to all bidders the CONTRACTOR's protest and the STATE's appeal procedures. All CONTRACTOR's protest decisions must be dated and in writing. A protester must exhaust all administrative remedies with the CONTRACTOR before pursuing an appeal with the STATE. Reviews of protests by the STATE will be limited to:

    1. CONTRACTOR's failure to have or follow its own protest procedures, or its failure to review a complaint or protest

EXHIBIT C

2. Violations of the Federal or State law or regulation.

An appeal to the STATE must be received or postmarked ten (10) calendar days (includes mailing time) from the date of the protest decision.

45. Bid Proposal and Contract Award. All bid solicitation documents, proposed vendor selection and request for non-competitive bid must be reviewed and approved by the STATE prior to the award of the contract. No award shall be made without the written approval from the STATE. The CONTRACTOR (or procurement agent acting on its behalf) shall prepare the bid documents, solicit and receive competitive bids or proposals, shall evaluate the bids or proposals received, and shall select the lowest price compliant bid for award.

    A. The CONTRACTOR (or procurement agency acting on its behalf) shall forward to STATE, at least thirty (30) days in advance, a copy of the bid solicitation document proposed contract, and bidders list.

    B. Prior to contract award, the CONTRACTOR (or procurement agency acting on its behalf) shall forward to STATE a list of all bids, proposals, or price quotations received, a copy of the selected bid or proposal, copy of the bids or proposals of all those whose prices are lower than the selected vendor's, an explanation of the basis for selecting the selected vendor and for rejecting lower bids (if any). In the case of a single bid, sole source, or negotiated price contract, this shall include a statement by the CONTRACTOR that the price is fair and reasonable and the basis for that determination (FTA Circular C 4220.1F "Third-party Contracting Guidance").

    C. All third-party contracts, subcontracts and contract modifications funded under the PROJECT shall include essential elements including, but not restricted to, the following: parties, price or rate of compensation, scope of work, contract time line, contract termination and other legal considerations.

    D. CONTRACTOR to perform a cost or price analysis in connection with every procurement action funded under the PROJECT, including contract modifications. Prior to receiving bids or proposals CONTRACTOR must make independent cost estimates to determine price reasonableness.

46. FTA Regulations, Policies, Procedures and Directives. The CONTRACTOR shall at all times comply with all applicable FTA regulations, policies, procedures and directives, including without limitation those listed directly or by reference in the Agreement (Form FTA MA (16) dated October1 , 2009) between the STATE and FTA, as they may be amended or promulgated from time to time during the term of this Agreement. The CONTRACTOR's failure to so comply shall constitute a material breach of this Agreement. In the event any portion, term, condition or provision of this Agreement should be deemed illegal or in conflict with the laws of the State of California or with Federal law or otherwise be unenforceable, the remaining portion, terms, conditions or provisions shall not be affected thereby.

47. Amendments to Federal, State and Local Laws, Regulations and Directives. The terms of the most recent amendment to any Federal, State, or local laws, regulations, FTA directives, and amendments to the grant or cooperative contract that may be subsequently adopted, are applicable to the PROJECT to the maximum extent feasible, unless FTA provides otherwise in writing.

48. Disposition of Equipment. The disposition of all PROJECT equipment shall be made in accordance with the requirements of 49 C.F.R. Part 19, "Uniform Administrative Requirements for Grants and Agreements with Institutions of Higher Education, Hospitals, and Other Non-Profit Organizations" and FTA C 9070.1F (Section 5310) and 49 U.S.C. § 5310. Whenever any PROJECT equipment is withdrawn from the PROJECT for any reason, the CONTRACTOR shall immediately notify the STATE. Should the PROJECT be terminated, all property procured under this Agreement becomes property of the STATE

EXHIBIT C

and may be transferred to other eligible contractors at the sole discretion of the STATE. At the option of the STATE, the CONTRACTOR shall do one of the following:

A. Written Notice of Termination. The STATE may terminate this contract upon finding that the CONTRACTOR is not operating the PROJECT equipment in accordance with the project description in Exhibit A, Scope of Work, or that the CONTRACTOR is otherwise not complying with the terms of this contract. Termination shall be by written notice specifying the reason for termination and giving the CONTRACTOR thirty (30) days to correct the default. The STATE shall be the sole judge as to whether the CONTRACTOR'S corrective measures are adequate. If CONTRACTOR fails to remedy to STATE'S satisfaction the breach or default or any of the terms, covenants, or conditions of this contract the STATE shall have the right to terminate the contract without any further obligation to the CONTRACTOR. Any such termination for default shall not in any way operate to preclude the STATE from also pursuing all available remedies against CONTRACTOR and its sureties for said breach or default. Once a contract has been terminated within the provisions of this section, the STATE reserves the right to seize vehicles or equipment procured under this Agreement.

B. Remit to the STATE the proportional amount of current market value that exceeds $5,000 per unit at the time of disposition, if any, of PROJECT equipment which shall be based on the percentage of the FTA grant funds paid by CONTRACTOR under this Agreement. Fair market value shall be deemed to be the value of the PROJECT equipment as determined by a competent appraisal at the time the equipment is withdrawn from use; and

C. Return the equipment to the STATE in the same condition as when received by the CONTRACTOR, except for reasonable wear and tear resulting from its use. The parties shall thereupon determine the amount of compensation, if any, to be paid by the CONTRACTOR to the STATE in order to avoid any STATE liability to FTA or to others.

49. Property Maintenance and Inspection. While the PROJECT is in the possession or control of the CONTRACTOR, the CONTRACTOR shall operate or maintain the PROJECT in accordance with detailed maintenance and inspection schedules provided by the manufacturer, keeping a written log or record of all repairs and maintenance. STATE and the FTA shall have the right to conduct periodic inspections for the purpose of confirming the existence, condition, and proper maintenance of the PROJECT. No alterations may be made to the PROJECT in its as-received condition without first receiving written approval from STATE.

50. Insurance.

A. While the PROJECT equipment is in the possession or control of the CONTRACTOR, the CONTRACTOR shall maintain adequate insurance protection against liability for damages for personal bodily injuries (including death), property damage, and vehicle damage as conditioned in this section.

B. The minimum limits of liability may be increased by the STATE at any time upon thirty (30) days' notice to the CONTRACTOR.

C. The CONTRACTOR shall place Vehicle Physical Damage, including collision and comprehensive (fire, theft, etc.) insurance for amounts equal to the actual cash value of each vehicle and any other equipment that is part of the PROJECT equipment, with deductibles acceptable to the STATE. This insurance shall include a provision designating the State of California, Department of Transportation as the Loss Payee for all purposes of adjusting, settling, or paying claims for damage to the insured vehicle(s).

D. The STATE, its officers, employees, and agents shall be named as additional insured.

EXHIBIT C

E. The STATE is designated as the Loss Payee for claims of damage to the insured vehicle(s).

F. The STATE will not be responsible for any premiums or assessments on the policy.

G. The CONTRACTOR, and/or third-party subcontractor, shall furnish to the STATE, before delivery of the PROJECT vehicle(s) to the CONTRACTOR, a certificate of insurance issued by a company licensed to write such insurance in California.

H. Prior to the annual insurance policy expiration date, the CONTRACTOR shall furnish to the STATE a new certificate of insurance or other written evidence of insurance satisfactory to the STATE. At any time that such evidence of insurance has not been provided, the STATE shall have the right immediately to take possession of the PROJECT equipment and to enter the property of the CONTRACTOR for this purpose.

I. The CONTRACTOR shall provide the STATE at least thirty (30) days' notice of cancellation or material change of the vehicle insurance policy.

J. Public Agency or For-Profit CONTRACTORS. The following terms apply to all CONTRACTORS who are defined as a Public Agency or For-Profit entity, regardless if they are providing the service as the prime CONTRACTOR or subcontractor:

1. Property Damage: The CONTRACTOR shall place property damage, whether the property of one or more claimants, in an amount not less than one million five hundred thousand dollars ($1,500,000) per occurrence (combined single limit) for property damage liability combined in respect to vehicles with seating capacity of fifteen (15) or less, or five million dollars ($5,000,000) per occurrence for property damage liability combined in respect to vehicles with seating capacity of sixteen (16) or more.

2. Bodily Injury: The CONTRACTOR shall place bodily injury in an amount not less than one million five hundred thousand dollars ($1,500,000) per occurrence (combined single limit) in respect to vehicles with seating capacity of fifteen (15) or less, or five million dollars ($5,000,000) per occurrence for bodily injury in respect to vehicles with seating capacity of sixteen (16) or more.

3. Vehicle Physical Damage: The CONTRACTOR shall place Vehicle Physical Damage, including collision and comprehensive (fire, theft, etc.) insurance for amounts equal to the actual cash value of each vehicle and any other equipment that is part of the PROJECT equipment, with deductibles acceptable to the STATE. This insurance shall include a provision designating the State of California, Department of Transportation as the Loss Payee for all purposes of adjusting, settling, or paying claims for damage to the insured vehicle(s).

K. Non-Profit Agencies: The following terms apply to all CONTRACTORS who are defined as a non-profit agency, regardless if they are providing the service as the prime CONTRACTOR or subcontractor:

1. Property Damage: The CONTRACTOR shall place property damage, whether the property of one or more claimants, in an amount not less than one million dollars ($1,000,000) per occurrence (combined single limit) for property damage liability combined in respect to vehicles with seating capacity of fifteen (15) or less, or one million five hundred thousand dollars ($1,500,000) per occurrence for property damage liability combined in respect to vehicles with seating capacity of sixteen (16) or more.

2. Bodily Injury: The CONTRACTOR shall place bodily injury in an amount not less than one million

EXHIBIT C

dollars ($1,000,000) per occurrence (combined single limit) in respect to vehicles with seating capacity of fifteen (15) or less, or one million five hundred thousand dollars ($1,500,000) per occurrence for bodily injury in respect to vehicles with seating capacity of sixteen (16) or more.

3. Vehicle Physical Damage: The CONTRACTOR shall place Vehicle Physical Damage, including collision and comprehensive (fire, theft, etc.) insurance for amounts equal to the actual cash value of each vehicle and any other equipment that is part of the PROJECT equipment, with deductibles acceptable to the STATE. This insurance shall include a provision designating the State of California, Department of Transportation as the Loss Payee for all purposes of adjusting, settling, or paying claims for damage to the insured vehicle(s).

51. Excise Tax. The State of California is exempt from federal excise taxes, and no payment will be made for any taxes levied on employees' wages. The STATE will pay for any applicable State of California or local sales or use taxes on the services rendered or equipment or parts supplied pursuant to this Agreement. California may pay any applicable sales and use tax imposed by another state.

52. Potential Subcontractors

A. No Relationship Between STATE and Third-Party Contractor. Nothing contained in this Agreement or otherwise, shall create any contractual relation, obligation or liability between the STATE and any third-party contractors, and no third-party agreement shall relieve the CONTRACTOR of his responsibilities and obligations hereunder. The CONTRACTOR agrees to be as fully responsible to the STATE for the acts and omissions of its third-party contractors and of persons either directly or indirectly employed by any of them as it is for the acts and omissions of persons directly employed by the CONTRACTOR. The CONTRACTOR'S obligation to pay its third-party contractors is an independent obligation from the STATE'S obligation to make payments to the CONTRACTOR. As a result, the STATE shall have no obligation to pay or to enforce the payment of any moneys to any third-party contractor.

B. Third-Party Contracts and Subagreements Affected. To the extent applicable, Federal requirements extend to third-party contractors and their contracts at every tier, and to the subcontractors of third-party contractors and their subagreements at every tier. Accordingly, the CONTRACTOR agrees to include, and to require its third-party contractors to include appropriate clauses in each third-party contract and each subagreement financed in whole or in part with financial assistance provided by FTA.

C. No Federal Government Obligations to Third Parties. The CONTRACTOR agrees that, absent of the Federal Government's express written consent, the Federal Government shall not be subject to any obligations or liabilities to any contractor, any third-party contractor, or any other person not a party to the Grant Agreement in connection with the performance of the PROJECT. Notwithstanding any concurrence provided by the Federal Government in or approval of any solicitation, or third-party agreement, the Federal Government continues to have no obligation or liabilities to any party, including the CONTRACTOR or third-party contractor.

D. Obligations on Behalf of the STATE. The CONTRACTOR shall have no authority to contract for or on behalf of, or incur obligations on behalf of the STATE.

E. STATE Approval of All Third-Party Contracts. The STATE shall approve in writing all proposed third-party contract agreements, Memorandums of Understanding (MOU), or similar documents relating to the performance of the Agreement prior to implementation. The CONTRACTOR agrees that it will not enter into any third-party contracts unless the same are approved in writing by the STATE. Any

EXHIBIT C

proposed amendments to such third-party contracts must be approved by the STATE prior to implementation.

53. Narrowband Migration Deadline. The CONTRACTOR must comply with the Federal Communications Commission Public Notice DA09-2589 deadline for private land mobile radio services in the 150-174 MHz and 421-512 MHz bands which will migrate to narrowband (12.5 kHz or narrower) technology effective January 1, 2013.

54. Indemnification Neither STATE nor any officer or employee thereof is responsible for any injury, damage or liability occurring by reason of anything done or omitted to be done by CONTRACTOR and/or its agents under or in connection with any work, authority or jurisdiction conferred upon CONTRACTOR under this Agreement. It is understood and agreed that CONTRACTOR and/or its agents shall fully defend, indemnify and save harmless STATE and all its officers and employees from all claims, suits or actions of every name, kind and description brought forth under, including, but not limited to, tortious, contractual, inverse condemnation or other theories or assertions of liability occurring by reason of anything done or omitted to be done by CONTRACTOR and/or its agents under this Agreement., employees, representatives, and agents.

EXHIBIT C

APPENDIX A

Title VI PROGRAM CHECKLIST

Every three years, on a date determined by the STATE, the CONTRACTOR is required to submit the following information to the STATE as part of their Title VI Program:

- Title VI Notice to the Public, including a list of locations where the notice is posted;
- Title VI Complaint Procedures (i.e., instructions to the public regarding how to file a Title VI discrimination complaint.);
- Title VI Complaint Form;
- List of transit-related Title VI investigations, complaints, and lawsuits;
- Public Participation Plan, including information about outreach methods to engage minority and limited English proficient populations (LEP), as well as a summary of outreach effort made since the last Title VI Program submission;
- Language Assistance Plan for providing language assistance to persons with limited English proficiency (LEP), based on the DOT LEP Guidance;
- A table depicting the membership of non-elected committees and councils, the membership of which is selected by the recipient, broken down by race, and a description of the process the agency uses to encourage the participation of minorities on such committees;
- A Title VI equity analysis if the recipient has constructed a facility, such as a vehicle storage facility, maintenance facility, operation center, etc.;
- A copy of the board meeting minutes, resolution, or other appropriate documentation showing the board of directors or appropriate governing entity or official(s) responsible for policy decisions reviewed and approved the Title VI Program. The approval must occur prior to submission to the STATE.
- Additional information as specified in chapters IV, V, and VI, of the FTA C 4702.1B.

EXHIBIT D

SECTION 5310 - Operating Assistance/Mobility Management

SPECIAL TERMS AND CONDITIONS

1. Agreement Discrepancy. Should there be a discrepancy between the application and/or the State Management Plan and this Agreement, the Agreement shall govern.

2. Private for profit. The CONTRACTOR assures and certifies that private for profit transit operators have been afforded a fair and timely opportunity to participate to the maximum extent feasible in the planning and provision of the proposed transportation services.

3. Complementary Paratransit Service. The CONTRACTOR, providing complementary paratransit service, certifies that they have submitted to the STATE an initial plan for compliance with the complementary paratransit service provision by January 26, 1992, as required by 49 CFR Part 37, and have provided the STATE annual updates to its plan each year, as required by 49 CFR Part 37, Section 139[j].

4. Civil Rights Reporting Requirements. Upon request by the STATE, the CONTRACTOR must submit the following reports:

   A. DBE Awards/Commitment Form and Actual Payment Form.
   B. Title VI Program Update – Due every 3 years.

5. Bi-Annual and Annual Reporting. The CONTRACTOR shall submit a bi-annual report of its progress on the mobility management PROJECT; and/or an annual report of progress made for Operating Assistance PROJECT within thirty (30) calendar days after the close of each federal reporting period. The federal reporting periods for mobility management PROJECTs are October 1 through March 31 and April 1 through September 30. The federal reporting period for Operating Assistance PROJECTs is October 1 through September 30. Bi-annual Reports are due no later than April 30 for the first half and October 30 for the second half. Annual reports are due no later than October 30. The report shall contain information requested by the STATE to indicate the extent to which the CONTRACTOR is carrying out the PROJECT in accordance with the terms of this contract. Failure to meet these requirements shall be considered grounds for PROJECT Termination as described in Exhibit C of this agreement.

6. Disadvantaged Business Enterprise Reporting – CONTRACTOR shall report their DBE participation in their Other Equipment procurement opportunities using the STATE'S DBE Award/Commitments bi-annually and Actual Payments forms to be provided by the STATE at the time of submittal of the final request for reimbursement. Additional DBE requirements are provided at Exhibit C.

7. Final Reporting. The CONTRACTOR shall submit a final project report documenting how program performance measures have been met by this project for the target group as referenced in the CONTRACTOR'S application.

8. Drug and Alcohol Testing The CONTRACTOR and/or Subcontractor understand that they are not subject to FTA's Drug and Alcohol testing rules, but must comply with the Federal Motor Carrier Safety Administration (FMCSA) rule for employees who hold Commercial Driver's Licenses (CDLs)(49 CFR part 382).

9. The CONTRACTOR agrees to the comply with applicable transit employee protective requirements as follows:

   A. Transit Employee Protective Requirements for PROJECTs Authorized by 49 U.S.C. § 5316 or 5317 in Nonurbanized Areas - If the contract involves transit operations financed in whole or in part with Federal assistance authorized by 49 U.S.C. § 5316 or 5317, the CONTRACTOR agrees to comply with the terms and conditions of the Special Warranty for the Nonurbanized Area Program

EXHIBIT D

agreed to by the U.S. Secretaries of Transportation and Labor, dated May 31, 1979, and the procedures implemented by U.S. DOL or any revision thereto.

B. The CONTRACTOR also agrees to include that any applicable requirements in each subcontract involving transit operations financed in whole or in part with Federal assistance provided by FTA.

10. Purchase Order. Upon approval by the STATE of a procurement award, the CONTRACTOR (or procurement agent acting on its behalf) may issue a purchase order for the PROJECT equipment. Each purchase order shall:

    A. Be consistent with the approved bid award;
    B. Designate that the CONTRACTOR is to be the sole registered owner of any vehicle(s) acquired;
    C. Include a reference to the STATE's contract number assigned this Agreement.

11. Liability Insurance. In addition to Exhibit C, Section 52, under Insurance, the following provisions will also apply:

    A. The CONTRACTOR is responsible for any deductible or self-insured retention contained within the insurance program.
    B. Coverage must be in force for the complete term of this Agreement. If insurance expires during the term of the Agreement, a new certificate must be received by the STATE at least ten (10) days after the expiration of this insurance. This new insurance must still meet the terms of this Agreement.
    C. In the event CONTRACTOR fails to keep in effect at all times the specified insurance coverage, the STATE may, in addition to any other remedies it may have, terminate this Agreement upon the occurrence of such event, subject to the provisions of the Agreement.
    D. Any insurance required to be carried shall be primary, and not excess, to any other insurance carried by the STATE.
        1. Commercial General Liability
            a. The limits of liability shall be at least:
                i. $2,000,000 for each occurrence (combined single limit for bodily injury and property damage).
                ii. $2,000,000 aggregate for products-completed operations
                iii. $4,000,000 general aggregate. This general aggregate limit shall apply separately to the CONTRACTOR's work under this Agreement.
                iv. $15,000,000 umbrella or excess liability. For projects over $25,000,000 only, an additional $10,000,000 umbrella or excess liability (for a total of $25,000,000). Umbrella or excess policy shall include products liability completed operations coverage and may be subject to $15,000,000 or $25,000,000 aggregate limits. Further, the umbrella or excess policy shall contain a clause stating that it takes effect (drops down) in the event the primary limits are impaired or exhausted.
            b. The STATE, including their officers, directors, agents, and employees, shall be named as additional insured under the Commercial General Liability policy with respect to liability arising out of or connected with work or operations performed by or on behalf of CONTRACTOR under this Agreement.
            c. The policy shall stipulate that the insurance afforded the additional insured shall apply as primary insurance. Any other insurance or self-insurance maintained by the STATE will be excess only and shall not be called upon to contribute with this insurance.

12. Loss or Damage to PROJECT Equipment. The CONTRACTOR shall notify the STATE within ten (10) working days of any loss or damage to PROJECT equipment, including, but not limited to loss by accident, fire, vandalism, or theft.

COUNCIL COMMUNICATION

CC #: 8293
File #: 0707

Title: Mike Shellito Indoor Pool Splash Pad Phase 1 Project - Notice of Completion
Contact: Rjahja Canlas 916-772-7529 rcanlas@roseville.ca.us

Meeting Date: 3/1/2017
Item #: 6.7.

RECOMMENDATION TO COUNCIL

Accept the Mike Shellito Indoor Pool Splash Pad Phase 1 Project as complete and adopt a resolution authorizing the City Manager to delegate execution of the attached Notice of Completion to the Parks, Recreation & Libraries Director.

BACKGROUND

The Parks, Recreation & Libraries Department has made a final inspection of the Mike Shellito Indoor Pool Splash Pad Phase 1 Project and has found that all contract work has been completed in accordance with the improvement plans and specifications. The project is now ready for acceptance.

The scope of work included the construction of an outdoor recirculating water play area located within the existing fenced area of the Mike Shellito Indoor Pool and installation of the mechanical equipment (e.g. surge tank, filters, controllers, pumps, etc.).

In accordance with the specifications, the Contractor shall guarantee the installation of these improvements for a period of twelve (12) months from the date of this Notice of Completion.

FISCAL IMPACT

Funding for the project was approved in the FY2012/13 budget through the general city-wide park fund.

ECONOMIC DEVELOPMENT / JOBS CREATED

Based on Federal guidelines, there is one job created for every $92,000.00 in direct government spending. Based on that figure, three new jobs were created as a result of this project.

ENVIRONMENTAL REVIEW

Project level CEQA compliance for the Mike Shellito Indoor Pool Splash Pad Phase 1 project was accomplished with preparation of the Central Park Master Plan and Aquatic Center Initial Study/Mitigated Negative Declaration (adopted June 21, 2006). Because the Mike Shellito Indoor Pool Splash Pad Phase 1 project is consistent with the project evaluated in the 2006 Initial Study, no new effects would be expected to occur and all applicable mitigation measures from the Initial Study will be implemented. As such, no additional CEQA action is required at this time.

Respectfully Submitted,

Rjahja Canlas, Park Development Analyst

Dion Louthan, Parks, Recreation & Libraries Director

_____

Rob Jensen, City Manager

ATTACHMENTS:

Description

Resolution No. 17-78

MSIP Splashpad - Notice of Completion

RESOLUTION NO. 17-78

ACCEPTING THE PUBLIC WORK KNOWN AS THE MIKE SHELLITO INDOOR POOL SPLASH PAD PHASE 1 PROJECT, APPROVING THE "NOTICE OF COMPLETION", AND AUTHORIZING THE PARKS, RECREATION AND LIBRARIES DIRECTOR TO EXECUTE SAID NOTICE ON BEHALF OF THE CITY OF ROSEVILLE

BE IT RESOLVED by the City Council of the City of Roseville as follows:

1. The "Notice of Completion" on file in the City Clerk's Department relative to that public work known as the Mike Shellito Indoor Pool Splash Pad Phase 1 Project has been approved and the public work accepted.

2. The Parks, Recreation and Libraries Director is hereby authorized and directed to execute said Notice on behalf of the City of Roseville.

PASSED AND ADOPTED by the Council of the City of Roseville this ____ day of _____, 20___, by the following vote on roll call:

AYES COUNCILMEMBERS:

NOES COUNCILMEMBERS:

ABSENT COUNCILMEMBERS:

_____
MAYOR

ATTEST:

_____
City Clerk

AFTER RECORDING RETURN TO:
CITY CLERK
311 VERNON STREET
ROSEVILLE, CA 95678

NOTICE OF COMPLETION

NOTICE IS HEREBY GIVEN that the public work known as the Mike Shellito Indoor Pool Splash Pad Phase 1 Project, was completed and accepted by the City of Roseville on _____. The location is indicated on the attached map, marked as Exhibit "A" and incorporated herein by this reference.

The general contractor on said project was Sierra Valley Construction, Inc.

The surety on said project was Travelers Casualty and Surety Company of America

_____
DION LOUTHAN
Parks, Recreation, & Libraries Director
City of Roseville

ATTEST:

_____
SONIA OROZCO
City Clerk

I, Dion Louthan, being first duly sworn, depose and say: I am the Director of Parks, Recreation & Libraries of the City of Roseville, a municipal corporation in the State of California, owner of the property described in the above Notice. I am duly authorized to make this verification for and on behalf of the City of Roseville. I have read the Notice of Completion and know its contents and the facts stated therein are true.

A notary public or other officer completing this certificate verifies only the identity of the individual who signed the document to which this certificate is attached, and not the truthfulness, accuracy, or validity of that document.

_____
DION LOUTHAN
Parks, Recreation & Libraries Director
City of Roseville

State of California
County of Placer

Subscribed and sworn to (or affirmed) before me on this _____ day of _____, 20_____, by _____ proved to me on the basis of satisfactory evidence to be the person(s) who appeared before me.

_____
Notary Public in and for said County and State

Exhibit A

MIKE SHELLITO INDOOR POOL
SPLASH PAD PHASE 1 PROJECT

The scope of work included the construction of an outdoor recirculating water play area located within the existing fenced area of the Mike Shellito Indoor Pool and installation of the mechanical equipment (e.g. surge tank, filters, controllers, pumps, etc.).

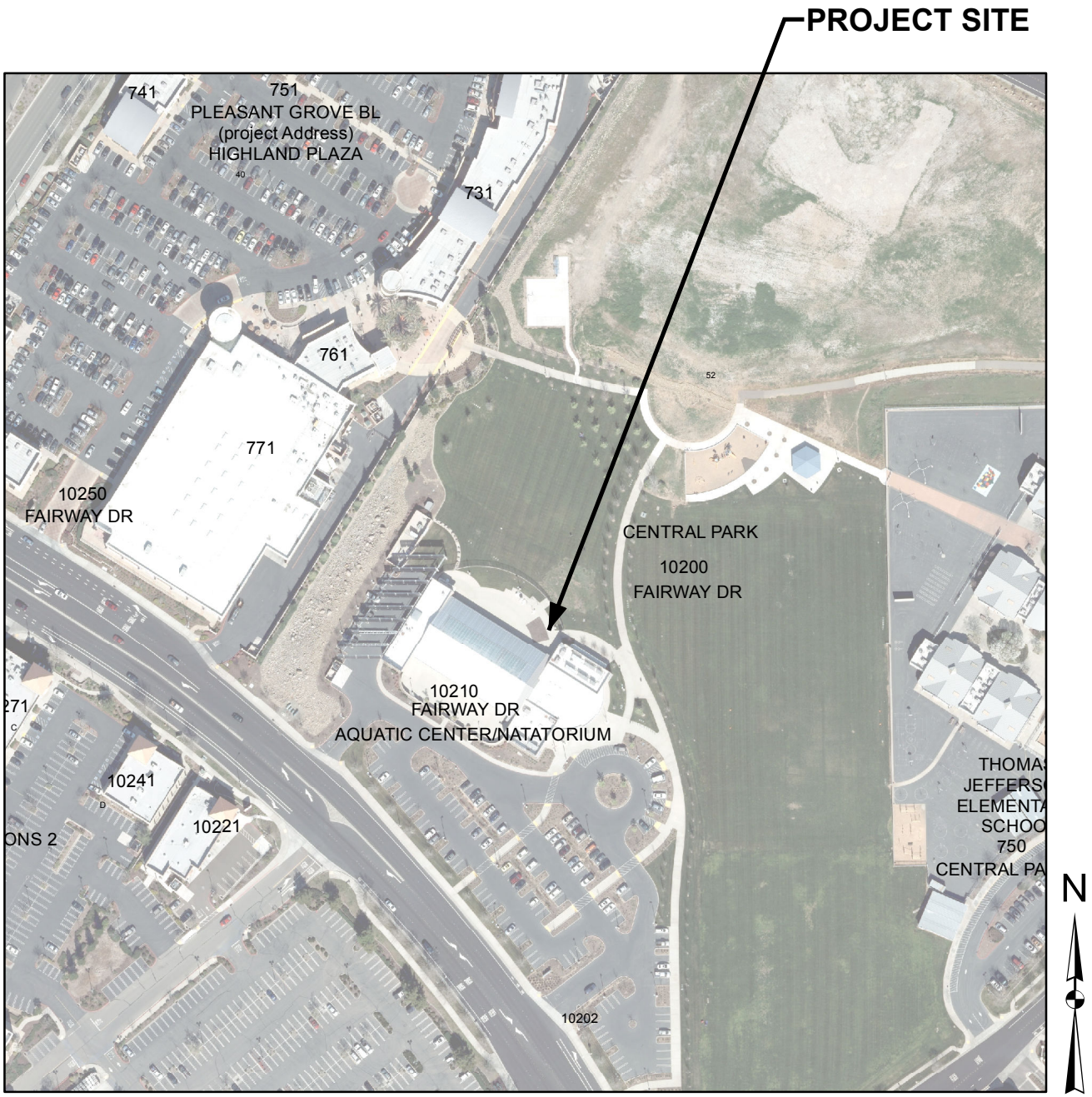

COUNCIL COMMUNICATION

CC #: 8291
File #: 0709 & 0201-01

Title: HOUSING AUTHORITY - Software Upgrade Budget Adjustment
Contact: Melissa Hagan 916-774-5476 mhagan@roseville.ca.us

Meeting Date: 3/1/2017
Item #: 6.8.

RECOMMENDATION TO COUNCIL

Staff recommends the City Council, acting as the Housing Authority Board, approve a budget adjustment of Housing Authority Adminstrative Reserve funds in the amount of $8,139, in order to fund an upgrade to the Housing Authority's Housing Pro software program.

BACKGROUND

HAPPY Software, Inc. develops and provides housing software and services to housing agencies administering the Housing and Urban Development Housing Choice Voucher program (HCV). The City of Roseville Housing Authority has been using the software since 1999 to manage all aspects of its HCV program. During the last sixteen years, the program has been upgraded several times which provides enhancements and software performance improvements. The Housing Authority will need to upgrade the current version being used from Housing Pro 8 to Housing Pro 9.1 not only to take advantage of the most recent enhancements, but also to make it compatible with the new Windows 10 operating system that will soon be installed. The Housing Division's computers are scheduled for their regular city replacement over the next couple of months. The computer replacement process will include installation of Windows 10 as the current city operating system, requiring this upgrade in Housing Pro. This upgrade has been approved by the IT department under their administrative review process.

FISCAL IMPACT

Expenditures of the Housing Authority Administrative Reserve Funds are separate and are not dependent upon the General Fund. This item will use Housing Authority funds and has no impact on the General Fund.

ECONOMIC DEVELOPMENT / JOBS CREATED

The budget adjustment for the Housing Authority will not create any new jobs.

ENVIRONMENTAL REVIEW

The California Environmental Quality Act (CEQA) does not apply to activities that will not result in a direct or reasonably foreseeable indirect physical change in the environment (CEQA Guidelines §15061(b)(3)). The budget adjustment for the Housing Authority Fund does not include the potential for a significant environmental effect, and therefore is not subject to CEQA.

Respectfully Submitted,

Melissa Hagan, Administrative Analyst

Chris Robles, Economic Development Director

_____

Rob Jensen, City Manager

ATTACHMENTS:

Description

Housing Resolution 2-17

Budget Adjustment

HOUSING AUTHORITY OF THE CITY OF ROSEVILLE

RESOLUTION NO. 2-17

APPROVING A BUDGET ADJUSTMENT FOR
FISCAL YEAR 2016-2017

WHEREAS, the Housing Authority of the City of Roseville has reviewed the proposed Housing Authority Budget Adjustment, for the transfer of $8,139.00 in Administrative Reserve funds to upgrade the Housing Authority's Housing Pro software program.

NOW, THEREFORE, the Housing Authority of the City of Roseville does hereby approve the Housing Authority Budget Adjustment of $8,139.00.

PASSED AND ADOPTED by the Housing Authority of the City of Roseville this _____ day of _____, 20___, by the following vote on roll call:

AYES AUTHORITY MEMBERS:

NOES AUTHORITY MEMBERS:

ABSENT AUTHORITY MEMBERS:

_____
CHAIR

_____
Secretary

EXHIBIT “A”

CITY OF ROSEVILLE CALIFORNIA

REQUEST FOR BUDGET ADJUSTMENT
FINANCE DEPARTMENT

Instructions: Complete all necessary fields. Fields marked with an asterisk (*) are mandatory and required for processing. Obtain required approvals and process according to the procedure outlined in: A.R. 6.01 Budget Adjustment Policy & Procedure.

For more detailed budget adjustment training information, including examples, please click on the following link: Miscellaneous Budget Training Information.

REQUESTER*: Melissa Hagan (x 5475)

DEPARTMENT/DIVISION*: Economic Development/Housing

FISCAL YEAR/EFFECTIVE DATE*: FY2017

PROPOSED COUNCIL DATE (if applicable): 03/01/2017

USE OF FUNDS*

AMOUNT*	ACCOUNT NUMBER GL ORG KEY*	GL OBJECT*	FUND*	JL PROJECT	JL ACTIVITY	Account Title/Activity Description*
8,139	08120	5210	285			HOUSING AUTHORITY SOFTWARE
$ 8,139	TOTAL					

SOURCE OF FUNDS*

AMOUNT*	ACCOUNT NUMBER GL ORG KEY	GL OBJECT	FUND*	JL PROJECT	JL ACTIVITY	Account Title/Activity Description*
8,139	00285		285			Fund Balance
$ 8,139	TOTAL					

FINANCE USE Approved:

Nancy Rothlisberger 2/17/17 — BUDGET MANAGER/DESIGNEE — DATE

Valen Dell 2/17/17 — Finance Director: — Date

Justification for Budget Adjustment*:

To fund an upgrade to Housing Pro from 8 to 9 using Adminstrative Reserve funds in the amount of $8,139.

Approved: 2/16/17 — REQUESTING DEPARTMENT HEAD / DESIGNEE — DATE

Approved: — CITY MANAGER — DATE

Revised 6/2016

COUNCIL COMMUNICATION

CC #: 8289
File #: 0316-04

Title: 2017 Speed Limit Ordinance Update
Contact: Jerome Pastor 916-746-1352 jpastor@roseville.ca.us

Meeting Date: 3/1/2017
Item #: 6.9.

RECOMMENDATION TO COUNCIL

Recommend Council approve the attached speed limit ordinance update.

BACKGROUND

State law establishes the process for setting speed limits for roadways in California. The California Vehicle Code (CVC) and the California Manual on Uniform Traffic Control Devices (CaMUTCD) contain the guidelines and processes that must be followed in order to make speed limits radar enforceable. Certain roadways are assigned speed limits by default (called “prima facie” speed limits), such as 25 mph for residential streets and business districts, 15 mph in alleys, 55 mph on two-lane undivided highways, and 65 mph on all other roadways. To justify a RADAR enforceable posted speed limit below prima facie, local jurisdictions are required to conduct and approve an Engineering and Traffic Survey (ETS). An ETS is based on two factors; the measured 85th percentile speed (that speed at which 85% of the traffic is traveling at or below) and whether or not “conditions not readily apparent to motorists” are present.

The California Department of Transportation (Caltrans) has an established set of standards and procedures for conducting an ETS. These standards require that for a speed limit to be radar enforceable, the posted speed limit should be set at the first 5 mph increment nearest the 85th percentile speed. The recommended speed limit can be lowered an additional 5 mph if “conditions not readily apparent to motorists” are present. Conditions not readily apparent can be a variety of things such as an accident history, numerous driveways along the roadway, adjacent land uses, bike lanes, etc. The CVC requires that speed surveys must be conducted every five to ten years, or when there is a major change to a roadway.

Staff recently completed 23 ETS’s (see attached Table 1). There is one proposed increase, two decreases, five new roadways surveyed for the first time, and 15 resurveys with no change recommended.

The one proposed increased speed limit is on Roseville Road from Cirby Way to the southern city limits. This section of road was recently reconstructed to smooth out the "S-curve". The improvements also included a striped median to separate opposing lanes of traffic, bike lanes,

and sidewalk, curb, and gutter. When improvements such as these are made in the roadway, it can be expected that drivers experience an increase in comfort and confidence which translates to an increase in 85th percentile speeds. The proposed 45 mph speed limit, based upon the recent ETS, is a slight increase from the existing 40 mph speed limit, and will make it consistent with the existing 45 mph posting along Foothills Boulevard north of Cirby Way.
A copy of the complete set of speed surveys is available at the Clerk's Office for review. The CVC requires that posted speed limits be consistent with the results of the ETS to be radar enforceable. Public Works, Police, and the City Attorney are all in agreement that in order for the City to be in compliance with State law, posted speed limits need to be set using the State guidelines.

FISCAL IMPACT

The cost of changing speed limit signage is included in the existing Street Maintenance General Fund operating budget.

ECONOMIC DEVELOPMENT / JOBS CREATED

Not applicable.

ENVIRONMENTAL REVIEW

The California Environmental Quality Act (CEQA) does not apply to activities that will not result in a direct or reasonably foreseeable indirect physical change in the environment (CEQA Guidelines §15061(b)(3)). The Speed Limit Ordinance Update does not include the potential for a significant environmental effect, and therefore is not subject to CEQA.

Respectfully Submitted,

Jerome Pastor, Assistant Engineer

Rhon Herndon, Public Works Director

_____
Rob Jensen, City Manager

ATTACHMENTS:

Description

Table 1 - Speed Limit Changes

ordinance

TABLE 1

Street	From	To	Existing Speed Limit	Current 85th	Previous 85th	Proposed Speed Limit
Proposed Increases						
Roseville Road	Cirby Way	City Limit	40	50	45.3	45
Proposed Decreases						
Industrial Ave	Washington Blvd	Northern City Limits	50	51.3	55.6	45
Opportunity Drive	Vineyard Road	End	35	35.5	33.5	30
New Surveys						
All-America City Blvd	Los Vegas Ave	Washington Blvd	N/A	28.5	N/A	25
Cirby Hills Drive	Cirby Way	End	N/A	29.5	N/A	30
Fidelity Way	Blue Oaks Blvd	Freedom Way	N/A	29.0	N/A	30
Freedom Way	Industrial Ave	Washington Blvd	N/A	41.5	N/A	40
Miners Ravine Dr	Sierra College Blvd	Copperleaf Street	N/A	32.5	N/A	30
No Change						
Antelope Creek Drive	Galleria Blvd	Creekside Ridge Drive	30	36.4	36.1	30
Atkinson Street	Church Street	Foothills Blvd	40	46.2	45.4	40
Baseline Road	Fiddyment Road	Woodcreek Oaks Blvd	45	50.9	52.3	45
Baseline Road	Woodcreek Oaks Blvd	Foothills Blvd	45	51.5	51.1	45
Cirby Way	Foothills Blvd	Riverside Ave	40	45.3	45.0	40
Cirby Way	Riverside Ave	Sunrise Ave	40	45.1	44.7	40
Cirby Way	Rocky Ridge Drive	Sunrise Ave	40	43.7	44.9	40
Commerce Drive	Vernon Street	Roseville Road	35	32.0	33.5	35
Fiddyment Road	Pleasant Grove Blvd	Blue Oaks Blvd	45	52.0	52.4	45
Fairway Drive	Pleasant Grove Blvd	Northern City Limit	40	46.0	43.9	40
Kenroy Lane	Riverside Ave	End	25	31.7	27.0	25
Niblick Drive	Blue Oaks Blvd	End	35	37.5	35.6	35
Roseville Pkwy	Pleasant Grove Blvd	Galleria Blvd	45	48.3	50.1	45
Woodcreek Oaks Blvd	Baseline Road	Junction Blvd	40	46.9	46.9	40
Yosemite Street	Atlantic Street	Shasta Street	25	31.6	32.1	25

ORDINANCE NO. ____

ORDINANCE OF THE COUNCIL OF THE CITY OF ROSEVILLE AMENDING SECTION 11.28.010 OF CHAPTER 11.28 OF TITLE 11 OF THE ROSEVILLE MUNICIPAL CODE REGARDING SPEED LIMITS

THE CITY OF ROSEVILLE ORDAINS:

SECTION 1. Section 11.28.010 of Chapter 11.28 of Title 11 of the Roseville Municipal Code is hereby amended to read as follows:

11.28.010 Change in speed limits set by state law.

Pursuant to authority contained in Sections 22357 and 22358 of the Vehicle Code, the city council determines upon the basis of an engineering and traffic survey that the prima facie speed limits set forth in this section would facilitate the orderly movement of vehicular traffic and would be reasonable and safe, except when passing school grounds, and it is determined that a speed limit greater than those hereinafter set forth would be more than is reasonable or safe. It is declared that the prima facie speed limits hereinafter set forth are established according to law:

1. Alexandra Drive:
    a. Between East Roseville Parkway and Secret Ravine Parkway, 40 mph;

2. All-America City Boulevard:
    a. Between Los Vegas Avenue and Washington Boulevard, 25 mph;

32. Angus Road:
    a. Between Fiddyment Road and Casa Sedona Drive, 35 mph;

43. Antelope Creek Drive:
    a. Between Galleria Boulevard and Creekside Ridge Drive, 30 mph,
    b. Between Creekside Ridge Drive and end, 35 mph;

54. Atkinson Street:

a. Between Foothills Boulevard and Church Street, 40 mph,

b. Between Foothills Boulevard and PFE, 45 mph;

6~~5~~. Atlantic Street:

a. Between Yosemite Street and Interstate 80, 40 mph;

7~~6~~. Auburn Boulevard:

a. Between Riverside and city limits, 35 mph;

8~~7~~. Automall Drive: 30 mph;

9~~8~~. Baseline Road:

a. Between Foothills Boulevard and Fiddyment Road, 45 mph;

10~~9~~. Berry Street:

a. Between 156 Berry Street and Galleria Boulevard, 35 mph;

11~~0~~. Blue Oaks Boulevard:

a. Between Fiddyment Road and eastern city limits, 45 mph,

b. Between Fiddyment Road and Hayden Parkway, 50 mph;

12~~1~~. Bob Doyle Drive:

a. Between Kennerleigh Parkway and Hayden Parkway, 35 mph;

13~~2~~. Brady Lane:

a. Between Vineyard Road and Baseline Road, 40 mph;

14~~3~~. Casa Sedona Drive:

a. Between Angus Road and Crocker Ranch Road, 30 mph;

15~~4~~. Central Park Drive:

a. Between Fairway Drive and Highland Park Drive, 25 mph;

16~~5~~. Chase Drive:

a. Between Roseville Parkway and Heritage Drive, 30 mph;

17~~6~~. Church Street:

a. Between Atkinson Street and Washington Boulevard, 35 mph;

18. Cirby Hills Drive:

a. Between Cirby Way and end, 30 mph;

19~~7~~. Cirby Way:

a. Between Foothills Boulevard and Old Auburn Boulevard, 40 mph;

20~~18~~. Commerce Drive:

a. Vernon Street and Roseville Road, 35 mph;

21~~19~~. Country Club Drive:

a. Between Baseline Road and Pleasant Grove Boulevard, 35 mph;

22~~0~~. Creekside Ridge Drive:

a. Between Roseville Parkway and end, 25 mph;

23~~1~~. Crocker Ranch Road:

a. Between Blue Oaks Boulevard and Opal Drive, 35 mph;

24~~2~~. Del Webb Boulevard:

a. Between Fiddyment Road and Blue Oaks Boulevard, 35 mph;

25~~3~~. Diamond Creek Boulevard:

a. Between Blue Oaks Boulevard and Parkside Way, 35 mph;

26~~4~~. Douglas Boulevard:

a. Between Vernon Street and I-80, 30 mph,

b. Between I-80 and Rocky Ridge, 35 mph,

c. Between Rocky Ridge Drive and Sierra College Boulevard, 45 mph;

27~~5~~. Eastridge Drive:

a. Between Old Auburn Road and Weston Way, 30 mph;

28~~6~~. East Roseville Parkway:

a. Between Taylor Road and Sierra College Boulevard, 45 mph,

b. Between Sierra College Boulevard and eastern City limits, 40 mph;

29~~7~~. Estates Drive:

a. Between Folsom Road and Harding Boulevard, 25 mph;

30~~28~~. Eureka Road:

a. Between Interstate 80 and Sierra College Boulevard, 40 mph;

3129. Fairway Drive:

a. Between ~~Blue Oaks Boulevard~~northern city limits and Stanford Ranch Road, 40 mph;

320. Fiddyment Road:

a. Between Pleasant Grove Boulevard and northern city limits, 45 mph,

b. Between Pleasant Grove Boulevard and Baseline Road, 50 mph;

33. Fidelity Way:

a. Between Blue Oaks Boulevard and Freedom Way, 30 mph;

341. Folsom Road:

a. Between Vernon Street and Douglas Boulevard, 25 mph;

352. Foothills Boulevard:

a. Between Cirby Way and Blue Oaks Boulevard, 45 mph,

b. Between Blue Oaks Boulevard and northern city limits, 40 mph;

36. Freedom Way:

a. Between Industrial Avenue and Washington Boulevard, 40 mph;

373. Galilee Road:

a. Between Pleasant Grove Boulevard and Industrial Avenue, 35 mph;

384. Galleria Boulevard:

a. Between Harding Boulevard and Roseville Parkway, 45 mph,

b. Between Roseville Parkway and SR-65, 40 mph;

395. Gibson Drive:

a. Between Roseville Parkway (E) and Roseville Parkway (W), 40 mph;

4036. Hallissy Drive:

a. Between Washington Boulevard and Pleasant Grove Boulevard, 30 mph;

4137. Harding Boulevard:

a. Between Douglas Boulevard and Estates Drive, 30 mph,

b. Between Estates Drive and Lead Hill Boulevard, 35 mph,

c. Between Lead Hill Boulevard and Wills Road, 40 mph;

4238. Hayden Parkway:

a. Between Fiddyment Road and Blue Oaks Boulevard, 35 mph;

4339. Highland Park Drive:

a. Between Fairway Drive and Pleasant Grove Boulevard, 30 mph,

b. Between Pleasant Grove Boulevard and Stanford Ranch, 35 mph;

440. Hillsborough Drive:

a. Between East Roseville Parkway and Eureka Road, 35 mph;

451. Industrial Avenue:

a. Between Northern city limits and Washington Boulevard, 4550 mph;

462. Junction Boulevard:

a. Between Baseline Road and Foothills Boulevard, 45 mph,

b. Between Foothills Boulevard and Washington Boulevard, 40 mph;

473. Kennerleigh Parkway:

a. Between Pleasant Grove Boulevard and Bob Doyle Drive, 35 mph;

484. Kenroy Lane:

a. Between Riverside Avenue and end, 25 mph;

495. Lead Hill Boulevard:

a. Between Harding Boulevard and North Sunrise Avenue, 35 mph,

b. Between North Sunrise Avenue and East Roseville Parkway, 40 mph;

5046. Main Street:

a. Between Foothills Boulevard and Porter Drive, 35 mph;

5147. Market Street:

a. Between Pleasant Grove Boulevard and westerly end, 35 mph;

5248. McAnally Drive:

a. Between Foothills Boulevard and Woodcreek Oaks Boulevard, 35 mph;

5349. Melody Lane:

a. Between Cirby Way and West Whyte Avenue, 35 mph;

54. Miners Ravine Drive:

a. Between Sierra College Boulevard and Copperleaf Street, 30 mph;

55~~0~~. Monument Drive:

a. Between Pleasant Grove Boulevard and Bob Doyle Drive, 30 mph;

56~~1~~. New Meadow Drive:

a. Between Blue Oaks Boulevard and Parkside Way, 35 mph;

57~~2~~. Niblick Drive:

a. Between Blue Oak Boulevard and end, 35 mph;

58~~3~~. North Cirby Way:

a. Between Thistle Down Drive and East Roseville Parkway, 35 mph;

59~~4~~. Northpark Drive:

a. Between Woodcreek Oaks Boulevard and Parkside Drive, 35 mph;

60~~55~~. North Sunrise Avenue:

a. Between Douglas Boulevard and Lead Hill Boulevard, 35 mph,

b. Between Lead Hill Boulevard and East Roseville Parkway, 40 mph;

61~~56~~. Oak Crest Drive:

a. Between Alexandra Drive and Frensham Drive, 25 mph;

62~~57~~. Old Auburn Road:

a. Between South Cirby and the easterly city limit line, 45 mph,

b. Between Sierra College Boulevard and East Roseville Parkway, 35 mph,

c. Between South Cirby and the southern city limit line, 35 mph;

63~~58~~. Olympus Drive:

a. Between Professional Drive and East Roseville Parkway, 30 mph,

b. Between East Roseville Parkway and Sierra College Boulevard, 40 mph;

64~~59~~. Opal Drive:

a. Between Crocker Ranch Road and Parkside Way, 35 mph;

650. Opportunity Drive:

a. Vineyard Road and end, 305 mph;

661. Orchard View Road:

a. Between Blue Oaks Boulevard and Harcourt Way, 30 mph;

672. Orlando Avenue:

a. Between Cirby Way and Riverside Avenue/Auburn Boulevard, 40 mph;

683. Painted Desert Drive:

a. Between Prairie Woods and Woodcreek Oaks, 30 mph;

694. Parkhill Drive:

a. Between McLaren Drive and East Roseville Parkway, 35 mph;

7065. Parkside Drive:

a. Between Opal Drive and Diamond Creek Boulevard, 35 mph,

b. Between Diamond Creek and McCloud Way, 25 mph,

c. Between McCloud Way and New Meadow Drive; 35 mph;

7166. Park Regency Drive:

a. Between Hiawatha Drive and Junction Boulevard, 30 mph,

b. Between Junction Boulevard and Casterbridge Drive, 35 mph;

7267. P.F.E. Road:

a. Between Atkinson Street and the western city limits, 45 mph;

7368. Phillip Road:

a. Between Westpark Drive and end, 40 mph;

7469. Pioneer Road:

a. Between Pleasant Grove Boulevard and Trehowell Drive, 30 mph;

750. Pleasant Grove Boulevard:

a. Between ~~Market Street~~western city limits and Rocklin city limits, 45 mph;

761. Prairie Woods Way:

a. Between Blue Oaks and Painted Desert, 30 mph;

772. Professional Drive:

a. Between Rocky Ridge Drive and Olympus Drive, 30 mph;

783. Reserve Drive:

a. Between Diamond Oaks Road and Roseville Parkway, 25 mph,

b. Between Diamond Oaks Road and Berry Street, 35 mph;

794. Riverside Avenue:

a. Between I-80 and Darling Way, 35 mph,

b. Between Darling Way and Douglas Boulevard, 25 mph;

8075. Rocky Ridge Drive:

a. Between East Roseville Parkway and Cirby Way, 40 mph;

8176. Roseville Parkway:

a. Between Washington Boulevard and Taylor Road, 45 mph;

8277. Roseville Road:

a. Between Cirby Way and the southern city limits, 450 mph;

8378. Scarborough Drive:

a. Between Secret Ravine Parkway and northern city limits, 40 mph;

8479. Secret Ravine Parkway:

a. Between East Roseville Parkway and Sierra College Boulevard, 45 mph;

8580. Sierra Boulevard:

a. Between Roseville Street and Alta Vista, 30 mph;

861. Sierra College Boulevard:

a. Between Olympus Drive and Old Auburn Road, 45 mph,

b. Between Olympus and city limits, 50 mph;

872. Sierra Gardens Drive:

a. Between Douglas Boulevard and North Sunrise Avenue, 30 mph;

~~b. Between Douglas Boulevard and Adamson Court, 25 mph;~~

883. South Cirby Way:

a. Between Rocky Ridge Drive and Old Auburn Road, 40 mph;

894. Stanford Ranch Road:

a. Between Highway 65 and northern city limits, 40 mph;

9085. Stone Point Drive:

a. Between North Sunrise and Rocky Ridge Drive, 35 mph;

9186. Sun City Boulevard:

a. Between Pleasant Grove Boulevard and Del Webb Boulevard, 35 mph;

9287. Sunrise Avenue:

a. Between Douglas Boulevard and Cirby Way, 35 mph,

b. Between Cirby Way and city limits, 40 mph;

9388. Taylor Road:

a. Between Eureka Road and northern city limits, 45 mph;

9489. Trehowell Drive:

a. Between Chase Drive and Pioneer Road, 30 mph;

950. Trestle Road:

a. Between Roseville Parkway and Hallissy Drive, 25 mph;

961. Vernon Street:

a. Between Folsom Road and Riverside Avenue, 25 mph,

b. Between Riverside Avenue and 6th Street, 35 mph,

c. Between 6th Street and Cirby Way, 40 mph;

972. Village Green Drive:

a. Between Fiddyment Road and Bob Doyle Drive, 35 mph;

983. Vineyard Road:

a. Between Atkinson Street and Brady Lane, 40 mph;

994. Washington Boulevard:

a. Between Oak Street and Elefa Street, 35 mph,

b. Between Elefa Street and Blue Oaks Boulevard, 45 mph;

10095. Westhills Drive:

a. Between Fiddyment Road and Morningstar Drive, 35 mph;

10196. Westpark Drive:

a. Between Phillip Road and Bickleigh Loop, 45 mph,

b. Between Bickleigh Loop and Bob Doyle Drive, 35 mph;

10297. Woodcreek Oaks Boulevard:

a. Between Baseline Road and Horncastle Avenue, 40 mph,

b. Between Horncastle Avenue and northern city limits, 45 mph;

10398. Yosemite Street:

a. Between Atlantic Street and Shasta Street, 25 mph.

SECTION 2. This ordinance shall be effective at the expiration of thirty (30) days from the date of adoption.

SECTION 3. The City Clerk is hereby directed to cause this ordinance to be published in full at least once within fourteen (14) days after it is adopted in a newspaper of general circulation in the City, or shall within fourteen (14) days after its adoption cause this ordinance to be posted in full in at least three (3) public places in the City and enter in the Ordinance Book a certificate stating the time and place of said publication by posting.

PASSED AND ADOPTED by the Council of the City of Roseville this ___ day of _____, 20__, by the following vote on roll call:

AYES COUNCILMEMBERS:

NOES COUNCILMEMBERS:

ABSENT COUNCILMEMBERS

_____

MAYOR

ATTEST:

_____

City Clerk

COUNCIL COMMUNICATION

CC #: 8290
File #: 0203

Title: Cooperative Purchasing - Municipal Code Amendment
Contact: Shannon Wiest 916-774-5705 swiest@roseville.ca.us

Meeting Date: 3/1/2017
Item #: 6.10.

RECOMMENDATION TO COUNCIL

Recommend Council introduce the first reading of revisions to Roseville Municipal Code section 4.12.105 Cooperative Purchasing.

BACKGROUND

Updates were made to Roseville Municipal Code section 4.12.105 Cooperative Purchasing, to reflect the City's current business needs and will increase the number of cooperative agreements the City is able to leverage, ultimately saving the City time and money. These updates include: adding Request for Proposal (RFP) language throughout; extending the piggyback eligibility timeframe for a local agency agreement or cooperative purchasing program from 12 months to 3 years; revising the state and federal government language to include all states; updating the list of examples of agencies who act as lead agencies for master and cooperative agreements; expanding the multiple-award schedule language; clarifying the pricing criteria; and increasing the price variation allowance from 10 percent to 15 percent.

The Purchasing Division worked with the City Attorney's office to incorporate the revisions into the above referenced municipal code.

FISCAL IMPACT

There is no fiscal impact from the proposed ordinance amendment.

ECONOMIC DEVELOPMENT / JOBS CREATED

Not applicable

ENVIRONMENTAL REVIEW

The California Environmental Quality Act (CEQA) does not apply to activities that will not result in a direct or reasonably foreseeable indirect physical change in the environment (CEQA Guidelines §15061(b)(3). Adoption of the municipal code amendments does not include the potential for a significant environmental effect, and therefore is not subject to CEQA.

Respectfully Submitted,

Shannon Wiest, Purchasing and Warehouse Manager

Paul Diefenbach, Central Services Director

_____

Rob Jensen, City Manager

ATTACHMENTS:

Description

4.12.105 RMC changes (redline)

ORDINANCE NO. ____

ORDINANCE OF THE COUNCIL OF THE CITY OF ROSEVILLE AMENDING SECTION 4.12.105 OF CHAPTER 4.12 OF TITLE 4 OF THE ROSEVILLE MUNICIPAL CODE REGARDING COOPERATIVE PURCHASING

THE CITY OF ROSEVILLE ORDAINS:

SECTION 1. Section 4.12.105 of Chapter 4.12 of Title 4 of the Roseville Municipal Code is hereby amended to read as follows:

4.12.105 Cooperative purchasing.

A. Local Agencies. The purchasing officer may purchase services, supplies and equipment without complying with the bidding requirements of this chapter, if such purchases are made under an agreement or cooperative purchasing program entered into by any local governmental jurisdiction or public agency, regardless of whether the city is a named party to the agreement or an actual participant in such a program. However, the provisions of this subsection may be utilized only if: (1) the agreement or cooperative purchasing program was entered into pursuant to a bidding or request for proposal (RFP) process which substantially conforms to the city's competitive bidding or RFP requirements; and (2) the agreement or cooperative purchasing program is still in full force and effect, but was not entered into by the local governmental jurisdiction or public agency more than three (3) years ~~was entered into by the local governmental jurisdiction or public agency not more than 12 months~~ prior to the city's approval of a binding obligation to purchase services, supplies, or equipment.

B. State and Federal Government. The purchasing officer may purchase services, supplies and equipment without complying with the bidding or RFP requirements of ~~this chapter~~the city, if such purchases are based on any master agreement, cooperative agreement, ~~multiple award schedule,~~ or other types of agreements entered into by ~~the state of California~~any state or the United States of America that would offer the city the benefits of those entities' buying power, regardless of whether the city is a named party to such agreements ~~or schedules~~. Examples include, but are not limited to, National Association of State Procurement Officials Value Point (NASPO Value Point) ~~the California Multiple Award Schedules (CMAS), the Western States Contracting Alliance (WSCA)~~or~~,~~ National Intergovernmental Purchasing Alliance (National IPA) ~~and the Federal General Services Administration (GSA)~~ Contracts.

C. Multiple-Award Schedules. The purchasing officer may purchase services, supplies and equipment without complying with the bidding or RFP requirements of the city, if such purchases are based on any multiple-award schedules developed through a competitive process, regardless of whether the city is a named party to such schedules. Examples include, but are not limited to, California Multiple Award Schedules (CMAS) and the Federal General Services Administration (GSA).

When purchasing pursuant to ~~such agreements and schedules~~section B or C above, the city ~~may~~ should select the best value vendor. In determining best value, the city shall consider the following factors:

1. Price, including any additional price reductions offered;

2. Past performance;

3. Special features of the services, supplies or equipment required for effective performance;

4. Trade-in considerations;

5. Probable life of the item selected when compared with that of a comparable item;

6. Warranty considerations;

7. Maintenance availability and expense;

8. Environmental and energy efficiency considerations;

9. Delivery terms;

10. Location of the vendor.

DC. Best Interests. Prior to purchasing any services, supplies or equipment under this section, the purchasing officer must determine that the procurement is in the best interests of the city.~~D. Price. Any services, supplies or equipment purchased under this section must be the same and be offered at the same or lower price as the services, supplies or equipment offered to the local, state or federal governmental jurisdiction or public agency, except that the city may approve variation in price of not more than 10 percent for customizing the order or for modifications or variations in the city's best interests.~~

E. Price. Any services, supplies or equipment purchased under this section must be purchased at the same or lower price as the local, state or federal governmental jurisdiction, or public agency, except that the city may approve variation in price of not more than fifteen (15) percent for customizing the order or for modifications or variations in the city's best interests. In

the event the agreement, cooperative agreement, or multiple award schedule offers a list of services, supplies or equipment for the local, state or federal governmental jurisdiction, or public agency to choose from, the city may select any of the offered services, supplies or equipment, so long as the services, supplies or equipment are offered at the same or lower price as the services, supplies or equipment offered to the local, state or federal governmental jurisdiction, or public agency.

SECTION 2. This ordinance shall be effective at the expiration of thirty (30) days from the date of adoption.

SECTION 3. The City Clerk is hereby directed to cause this ordinance to be published in full at least once within fourteen (14) days after it is adopted in a newspaper of general circulation in the City, or shall within fourteen (14) days after its adoption cause this ordinance to be posted in full in at least three (3) public places in the City and enter in the Ordinance Book a certificate stating the time and place of said publication by posting.

PASSED AND ADOPTED by the Council of the City of Roseville this ___ day of _____, 20__, by the following vote on roll call:

AYES COUNCILMEMBERS:

NOES COUNCILMEMBERS:

ABSENT COUNCILMEMBERS:

_____

MAYOR

ATTEST:

_____

City Clerk

COUNCIL COMMUNICATION

CC #: 8298
File #: 0800-06 & 0201-01

Title:	Blue Oaks Commerce Center Project - Materials Testing Service Agreement Amendment and Budget Adjustment
Contact:	Guy Howes 916-774-5430 ghowes@roseville.ca.us

Meeting Date: 3/1/2017
Item #: 6.11.

RECOMMENDATION TO COUNCIL

The Development Services Department, Engineering Division requests that the City Council approve the following:

A. Authorize the amendment of the Service Agreement by $10,000.00 to a new not-to-exceed amount of $28,767.13, and:

B. Adopt an Ordinance approving a budget adjustment of $10,000.00 from revenue received to off-set expenditures within the pass through billing account for professional contract services associated with development.

BACKGROUND

In the spring of 2014, construction began on the Blue Oaks Commerce Center project located at the intersection of Blue Oaks Boulevard and Washington Boulevard. Public Improvements consisted of roadway infrastructure, drainage facilities and two new traffic signals at each end of Freedom Way which presently serve the FBI building and other parcels. The City's geotechnical engineering firm, The RMA Group, provided material testing support on the project as part of an existing On-Call contract with the City. These services were necessary to ensure construction materials met the conditions of the project. RMA's initial proposal for this specific project included both Phases I and II. Under typical development obligations, the developer is responsible for all plan check and inspection reimbursements to the City, including consultant reimbursement for RMA material testing services.

With the majority of Phase I complete in the spring of 2016, construction for Phase II was scheduled to follow but was delayed due to State permitting for work located within the State right-of-way as part of this project. This coupled with RMA's On-Call contract expiration date in June 2016, led staff to establish minor Service Agreements with RMA to complete the project and maintain continuity of material testing services. However, additional construction delays were incurred due to existing underground utility conflicts and plan revision processing. Thus, RMA's

On-Call contract expired and the Service Agreement amounts were not sufficient to complete the project.

Presently, the Blue Oaks Commerce Center Project is substantially complete and nearing formal City acceptance. Staff is finalizing all project documentation and reviewing past invoices, additional scopes of work, and change orders from RMA. Once complete, Staff will prepare the Certificate of Completion and agendize for City Council action in the first quarter of 2017. Since the Service Agreement amount of $28,767.13 exceeded the permissible limit defined per Ordinance, City Council action is necessary. This budget adjustment will amend the Service Agreement and fulfil City obligations to RMA and close out the project.

FISCAL IMPACT

There would be no fiscal impact to the City's General Fund as a result of this action. All development projects are full cost recovery projects which require that the applicant/developer fully find the project including consultant services. These funds are considered “Pass-Through” monies, in which all plan check and inspection service expenses are reimburse by the applicant/developer.

ECONOMIC DEVELOPMENT / JOBS CREATED

This action does not correlate into a quantifiable economic benefit.

ENVIRONMENTAL REVIEW

Approval of the proposed contract is not considered a “project” as defined by the California Environmental Quality Act (CEQA) (CEQA Guidelines 15378). No CEQA action is required.

Respectfully Submitted,

Guy Howes, Senior Engineer

Kevin Payne, Development Services Director

_____

Rob Jensen, City Manager

ATTACHMENTS:

Description

Resolution No. 17-81

RMA Service Agreement Amendment

Ordinance No. 5808

RMA Request for Budget Adjustment Form

RESOLUTION NO. 17-81

APPROVING AMENDMENT NO. 1 TO SERVICE AGREEMENT BETWEEN CITY OF ROSEVILLE AND RMA GROUP, INC., AND AUTHORIZING THE CITY MANAGER TO EXECUTE IT ON BEHALF OF THE CITY OF ROSEVILLE

WHEREAS, Amendment No. 1 to Service Agreement (S1703518), for material testing services on the Blue Oaks Commerce Center project, between the City of Roseville and RMA Group, Inc., has been prepared and reviewed by the Council; and

NOW, THEREFORE, BE IT RESOLVED by the Council of the City of Roseville that said first amendment to service agreement is approved and that the City Manager is authorized to execute it on behalf of the City of Roseville.

PASSED AND ADOPTED by the Council of the City of Roseville this ___ day of _____, 20__, by the following vote on roll call:

AYES COUNCILMEMBERS:

NOES COUNCILMEMBERS:

ABSENT COUNCILMEMBERS:

_____
MAYOR

ATTEST:

_____
City Clerk

PURCHASING
CITY OF ROSEVILLE

2005 HILLTOP CIRCLE, ROSEVILLE, CA 95747
(916) 774-5720 • TDD (916) 774-5220 • FAX (916) 774-5736

SERVICE AGREEMENT AMENDMENT

SERVICE AGREEMENT No: **S1703518**
AMENDMENT No: 1

SERVICE LOCATION: BLUE OAKS COMMERCE CTR
ROSEVILLE, CA

Contractor No.: V37990

SUBMIT ALL INVOICES TO:
CITY OF ROSEVILLE
Finance Department
311 Vernon Street
Roseville, CA 95678

Contractor License No.: N/A
Business License No.:

Department: DEVELOPMENT SERVICES

Telephone No.: (916)631-7194 Fax: (916)631-7256

Email address: jbishop@rmacompanies.com
Contractor: RMA GROUP INC.
ATTN: JIM BISHOP
3150 FITZGERALD RD.
RANCHO CORDOVA, CA 95742

Acct. Code: 90160-5108/160037-30-30

Buyer: BRANDON MENDONCA
Phone: (916) 774-5724

Service Agreement Number **S1703518** ("Agreement"), which was executed on, 11/15/16, is hereby modified as follows:

Select all provisions that apply:

☒ The Total Cost of Service payable under this Agreement is modified from $18,767.13 to $28,767.13. The purpose of this modification is to add dollars for material testing at the Blue Oaks Commerce development project.

All other provisions of the Agreement shall remain unchanged and in full force and effect.

CONTRACTOR:

By: _____

Title: President

By: _____

Title: _____

CITY OF ROSEVILLE,
A MUNICIPAL CORPORATION:

By: _____
Rob Jensen
City Manager

Distribution: 1- Purchasing, 1 - Contractor, 1 - Originating Dept.

ORDINANCE NO. 5808

ORDINANCE OF THE COUNCIL OF THE CITY OF ROSEVILLE AUTHORIZING CERTAIN AMENDMENTS TO THE 2016-17 BUDGET AND DECLARING THIS ORDINANCE TO BE IMMEDIATELY EFFECTIVE AS AN APPROPRIATION MEASURE

THE CITY OF ROSEVILLE ORDAINS:

SECTION 1. The City of Roseville Annual Budget, Fiscal Year 2016-17, is hereby amended by transferring appropriation to and from the activities indicated below:

Appropriate funds for material testing services on the Blue Oaks Commerce Center project, per request of the Development Services Department, as listed on the attached Request for Budget Adjustment in the amount of $10,000.00.

SECTION 2. This ordinance is hereby declared to be an appropriation measure, immediately effective pursuant to the provisions of Section 5.03 of the Charter.

SECTION 3. The City Clerk is hereby authorized and directed to post a true copy of the foregoing ordinance in each of three (3) conspicuous locations in the City and she shall immediately after such posting enter in the ordinance book, under the record of the ordinance, a certificate under her hand stating the time and place of such publication by posting.

PASSED AND ADOPTED by the Council of the City of Roseville, this _____ day of _____, 20__, by the following vote on roll call:

AYES COUNCILMEMBERS:

NOES COUNCILMEMBERS:

ABSENT COUNCILMEMBERS:

_____
MAYOR

ATTEST:

_____
City Clerk

CITY OF ROSEVILLE CALIFORNIA

REQUEST FOR BUDGET ADJUSTMENT
FINANCE DEPARTMENT

Instructions: Complete all necessary fields. Fields marked with an asterisk (*) are mandatory and required for processing. Obtain required approvals and process according to the procedure outlined in:
A.R. 6.01 Budget Adjustment Policy & Procedure.

For more detailed budget adjustment training information, including examples, please click on the following link:
Miscellaneous Budget Training Information.

REQUESTER*: Guy Howes #5430

DEPARTMENT/DIVISION*: Development Services/Engineering

FISCAL YEAR/EFFECTIVE DATE*: FY16/17

PROPOSED COUNCIL DATE (if applicable): 03/01/2017

USE OF FUNDS*

AMOUNT*	ACCOUNT NUMBER GL ORG KEY*	GL OBJECT*	GL FUND*	JL PROJECT	JL ACTIVITY	Account Title/Activity Description*
10,000	90160	5108	0100			Plan Check/Inspection - Consolidated Billing
						Expense Acct
$ 10,000	TOTAL					

SOURCE OF FUNDS*

AMOUNT*	ACCOUNT NUMBER GL ORG KEY	GL OBJECT	GL FUND*	JL PROJECT	JL ACTIVITY	Account Title/Activity Description*
10,000	90160	3575	0100			Plan Check/Inspection - Consolidated Billing
						Revenue Acct
$ 10,000	TOTAL					

FINANCE USE

Approved: Kathy Cullen 1/27/16
BUDGET MANAGER/DESIGNEE DATE

Finance Director* Date

Justification for Budget Adjustment*:

Pass Through money for development plan check/inspection - The RMA Group

Approved:
REQUESTING DEPARTMENT HEAD/DESIGNEE DATE

Approved:
CITY MANAGER DATE

Revised 6/2016

COUNCIL COMMUNICATION

CC #: 8297
File #: 0800-06 & 0201-01

Title:	On-Call Construction Inspection Services - Professional Services Agreement Amendment and Budget Adjustment
Contact:	Guy Howes 916-774-5430 ghowes@roseville.ca.us

Meeting Date: 3/1/2017
Item #: 6.12.

RECOMMENDATION TO COUNCIL

A. Adopt the attached resolution approving Amendment No. 1 to the agreement with Psomas for an additional $500,000.00 to continue to provide On-Call construction inspection services; and, authorize the City Manager to execute the amendment on behalf of the City.
B. Adopt an Ordinance approving a budget adjustment transferring $500,000 from revenue received to off-set expenditures within the pass through billing account for professional contract services associated with development.

BACKGROUND

On May 18, 2016, the City Council adopted a resolution authorizing the City Manager to execute the agreement referenced above, (Resolution No. 16-162). Since that time multiple departments have utilized this On-Call agreement to assign Psomas staff to construction inspection projects including: various private development projects from the Environmental Utilities Department, and the Roseville Road Realignment project within the Public Works Department. These two projects alone have nearly exhausted the original not-to-exceed budget of $500,000 to date, thus the necessity to amend the original master agreement.

Psomas inspection services were also utilized by the Development Services Department for staff augmentation during heavy workload periods when full-time City inspection staff were unable to keep pace with the demands of private development this past summer. Going forward, and beginning this calendar year, each City department needing consultant construction inspection services will establish their own respective professional service contracts as to not inundate the subject Development Services Department agreement. Specifically, each department will solicit proposals through standardized written procedures established by the City. This is expected to promote better project expense tracking and reporting within the Finance Department.

Since the Psomas master agreement duration has a two-year term limit with a one-year extension option, it was estimated that an additional $500,000.00 to the existing $500,000.00 not-to-exceed amount would be necessary to stay in compliance with the agreement provisions. Thus, the

proposed not-to-exceed amount would be one-million dollars.

FISCAL IMPACT

The actions requested as part of this item have no impact to the City's General Fund. Development agreements between the City and developers require the developers to reimburse the City for actual costs of providing inspection services. Similarly, capital improvement project budgets include funds for construction management services. This entire amount of the agreement and this proposed amendment are considered “pass-through” in which all construction inspection services would be reimbursed by either developers or allocated CIP budgets with no incurred expenses to the General Fund.

ECONOMIC DEVELOPMENT / JOBS CREATED

Note a national economic development study has shown that for every $92,000 invested in public projects, one (1) job is created.

ENVIRONMENTAL REVIEW

The California Environmental Quality Act (CEQA), does not apply to activities that will not result in a direct or reasonably foreseeable indirect physical change in the environment (CEQA Guidelines § 15061 (b) (3). Approval of the proposed contract is not considered a “project” as defined by the California Environmental Quality Act (CEQA) (CEQA Guidelines 15378). No CEQA action is required.

Respectfully Submitted,

Guy Howes, PE Senior Engineer

Kevin Payne, Development Services Director

_____

Rob Jensen, City Manager

ATTACHMENTS:

Description

Resolution No. 17-80

Psomas First Amendment

Ordinance No. 5807

Psomas Amendment #1 Request for Budget Adjustment Form

RESOLUTION NO. 17-80

APPROVING A FIRST AMENDMENT TO PROFESSIONAL SERVICES AGREEMENT BETWEEN THE CITY OF ROSEVILLE AND PSOMAS, AND AUTHORIZING THE CITY MANAGER TO EXECUTE IT ON BEHALF OF THE CITY OF ROSEVILLE

WHEREAS, a first amendment to Professional Services Agreement for on-call construction inspection services, by and between the City of Roseville and Psomas, has been reviewed by the City Council; and

NOW, THEREFORE, BE IT RESOLVED by the Council of the City of Roseville that said first amendment is hereby approved and that the City Manager is authorized to execute it on behalf of the City of Roseville.

PASSED AND ADOPTED by the Council of the City of Roseville this ___ day of _____, 20__, by the following vote on roll call:

AYES COUNCILMEMBERS:

NOES COUNCILMEMBERS:

ABSENT COUNCILMEMBERS:

_____
MAYOR

ATTEST:

_____
City Clerk

FIRST AMENDMENT TO

PROFESSIONAL SERVICES AGREEMENT

Project: Master Agreement for On-Call Construction Inspection Services

THIS FIRST AMENDMENT TO AGREEMENT is made and entered into this ___ day of _____, 20__, by and between the City of Roseville, a municipal corporation ("CITY"), and Psomas, a California corporation ("CONSULTANT"); and

W I T N E S S E T H:

WHEREAS, CITY and CONSULTANT previously entered into a Professional Services Agreement dated May 18, 2016 ("Agreement") regarding the Master Agreement for On-Call Construction Inspection Services ("Project"); and

WHEREAS, CITY desires to increase the contract amount to account for the increased need of on-call construction inspection services; and

WHEREAS, CONSULTANT is willing and able to provide such additional services as described in CONSULTANT's letter dated January 11, 2017, which is attached hereto as Exhibit "A" and incorporated herein by reference; and

NOW, THEREFORE, the parties agree as follows:

1. Paragraph 2 of the Agreement is amended by adding an additional paragraph to read as follows:

"CITY shall pay five hundred thousand dollars ($500,000), in consideration of the

additional on-call construction inspection services. This brings the total not to exceed contract amount to one million dollars ($1,000,000)."

3. All other provisions of the Agreement shall remain unchanged and in full force and effect.

IN WITNESS WHEREOF, the City of Roseville, a municipal corporation, has authorized the execution of this First Amendment to Agreement in duplicate by its City Manager and attested to by its City Clerk under the authority of Resolution No. _____, adopted by the Council of the City of Roseville on the ___ day of _____, 20__, and CONSULTANT has caused this First Amendment to Agreement to be executed.

CITY OF ROSEVILLE, a
municipal corporation

BY: _____
ROB JENSEN
City Manager

ATTEST:

BY: _____
SONIA OROZCO
City Clerk

APPROVED AS TO FORM:

BY: _____
ROBERT R. SCHMITT
City Attorney

PSOMAS, a
California corporation

BY: _____

its: Vice President

and

BY: _____

its: CFO & Treasurer

[SIGNATURES CONTINUED ON FOLLOWING PAGE]

APPROVED AS TO SUBSTANCE:

BY: _____
KEVIN PAYNE
Development Services Director

EXHIBIT "A"

PSOMAS

Balancing the Natural and Built Environment

January 11, 2017

Mr. Guy Howes, PE, Senior Civil Engineer
Development Services Department
City Clerk's Office
CITY OF ROSEVILLE
311 Vernon Street
Roseville, CA 95678

Subject: Request to Extend Contract to Perform On-Call Construction Management and Inspection Services

Dear Mr. Howes:

Per our conversation, please consider this a request for the City to extend Psomas' current on-call Construction Management and Extension contract by a not-to-exceed amount of $500,000. The provisions included in Exhibit B of our 2016 Cost Proposal (Hourly Rate Sheet) remain unchanged.

Under our original contract, a not-to-exceed value of $500,000 was selected. As part of our on-call services, Psomas has been providing full construction management services for the Roseville Road Widening Project. This project, which began in June of 2016, is near complete but has consumed just over $300,000 of contract budget. After consideration for our Environmental Utilities support, our initial contract amount has $94,000 remaining of the original $500,000 allocation. Increasing our not-to-exceed amount by $500,000 will prevent our original contract from being exceeded by potential work that could occur during the remainder of the contract period.

The Psomas CM Team looks forward to continuing an excellent working relationship with you and the City of Roseville.

Sincerely,

PSOMAS

Frank C. Martin III, PE, ENV SP
Project Manager

1075 Creekside Ridge Drive
Suite 200
Roseville, CA 95678-3504

www.Psomas.com

UNANIMOUS WRITTEN CONSENT
OF THE
BOARD OF DIRECTORS
OF
PSOMAS
a California corporation

March 15, 2016

THE UNDERSIGNED, being all of the members of the Board of Directors of Psomas, a California corporation (the "Corporation"), hereby adopt the following resolutions without a meeting as of the date set forth above, pursuant to Section 307(b) of the General Corporation Law of California:

RESOLVED that the following, being the Officers of the Corporation, be and hereby are authorized to execute any and all documents required to conduct the business of the Corporation, including, but not limited to contracts, leases and certifications;

IT IS FURTHER RESOLVED that any one signature of the Officers listed herein shall be sufficient to bind the Corporation;

TIMOTHY G. PSOMAS	Chairman Emeritus
BLAKE N. MURILLO	Chairman
RYAN E. McLEAN	Chief Executive Officer
LOREN L SOKOLOW	Chief Financial Officer, Treasurer, Assistant Secretary
DEBRA TILSON LAMBECK	Vice President, Secretary
CRAIG AHRENS	Vice President
CHRISTINA ANDERSEN	Vice President
ALEJANDRO ANGEL	Vice President
ROSS W. BARKER	Vice President
BRETT BARNETT	Vice President
TEDDY C. BOLDEN, II	Vice President
JOSEPH L. BOYLE	Vice President
KATHLEEN BRADY	Vice President
BRIAN E. BULLOCK	Vice President
AGUSTIN CHANG	Vice President
JEFFREY CHESS	Vice President
HAN CHU	Vice President
MATTHEW D. CLARK	Vice President
MICHAEL J. CREHAN	Vice President
MIKE DALY	Vice President
PAUL J. ENNEKING	Vice President
JEREMY L. EVANS	Vice President
PETER FITZPATRICK	Vice President
STEVEN FRIESON	Vice President
HARVEY GOBAS	Vice President
ERNEST GOMEZ	Vice President
CRAIG GOOCH	Vice President
DANNIE B. GREEN	Vice President
ANDREW N. GUST	Vice President
TIMOTHY G. HAYES	Vice President
CHARLES HEFFERNAN	Vice President
GREGORY A. HELMER	Vice President
MELISSA HOWE	Vice President
ROBERT J. IANNARINO	Vice President
ANN JOHNSTON	Vice President
JOAN PATRONITE KELLY	Vice President
BRUCE KIRBY	Vice President

JACOB LIPA	Vice President
THOMAS C. LODGE	Vice President
STEVE MARGARONI	Vice President
FRANK MARTIN	Vice President
PAT McGARRITY	Vice President
THOMAS P. McGOVERN	Vice President
BERNIE McINALLY	Vice President
JOEL B. MILLER	Vice President
DAVID A. MORITZ	Vice President
LESLIE MORTON	Vice President
ANDREW NICKERSON	Vice President
ROBERT C. OLSON	Vice President
MICHAEL POLLARD	Vice President
RICH RADOYCIS	Vice President
SCOTT ROCKE	Vice President
MATTHEW J. ROWE	Vice President
CLIFF SIMENTAL	Vice President
KRISTIN STARBIRD	Vice President
RICHARD M. SULLIVAN	Vice President
MICHAEL D. SWAN	Vice President
ROBERT J. TALAFUS	Vice President
KEVIN T. THORNTON	Vice President
BYRON TOBEY	Vice President
REUBEN TOLENTINO	Vice President
ANISSA VOYIATZES	Vice President
ANDREW WALCKER	Vice President
DONALD L. WHITELEY	Vice President
LENI ZARATE	Vice President

This Unanimous Written Consent shall be filed with the Minutes of the proceedings of the Board of Directors, and the actions taken hereby shall have the same force and effect as if taken at a meeting duly called and held.

Blake Murillo

Alejandro Angel

Matthew D. Clark

Gary H. Hunt

Steve Margaroni

Ryan E. McLean

Avedick B. Poladian

Cliff Simental

Donald L. Whiteley

ORDINANCE NO. 5807

ORDINANCE OF THE COUNCIL OF THE CITY OF ROSEVILLE AUTHORIZING CERTAIN AMENDMENTS TO THE 2016-17 BUDGET AND DECLARING THIS ORDINANCE TO BE IMMEDIATELY EFFECTIVE AS AN APPROPRIATION MEASURE

THE CITY OF ROSEVILLE ORDAINS:

SECTION 1. The City of Roseville Annual Budget, Fiscal Year 2016-17, is hereby amended by transferring appropriation to and from the activities indicated below:

Appropriate funds for on-call construction inspection services, per request of the Development Services Department, as listed on the attached Request for Budget Adjustment in the amount of $500,000.00.

SECTION 2. This ordinance is hereby declared to be an appropriation measure, immediately effective pursuant to the provisions of Section 5.03 of the Charter.

SECTION 3. The City Clerk is hereby authorized and directed to post a true copy of the foregoing ordinance in each of three (3) conspicuous locations in the City and she shall immediately after such posting enter in the ordinance book, under the record of the ordinance, a certificate under her hand stating the time and place of such publication by posting.

PASSED AND ADOPTED by the Council of the City of Roseville, this _____ day of _____, 20__, by the following vote on roll call:

AYES COUNCILMEMBERS:

NOES COUNCILMEMBERS:

ABSENT COUNCILMEMBERS:

_____
MAYOR

ATTEST:

_____
City Clerk

CITY OF ROSEVILLE CALIFORNIA

REQUEST FOR BUDGET ADJUSTMENT
FINANCE DEPARTMENT

Instructions: Complete all necessary fields. Fields marked with an asterisk (*) are mandatory and required for processing. Obtain required approvals and process according to the procedure outlined in:
A.R. 6.01 Budget Adjustment Policy & Procedure.

For more detailed budget adjustment training information, including examples, please click on the following link:
Miscellaneous Budget Training Information.

REQUESTER*: Guy Howes #5430

DEPARTMENT/DIVISION*: Development Services/Engineering

FISCAL YEAR/EFFECTIVE DATE*: FY16/17

PROPOSED COUNCIL DATE (if applicable): 03/01/2017

USE OF FUNDS*

AMOUNT*	ACCOUNT NUMBER					Account Title/Activity Description*
	GL			JL		
	ORG KEY*	OBJECT*	FUND*	PROJECT	ACTIVITY	
500,000	90160	5108	0100			Plan Check/Inspection - Consolidated Billing
						Expense Acct
$ 500,000	TOTAL					

SOURCE OF FUNDS*

AMOUNT*	ACCOUNT NUMBER					Account Title/Activity Description*
	GL			JL		
	ORG KEY	OBJECT	FUND*	PROJECT	ACTIVITY	
500,000	90160	3575	0100			Plan Check/Inspection - Consolidated Billing
						Revenue Acct
$ 500,000	TOTAL					

FINANCE USE

Approved: Kathy Cullen 1/26/17
BUDGET MANAGER/DESIGNEE DATE

Finance Director: Date

Justification for Budget Adjustment*:

Pass Through money for development plan check/inspection - Psomas Amendment #1

Approved:
REQUESTING DEPARTMENT HEAD / DESIGNEE DATE

Approved:
CITY MANAGER DATE

Revised 6/2016

COUNCIL COMMUNICATION

CC #: 8287
File #: 0600-02

Title: Out of State Travel Request - Police Department
Contact: Dee Dee Gunther 916-774-5015 ddgunther@roseville.ca.us

Meeting Date: 3/1/2017
Item #: 6.13.

RECOMMENDATION TO COUNCIL

Approve Sgt. Missy Morris' travel to attend the Florida Association of Hostage Negotiators State Conference in Saint Petersburg from June 4-9, 2017.

BACKGROUND

Sgt. Missy Morris is a supervisor on the Roseville Police Department's Critical Incident Negotiation Team, and also serves on the board of the California Association of Hostage Negotiators as the conference chair. At the Florida State Hostage Negotiators Conference, she will have the opportunity to hear and evaluate speakers on many different topics of interest to hostage negotiators, including psychology, communicating with different age groups and cultural backgrounds, new laws, trends and case studies. She will also have the opportunity to meet with fellow board members and discuss potential speakers and topics for California's conference. The conference will be beneficial for the ongoing development of Roseville's hostage negotiation team, as well as for the larger community of law enforcement hostage negotiators in California.

FISCAL IMPACT

The California Association of Hostage Negotiators (CAHN) will pay all of Sgt. Morris's expenses, including conference fees, transportation, lodging and food. There is no cost to the City.

ECONOMIC DEVELOPMENT / JOBS CREATED

Not applicable to this request for out-of-state travel.

ENVIRONMENTAL REVIEW

This out of state travel request is not considered a “project” as defined by the California Environmental Quality Act (CEQA). (CEQA Guidelines §15378). Consequently no CEQA action is required.

Respectfully Submitted,

Dee Dee Gunther, Department Public Information Officer

Daniel Hahn, Police Chief

_____

Rob Jensen, City Manager

ATTACHMENTS:

Description

Conference agenda

FAHN Conference 2017

	Monday, June 05, 2017
Time	**St. Petersburg Ballroom**
8:00-9:00	**Opening Ceremonies** Adam Goodner
9:00-12:00	**Sheriff Susan Benton (Ret)** **Keynote Speaker**
12:00-1:00	***Lunch (on your own)***
1:00-5:00	**Group Think** **Kirk Fasshauer**

FAHN Conference 2017

	Tuesday, June 06, 2017
Time	**St. Petersburg Ballroom**
8:00-12:00	**Read, Recognize and Respond Certification Course** Lt. Jim Glennon Calibre Press
12:00-1:00	***Lunch (on your own)***
1:00-5:00	**Read, Recognize and Respond Certification Course (continued)** Jim Glennon Calibre Press

FAHN Conference 2017

	Wednesday, June 07, 2017		
Time	**St. Petersburg 1**	**St. Petersburg 2**	**St. Petersburg 3**
8:00-10:00	**Ocala P.D.** Ron Malone	**31 Hour Standoff NYC Case Study** **Samuel Farina**	**Portland P.D. Case Study** **Sgt. Troy King**
10:00-12:00		**Ft. Wayne Incident Case Study** **Terry Holmes / Sofie Rosales**	**Port St. Lucie P.D. Case Study** **Brian Kenney**
12:00-1:00	***Lunch (on your own)***	***Lunch (on your own)***	**Lunch (on your own)**
1:00-2:00			**FAHN Business Meeting**
2:00-3:30		**Ft. Wayne Incident Case Study** **Terry Holmes / Sofie Rosales**	**Portland P.D. Case Study** **Sgt. Troy King**
3:30-5:30	**Ocala P.D. Case Study** **Ron Malone**	**31 Hour Standoff NYC Case Study** **Samuel Farina**	**Port St. Lucie P.D. Case Study** **Brian Kenney**

FAHN Conference 2017

Thursday, June 08, 2017

Time	St. Petersburg 1	St. Petersburg 2	St. Petersburg 3
8:00-10:00	Understanding Millenials Dr. Tina Jaeckle	Psychology & Technology Liz Bradshaw	Advocating for the Negotiation Team Jim McDonald
10:00-12:00	Understanding Millenials Continued Dr. Tina Jaeckle	Event Horizon & Terminal Conflict Dr. Alexander Morton	Overview of Islam Sgt. Brian Shorette
12:00-1:00	*Lunch (on your own)*		*Lunch (on your own)*
1:00-3:00	Cumulative Stress for Negotiators Dr. Tina Jaeckle	Verbal Communication Tactics Dr. Laurence Miller	The Art of Coaching Ofc. Michael Savasta
3:00-5:00	Cumulative Stress for Negotiators Continued Dr. Tina Jaeckle	Verbal Communication Tactics Continued Dr. Laurence Miller	The Art of Coaching (continued) Ofc. Michael Savasta
6p-9:30p	Dinner Banquet and Election Announcements (Grand Bay Ballroom)		

FAHN Conference 2017

	Friday, June 09, 2017
Time	St. Petersburg Ballroom
8:00-10:00	Negotiator Problems Dr. Andrew Young
10:00-11:30	Negotiator Problems (continued) Dr. Andrew Young
11:30-12:00	Closing Ceremonies
1:00-5:00	Networking Session

COUNCIL COMMUNICATION

CC #: 8302
File #: 0600-02

Title:	Out of State Travel Request - Economic Development Housing Division
Contact:	Melissa Hagan 916-774-5476 mhagan@roseville.ca.us

Meeting Date: 3/1/2017
Item #: 6.14.

RECOMMENDATION TO COUNCIL

Recommending Council approve out of state travel for one Housing Analyst of the Housing Division of the Economic Development Department to attend a 2.5 day training for the federal Community Development Block Grant (CDBG) program held in New Orleans, Louisiana, March 12 – 15, 2017. This Housing and Urban Development (HUD)-hosted training is free of charge and the associated cost of $1,375.00 to cover airfare, per diem, and lodging was approved in the FY2016-17 budget for the CDBG program. There will be no impact to the General Fund.

BACKGROUND

The City has been a recipient of CDBG entitlement grant awards since the 1980's and has infused nearly $12 million into the Roseville community through this funding in the form of grants and loans to local public services, public improvements, owner-occupied housing rehabilitation and affordable housing development. The requested training was developed to guide and assist the staff of Community Development Block Grant (CDBG) Entitlement grantees in the implementation of their local CDBG programs using national objectives and eligible activities. The training will provide detailed information regarding HUD policies and federal regulations regarding the administration, financial management, labor requirements and other federal statutes of the program – all valuable skills necessary for the continued successful administration of the CDBG program. The training focuses on key program topics such as national objectives, eligible activities, program administration, financial management, IDIS, performance measurement, and reporting and recordkeeping. In addition, the course will provide answers to common CDBG questions and will highlight HUD interpretation of key policy issues. This training will also include information regarding recent updates to the program requirements on budgeting, timely use of the funds, and program auditing.

Recently, the program has been administered by a housing analyst who is relatively new to the program and would benefit from HUD's professional in-person training. Although HUD offers trainings throughout the United States, enrollment is very limited and difficult to achieve due to high demand. In addition, HUD trainings are typically free and offered sporadically based on HUD's operating budget.The division attempted to enroll the CDBG program's analyst in a San Francisco training last fall, and was unsuccessful in waitlisting the training due to the short timespan between

the Analyst's hire and the training date. Staff also checked with HUD and confirmed that no other local trainings (in California or neighboring states) are planned to be held this fiscal year. Although the training in New Orleans is out of state, staff feels that the cost is not exorbitant and can be covered by the administrative component of the CDBG grant without any impact on the General Fund. Staff also believes that this training is imperative for this position to ensure proper instruction for the program administrator and in order to continue the City's success in using the CDBG program.

FISCAL IMPACT

The estimated cost for airfare, logding and per diem is $1,375.00 and was approved in the FY2016-17 budget for the CDBG program (Fund 260). The CDBG program is a federally-funded grant program through the Department of Housing and Urban Development. This item will have no impact on the General Fund.

ECONOMIC DEVELOPMENT / JOBS CREATED

Not applicable.

ENVIRONMENTAL REVIEW

The California Environmental Quality Act (CEQA) does not apply to activities that will not result in a direct or reasonably foreseeable indirect physical change in the environment (CEQA Guidelines Section 15061(b)(3). Travel requests do not include the potential for significant environmental effects and therefore are not subject to CEQA.

Respectfully Submitted,

Melissa Hagan, Administrative Analyst II

Chris Robles, Economic Development Director

_____

Rob Jensen, City Manager

COUNCIL COMMUNICATION

CC #: 8295
File #: 0102-06

Title: Proclamation - Child Abuse Prevention Month
Contact: Heather Blanco 916-774-5265 hblanco@roseville.ca.us

Meeting Date: 3/1/2017
Item #: 6.15.

RECOMMENDATION TO COUNCIL

Proclaim April 2017 as Child Abuse Prevention month and reaffirm dedication to protecting the children of the community, and call upon citizens to increase their participation in awareness of preventing child abuse.

BACKGROUND

Not applicable.

FISCAL IMPACT

Not applicable.

ECONOMIC DEVELOPMENT / JOBS CREATED

Not applicable.

ENVIRONMENTAL REVIEW

Not applicable.

Respectfully Submitted,

Heather Blanco, Deputy City Clerk

Sonia Orozco, City Clerk

Rob Jensen, City Manager

ATTACHMENTS:

Description

Proclamation - Child Abuse Prevention

City of Roseville
Proclamation

CHILD ABUSE PREVENTION MONTH

April 2017

WHEREAS, in 2015, Placer County investigated 3,231 reports of child abuse and neglect, and of those, 1,117 allegations were from the City of Roseville; and

WHEREAS, all adults and caregivers have a responsibility, as neighbors, community members, and citizens to create healthy, safe, and nurturing environments for children; and

WHEREAS, safe and healthy childhoods produce confident, successful, and independent adults; and

WHEREAS, child abuse and neglect often occurs when people find themselves in isolated or stressful situations, without community resources, and don't know how to cope; and

WHEREAS, the majority of child abuse cases stem from situations and conditions that are preventable, and when communities are supportive, active, and engaged, child abuse and neglect can be reduced; and

WHEREAS, effective prevention programs succeed because of meaningful connections and partnerships created between agencies, schools, faith-based organizations, law enforcement agencies, and the business community; and

WHEREAS, for 28 years, KidsFirst, Counseling, and Family Resource Centers have functioned as a Child Abuse Prevention Council for Placer County, with two locations in Roseville and Auburn; and

WHEREAS, wearing a blue ribbon on April 7th and displaying a pinwheel garden in April will serve as a positive reminder that together, we can treat and prevent child abuse and neglect.

NOW, THEREFORE, I, SUSAN ROHAN, MAYOR OF THE CITY OF ROSEVILLE, CALIFORNIA, on behalf of the Roseville City Council, do hereby proclaim **April 2017** as **CHILD ABUSE PREVENTION MONTH** and reaffirm dedication to protecting the children of the community, and call upon citizens to increase their participation in awareness of preventing child abuse.

SIGNED AND APPROVED this 1st day of March, 2017.

_____

SUSAN ROHAN, MAYOR

ATTEST:

_____

SONIA OROZCO, CITY CLERK
CITY OF ROSEVILLE, CALIFORNIA

COUNCIL COMMUNICATION

CC #: 8296
File #: 0102-10

Title: Resolution of Commendation and Appreciation to Mike Bloom
Contact: Heather Blanco 916-774-5265 hblanco@roseville.ca.us

Meeting Date: 3/1/2017
Item #: 6.16.

RECOMMENDATION TO COUNCIL

Recommend Mike Bloom be commended for his outstanding service and dedication to the City of Roseville, congratulated for his many accomplishments, and wished a long, healthy, and enjoyable retirement.

BACKGROUND

Not applicable.

FISCAL IMPACT

Not applicable.

ECONOMIC DEVELOPMENT / JOBS CREATED

Not applicable.

ENVIRONMENTAL REVIEW

Not applicable.

Respectfully Submitted,

Heather Blanco, Deputy City Clerk

Sonia Orozco, City Clerk

Rob Jensen, City Manager

ATTACHMENTS:

Description

Resolution of Commendation and Appreciation to Mike Bloom

City of Roseville
RESOLUTION
of
COMMENDATION AND APPRECIATION

WHEREAS, Mike Bloom began his distinguished career with the City of Roseville on January 23, 1989 as an Electric Resources Analyst I, promoted to Electric Resources Analyst II on November 28, 1990, promoted to Power Supply Manager on September 12, 2005, and promoted to Assistant Electric Utility Director on March 26, 2011; and

WHEREAS, Mike has been an essential contributor to the development of many Electric Department partnership documents including, the original Northern California Power Agency pooling agreement, the 2008 and 2012 Integrated Resource Plans, and the agreements to include Roseville in the Western Control Area and the Balancing Authority of Northern California; and

WHEREAS, Mike managed several projects such as, retail rate cases, initial fuel supply contracts for the Roseville Energy Park, the purchase of Roseville Power Plant #2 from Northern California Power Agency, and he assumed the leadership of the Generation Division and mentoring key staff; and

WHEREAS, Mike received the Pride of Roseville Commendation of Excellence Team Award on July 19, 1993 for establishing a new refund allocation to Northern California Power Agency; and

WHEREAS, Mike is retiring after more than 28 years of honorable service to the citizen of Roseville and Roseville Electric, and he will be greatly missed and remembered by all; and

NOW, THEREFORE, BE IT RESOLVED BY THE COUNCIL OF THE CITY OF ROSEVILLE, CALIFORNIA, that **MIKE BLOOM** be commended for his outstanding service and dedication to the City of Roseville, congratulated for his many accomplishments, and wished a long, healthy, and enjoyable retirement.

SIGNED AND APPROVED this 1st day of March, 2017.

_____

SUSAN ROHAN, MAYOR

ATTEST:

_____

SONIA OROZCO, CITY CLERK
CITY OF ROSEVILLE, CALIFORNIA

COUNCIL COMMUNICATION

CC #: 8305
File #: 0102-06

Title: Proclamation - Keaton Raphael Memorial St. Baldrick's Foundation
Contact: Heather Blanco 916-774-5265 hblanco@roseville.ca.us

Meeting Date: 3/1/2017
Item #: 6.17.

RECOMMENDATION TO COUNCIL

Proclaim March 4, 2017 as Keaton Raphael Memorial, St. Baldrick's Foundation Head Shaving Event and urge citizens to support organizations that offer assistance and services to children diagnosed with cancer, and their families.

BACKGROUND

Not Applicable

FISCAL IMPACT

Not Applicable

ECONOMIC DEVELOPMENT / JOBS CREATED

Not Applicable

ENVIRONMENTAL REVIEW

Not Applicable

Respectfully Submitted,

Heather Blanco, Deputy City Clerk

Sonia Orozco, City Clerk

Rob Jensen, City Manager

ATTACHMENTS:

Description

Proclamation - Keaton Raphael Memorial

City of Roseville
Proclamation

KEATON RAPHAEL MEMORIAL
ST. BALDRICK'S FOUNDATION
HEAD SHAVING EVENT
March 4, 2017

WHEREAS, Keaton Raphael Memorial is a community based nonprofit organization established in 1998 following the death of five-year old Keaton after his courageous battle with Neuroblastoma and this foundation serves as a positive living legacy for children and families battling cancer; and

WHEREAS, the St. Baldrick's Foundation was created in 2004 as a volunteer-driven effort to raise funds and awareness for childhood cancer research; and

WHEREAS, Keaton Raphael Memorial partnered with St. Baldrick's Foundation 15 years ago to host the Head Shaving Extravaganza to raise money for this worthy cause; and

WHEREAS, with the support of the communities through Keaton Raphael Memorial's head shaving events, over $500,000 has been raised annuallly and over $6 million dollars raised the past 15 years; and

WHEREAS, Keaton Raphael Memorial is proud to be hosting the 2017 St. Baldrick's Foundation Head Shaving Event at the Westfield Galleria Mall, where in solidarity with children battling cancer, "Heroes" will get their heads shaved by the talented Supercuts team; and

NOW, THEREFORE, I, SUSAN ROHAN, MAYOR OF THE CITY OF ROSEVILLE, CALIFORNIA, on behalf of the City Council, do hereby proclaim March 4, 2017 as **KEATON RAPHAEL MEMORIAL, ST. BALDRICK'S FOUNDATION HEAD SHAVING EVENT** and urge citizens to support organizations that offer assistance and services to children diagnosed with cancer, and their families.

SIGNED AND APPROVED this 1st day of March, 2017.

SUSAN ROHAN, MAYOR

ATTEST:

SONIA OROZCO, CITY CLERK
CITY OF ROSEVILLE, CALIFORNIA

COUNCIL COMMUNICATION

CC #: 8306
File #: 0102-10

Title: Resolution of Commendation and Appreciation to Sheriff Edward N Bonner
Contact: Heather Blanco 916-774-5265 hblanco@roseville.ca.us

Meeting Date: 3/1/2017
Item #: 6.18.

RECOMMENDATION TO COUNCIL

Recommend Sheriff Edward N. Bonner be commended for his outstanding service and dedication to the City of Roseville and Placer County, congratulated for his many accomplishments, and wished a long, healthy, and enjoyable retirement.

BACKGROUND

Not Applicable

FISCAL IMPACT

Not Applicable

ECONOMIC DEVELOPMENT / JOBS CREATED

Not Applicable

ENVIRONMENTAL REVIEW

Not Applicable

Respectfully Submitted,

Heather Blanco, Deputy City Clerk

Sonia Orozco, City Clerk

_____

Rob Jensen, City Manager

ATTACHMENTS:

Description

Resolution of Commendation and Appreciation to Sheriff Edward N. Bonner

City of Roseville
RESOLUTION
of
COMMENDATION AND APPRECIATION

WHEREAS, Sheriff Edward N. Bonner began his law enforcement career with the Placer County Sheriff's Office in 1974 and assumed the Office of Sheriff in 1994; and

WHEREAS, Sheriff Bonner encouraged countywide partnerships with the Roseville Police Department and other law enforcement and criminal justice agencies to form task forces and share information which benefits all citizens in Placer County; and

WHEREAS, Sheriff Bonner was instrumental in collaborating with all Placer County law enforcement agencies to implement annual training after the 1995 death of Roseville Police Officer, Mark A. White to help keep officers safe; and

WHEREAS, Sheriff Bonner encouraged all Placer County law enforcement agencies to set an example of "Good behavior among local governments," to work together without competition or rancor, for the benefit of the community; and

WHEREAS, Sheriff Bonner has served on the Executive Council of the Placer Law Enforcement Agencies (PLEA) to coordinate the efforts and activities of the law enforcement agencies within the County of Placer to discuss and find solutions for common problems; and

WHEREAS, Sheriff Bonner has been a leader, friend, and mentor to Placer County law enforcement agencies, including the five Roseville Police Chiefs who have served with him during his tenure, garnering respect for his unquestioned integrity, ethics, and compassion; and

NOW, THEREFORE, BE IT RESOLVED BY THE COUNCIL OF THE CITY OF ROSEVILLE, CALIFORNIA, that **SHERIFF EDWARD N. BONNER** be commended for his outstanding service and dedication to the City of Roseville and Placer County, congratulated for his many accomplishments, and wished a long, healthy, and enjoyable retirement.

SIGNED AND APPROVED this 1st day of March, 2017.

SUSAN ROHAN, MAYOR

ATTEST:

SONIA OROZCO, CITY CLERK
CITY OF ROSEVILLE, CALIFORNIA

COUNCIL COMMUNICATION

CC #: 8299
File #: 0206-03 & 0201-01

Title:	Community Facilities Districts True-Up to Levies - Budget Adjustment
Contact:	Vanessa Lieberman 916-774-5189 vlieberman@roseville.ca.us

Meeting Date: 3/1/2017
Item #: 7.1.

RECOMMENDATION TO COUNCIL

The Finance Department recommends the City Council approve the attached Ordinance authorizing the attached budget adjustment.

BACKGROUND

After a review of all the City's Community Facility District's (CFD) and Landscaping and Lighting District's (LLD) fiscal year 2017 budgets, multiple items were identified as needing adjustments to true-up to the fiscal year 2017 levies that were submitted to Placer County (County). These adjustments include:

- Increasing the County administration fees
- Willdan consulting fees and contract maintenance fees
- Adding the Cost of Issuance fees for the refunding of Fiddyment Ranch CFD 1
- Adding the transfer of pay as you go (PAYGO) funds collected via the County tax levy and the developer payment for Westpark CFD 1 Improvement Fund
- Adding funds for accident damage repair and installing new streetscape signage for the Riverside Avenue LLD
- Adding funds to maintain district irrigation for the North Roseville CFD 2 Services District Zone E
- Adding funds for unplanned critical tree work in the Fiddyment Ranch CFD 2 Services District in order to mitigate risk and liability
- Adding funds to complete landscape maintenance due to increased development in Stoneridge CFD 1 Services District
- Adding funds to upgrade lighting and signage archways on Vernon Street in the Vernon Street LLD.

FISCAL IMPACT

There are sufficient fund balances in all the identified CFDs and LLDs to accommodate these requests. There is no impact to the City's General Fund.

ECONOMIC DEVELOPMENT / JOBS CREATED

N/A

ENVIRONMENTAL REVIEW

This is not considered a “project” as defined by the California Environmental Quality Act (CEQA), Section 15273 of the CEQA guidelines and therefore no CEQA action is required.

Respectfully Submitted,

Vanessa Lieberman, Financial Analyst

Jay Panzica, Chief Financial Officer/Treasurer

_____
Rob Jensen, City Manager

ATTACHMENTS:

Description

Ordinance No. 5809

Signed Budget Adjustment

ORDINANCE NO. 5809

ORDINANCE OF THE COUNCIL OF THE CITY OF ROSEVILLE AUTHORIZING CERTAIN AMENDMENTS TO THE 2016-17 BUDGET AND DECLARING THIS ORDINANCE TO BE IMMEDIATELY EFFECTIVE AS AN APPROPRIATION MEASURE

THE CITY OF ROSEVILLE ORDAINS:

SECTION 1. The City of Roseville Annual Budget, Fiscal Year 2016-17, is hereby amended by transferring appropriation to and from the activities indicated below:

Appropriate funds for Community Facility Districts and Landscaping and Lighting Districts adjustments (as shown on Attachment A) per the request of the Finance Department as listed on the attached Request for Budget Adjustment in the amount of $1,334,143.00.

SECTION 2. This ordinance is hereby declared to be an appropriation measure, immediately effective pursuant to the provisions of Section 5.03 of the Charter.

SECTION 3. The City Clerk is hereby authorized and directed to post a true copy of the foregoing ordinance in each of three (3) conspicuous locations in the City and she shall immediately after such posting enter in the ordinance book, under the record of the ordinance, a certificate under her hand stating the time and place of such publication by posting.

PASSED AND ADOPTED by the Council of the City of Roseville, this _____ day of _____, 20__, by the following vote on roll call:

AYES COUNCILMEMBERS:

NOES COUNCILMEMBERS:

ABSENT COUNCILMEMBERS:

_____
MAYOR

ATTEST:

_____
City Clerk

CITY OF ROSEVILLE CALIFORNIA

REQUEST FOR BUDGET ADJUSTMENT

FINANCE DEPARTMENT

Instructions: Complete all necessary fields. Fields marked with an asterisk (*) are mandatory and required for processing. Obtain required approvals and process according to the procedure outlined in: A.R. 6.01 Budget Adjustment Policy & Procedure.

For more detailed budget adjustment training information, including examples, please click on the following link: Miscellaneous Budget Training Information.

REQUESTER*: Vanessa Lieberman

DEPARTMENT/DIVISION*: Finance/Accounting

FISCAL YEAR/EFFECTIVE DATE*: FY2017

PROPOSED COUNCIL DATE (if applicable): 03/01/2017

USE OF FUNDS*

AMOUNT*	ACCOUNT NUMBER GL ORG KEY*	GL OBJECT*	GL FUND*	JL PROJECT	JL ACTIVITY	Account Title/Activity Description*
1,334,143						Please see attached excel listing
$ 1,334,143	TOTAL					

SOURCE OF FUNDS*

AMOUNT*	ACCOUNT NUMBER GL ORG KEY	GL OBJECT	GL FUND*	JL PROJECT	JL ACTIVITY	Account Title/Activity Description*
1,334,143						Please see attached excel listing
$ 1,334,143	TOTAL					

FINANCE USE Approved: Nancy Huffstutler 2/8/17
BUDGET MANAGER/DESIGNEE DATE

Finance Director: Martha Hall
Date

Justification for Budget Adjustment*:

This budget adjustment is to true up the submitted FY2017 County Levy budgets to the City budgets that are submitted prior to finalizing the County Levies. The budget for the transfer of Pay as You Go monies collected via the levy and the subsequent payment to the developer for infrastructure reimbursement in the Westpark Community Facilities District (CFD) was not finalized until June 2016. Additional funds are being requested by our Parks division for unplanned and critical repairs and improvements that need to be made in our Services districts and our Landscaping and Lighting Districts (LLDs). The remaining entries are minor adjustments to consulting fees, County Admin fees and contract maintenance fees.

Approved: Martha Hall
REQUESTING DEPARTMENT HEAD / DESIGNEE DATE

Approved:
CITY MANAGER DATE

Revised 6/2016

DATE OF PROPOSED COUNCIL ACTION: **3/1/2017**

USE OF FUNDS

AMOUNT	GL ORG KEY	GL OBJECT	GL FUND	JL PROJECT	JL ACT.	ACCOUNT TITLE/ACTIVITY DESCRIPTION
$ 4,000	00731	8144	700			Westbrook CFD #1/County Admin Fees
$ 500	00730	8145	700			Automall CFD #1/Consulting Fees
$ 2,000	00743	8145	700			North Central CFD #1/Consulting Fees
$ 2,000	00744	8145	700			North Roseville CFD #1/Consulting Fees
$ 50	00748	8145	700			Crocker Ranch CFD #1/Consulting Fees
$ 1,000	00749	8145	700			Woodcreek East CFD #1/Consulting Fees
$ 3,000	00753	8144	700			Westpark CFD #1/County Admin Fees
$ 45,000	00754	8130	700			Fiddyment Ranch CFD #1/Cost of Issuance Fees
$ 450	00754	8144	700			Fiddyment Ranch CFD #1/County Admin Fees
$ 20	00758	8144	700			Diamond Creek CFD #1/County Admin Fees
$ 569,000	00350	3900	300	700753	94	Westpark CFD #1/PAYGO Transfer
$ 569,000	00350	6130	300			Westpark CFD #1/PAYGO Developer Payment
$ 2,500	00777	5701	200			Municipal Services CFD 3/County Admin Fees
$ 40	00690	5701	200			North Central LLD Zone B/County Admin Fees
$ 80	00680	5700	200			Olympus Pointe LLD Zone A/Consutling Fees
$ 10	00681	5700	200			Olympus Pointe LLD Zone D/Consulting Fees
$ 20	00681	5701	200			Olympus Pointe LLD Zone D/County Admin Fees
$ 510	00682	5700	200			North West LLD Zone A/Consulting Fees
$ 20	00683	5700	200			North West LLD Zone B/Consulting Fees
$ 40	00684	5700	200			Johnson Ranch LLD Zone A/Consulting Fees
$ 30	00685	5700	200			Johnson Ranch LLD Zone B/Consulting Fees
$ 30	00686	5700	200			Johnson Ranch LLD Zone C/Consulting Fees
$ 40	00688	5700	200			Johnson Ranch LLD Zone E/Consulting Fees
$ 3	00688	5701	200			Johnson Ranch LLD Zone E/County Admin Fees
$ 300	00689	5700	200			North Central LLD Zone A/Consulting Fees
$ 100	00689	5701	200			North Central LLD Zone A/County Admin Fees
$ 200	00690	5700	200			North Central LLD Zone B/Consulting Fees
$ 40	00690	5701	200			North Central LLD Zone B/County Admin Fees
$ 40	00691	5700	200			North Central LLD Zone F/Consulting Fees
$ 30	00692	5700	200			North Central LLD Zone G/Consulting Fees
$ 50	00693	5700	200			Infill LLD Zone A/Consulting Fees
$ 40	00694	5700	200			Infill LLD Zone B/Consulting Fees
$ 85	00694	5701	200			Infill LLD Zone B/County Admin Fees
$ 40	00695	5700	200			Infill LLD Zone C/Consulting Fees
$ 35	00695	5701	200			Infill LLD Zone C/County Admin Fees
$ 75	00772	5700	200			Vernon St LLD/Consulting Fees
$ 25	00772	5701	200			Vernon St LLD/County Admin Fees
$ 75	00720	5700	200			Historic District LLD/Consulting Fees
$ 60	00721	5700	200			Riverside LLD/Consulting Fees
$ 15	00721	5701	200			Riverside LLD/County Admin Fees
$ 50	00779	5701	200			Infill SD/County Admin Fees
$ 40	00723	5701	200			Infill CFD 4/County Admin Fees
$ 700	00725	5701	200			Westbrook CFD #2/County Admin Fees
$ 34,000	00725	5102	200			Westbrook CFD #2/Contract Maintenance
$ 5,000	00725	5341	200			Westbrook CFD #2/Landscape Maintenance
$ 200	00767	5701	200			Stoneridge CFD #1 SD/County Admin Fees
$ 700	00771	5701	200			Highland Reserve North SD/County Admin Fees
$ 100	00773	5701	200			Woodcreek East SD/County Admin Fees
$ 1,500	00776	5701	200			Fiddyment Ranch CFD #2/County Admin Fees
$ 21,000	00776	5102	200			Fiddyment Ranch CFD #2/Contract Maintenance
$ 100	00778	5701	200			Longmeadow CFD #2/County Admin Fees
$ 15,000	00721	5961	200			Repair damaged from accident
$ 1,600	00721	5961	200			Install new banner and hardware for streetscape signage
$ 3,000	00699	5961	200			Maintain district irrigation
$ 18,000	00776	5961	200			Unplanned, critical tree work to mitigate risk and liability
$ 22,600	00767	5961	200			Landscape maintenance due to increased development
$ 10,000	00772	5961	200			Upgrade lighting and signage archways on Vernon Street

1,334,143.00	**TOTAL**

SOURCE OF FUNDS

AMOUNT	GL ORG KEY	GL OBJECT	GL FUND	JL PROJECT	JL ACT.	ACCOUNT TITLE/ACTIVITY DESCRIPTION
$ 4,000	00731		700			Available Resources
$ 500	00730		700			Available Resources
$ 2,000	00743		700			Available Resources
$ 2,000	00744		700			Available Resources
$ 50	00748		700			Available Resources
$ 1,000	00749		700			Available Resources
$ 3,000	00753		700			Available Resources
$ 45,000	00754		700			Available Resources
$ 450	00754		700			Available Resources
$ 20	00758		700			Available Resources
$ 569,000	00753	8900	700	700350	95	Incoming Tax Levy PAYGO Funds
$ 569,000	00350		300			Available Resources
$ 2,500	00777		200			Available Resources
$ 40	00690		200			Available Resources
$ 80	00680		200			Available Resources
$ 10	00681		200			Available Resources
$ 20	00681		200			Available Resources
$ 510	00682		200			Available Resources
$ 20	00683		200			Available Resources
$ 40	00684		200			Available Resources
$ 30	00685		200			Available Resources
$ 30	00686		200			Available Resources
$ 40	00688		200			Available Resources
$ 3	00688		200			Available Resources
$ 300	00689		200			Available Resources
$ 100	00689		200			Available Resources
$ 200	00690		200			Available Resources
$ 40	00690		200			Available Resources
$ 40	00691		200			Available Resources
$ 30	00692		200			Available Resources
$ 50	00693		200			Available Resources
$ 40	00694		200			Available Resources
$ 85	00694		200			Available Resources
$ 40	00695		200			Available Resources
$ 35	00695		200			Available Resources
$ 75	00772		200			Available Resources
$ 25	00772		200			Available Resources
$ 75	00720		200			Available Resources
$ 60	00721		200			Available Resources
$ 15	00721		200			Available Resources
$ 50	00779		200			Available Resources
$ 40	00723		200			Available Resources
$ 700	00725		200			Available Resources
$ 34,000	00725		200			Available Resources
$ 5,000	00725		200			Available Resources
$ 200	00767		200			Available Resources
$ 700	00771		200			Available Resources
$ 100	00773		200			Available Resources
$ 1,500	00776		200			Available Resources
$ 21,000	00776		200			Available Resources
$ 100	00778		200			Available Resources
$ 15,000	00721		200			Available Resources
$ 1,600	00721		200			Available Resources
$ 3,000	00699		200			Available Resources
$ 18,000	00776		200			Available Resources
$ 22,600	00767		200			Available Resources
$ 10,000	00772		200			Available Resources

1,334,143.00	**TOTAL**

COUNCIL COMMUNICATION

CC#: 8292
File#: 0202-02

Title: Midyear Performance Report
Contact: Kathy Cullen 916-746-1306 kcullen@roseville.ca.us

Meeting Date: 3/1/2017
Item #: 8.1.

RECOMMENDATION TO COUNCIL

This is an informational item and requires no Council action.

BACKGROUND

BACKGROUND
This is a new report that was created to provide Council with brief and useful information highlighting the year-to-date (YTD) fiscal performance of the City of Roseville. Staff intends to provide this report on a quarterly basis.
This five-page report includes a series of tables and charts displaying financial data for the first two quarters of FY2016-17 for 1) the General Fund, 2) the major enterprise operating funds, and 3) other selected revenue sources. Each page includes a table with three columns of numbers as follows:
Column 1: YTD (midyear) actuals for FY2015-16
Column 2: YTD (midyear) actuals for FY2016-17
Column 3: Revised (midyear) budget for FY2016-17
YTD information for two consecutive years is provided to show how the City is performing compared to the previous year. The revised midyear budget is provided to reflect all the changes in revenue estimates and program costs that have been approved through the budget adjustment process since budget adoption. In addition, each page also includes several charts that illustrate selected data points we believe will be helpful to Council.
The notes in each section provide an explanation of significant variances that occurred versus the previous year or versus the budget. As an example, revenues and expenditures do not necessarily flow smoothly over the course of the year—this volatility is often responsible for apparent swings in midyear data and will be explained in the narrative.

General Fund Revenue
The first page of the report displays YTD operating revenues and transfers in for the General Fund. This total was $38.6 million for the first six months of this fiscal year versus $33.3 million for the same period in the prior fiscal year. This is mostly due to an increase in sales tax receipts and an increase in plan check fees. The increase in sales tax does not reflect an actual trend: the sunset of the "triple flip" (property tax in lieu of sales tax) has created a one-time accelerated

cash flow for this revenue resulting in the City receiving more sales tax earlier in the fiscal year than in prior years. As a result, it appears that sales tax revenue has significantly increased from the prior year, when in reality, the variance will smooth out over the remainder of this fiscal year. Unfortunately, after discussions with our sales tax consultant regarding the slow-down in retail sales in the City, we reduced our budget for FY2016-17 sales tax by $1.5 million.
FY2016-17General Fund operating revenue is now forecast at $142.7 million. This amount includes the prior year operating carryover of $1.3 million as revenue since it represents the reserve set aside to cover the encumbrance carryforward expenses from FY2015-16.

General Fund Expenditures
The second page of the report displays YTD General Fund operating expenditures and transfers out. In total, the General Fund departments included in the chart have spent nearly $900,000 less on a YTD basis as compared to last year due to conservative spending practices. Fire Department spending increased approximately $640,000 for the first six months of FY2016-17 versus the same timeframe during last fiscal year due largely to strike team expenditures that will be reimbursed by the end of this fiscal year.
Total estimated General Fund operating revenue at midyear is $142.7 million while total estimated operating expenditures are $140.3 million. These numbers will be very similar to each other when non-operating income and expenses are factored in, resulting in a break even forecast for the General Fund.

Enterprise Funds: Operating Revenue
The third page of the report displays YTD operating revenues for the Enterprise Funds. Roseville Electric's YTD revenue for the first six months of this fiscal year was $78.6 million versus $81.3 million for the same period last year. This variance is primarily due to the reclassification of two revenues (contribution in aid of construction and electric backbone fees) from operating to capital, accounting for about $1.3 million, and the elimination of the hydroelectric surcharge in FY2016-17, which was $1.1 million through midyear FY2015-16.
Water Operations revenue for the first six months of FY2016-17 was $3 million higher than for the same period in FY2015-16 due to a water rate adjustment and an increase in usage.
Wastewater revenue is slightly more than $9 million higher from July to December 2016 than it was for the first six months of the prior fiscal year. This is primarily due to the timing of the receipt of reimbursed wastewater costs from South Placer Wastewater Authority. Although Wastewater Operating Revenues are significantly higher year-to-date this year than last, they are expected to smooth out over the remainder of the year and end the year at the midyear budget estimate.
Operating revenue for Golf Course Operations was approximately $200,000 less for the first six months of FY2016-17 than for the same timeframe in FY2015-16 because of fewer rounds being played due to weather. Our golf courses are also experiencing increased competition.
The first six months of FY2016-17 yielded $1.2 million more in revenue for the Youth Development program than was received for the same period in FY2015-16 due to increases in rates and participation.
Operating revenues for the Solid Waste and Local Transportation funds were within an expected range this year based on last year's actuals.

Enterprise Funds: Operating Expenditures
Page 4 shows the changes in operating expenditures for the enterprise operations funds. Solid Waste operating expenditures were $1.4 million lower in the first six months of FY2016-17 than for the same period in FY2015-16 as a result of an accounting change in the timing of vehicle replacement and usage charges. These expenses will catch up by the end of the year and are expected to end the year at the midyear budget estimate.
Operating expenditures for the Youth Development programs were approximately $530,000

higher at FY2016-17 midyear than the prior midyear due to increased costs brought on by increased participation and mandated minimum wage increases for temporary labor.
The Electric, Water, Wastewater, Local Transportation, and Golf Course operations funds were within an expected range of expenditures based on last year's actuals.

Other Revenue
The fifth page of the report presents the operating revenue of the Fire Facilities Tax Fund, Strategic Improvement Fund, and Public Facilities Fund. Revenue in the Public Facilities Fund increased by approximately $180,000 due to an increase in the Public Facilities Fee as of July 1, 2016 that resulted from an update to the public facilities nexus study. Operating revenue in the Fire Facilities Tax Fund and the Strategic Improvement Fund were within an expected range of revenues based on last year's YTD actuals.
In May, staff anticipates providing a similar update that includes results for the end of the third quarter of FY2016-17, at which time a draft of the FY2017-18 proposed budget will also be available.

FISCAL IMPACT

This item is a performance report only and has no fiscal impact.

ECONOMIC DEVELOPMENT / JOBS CREATED

This item is not connected to any new job creation.

ENVIRONMENTAL REVIEW

The Midyear Performance Report is not considered a "project" as defined by the California Environmental Quality Act (CEQA) (CEQA Guidelines §15378); consequently, no CEQA action is required.

Respectfully Submitted,

Kathy Cullen, Budget Manager

Jay Panzica, Chief Financial Officer

_____
Rob Jensen, City Manager

ATTACHMENTS:
Description

General Fund: Operating Revenue & Transfers In

FY2016-17 Midyear

July 1, 2016 - December 31, 2016

	Midyear actual		Midyear budget
	FY2015-16	FY2016-17	FY2016-17
Sales Tax	$ 12,278,909	$ 16,716,109	$ 51,871,200
Property Tax	592,468	763,236	40,421,460
Parks, Recreation & Libraries Programs	1,940,652	1,999,141	4,178,358
Building Permits	1,002,236	1,057,733	1,888,300
Plan Check Fees	994,679	1,413,367	1,812,524
Engineering Inspection Fees	32,195	28,444	106,785
Grants	177,454	21,660	390,294
Other Revenue	5,277,039	5,736,927	15,919,496
Operating Transfers	195,893	400,216	3,786,925
Franchise Fee Transfers	3,568,510	3,787,257	7,574,514
Indirect Cost	7,248,532	6,716,975	13,433,950
Prior Year Operating Carryover	0	0	1,346,141
Total:	**$ 33,308,567**	**$ 38,641,065**	**$ 142,729,947**

Comparisons:

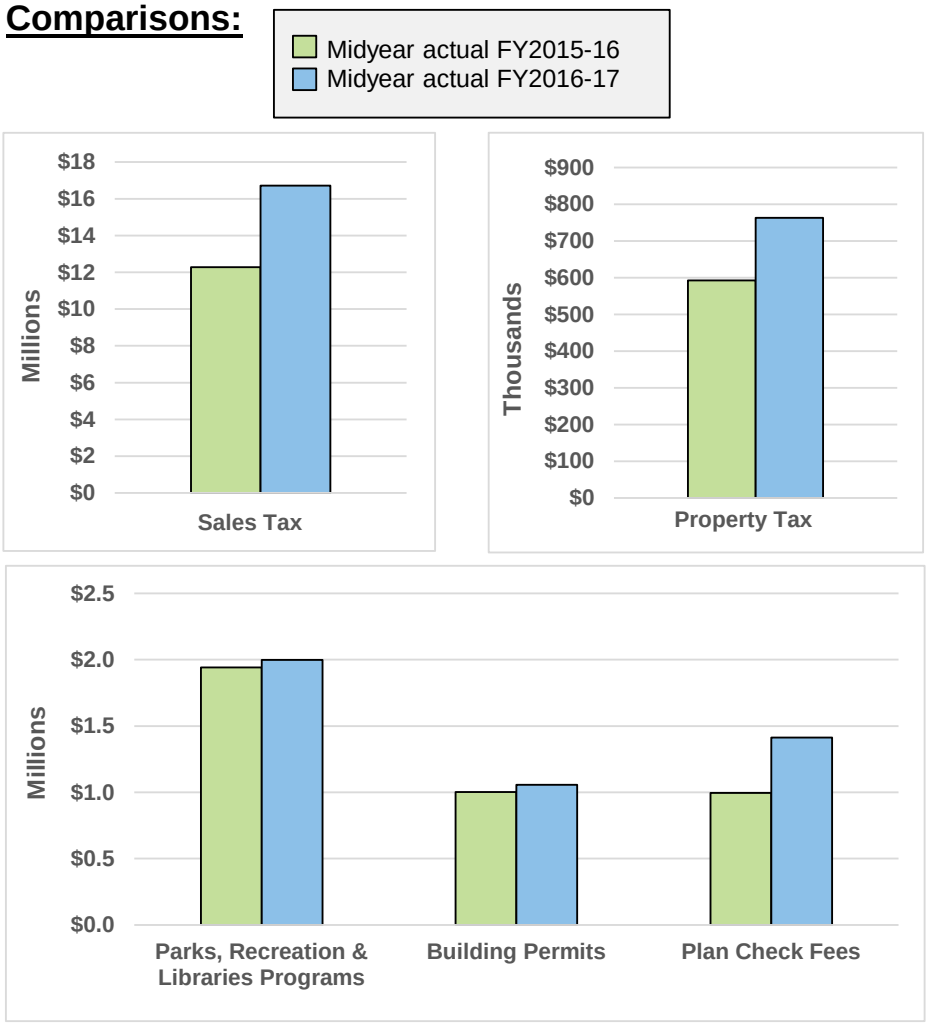

Notes:

~ The increase in sales tax from FY2015-16 to FY2016-17 does not show an accurate trend. The sunset of the "Triple Flip" (property tax in lieu of sales tax) has created an accelerated cash flow for this revenue--the City now receives more sales tax earlier in the fiscal year than in prior years. As a result, it appears that sales tax revenue has increased drastically from the prior year, but it will smooth out over the remainder of FY2016-17.

~ The FY2017 budget for sales tax was reduced by $1.5 million at midyear per our consultant (MuniServices).

~ Indirect cost (payments from the enterprise funds for General Fund services) seems as if it's significantly lower than the prior year, but this is due to a change in the methodology for making these transfers.

~ Please note that this report does not include non-operating revenue.

General Fund: Operating Expenditures & Transfers Out

FY2016-17 Midyear

July 1, 2016 - December 31, 2016

	Midyear actual		Midyear budget
	FY2015-16	FY2016-17	FY2016-17
General Government	$ 13,213,165	$ 12,842,031	$ 29,042,090
Economic Development & Housing	662,091	568,039	841,814
Development Services	3,717,439	3,803,059	8,348,490
Public Works	3,343,869	3,177,174	6,933,987
Police	17,717,630	17,029,287	36,044,813
Fire	14,462,268	15,104,163	27,934,801
Parks, Recreation & Libraries	9,766,380	9,463,563	20,112,496
Annexation Payments	187,576	216,938	4,300,000
City Special Assessments	1,594	66,480	84,560
Post-Retirement Transfer	2,092,190	2,702,048	4,497,090
Other Operating Transfers	277,571	333,582	844,155
General Fund Contingency	0	0	1,328,859
Total:	**$ 65,441,773**	**$ 65,306,364**	**$ 140,313,155**

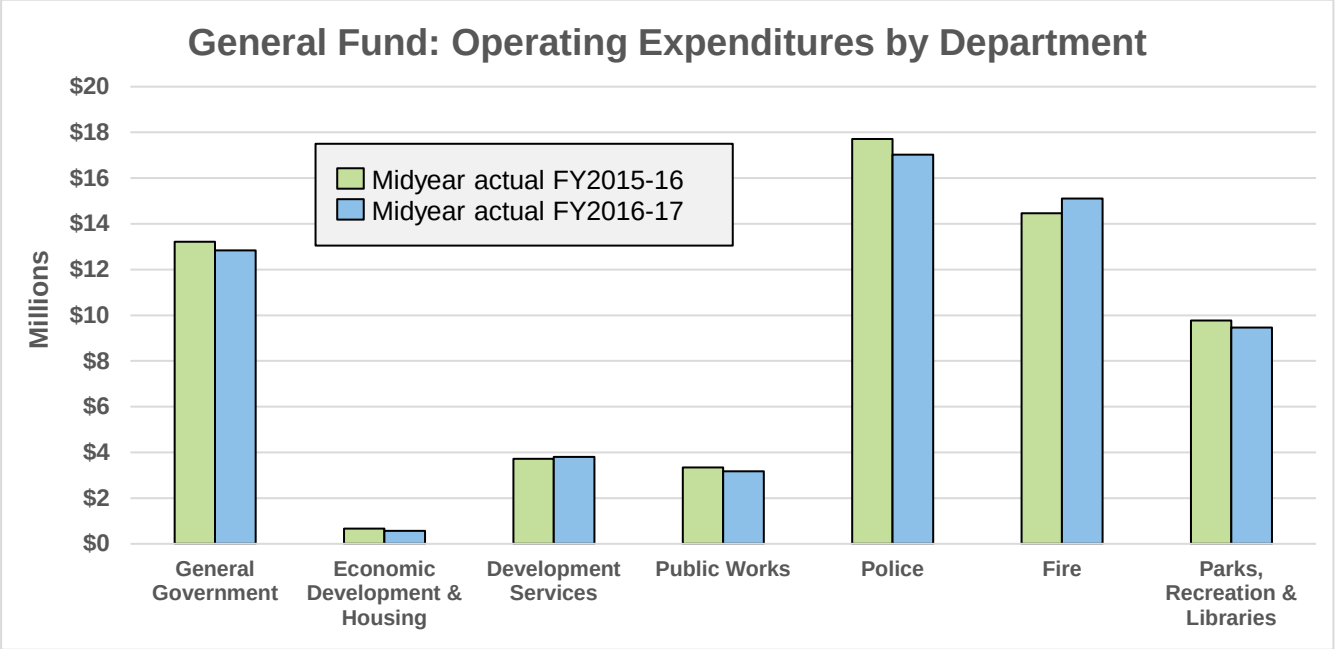

Notes:

~ In total, the General Fund departments (those included on the bar chart above) have spent nearly $900,000 less from 7/1/2016 through 12/31/2016 than they spent during the same six-month period in the last fiscal year.

~ The apparent increase in Fire's spending at this midyear compared to last is in large part due to strike team expenditures that will be reimbursed by the end of the fiscal year.

~ Please note that this report does not include non-operating revenue.

Enterprise Funds: Operating Revenue

FY2016-17 Midyear

July 1, 2016 - December 31, 2016

	Midyear actual		Midyear budget
	FY2015-16	FY2016-17	FY2016-17
Electric Operations	$ 81,328,239	$ 78,559,173	$ 162,831,394
Water Operations	$ 9,804,271	$ 12,850,620	$ 25,810,595
Wastewater Operations	$ 11,466,055	$ 20,525,438	$ 34,516,476
Solid Waste Operations	$ 10,142,049	$ 10,338,412	$ 21,889,767
Local Transportation	$ 615,642	$ 701,234	$ 11,260,633
Golf Course Operations	$ 991,341	$ 781,946	$ 2,390,000
Youth Development	$ 2,000,976	$ 3,247,194	$ 5,428,445

Comparisons:

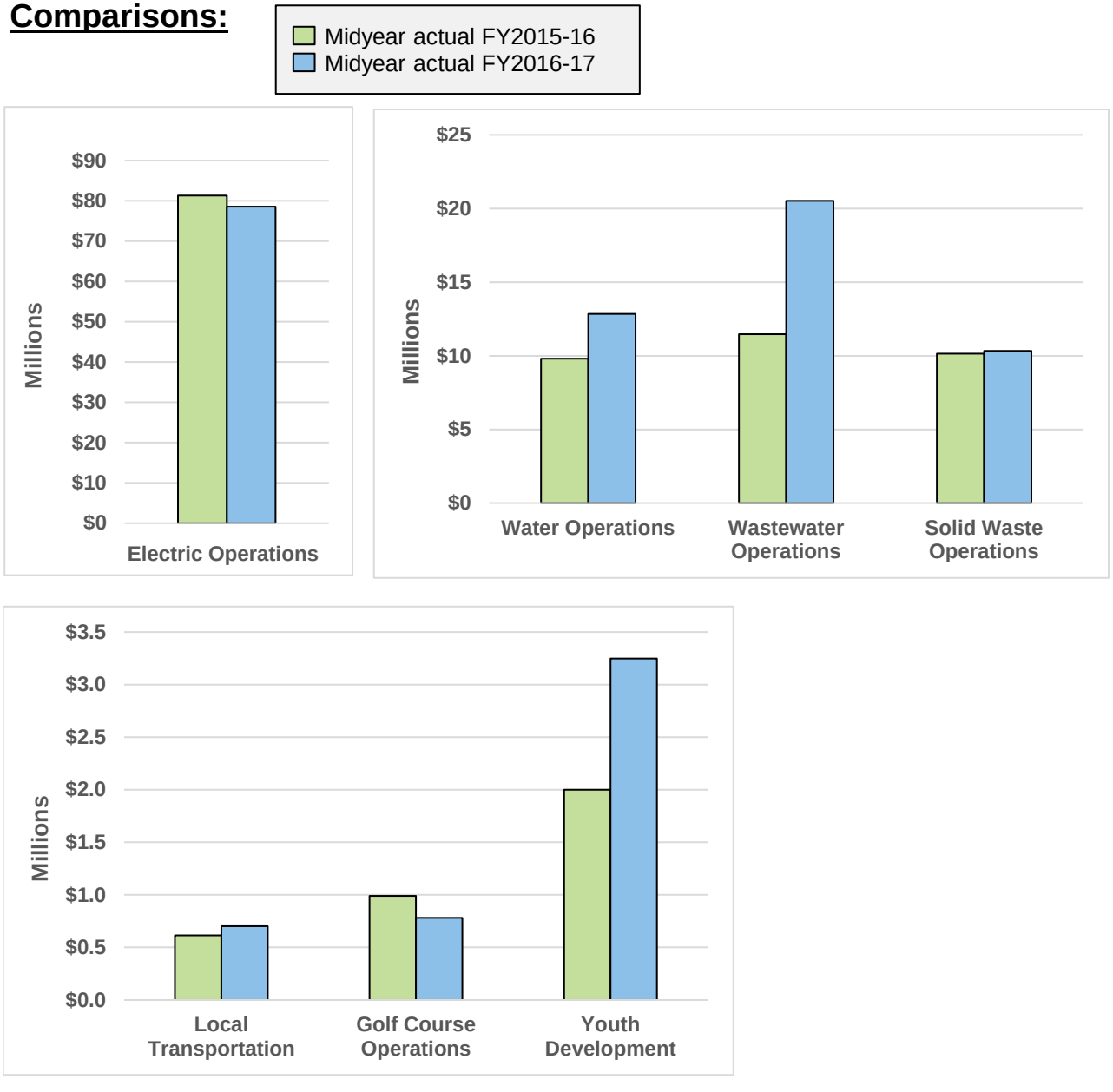

Enterprise Funds: Operating Expenditures

FY2016-17 Midyear

July 1, 2016 - December 31, 2016

	Midyear actual		Midyear budget
	FY2015-16	FY2016-17	FY2016-17
Electric Operations	$ 50,831,301	$ 51,439,547	$ 118,118,612
Water Operations	$ 6,869,300	$ 6,350,811	$ 18,339,770
Wastewater Operations	$ 9,121,830	$ 8,547,605	$ 23,632,602
Solid Waste Operations	$ 9,439,734	$ 8,027,768	$ 19,845,634
Local Transportation	$ 3,044,805	$ 2,812,703	$ 6,662,312
Golf Course Operations	$ 1,193,053	$ 1,212,543	$ 2,500,611
Youth Development	$ 1,916,251	$ 2,450,861	$ 5,530,741

Comparisons:

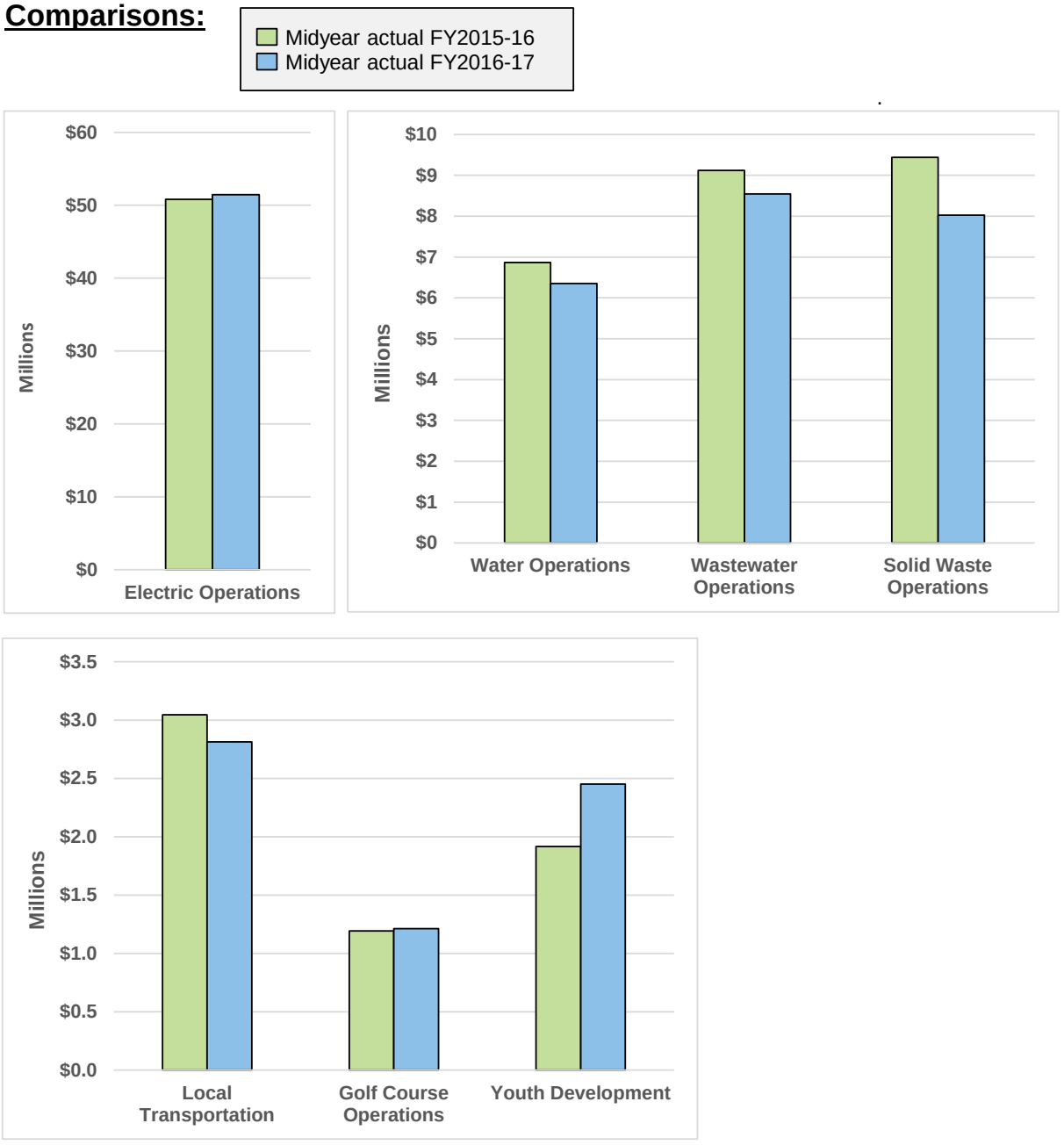

Other Revenue
FY2016-17 Midyear
July 1, 2016 - December 31, 2016

	Midyear actual		Midyear budget
	FY2015-16	FY2016-17	FY2016-17
Fire Facilities Tax Fund	$ 236,381	$ 303,560	$ 1,303,328
Strategic Improvement Fund	$ 235,500	$ 254,194	$ 996,466
Public Facilities Fund	$ 481,730	$ 665,184	$ 2,102,650

Comparisons:

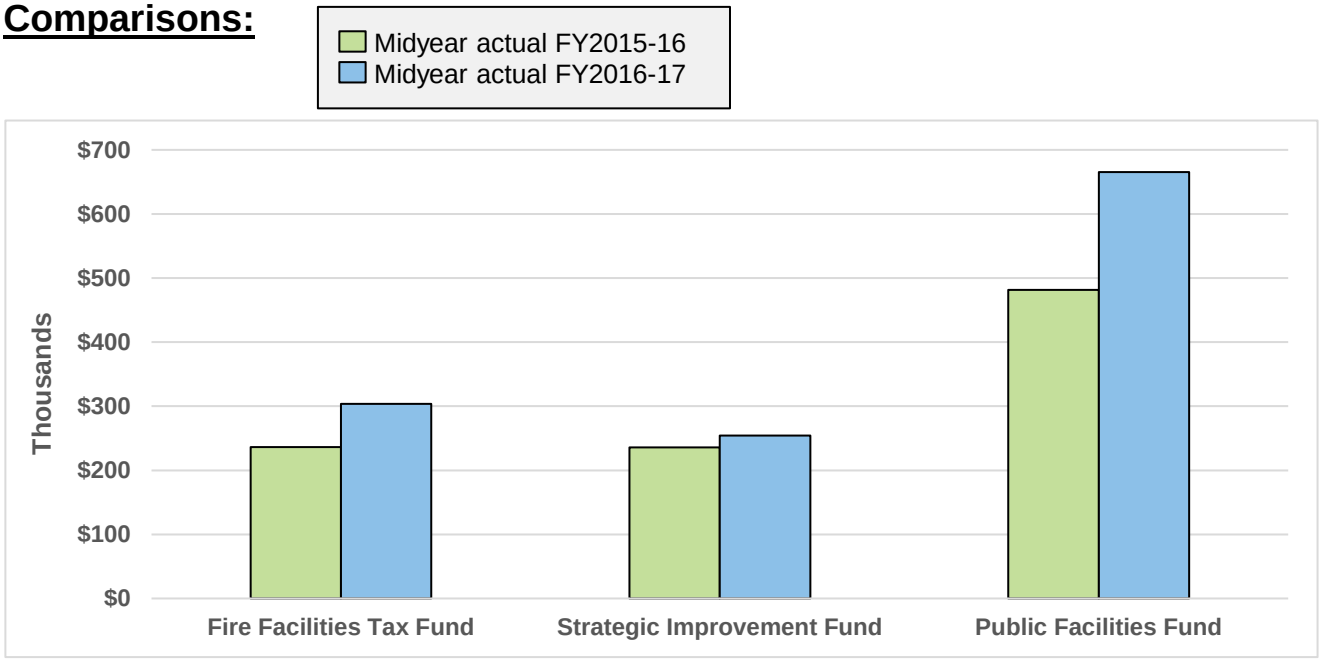

Projected ending fund balance as of 6/30/2017:

~ Fire Facilities Tax Fund	$ 1,000,000
~ Strategic Improvement Fund	$ 3,800,000
~ Public Facilities Fund	$ 5,700,000