AGENDA

August 21, 2024

CITY COUNCIL
6:00 p.m.
Council Chambers
311 Vernon Street
Roseville, CA
www.roseville.ca.us

THE CITY OF ROSEVILLE WELCOMES YOUR PARTICIPATION

If an agenda item is open to public comment, such public comment shall be addressed to the chair of the meeting.

Public Comment - Speakers have three minutes under Public Comment to speak on issues that are not listed on the agenda and are within the City's jurisdiction. The Brown Act does not permit any action or discussion on items not listed on the agenda.

Consent Calendar - If applicable, the Consent Calendar consists of routine items that may be approved by one motion. Any person can remove an item from the Consent Calendar to be discussed separately.

Agenda Items - Speakers have five minutes to address items that are listed on the agenda.

Levine Act Provisions - The Levine Act requires a Party (or its agent (s)) to a Proceeding before the City of Roseville that involves any action or consideration to their contract, license, permit, or other entitlement for use, to disclose any campaign contribution made to City elected or appointed officers (including Councilmembers, Planning Commissioners, and members of other City boards and commissions) totaling more than $250 within the 12 months before the City decision.

Americans with Disabilities Act - Notify the City Clerk or Secretary at least 72 hours in advance if special assistance is required to participate in a meeting including the need of auxiliary aids or services.

Audio/Visual Presentations - If making a presentation regarding an agenda item, audio/visual materials must be submitted to the City Clerk or Secretary at least 72 hours in advance.

Security procedures are in place to attend Roseville City Council meetings. All attendees must successfully pass through a security metal detector. Any person with a prohibited item will not be allowed entry. Prohibited items include, but are not limited to: firearms (even with valid CCW), knives, pepper spray/mace, explosives of any kind/ any weapons and/or dangerous devices of

any kind, illegal drugs and alcohol.

1. CALL TO ORDER

2. ROLL CALL

3. PLEDGE OF ALLEGIANCE

4. MEETING PROCEDURES

5. PRESENTATIONS

5.1. Resolution - 2024 Sylvia Besana Community Volunteer Award

Commend Cathy SooHoo as the recipient of the City of Roseville 2024 Sylvia Besana Community Volunteer Award.

CONTACT: Blair Hutchison 916-774-5266 bmhutchison@roseville.ca.us

6. PUBLIC COMMENTS

7. CONSENT CALENDAR

BEGINNING OF CONSENT CALENDAR

Minutes

7.1. Minutes of Prior Meetings

Memo from City Clerk Technician Melissa Lipp and City Clerk Carmen Avalos recommending the City Council approve the minutes of the August 7, 2024 City Council Closed Session Meeting and the August 7, 2024 City Council Meeting.

CC #: 3510

File #: 0102-03

CONTACT: Melissa Lipp mllipp@roseville.ca.us 916-774-5268

Bids / Purchases / Services

7.2. Mahany Park Backstop #4 Repair - Award of Contract

Memo from Park Development Project Manager Kelly Appier and Parks, Recreation & Libraries Director Jill Geller recommending the City Council adopt RESOLUTION 24-289 APPROVING AN AGREEMENT, BY AND BETWEEN THE CITY OF ROSEVILLE AND B&M BUILDERS, INC., AND AUTHORIZING THE CITY MANAGER TO EXECUTE IT ON BEHALF OF THE CITY OF ROSEVILLE. Staff requests Council award an agreement to B&M Builders, Inc. to repair the Mahany Park large baseball field (Field #4) in the amount of $115,420. Staff also requests approval for the City Manager or his designee to approve change order requests in an amount not to exceed 10% of the contract price in accordance with the terms and conditions of the agreement. During the winter storms of 2023, four of the ten vertical steel posts of the backstop shifted and became out of plumb. Based on a structural engineer assessment, it was recommended these be replaced. As part of the project, accessibility upgrades are required. Funding for the Mahany Park

Backstop Repairs project was approved during the FY2024-25 budget in the Citywide Park Fund and is anticipated to be reimbursed 75% by the Federal Emergency Management Agency, 18.75% by the State, and ultimately be 6.25% City funded. There will be no increase in maintenance costs.

CC #: 3488

File #: 0704-01

CONTACT: Kelly Appier 916-774-5927 ksappier@roseville.ca.us

7.3. Woodcreek Golf Course Bunker Renovation Project - Contract Purchase Agreement

Memo from Parks, Recreation & Libraries Superintendent Rob Nakamura and Parks, Recreation & Libraries Director Jill Geller recommending the City Council adopt RESOLUTION NO. 24-298 APPROVING A CONTRACT PURCHASE AGREEMENT, BY AND BETWEEN THE CITY OF ROSEVILLE AND LANDSCAPES UNLIMITED, LLC AND AUTHORIZING THE CITY MANAGER TO EXECUTE IT ON BEHALF OF THE CITY OF ROSEVILLE (3004012). Staff requests Council approve a contract purchase agreement with Landscapes Unlimited, LLC for the Woodcreek Golf Course Bunker Renovation Project in an amount not to exceed $1,048,000 and estimated change orders of up to $8,000. Two approved projects have available resources to complete the renovations and repairs. Staff will return to Council to recommend a budget adjustment consolidating the two project budgets. The current capital improvement projects for the Woodcreek Golf Course Facility Renovations and Restoration and the Woodcreek Golf Club Bunker Renovation are funded within the Golf Course Fund, with no additional impacts on the General Fund.

CC #: 3500

File #: 0704-01

CONTACT: Rob Nakamura 916-774-5135 rnakamura@roseville.ca.us

7.4. Cirby Substation 12kV Switchgear Replacement Civil Construction - Award of Contract

Memo from Power Engineer Austin Kurth and Electric Utility Director Dan Beans recommending the City Council adopt RESOLUTION NO. 24-284 APPROVING AN AGREEMENT, BY AND BETWEEN THE CITY OF ROSEVILLE AND INTERSTATE CONSTRUCTION, INC., AND AUTHORIZING THE CITY MANAGER TO EXECUTE IT ON BEHALF OF THE CITY OF ROSEVILLE. Staff requests Council award a construction contract to Interstate Construction, Inc. in the amount of $248,280 for the Cirby Substation Switchgear Replacement Civil Construction Project. Staff is also requesting authorization for the City Manager or his designee to approve and pay for contract change orders that could increase the contract amount by no more than 10%, or $24,828, for a total of $273,108. Funding is available in the Electric Department's FY2024-25 budget in the Electric Fund.

CC #: 3482

File #: 0900-03

CONTACT: Austin Kurth 916-774-5661 akurth@roseville.ca.us

7.5. Virtual Interactive Simulator System - Sole Source Contract Purchase Agreement

Memo from Management Analyst Mark Peinado and Police Chief Troy Bergstrom recommending the City Council adopt RESOLUTION NO. 24-292 APPROVING A SOLE SOURCE CONTRACT PURCHASE AGREEMENT, BY AND BETWEEN THE CITY OF ROSEVILLE AND VIRTRA, INC., AND AUTHORIZING THE CITY MANAGER TO EXECUTE IT ON BEHALF OF THE CITY OF ROSEVILLE (3003604). Staff requests Council approve a sole source contract purchase agreement with VirTra Inc. for the purchase and installation of a Virtual Interactive Simulator System, for a total amount of $182,014.51. VirTra Inc. is the sole manufacturer of their proprietary interactive simulation system. Funding will come from a grant award that will cover $150,000 of this purchase, the remaining amount of $32,014.51 will be paid with funding from the Supplemental Law Enforcement Fund.

CC #: 3492

File #: 0323

CONTACT: Mark Peinado 916-774-5021 mcpeinado@roseville.ca.us

7.6. Water Endpoints Communication Modules and Associated Parts - Sole Source Purchase Order

Memo from Water Utility Manager George Hanson and Environmental Utilities Director Richard Plecker recommending the City Council approve a sole source purchase order with Itron for water endpoints and associated parts for a not-to-exceed amount of $590,580.42 for FY2024-25. The recommended purchase is a sole source because there are no other providers in the region of the Itron endpoints for the City's Advanced Metering Infrastructure (AMI) for the water and electric systems. The estimated expenses are funded as follows: $125,580.42 from the Water Operations Fund and $465,000 from the Water Rehabilitation Fund.

CC #: 3497

File #: 0203-09

CONTACT: George Hanson 916-746-1764 ghanson@roseville.ca.us

Resolutions

7.7. Transit Advertising - Agreement Amendment

Memo from Alternative Transportation Manager Ed Scofield and Public Works Director Jason Shykowski recommending the City Council adopt RESOLUTION NO. 24-291 APPROVING A FIRST AMENDMENT TO AGREEMENT FOR TRANSIT ADVERTISING SERVICES, BY AND BETWEEN THE CITY OF ROSEVILLE AND IRON HORSE MEDIA, LLC, AND AUTHORIZING THE CITY MANAGER TO EXECUTE IT ON BEHALF OF THE CITY OF ROSEVILLE. Staff requests Council approve an Amendment to the Agreement with Iron Horse Media for advertising on Roseville Transit buses. This amendment will continue the agreement for two additional years with a guaranteed minimum revenue of $121,500 per year to the Transit Fund.

CC #: 3491

File #: 0721

CONTACT: Ed Scofield 916-774-5449 ecscofield@roseville.ca.us

7.8. Creekview Phase 4 Village 20 Subdivision - Final Map and Subdivision Agreement

Memo from Associate Engineer Jeff Hendrix and Development Services Director Mike Isom recommending the City Council adopt RESOLUTION NO. 24-285 APPROVING A SUBDIVISION AGREEMENT, BY AND BETWEEN THE CITY OF ROSEVILLE AND ANTHEM UNITED CREEKVIEW DEVELOPMENTS LIMITED PARTNERSHIP, AND AUTHORIZING THE CITY MANAGER TO EXECUTE IT ON BEHALF OF THE CITY OF ROSEVILLE; and approve the Creekview Phase 4 - Village 20 final map, accept on behalf of the public, the public utility easements, and accept, subject to improvement, Lots A, B, C and D and the rights of way offered thereon. The Engineering Division has completed its review of the final map and found that it is in compliance with the approved tentative map. This map will create 77 residential lots and 4 public landscape lots. The actions requested have no fiscal impact to the City's General Fund.

CC #: 3484

File #: 0400-04-13-1 & 0400-07

CONTACT: Jeff Hendrix 916-774-5463 jhendrix@roseville.ca.us

7.9. Creekview Phase 4 Village 6 and Creekview Phase 4 Village 8 Subdivisions - Final Maps and Subdivision Agreement

Memo from Associate Engineer Edward Winston and Development Services Director Mike Isom recommending the City Council adopt RESOLUTION NO. 24-286 APPROVING A SUBDIVISION AGREEMENT, BY AND BETWEEN THE CITY OF ROSEVILLE AND ANTHEM UNITED CREEKVIEW DEVELOPMENT LIMITED PARTNERSHIP, AND AUTHORIZING THE CITY MANAGER TO EXECUTE IT ON BEHALF OF THE CITY OF ROSEVILLE; approve the Creekview Phase 4 Village 6 final map, accept, on behalf of the public, the public utility easements offered thereon; and accept, subject to improvement, Lots A, B, and C, and the rights of way offered thereon and approve the abandonment of the easements as listed thereon; and accept the Creekview Phase 4 Village 8 final map, accept, on behalf of the public, the public utility easements and storm drainage easement offered thereon; and accept, subject to improvement, Lot A, and the rights of way offered thereon; and approve the abandonment of the easements as listed thereon. The Engineering Division has completed its review of the Creekview Phase 4 Village 6 and Village 8 final maps and found they are in compliance with the approved tentative maps. The Village 6 map will create 48 residential lots and 3 public landscape lots and the Village 8 map will create 32 residential lots and 1 public landscape lot. The actions requested have no fiscal impact on the City's General Fund.

CC #: 3485

File #: 0400-04-13-1 & 0400-07

CONTACT: Edward Winston 916-774-5432 ewinston@roseville.ca.us

7.10. Creekview Phase 4 Village 7 Subdivision - Final Map and Subdivision Agreement

Memo from Associate Engineer Jeff Hendrix and Development Services Director Mike Isom recommending the City Council adopt RESOLUTION NO. 24-287 APPROVING A SUBDIVISION AGREEMENT, BY AND BETWEEN THE CITY OF ROSEVILLE AND ANTHEM UNITED CREEKVIEW DEVELOPMENTS LIMITED PARTNERSHIP, AND AUTHORIZING THE CITY MANAGER TO EXECUTE IT ON BEHALF OF THE CITY OF ROSEVILLE; and approve the Creekview Phase 4 - Village 7 final map and accept on behalf of the public, the public utility easements, and accept, subject to improvement, Lots A, B and C and the rights of way offered thereon. The Engineering Division has completed its review of the final map and found that it is in compliance with the approved tentative map. This map will create 74 residential lots and 3 public landscape lots. The actions requested have no fiscal impact to the City's General Fund.

CC #: 3486

File #: 0400-04-13-1 & 0400-07

CONTACT: Jeff Hendrix 916-774-5463 jhendrix@roseville.ca.us

7.11. Roseville Police Department Expansion Project - Professional Design Services Agreement

Memo from Project Supervisor Andre Baranov and Public Works Director Jason Shykowski recommending the City Council adopt RESOLUTION NO. 24-290 APPROVING A PROFESSIONAL DESIGN SERVICES AGREEMENT, BY AND BETWEEN THE CITY OF ROSEVILLE AND 19SIX ARCHITECTS, AND AUTHORIZING THE CITY MANAGER TO EXECUTE IT ON BEHALF OF THE CITY OF ROSEVILLE. Staff requests Council approve a professional design services agreement with 19Six Architects, Inc., for the design of the Police Department Expansion Project in the amount of $1,351,350. Funds are available in the Police Department Facility Expansion, Design and Construction Project in the Public Facilities Fund. There will be increased facility maintenance costs in the General Fund associated with the project due to the increased parking and building area. The project intends to incorporate energy savings from shade canopies and may realize solar electrical production from photovoltaic panels.

CC #: 3490

File #: 0900-04

CONTACT: Andre Baranov 916-774-5342 ajbaranov@roseville.ca.us

7.12. Water, Wastewater, and Recycled Water Cost-of-Service / Rate Study – Professional Services Agreement

Memo from Environmental Utilities Business Analyst Joseph Barrow and Environmental Utilities Director Richard Plecker recommending the City Council adopt RESOLUTION NO. 24-297 APPROVING A PROFESSIONAL SERVICES AGREEMENT, BY AND BETWEEN THE CITY OF ROSEVILLE AND RAFTELIS FINANCIAL CONSULTANTS, INC., AND

AUTHORIZING THE CITY MANAGER TO EXECUTE IT ON BEHALF OF THE CITY OF ROSEVILLE. Staff requests Council approve a professional services agreement with Raftelis Financial Consultants, Inc. for a utility rate study for water, wastewater, and recycled water in the amount of $91,560. Funding is from the available resources in the Environmental Utilities Department's FY2024-25 annual budgets in the Water and Wastewater Operations Funds.

CC #: 3499

File #: 0203-09

CONTACT: Joseph Barrow 916-746-1732 jlbarrow@roseville.ca.us

7.13. Duke Davis Water Feature Renovation Project - Notice of Completion

Memo from Park Development Project Manager Kelly Appier and Parks, Recreation & Libraries Director Jill Geller recommending the City Council adopt RESOLUTION NO. 24-288 ACCEPTING THE PUBLIC WORK KNOWN AS DUKE DAVIS WATER FEATURE RENOVATION PROJECT, APPROVING THE "NOTICE OF COMPLETION", AND AUTHORIZING THE PARKS, RECREATION AND LIBRARIES DIRECTOR TO EXECUTE SAID NOTICE ON BEHALF OF THE CITY OF ROSEVILLE. The Parks, Recreation & Libraries Department has made a final inspection of the Duke Davis Water Feature Renovation Project and has found that all contract work has been completed in accordance with the improvement plans and specifications. The project is now ready for acceptance. The renovation site is at the Davis "Duke" Park on Northpark Dr. The project replaced an existing water and sand play area with a new misting water feature. In accordance with City specifications, the contractor shall guarantee the installation of these improvements for a period of twelve (12) months from the date of this Notice of Completion. Funding of $138,000 was approved using the North Roseville Community Facilities District No. 2 (Services District), Zone C. There will be no increase in maintenance costs and no General Fund impact.

CC #: 3487

File #: 0704-01

CONTACT: Kelly Appier 916-774-5927 ksappier@roseville.ca.us

7.14. RiverArc Project – Memorandum of Agreement Amendment

Memo from Environmental Utilities Assistant Director Sean Bigley and Environmental Utilities Director Richard Plecker recommending the City Council adopt RESOLUTION NO. 24-295 APPROVING AMENDMENT 1 TO AMENDED AND RESTATED MEMORANDUM OF AGREEMENT, BY AND BETWEEN THE CITY OF SACRAMENTO, SACRAMENTO COUNTY WATER AGENCY, AND PLACER COUNTY WATER AGENCY AND THE CITY OF ROSEVILLE, AND AUTHORIZING THE CITY MANAGER TO EXECUTE IT ON BEHALF OF THE CITY OF ROSEVILLE. Staff requests Council approval of Amendment 1 of the Amended and Restated Memorandum of Agreement for Planning and Design of the RiverArc Project to allow for Roseville's participation in the environmental review and project design of the RiverArc Project. By engaging in this phase of the RiverArc Project, this will provide Roseville with another regional water infrastructure project that could

provide significant water reliability benefits in the future. Roseville's participation in this phase of the RiverArc Project requires two participation payments totaling $944,277 to Placer County Water Agency. The required participation payments are included in the FY2024-25 budget and are planned for the FY2025-26 budget in the River Arc Project, which is funded through the Water Construction Fund, which receives funding via water connection fees paid by developers and other parties that connect into the City's drinking water system. Any participation in future phases of the RiverArc Project, beyond what is included in this item, will come to the City Council for future consideration as separate items.

CC #: 3496

File #: 0800-02

CONTACT: Sean Bigley 916-774-5513 sbigley@roseville.ca.us

7.15. California Greenhouse Gas Cap-and-Trade Program - 2025 Directly Allocated Allowance Allocation

Memo from Electric Business Analyst Long Zhang and Electric Utility Director Dan Beans recommending the City Council adopt RESOLUTION NO. 24-293 APPROVING 100% OF THE ALLOCATION OF CITY'S 2025 GREENHOUSE GAS CAP-AND-TRADE PROGRAM ALLOWANCES. Staff requests Council approve 100% of the City's 2025 Greenhouse Gas (GHG) allowances to the Compliance account for future compliance obligations, with no allowances allocated to the Auction account. There is no direct fiscal impact associated with the GHG allowance allocation. The allowances, valued at approximately $11 million, will be used to offset future GHG compliance costs.

CC #: 3493

File #: 0800-03

CONTACT: Long Zhang 916-774-5652 lzhang@roseville.ca.us

7.16. HOME Investment Partnerships Program - Revised Resolution

Memo from Housing Analyst Sara Thornton-Garcia and Economic Development Director Melissa Anguiano recommending the City Council adopt RESOLUTION NO. 24-299 AUTHORIZING THE SUBMISSION OF THE HOME INVESTMENT PARTNERSHIPS PROGRAM APPLICATION TO THE CALIFORNIA STATE DEPARTMENT OF HOUSING AND COMMUNITY DEVELOPMENT, AND AUTHORIZING THE MAYOR TO EXECUTE IT AND ANY RELATED DOCUMENTS NECESSARY TO PARTICIPATE AND COMPLY WITH THE PROGRAM ON BEHALF OF THE CITY OF ROSEVILLE. Staff requests Council approve a revised resolution to allow the Mayor to execute documents required by the California State Department of Housing and Community Development to complete an application to use HOME Investment Partnerships Program funding in the amount of $1,500,000 to support the rehabilitation of Sun Rose apartments, a Project Homekey permanent supportive housing site located in the City.

CC #: 3501

File #: 0709

CONTACT: Trisha Isom 916-746-1239 tisom@roseville.ca.us
Sara Thornton-Garcia 916-774-5295 srthornton@roseville.ca.us

Ordinances (for introduction and adoption - appropriation/urgency measures)

7.17. C-63 Neighborhood Park – Budget Adjustment

Memo from Park Planning & Development Manager Tara Gee and Parks, Recreation & Libraries Director Jill Geller recommending the City Council adopt ORDINANCE NO. 6850 AUTHORIZING CERTAIN AMENDMENTS TO THE FISCAL YEAR 2024-25 BUDGET AND DECLARING THIS ORDINANCE TO BE IMMEDIATELY EFFECTIVE AS AN APPROPRIATION MEASURE. Staff requests Council approve a budget adjustment in the amount of $1,040,000 in the Creekview Neighborhood Park Fund for the C-63 Neighborhood Park Project, increasing the total project budget to $1,200,000. The C-63 Neighborhood Park Project was established as a Capital Improvement Project in FY2023-24. Design and construction document preparation of the park site are underway. The recommended budget adjustment provides funding for the construction portion of the park in FY2024-25. Maintenance for the park will be funded by Creekview Community Facilities District No. 2 (Public Services). There will be no General Fund impact.

CC #: 3481

File #: 0704-01 & 0201-01

CONTACT: Tara Gee 915-774-5253 tgee@roseville.ca.us

7.18. Fire Station #3 Building Assessment Project - Capital Improvement Project Approval and Budget Adjustment

Memo from Project Coordinator Lori Crittenden and Public Works Director Jason Shykowski recommending the City Council adopt ORDINANCE NO. 6851 AUTHORIZING CERTAIN AMENDMENTS TO THE FISCAL YEAR 2024-25 BUDGET AND DECLARING THIS ORDINANCE TO BE IMMEDIATELY EFFECTIVE AS AN APPROPRIATION MEASURE. Staff requests Council authorize the establishment of a new Capital Improvement Project, Fire Station #3 Building Assessment Project, and approve a budget adjustment for the Fire Station #3 Building Assessment. The budget adjustment of $312,092 will be funded by the closure of the existing Fire Station #3 Dorm Room Improvements project. That project was originally funded by the Facility Rehabilitation Fund, which receives its funding from the General Fund. The budget adjustment will also release $34,677 back to the General Fund. The building assessment will be conducted to determine current condition, accessibility issues, and long-term usability and will have no new impact to the Facility Rehabilitation Fund.

CC #: 3494

File #: 0900-04 & 0201-01

CONTACT: Lori Crittenden 916-774-5707 lcrittenden@roseville.ca.us

7.19. Public Safety 2023 Homeland Security Grant Program - Capital Improvement Projects Approval, Grant Awards, and Budget Adjustments

Memo from Battalion Chief Eric Sanchez and Fire Chief Rick Bartee recommending the City Council adopt RESOLUTION NO. 24-303

ACCEPTING A GRANT AWARD FROM THE UNITED STATES DEPARTMENT OF HOMELAND SECURITY; and adopt ORDINANCE NO. 6857 AUTHORIZING CERTAIN AMENDMENTS TO THE FISCAL YEAR 2024-25 BUDGET AND DECLARING THIS ORDINANCE TO BE IMMEDIATELY EFFECTIVE AS AN APPROPRIATION MEASURE; and adopt RESOLUTION NO. 24-304 ACCEPTING A GRANT AWARD FROM THE UNITED STATES DEPARTMENT OF HOMELAND SECURITY; and adopt ORDINANCE NO. 6858 AUTHORIZING CERTAIN AMENDMENTS TO THE FISCAL YEAR 2024-25 BUDGET AND DECLARING THIS ORDINANCE TO BE IMMEDIATELY EFFECTIVE AS AN APPROPRIATION MEASURE. The Fire Department and Police Department staff request Council approve the establishment of two new Capital Improvement Projects, accept grants from the 2023 Department of Homeland Security, and approve two budget adjustments. The funds will be used to purchase a $68,065 Raman chemical detector and $10,000 to replace a railcar emergency response kit for the Fire Department's Type I Hazardous Materials Team. The Roseville Police Department was awarded a total of $46,480 to purchase $5,490 in magnified optics equipment for the Rapid Containment Team, $2,990 in tactical medicine training for the Tactical Medicine Program, and $38,000 in night vision/virtual reality equipment for Special Weapons And Tactics team members. The total cost is estimated to be $124,545 and will be reimbursed through an equivalent grant award with no City share of the costs. Maintenance costs for the new equipment are expected to be equivalent to the maintenance costs of the equipment being replaced and is included in the departments' existing budgets in the General Fund. There is no net effect on the General Fund. Both departments will continue to seek grants to replace this type of equipment as technology improves and the equipment reaches its end of life.

CC #: 3506

File #: 0323 & 0324 & 0214 & 0201-01

CONTACT: Eric Sanchez 916-774-5400 esanchez@roseville.ca.us

7.20. Citywide East Site Radio Communications Tower Project - Award of Contract and Budget Adjustment

Memo from Public Works Project Supervisor Andre Baranov, Information Technology Program Manager Karl Grover, Chief Information Officer Hong Sae, and Public Works Director Jason Shykowski recommending the City Council adopt RESOLUTION NO. 24-302 APPROVING AN AGREEMENT, BY AND BETWEEN THE CITY OF ROSEVILLE AND SLC, INC., AND AUTHORIZING THE CITY MANAGER TO EXECUTE IT ON BEHALF OF THE CITY OF ROSEVILLE; and adopt ORDINANCE NO. 6856 AUTHORIZING CERTAIN AMENDMENTS TO THE FISCAL YEAR 2024-25 BUDGET AND DECLARING THIS ORDINANCE TO BE IMMEDIATELY EFFECTIVE AS AN APPROPRIATION MEASURE. Staff requests Council approve award of the East Site Construction agreement for the Citywide East Site Radio Communications Tower project, and authorize the City Manager to approve a 15% contingency to cover costs of unanticipated changed to scope or schedule and ensure successful completion of the project. Staff also requests Council approve a budget adjustment in the amount of $1,287,594 to provide adequate funding to pay for all costs including equipment and services in

addition to site construction. Funding for the project was approved in 2015 using multiple funding sources including the Strategic Improvement Fund, Information Technology Replacement Fund, and the Public Facilities Fund. The total cost of the project is anticipated to be $2,965,306 so the budget adjustment will address the gap in funding from the current project budget of $1,677,712. Once the project is complete, the ongoing site maintenance will be included in the annual Information Technology Operations Fund budget.

CC #: 3505

File #: 0800-05

CONTACT: Karl Grover 916-774-5145 kgrover@roseville.ca.us

7.21. Staffing Changes

Memo from Human Resource Manager Macy Dippert and Human Resource Director Stacey Peterson recommending the City Council adopt ORDINANCE NO. 6854 AMENDING ORDINANCE NO. 6840, THE SALARY ORDINANCE FOR SEASONAL/TEMPORARY EMPLOYEES, AS AMENDED BY APPENDIX "V" TO BE EFFECTIVE AUGUST 24, 2024, AS AN URGENCY MEASURE; and adopt ORDINANCE NO. 6855 AMENDING ORDINANCE NO. 6842, THE SALARY ORDINANCE FOR MANAGEMENT EMPLOYEES, AS AMENDED BY APPENDIX "E" TO BE EFFECTIVE AUGUST 24, 2024, AS AN URGENCY MEASURE. As part of an ongoing assessment of the appropriate staffing levels to provide a high level of service to the community, staff recommends that the City Council approve the Temporary salary schedule reflecting the reclassification of an Aqua Fitness Instructor I/II to Aqua Fitness Instructor classification to remove the levels. Also recommended are updates to the Management A & B salary schedules reflecting the reclassification of the Utility Billing Operations Manager to Customer Care Manager and Electric Customer Programs Supervisor to Electric Customer Programs and Public Affairs Supervisor classifications. Staff also recommend updates to the city allocation schedule that includes the addition of one (1) Assistant/Associate Electric Analyst position, reclassification of three (3) positions, including reclassifying an Engineering Technician to Senior Engineering Technician, Utility Billing Operations Manager to a new Customer Care Manager, and Electric Customer Programs Supervisor to Electric Customer Programs and Public Affairs Supervisor; and deletion of one (1) Meter Reader position. For the remainder of FY2024-25, the financial impact of the recommendations to the Electric, Water Operations, Wastewater Operations, and Waste Services Funds is $41,999. All net cost increases can be absorbed in existing appropriations, so no budget adjustments are requested at this time.

CC #: 3503

File #: 0601-01

CONTACT: Macy Dippert 916-774-5215 mdippert@roseville.ca.us

7.22. Sierra Vista Parcel Acquisition Project - Community Development Block Grant Loan Agreement and Budget Adjustment

Memo from Housing Analyst Kristine Faelz and Economic Development Director Melissa Anguiano recommending the City Council adopt RESOLUTION NO. 24-300 APPROVING A LOAN AGREEMENT, BY AND BETWEEN THE CITY OF ROSEVILLE AND GREEK ORTHODOX

HOUSING CORPORATION, AND AUTHORIZING THE CITY MANAGER TO EXECUTE IT, THE PROMISSORY NOTE, DEED OF TRUST AND ANY DOCUMENTS NECESSARY TO FUND AND ISSUE THE COMMUNITY DEVELOPMENT BLOCK GRANT LOAN, ON BEHALF OF THE CITY OF ROSEVILLE; and ORDINANCE NO. 6353 AUTHORIZING CERTAIN AMENDMENTS TO THE FISCAL YEAR 2024-25 BUDGET AND DECLARING THIS ORDINANCE TO BE IMMEDIATELY EFFECTIVE AS AN APPROPRIATION MEASURE. Staff requests Council approve a Community Development Block Grant loan agreement between the City and Greek Orthodox Housing Corporation and authorizing the City Manager to execute necessary documents on behalf of the City to fund the Sierra Vista Parcel Acquisition project for affordable housing development. Staff also requests Council adopt an ordinance approving a budget adjustment to increase the Grants Deferred Loans expenditure budget in the Community Development Block Grant fund by $571,850. No General Fund resources will be used in the funding of this project.

CC #: 3502

File #: 0709-03 & 0201-01

CONTACT: Kristine Faelz 916-774-5451 kpfaelz@roseville.ca.us
Claudia Carreno 916-774-5476 ccarreno@roseville.ca.us

END OF CONSENT CALENDAR

8. RESOLUTIONS

8.1. State Ballot Measure - Proposition 36: The Drug and Theft Crime Penalties and Treatment-Mandated Felonies Initiative

Memo from Government Relations Administrator Mark Wolinski and Deputy City Manager Megan Scheid recommending the City Council adopt RESOLUTION NO. 24-301 SUPPORTING STATE BALLOT MEASURE PROPOSITION 36 – THE DRUG AND THEFT CRIME PENALTIES AND TREATMENT-MANDATED FELONIES. Staff is providing an overview on Proposition 36 – The Drug and Theft Crime Penalties and Treatment-Mandated Felonies Initiative that has qualified for the November 2024 ballot. The costs of these activities are contained within the City's current budget.

CC #: 3504

File #: 0114

CONTACT: Mark Wolinski 916-774-5179 mwolinski@roseville.ca.us

9. SPECIAL REQUESTS/REPORTS/PRESENTATION

9.1. Grants Advisory Commission - Policy Manual Updates and Direction on Voting Status of Youth Commissioner

Memo from Management Analyst Tobi Thomas and Deputy City Manager Megan Scheid recommending the City Council adopt RESOLUTION NO. 24-294 APPROVING REVISIONS TO THE CITIZENS' BENEFIT FUND POLICY MANUAL. Staff requests Council approve the Youth Commissioner to become a voting member of the Grants Advisory Commission (GAC) and approve

the GAC recommendations to update the Citizens' Benefit Fund Policy Manual regarding eligibility of applicants. There is no fiscal impact associated with this report.

CC #: 3495

File #: 0103-34-02

CONTACT: Tobi Thomas 916-746-1368 tthomas@roseville.ca.us

9.2. Council Discretionary Funds - Latino Leadership Council

Memo from Executive Assistant Heather Blanco and City Clerk Carmen Avalos requesting the City Council consider a request for $1,500 from Council Discretionary Funds for the Latino Leadership Council for their 10th Annual Forum on September 11, 2024. This year's theme is "Celebrating 10 Years of Bringing our Communities Together: Latinos Thrive when Partnerships Work". The balance remaining in the Council's Discretionary Funds for FY2024-25 after rolling over unspent funds from last fiscal year is $18,321.

CC #: 3483

File #: 0102

CONTACT: Heather Blanco 916-746-1171 hblanco@roseville.ca.us

9.3. Council Discretionary Funds - The Gathering Inn

Memo from Executive Assistant Heather Blanco and City Clerk Carmen Avalos requesting the City Council consider a request for sponsorship from Council Discretionary Funds for The Gathering Inn's annual Gathering for Hope 2024 event taking place at the Rocklin Event Center on November 15, 2024.

CC #: 3498

File #: 0102

CONTACT: Heather Blanco 916-746-1171 hblanco@roseville.ca.us

9.4. General Municipal Election November 5, 2024 - Consideration and Direction on Elections and/or Appointments for Vacancies in Districts 1 and 3

Memo from City Clerk Carmen Avalos recommending the City Council receive the Certification of Facts that there are not more candidates than offices to be filled; and either adopt RESOLUTION NO. 24-305 RESOLUTION OF THE CITY COUNCIL OF THE CITY OF ROSEVILLE, COUNTY OF PLACER, STATE OF CALIFORNIA, PROVIDING FOR THE APPOINTMENT TO THE OFFICES OF MEMBERS OF THE CITY COUNCIL, DISTRICT 1 AND DISTRICT 3, THAT WERE TO BE ELECTED ON TUESDAY, NOVEMBER 5, 2024, AND CANCELING THE ELECTION FOR DISTRICTS 1 AND 3 or provide other direction pursuant to California Elections Code Section 10229.

CC #: 3509

File #: 0502-01

CONTACT: Carmen Avalos 916-774-5269 cavalos@roseville.ca.us

10. PUBLIC HEARING

NOTICE TO THE PUBLIC

City Council, when considering the matter scheduled for hearing, will take the following actions:

1. Open the Public Hearing
2. Presentation by Staff
3. Presentation by applicant or Appellant
4. Accept Public Testimony
5. Appellant or Applicant Rebuttal Period
6. Close the Public Hearing
7. City Council Comments and Questions
8. City Council Action

In the future, if you wish to challenge in court any of the matters on this agenda for which a public hearing is to be conducted, you may be limited to raising only those issues, which you, or someone else raised orally at the Public Hearing or in written correspondence received by the City on or before the hearing.

Public Hearings listed for continuance will be continued as noted and posting of this agenda serves as notice of continuation.

10.1. Roseville Municipal Code - Regional Sewer Connection Fee Adjustments

Memo from Environmental Utilities Business Services Manager Shane Whittington and Environmental Utilities Director Richard Plecker recommending the City Council introduce for first reading an ORDINANCE AMENDING SECTION 14.16.080 OF CHAPTER 14.16 OF TITLE 14 OF THE ROSEVILLE MUNICIPAL CODE REGARDING REGIONAL SEWER CONNECTION FEE. Staff requests Council conduct a public hearing to receive public comment regarding proposed regional sewer connection fee adjustments. The proposed changes are to update the municipal code to reflect the reduced regional sewer connection fee from $9,852 (after inflation adjustments) per sewer unit to $9,802 per sewer unit for new connections to the wastewater system. This would make the Municipal Code consistent with the recommendation in the Regional Wastewater Capacity Fee Study conducted by IB Consultants LLC and approved by the South Placer Wastewater Authority (SPWA) Board on June 27, 2024, via Resolution No. 2024-15. While SPWA is responsible to reevaluate and recommend the minimum Regional Connection Fee not less than once every five years, it is the City's responsibility to enact and enforce the minimum Regional Connection Fee.

CC #: 3507

File #: 0800-02

CONTACT: Shane Whittington 916-774-5557 slwhittington@roseville.ca.us

11. COUNCIL REPORTS / PUBLIC COMMENTS

12. ADJOURNMENT

COUNCIL COMMUNICATION

CC #: 3508
File #: 0102-10

Title:	Resolution - 2024 Sylvia Besana Community Volunteer Award
Contact:	Blair Hutchison 916-774-5266 bmhutchison@roseville.ca.us

Meeting Date: 8/21/2024
Item #: 5.1.

RECOMMENDATION TO COUNCIL

Recommend City Council commend Cathy SooHoo as being the recipient of the City of Roseville 2024 Sylvia Besana Community Volunteer Award.

BACKGROUND

Not applicable.

FISCAL IMPACT

Not applicable.

ENVIRONMENTAL REVIEW

The California Environmental Quality Act (CEQA) does not apply to activities that will not result in a direct or reasonable foreseeable indirect physical change in the environment (CEQA Guidelines §15061(b)(3). Ceremonial documents do not include the potential for a significant environmental effect, and therefore is not subject to CEQA.

CITY COUNCIL STRATEGIC PLAN/OVERARCHING GOALS

Goal B - Support community engagement and advocacy

Respectfully Submitted,

Blair Hutchison, City Clerk Technician

Carmen Avalos, City Clerk

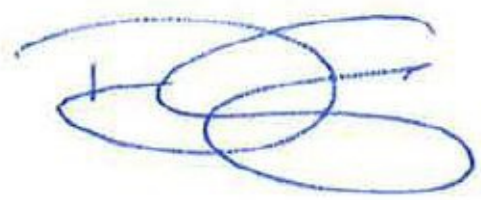

_____

Dominick Casey, City Manager

ATTACHMENTS:

Description

Resolution - 2024 Sylvia Besana Community Volunteer Award

Resolution

2024 SYLVIA BESANA
COMMUNITY VOLUNTEER AWARD

WHEREAS, Sylvia Besana, a Roseville native who epitomized the word "volunteer" spent the greater part of her life giving to the community and making a difference through her commitment to serve, and the continuation of her legacy will enhance the Roseville community for years to come; and

WHEREAS, there is no greater asset to a community than the power of dedicated volunteers who give their time and talents to work tirelessly behind the scenes unconditionally; and

WHEREAS, the impact of one person can be inspirational and far-reaching in benefiting the community; and

WHEREAS, the Roseville community has benefited from the outstanding volunteerism of Cathy SooHoo through her long and dedicated service to Child Advocates of Placer County, and it is fitting that she be recognized for her efforts.

NOW, THEREFORE, BE IT RESOLVED BY THE COUNCIL OF THE CITY OF ROSEVILLE, CALIFORNIA, that **CATHY SOOHOO** be commended as the recipient of the City of Roseville 2024 Sylvia Besana Community Volunteer Award.

SIGNED AND APPROVED this 21st day of August 2024.

BRUCE HOUDESHELDT, MAYOR

CITY OF ROSEVILLE
INCORPORATED APRIL 10, 1909

COUNCIL COMMUNICATION

CC #: 3510
File #: 0102-03

Title: Minutes of Prior Meetings
Contact: Melissa Lipp mllipp@roseville.ca.us 916-774-5268

Meeting Date: 8/21/2024
Item #: 7.1.

RECOMMENDATION TO COUNCIL

Approve the minutes of the August 7, 2024 City Council Closed Session Meeting and the August 7, 2024 City Council Meeting.

BACKGROUND

Not applicable.

FISCAL IMPACT

Not applicable.

ENVIRONMENTAL REVIEW

There is no fiscal impact associated with this request.

CITY COUNCIL STRATEGIC PLAN/OVERARCHING GOALS

The California Environmental Quality Act (CEQA) does not apply to activities that will not result in a direct or reasonably foreseeable indirect physical change in the environment, or is otherwise not considered a project as defined by CEQA Statute §21065 and CEQA State Guidelines §15060(c)(3) and §15378. The City Council minutes are not subject to CEQA. No additional environmental review is required.

Respectfully Submitted,

Melissa Lipp, City Clerk Technician

Carmen Avalos, City Clerk

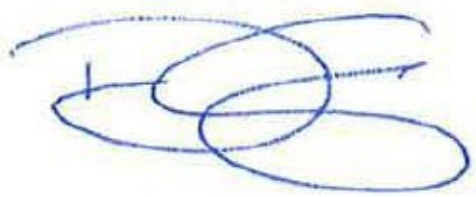

Dominick Casey, City Manager

ATTACHMENTS:

Description

August 7, 2024 Closed Session

August 7, 2024

MINUTES
August 7, 2024

CLOSED SESSION
5:00 p.m.
City Council Chambers
311 Vernon Street
Roseville, California
www.roseville.ca.us

A. CLOSED SESSION CALL TO ORDER

Mayor Bruce Houdesheldt called the meeting to order at 5:00 p.m.

B. CLOSED SESSION ROLL CALL

Present: Vice Mayor Krista Bernasconi, Councilmember Scott Alvord, Councilmember Pauline Roccucci, Councilmember Tracy Mendonsa, Mayor Bruce Houdesheldt.

C. CLOSED SESSION PUBLIC COMMENTS

No public comment received.

D. CLOSED SESSION

D.1. Conference with Legal Counsel – Anticipated Litigation

Pursuant to Government Code Section 54956.9(d)(2)
Significant exposure to litigation – one case
CONTACT: M. Sheidenberger 916-774-5325 msheidenberger@roseville.ca.us

Closed Session Disclosure:

No reportable action taken.

E. CLOSED SESSION ADJOURNMENT

Mayor Bruce Houdesheldt adjourned the meeting at 5:50 p.m.

CITY OF ROSEVILLE CALIFORNIA

MINUTES
August 7, 2024

CITY COUNCIL
6:00 p.m.
Council Chambers
311 Vernon Street
Roseville, CA
www.roseville.ca.us

1. CALL TO ORDER

Mayor Bruce Houdesheldt called the meeting to order at 6:03 p.m.

2. ROLL CALL

Present: Vice Mayor Krista Bernasconi, Councilmember Scott Alvord, Councilmember Pauline Roccucci, Councilmember Tracy Mendonsa, Mayor Bruce Houdesheldt.

3. PLEDGE OF ALLEGIANCE

Katarina Alexander led the Pledge of Allegiance.

4. MEETING PROCEDURES

City Clerk Carmen Avalos announced the procedures for addressing the City Council.

5. PUBLIC COMMENTS

Mike Simpson spoke on traffic concerns in his neighborhood.

Placer County Water Agency Director of Technical Services, Jeremy Shepherd, provided an update on Pacific Gas & Electric Spaulding Project repairs.

Murial Moore spoke on political signs on vehicles.

6. CONSENT CALENDAR

BEGINNING OF CONSENT CALENDAR

Motion by Pauline Roccucci, seconded by Tracy Mendonsa, to remove Item 6.16 from the Consent Calendar and approve the remaining items as recommended. The Motion Passed.

Roll call vote: Ayes: Alvord, Bernasconi, Houdesheldt, Mendonsa, Roccucci

Minutes

6.1. Minutes of Prior Meetings

Memo from City Clerk Technician Melissa Lipp and City Clerk Carmen Avalos recommending the City Council approve the minutes of the July 17, 2024 City Council Meeting.

CC #: 3480

File #: 0102-03

CONTACT: Melissa Lipp mllipp@roseville.ca.us 916-774-5268

Bids / Purchases / Services

6.2. Church Street and Pump Station 26 Collection System Improvements Project – Award of Construction Agreement

Memo from Assistant Engineer William Montz and Environmental Utilities Director Richard Plecker recommending the City Council adopt RESOLUTION NO. 24-272 APPROVING AN AGREEMENT, BY AND BETWEEN THE CITY OF ROSEVILLE AND MOUNTAIN CASCADE, INC., AND AUTHORIZING THE CITY MANAGER TO EXECUTE IT ON BEHALF OF THE CITY OF ROSEVILLE. Staff requests Council approval and award of a Construction Agreement to Mountain Cascade, Inc. for the Church Street and Pump Station 26 Collection System Improvements Project. The agreement amount is for $7,065,151, which includes $4,278,000 for the work at Church Street funded by the Wastewater Rehabilitation Fund and $2,787,151 for the work at Pump Station 26 funded by the South Placer Wastewater Authority. Additionally, this item requests authorization for the City Manager or his designee to approve and pay for contract change orders for the project that could increase the contract amount by no more than 5% for the work at Church Street in the amount of $213,900, and by no more than 5% for the work at Pump Station 26 in the amount of $139,358 for a total not-to-exceed change order amount of $353,258 and a total, not-to-exceed contract amount of $7,418,409.

CC #: 3462

File #: 0203-09

CONTACT: William Montz 916-938-0154 wlmontz@roseville.ca.us

6.3. On-Call Construction Fencing Services – Contract Purchase Agreements

Memo from Assistant Engineer William Montz and Environmental Utilities Director Richard Plecker recommending the City Council adopt RESOLUTION NO. 24-275 APPROVING A CONTRACT PURCHASE AGREEMENT, BY AND BETWEEN THE CITY OF ROSEVILLE AND ARROW CREATIVE SOLUTIONS, INC. DBA ARROW FENCE, AND AUTHORIZING THE CITY MANAGER TO EXECUTE IT ON BEHALF OF THE CITY OF ROSEVILLE (3003937); and adopt RESOLUTION NO. 24-276 APPROVING A CONTRACT PURCHASE AGREEMENT, BY AND BETWEEN THE CITY OF ROSEVILLE AND CRUSADER FENCE COMPANY, LLC, AND AUTHORIZING THE CITY MANAGER TO EXECUTE IT ON BEHALF OF THE CITY OF ROSEVILLE (3003939). Staff requests Council approval of two (2) On-Call Construction Fencing Service Agreements with a not-to-exceed cost for the services of $350,000 per year per Agreement, for up to four years, and authorization for the City Manager to execute them on behalf of the City. These projects may be funded from the Environmental Utilities' Rehabilitation Program, Operating Budget, or Capital Improvement Program. There will be no fiscal impact on the General Fund.

CC #: 3466

File #: 0203-09

CONTACT: William Montz 916-938-0154 wlmontz@roseville.ca.us

6.4. West Zone Reclaimed Water Tanks Rehabilitation Project - Award of Construction Agreement and Budget Adjustment

Memo from Senior Engineer Inderpreet Chaggar and Environmental Utilities Director Richard Plecker recommending the City Council adopt RESOLUTION NO. 24-283 APPROVING AN AGREEMENT, BY AND BETWEEN THE CITY OF ROSEVILLE AND EURO STYLE MANAGEMENT, AND AUTHORIZING THE CITY MANAGER TO EXECUTE IT ON BEHALF OF THE CITY OF ROSEVILLE; and adopt ORDINANCE NO. 6848 AUTHORIZING CERTAIN AMENDMENTS TO THE FISCAL YEAR 2024-25 BUDGET AND DECLARING THIS ORDINANCE TO BE IMMEDIATELY EFFECTIVE AS AN APPROPRIATION MEASURE. Staff requests Council approval and award of a Construction Agreement to Euro Style Management in the amount of $1,069,944 for the West Zone Reclaimed Water Tanks Rehabilitation Project. Staff also requests authorization for the City Manager or his designee to approve and pay for contract change orders for this project that could increase the contract amount by no more than 10 percent ($97,268) or a not-to-exceed total contract amount of $1,069,944. Lastly, staff requests approval of a budget adjustment to increase the project budget by $879,304 to $1,379,304, from available resources in the Wastewater Rehabilitation Fund.

CC #: 3475

File #: 0203-09

CONTACT: Inderpreet K Chaggar 916-774-5553 ikchaggar@roseville.ca.us

6.5. 60kV Circuit Breaker Replacement Project - Capital Improvement Project Approval, Sole Source Purchase Order and Budget Adjustment

Memo from Power Engineer Vincent Bottoni and Electric Utility Director Daniel Beans recommending the City Council adopt ORDINANCE NO. 6849

AUTHORIZING CERTAIN AMENDMENTS TO THE FISCAL YEAR 2024-25 BUDGET AND DECLARING THIS ORDINANCE TO BE IMMEDIATELY EFFECTIVE AS AN APPROPRIATION MEASURE. Staff requests Council approve a Capital Improvement Project creation and a sole source purchase of one Siemens circuit breaker. A sole source purchase is recommended because the City has standardized its 60kV circuit breaker fleet (over 60 currently installed) on this circuit breaker to facilitate maintenance, training and spare parts, and Roseville Electric needs to replace the circuit breaker at the Sierra Vista substation with an identical model as the foundation and wiring has been designed specifically for the Siemens SPS2 circuit breaker. Staff also requests Council approval of a budget adjustment appropriating $395,000 in the Electric Fund to the Project in order to purchase materials and perform labor to replace a 60kV circuit breaker at Pleasant Grove One substation.

CC #: 3476

File #: 0203-07

CONTACT: Vincent Bottoni 916-774-5641 vbottoni@roseville.ca.us

6.6. Fire System Services - Contract Purchase Agreement Amendment

Memo from Administrative Technician Darci Carpenter and Public Works Director Jason Shykowski recommending the City Council adopt RESOLUTION NO. 24-2 7 3 APPROVING AMENDMENT #1 TO CONTRACT PURCHASE AGREEMENT, BY AND BETWEEN THE CITY OF ROSEVILLE AND SIERRA BUILDING SYSTEMS, INC. A LOW VOLTAGE INTEGRATOR, AND AUTHORIZING THE CITY MANAGER TO EXECUTE IT ON BEHALF OF THE CITY OF ROSEVILLE (3003134). Staff requests Council approve a first amendment to the contract purchase agreement with Sierra Building Systems Inc. to increase the contract by $40,000, from $80,000 to $120,000. The requested spending increase is essential to maintaining necessary expenditures under the existing agreement for the remainder of the contract period, supporting ongoing fire systems compliance, maintenance, and the replacement of the intrusion alarm panel at Martha Riley Library. Funding for the first amendment is included in the FY2024-25 budget in the Facility Services and Facility Rehabilitation Funds.

CC #: 3464

File #: 0203-13

CONTACT: Darci Carpenter 916-774-5702 drcarpenter@roseville.ca.us

6.7. Martha Riley Library Data Center Heating, Ventilation, and Air Conditioning Replacement (RFQ 10-3386) – Contract Purchase Agreement

Memo from Buyer Tiffany Valdez and Assistant City Manager/Chief Financial Officer Dennis Kauffman recommending the City Council adopt RESOLUTION NO. 24-274 APPROVING A CONTRACT PURCHASE AGREEMENT, BY AND BETWEEN THE CITY OF ROSEVILLE AND MESA ENERGY SYSTEMS, INC. DBA EMCOR SERVICES MESA ENERGY AND AUTHORIZING THE CITY MANAGER TO EXECUTE IT ON BEHALF OF THE CITY OF ROSEVILLE (3003971). Staff requests Council approve a contract purchase agreement with Mesa Energy Systems, Inc. dba Emcor Services Mesa Energy as the lowest responsive and responsible bidder for Request for Quotation No. 10-3386,

Martha Riley Library Data Center Heating, Ventilation, and Air Conditioning Replacement. The cost of the Agreement is $585,447. Additionally, adopt a resolution authorizing the City Manager to sign the Contract Purchase Agreement and authorizing the Public Works Director or designee to approve change order requests for this project up to 10% ($58,544.70) as a construction contingency, for a grand total of $643,991.70. The FY2021-22 Riley Library - Facilities Rehabilitation project is funded primarily by the Facility Rehabilitation Fund, which receives its funding from the General Fund. Other funding sources include the Water Rehabilitation Fund, Wastewater Rehabilitation Fund, Solid Waste Rehabilitation Fund, and the Electric Fund.

CC #: 3465

File #: 0203-04

CONTACT: Tiffany Valdez 916-746-1109 tvaldez@roseville.ca.us

Resolutions

6.8. Power Transaction - Enabling Agreement

Memo from Electric Resource Planner Glenn Hoffman and Electric Utility Director Daniel Beans recommending the City Council adopt RESOLUTION NO. 24-277 APPROVING AN AGREEMENT, BY AND BETWEEN THE CITY OF ROSEVILLE AND UNITED STATES OF AMERICA, DEPARTMENT OF ENERGY ACTING BY AND THROUGH THE BONNEVILLE POWER ADMINISTRATION, AND AUTHORIZING THE CITY MANAGER TO EXECUTE IT ON BEHALF OF THE CITY OF ROSEVILLE. Staff requests Council approval of an agreement to Enable Future Purchases, Sales and Exchanges of Power and Other Services (Enabling Agreement) with Bonneville Power Administration for wholesale power transactions. There is no fiscal impact associated with the execution of the Enabling Agreement.

CC #: 3467

File #: 0800-03

CONTACT: Glenn Hoffman 916-746-1670 ghoffman@roseville.ca.us

6.9. Vista Oaks Subdivision Located in Rocklin - Summary Vacation of Public Utility Easement

Memo from City Engineer Marc Stout and Development Services Director Mike Isom recommending the City Council adopt RESOLUTION NO. 24-2 7 8 ORDERING SUMMARY VACATION OF A PUBLIC UTILITY EASEMENT. Staff requests Council approve the vacation of the easement as described therein and authorize the City Manager to execute any documents, including a quitclaim deed, required to effectuate the conveyance of the vacated easement to the respective property owners if requested by their title company. These actions have no fiscal impact to the City's General Fund.

CC #: 3469

File #: 1002-06

CONTACT: Marc Stout 916-774-5482 mstout@roseville.ca.us

6.10. Waste Services Cost-of-Service Study – Professional Services Agreement

Memo from Environmental Utilities Business Analyst Joseph Barrow and Environmental Utilities Director Richard Plecker recommending the City Council adopt RESOLUTION NO. 24-280 APPROVING A PROFESSIONAL SERVICES AGREEMENT, BY AND BETWEEN THE CITY OF ROSEVILLE AND R3 CONSULTING GROUP, INC., AND AUTHORIZING THE CITY MANAGER TO EXECUTE IT ON BEHALF OF THE CITY OF ROSEVILLE. Staff requests Council approve a professional services agreement with R3 Consulting Group, Inc. for a utility rate study for waste services in the amount of $79,850. Funding is from the available resources in the Environmental Utilities Department's FY2024-25 annual budget in the Waste Services Operations Fund.

CC #: 3472

File #: 0203-09

CONTACT: Joseph Barrow 916-746-1732 jlbarrow@roseville.ca.us

6.11. Engage, Empower, Implement Program - Grant Application

Memo from Economic Development Analyst Gina McColl and Economic Development Director Melissa Anguiano recommending the City Council adopt RESOLUTION NO. 24-282 APPROVING A GRANT APPLICATION TO THE SACRAMENTO AREA COUNCIL OF GOVERNMENTS FOR THE ENGAGE, EMPOWER, IMPLEMENT PROGRAM, AND AUTHORIZING THE CITY MANAGER OR HIS DESIGNEE TO EXECUTE ALL RELATED FORMS AND AGREEMENTS ON BEHALF OF THE CITY OF ROSEVILLE. Staff requests Council approve an application to the Sacramento Area Council of Governments for the Engage, Empower, Implement Program Grant and to execute the necessary application, standard agreement and relevant documents. The grant funds would be used to implement next steps resulting from the City's involvement with the Invest Health Partnership's City Health Dashboard Data Challenge grant in partnership with Health Education Council and its affiliates to advance workforce development and economic vitality in support of the City's Economic Development Strategic Plan. The recommended action does not impact the City's General Fund.

CC #: 3474

File #: 0110 & 0214

CONTACT: Gina McColl 916-774-5452 gmccoll@roseville.ca.us

Ordinances (for introduction and adoption - appropriation/urgency measures)

6.12. Church Street and Pump Station 26 Collection System Improvements Project – Professional Services Agreement and Budget Adjustment

Memo from Assistant Engineer William Montz and Environmental Utilities Director Richard Plecker recommending the City Council adopt RESOLUTION NO. 24-279 APPROVING A PROFESSIONAL SERVICES AGREEMENT, BY AND BETWEEN THE CITY OF ROSEVILLE AND INFERRERA CONSTRUCTION MANAGEMENT GROUP, INC., AND AUTHORIZING THE CITY MANAGER TO EXECUTE IT ON BEHALF OF THE CITY OF ROSEVILLE; and adopt ORDINANCE NO. 6845 AUTHORIZING CERTAIN

AMENDMENTS TO THE FISCAL YEAR 2024-25 BUDGET AND DECLARING THIS ORDINANCE TO BE IMMEDIATELY EFFECTIVE AS AN APPROPRIATION MEASURE. Staff requests Council approval and award of a Professional Services Agreement to Inferrera Construction Management Group, Inc. to provide Construction Management Services for the Church Street and Pump Station 26 Collection System Improvements Project. The agreement amount is for a total of $642,497, which includes $445,150 for the work at Church Street funded by the Wastewater Rehabilitation Fund, and $197,347 for the work at Pump Station 26 funded by the South Placer Wastewater Authority. Staff also requests approval of a budget adjustment of $300,000 to fund the Church Street portion of the work from available resources in the Wastewater Rehabilitation Fund.

CC #: 3470

File #: 0203-09 & 0201-01

CONTACT: William Montz 916-938-0154 wlmontz@roseville.ca.us

6.13. Wastewater Industrial Pretreatment Program Update and Commercial Discharger Program Development – Professional Services Agreement and Budget Adjustment

Memo from Wastewater Utility Manager Tracie Mueller and Environmental Utilities Director Richard Plecker recommending the City Council adopt RESOLUTION NO. 24-281 APPROVING A PROFESSIONAL SERVICES AGREEMENT, BY AND BETWEEN THE CITY OF ROSEVILLE AND BROWN AND CALDWELL, AND AUTHORIZING THE CITY MANAGER TO EXECUTE IT ON BEHALF OF THE CITY OF ROSEVILLE; and adopt ORDINANCE NO. 6847 OF THE COUNCIL OF THE CITY OF ROSEVILLE AUTHORIZING CERTAIN AMENDMENTS TO THE FISCAL YEAR 2024-25 BUDGET AND DECLARING THIS ORDINANCE TO BE IMMEDIATELY EFFECTIVE AS AN APPROPRIATION MEASURE. Staff requests Council approval and award of a Professional Services Agreement to Brown and Caldwell for the Industrial Pretreatment Program Update and Commercial Discharger Program Development Project. The agreement amount is for a total of $344,023 from the Wastewater Regional Rehabilitation Fund. Staff also requests approval of a budget adjustment of $175,000 for the project, from available resources in the Wastewater Regional Rehabilitation Fund, increasing the current project budget from $275,000 to $450,000. The City will be reimbursed for approximately 35% of project costs from its partners, the South Placer Municipal Utility District and Placer County.

CC #: 3473

File #: 0203-09

CONTACT: Tracie Mueller 916-746-1812 trmueller@roseville.ca.us

6.14. Council Discretionary Funds - Budget Adjustment

Memo from Management Analyst Heather Blanco and City Clerk Carmen Avalos recommending the City Council adopt ORDINANCE NO. 6843 AUTHORIZING CERTAIN AMENDMENTS TO THE FISCAL YEAR 2024-25 BUDGET AND DECLARING THIS ORDINANCE TO BE IMMEDIATELY EFFECTIVE AS AN APPROPRIATION MEASURE. Staff request Council approval of a budget adjustment in the amount of $3,822 to carry forward unappropriated FY2023-24

Discretionary Funds for use in FY2024-25. There is no fiscal impact to the City's General Fund.

CC #: 3463

File #: 0102 & 0201-01

CONTACT: Heather Blanco 916-746-1171 hblanco@roseville.ca.us

6.15. Rex Fortune Adventure Club Facility Project - Budget Adjustment

Memo from Recreation Superintendent Rob Nakamura and Parks, Recreation & Libraries Director Jill Geller recommending the City Council adopt ORDINANCE NO. 6844 AUTHORIZING CERTAIN AMENDMENTS TO THE FISCAL YEAR 2024-25 BUDGET AND DECLARING THIS ORDINANCE TO BE IMMEDIATELY EFFECTIVE AS AN APPROPRIATION MEASURE. Staff requests Council approve a budget adjustment in the amount of $114,000, appropriating funds in the Youth Development Fund to the Adventure Club Facility - Rex Fortune Project for completion of the installation of the portable facility on the Rex Fortune Elementary School campus. A $637,500 project was approved and funded on September 7, 2022 to purchase and install a modular building in partnership with the Center Unified School District for the purpose of providing Adventure Club services. Additional funds are required for unplanned Division of State Architect's expenses for permitting and inspection requirements, fees for a lot line adjustment between the Center Unified School District and the City, and unplanned expenses for underground utility and asphalt preparation and surfacing. This budget adjustment will increase the total project budget to $751,500. The building is expected to be completed and open for business for the 2024-25 school year. There are available resources in the Youth Development Fund for this project.

CC #: 3468

File #: 0704 & 0201-01

CONTACT: Rob Nakamura 916-774-5135 rnakamura@roseville.ca.us

Ordinances (for second reading and adoption)

6.16. Second Reading - Roseville Municipal Code Amendment - Massage Services

ORDINANCE NO. 6846 AMENDING CHAPTER 9.10 OF TITLE 9 OF THE ROSEVILLE MUNICIPAL CODE REGARDING MASSAGE SERVICES, for second reading and adoption.

CC #: 3471

File #: 0323

CONTACT: Erika Broussard 916-746-1069 embroussard@roseville.ca.us
Josh Simon 916-774-5059 jsimon@roseville.ca.us
Travis Cochran 916-774-5325 tecochran@roseville.ca.us

Members of the public requested the item to be removed for discussion.

Katie Ochoa spoke in support of the item.

Amy Franklin requested exemption for massage entities that are already in business with no issues.

Lauren McLachlan requested postponement of item in order to receive input from stakeholders.

Jody McComas spoke on concerns regarding California Massage Therapy Council certification requirement by the City.

James Malley spoke in support of grandfathering practitioners that have been in business and in support of the City meeting with stakeholders.

Deputy City Attorney Travis Cochran responded.

Motion by Krista Bernasconi, seconded by Pauline Roccucci, to adopt ORDINANCE NO. 6846 AMENDING CHAPTER 9.10 OF TITLE 9 OF THE ROSEVILLE MUNICIPAL CODE REGARDING MASSAGE SERVICES. The Motion Passed.

Roll call vote: Ayes: Alvord, Bernasconi, Houdesheldt, Mendonsa, Roccucci

Reports / Requests

6.17. Annual Audit Reports for the Fiscal Year Ended June 30, 2023 - Environmental Utilities Enterprise Funds, Other Post-Employment Benefit Trust Fund, and Roseville Natural Gas Financing Authority

Memo from Accounting Manager Teri Quinlan and Assistant City Manager/Chief Financial Officer Dennis Kauffman recommending the City Council receive three informational financial reports for the fiscal year ended June 30, 2023, along with four required auditor communication letters. There is no impact to the City's General Fund.

CC #: 3461

File #: 0202

CONTACT: Teri Quinlan 916-774-5316 tquinlan@roseville.ca.us

END OF CONSENT CALENDAR

7. APPOINTMENTS

7.1. Library Board and Senior Commission - Unscheduled Vacancy Appointments

Memo from City Clerk Technician Katrina Six and City Clerk Carmen Avalos recommending the City Council appoint one (1) individual to the Library Board to a term expiring December 31, 2026 from the applications received from: Barbara Fullmer and Vicki Whitlock; and appoint one (1) individual to the Senior Commission to a term expiring December 31, 2024 from the applications received

from: Sheri Kimbro, Shyan Lee, and Hannah Wagner.

CC #: 3479

File #: 0103 & 0103-04-03 & 0103-12-03

CONTACT: Katrina Six 916-774-5267 kmsix@roseville.ca.us

Assistant City Clerk Helen Dreyer made the presentation to the City Council.

Murial Moore spoke on vacancy on the Senior Commission for over 6 months.

Motion by Scott Alvord, seconded by Pauline Roccucci, to appoint Barbara Fullmer to the Library Board to a term expiring December 31, 2026; and to appoint Shyan Lee to the Senior Commission to a term expiring December 31, 2024. The Motion Passed.

Roll call vote: Ayes: Alvord, Bernasconi, Houdesheldt, Mendonsa, Roccucci

8. SPECIAL REQUESTS/REPORTS/PRESENTATION

8.1. Council Discretionary Funds - CalAsian Foundation

Memo from Executive Assistant Heather Blanco and City Clerk Carmen Avalos requesting the City Council consider a request for $500 from Council Discretionary Funds for the CalAsian Foundation for their 2nd annual Pickleball Tournament. The balance remaining in the Council's Discretionary Funds for FY2024-25 is $18,821. There is no fiscal impact to the City's General Fund.

CC #: 3477

File #: 0102

CONTACT: Heather Blanco 916-746-1171 hblanco@roseville.ca.us

City Clerk Carmen Avalos made the presentation to the City Council.

Johnnise Foster-Downs responded to City Council questions.

Motion by Scott Alvord, seconded by Krista Bernasconi, to approve sponsorship for the CalAsian Foundation for the 2nd annual Pickleball Tournament in the amount of $500. The Motion Passed.

Roll call vote: Ayes: Alvord, Bernasconi, Mendonsa

Nays: Houdesheldt, Roccucci

8.2. Summary of Federal, State, and Local Marijuana and Hemp Laws

Memo from Deputy City Attorney Travis Cochran and Assistant City Manager Ryan DeVore recommending the City Council receive a presentation regarding the history and current status of federal and state laws for marijuana and hemp, what the City has done to regulate marijuana, and a loophole in federal law that makes

regulation of intoxicating hemp products challenging. A presentation regarding this information was requested by a majority of the City Council during its May 1, 2024 meeting.

CC #: 3478

File #: 0500

CONTACT: Ryan DeVore 916-774-5362 rdevore@roseville.ca.us
Travis Cochran 916-774-5325 tecochran@roseville.ca.us

Assistant City Manager Ryan Devore made the presentation to the City Council.

Deputy City Attorney Travis Cochran continued the presentation to the City Council.

Carrie Welch spoke in support of regulated cannabis sales.

Devon Wardlow spoke in support of regulated cannabis sales.

Murial Moore spoke on holding violators accountable.

Council consensus to review topic after legislature concludes.

For information only. No action taken.

9. COUNCIL REPORTS / PUBLIC COMMENTS

No public comment received.

Sacramento Valley Basin Air Pollution Control Council - Councilmember Scott Alvord reported on grant received.

Economic Development Advisory Committee - Councilmember Scott Alvord reported on recent appointment, new member.

Councilmember Scott Alvord reported on various community events.

Vice Mayor Krista Bernasconi reported on various community events.

Councilmember Pauline Roccucci reported on various community events.

Northern California Power Agency Meeting - Councilmember Pauline Roccucci reported on attendance.

Councilmember Tracy Mendonsa reported on various community events.

Mayor Bruce Houdesheldt reported on various community events.

10. ADJOURNMENT

Mayor Bruce Houdesheldt adjourned the meeting at 8:10 p.m.

COUNCIL COMMUNICATION

CC #: 3488
File #: 0704-01

Title: Mahany Park Backstop #4 Repair - Award of Contract
Contact: Kelly Appier 916-774-5927 ksappier@roseville.ca.us

Meeting Date: 8/21/2024
Item #: 7.2.

RECOMMENDATION TO COUNCIL

Staff recommends that the City Council:

1. Award the Mahany Park Backstop #4 Repair Project to apparent low bidder, B&M Builders, Inc.;
2. Adopt a resolution to authorize the City Manager to execute the agreement with B&M Builders, Inc in the amount of $115,420; and
3. Authorize the City Manager or his designee to approve change order requests in an amount not to exceed 10% of the contract price in accordance with the terms and conditions of the agreement.

BACKGROUND

During the winter storms of 2023, four of the ten vertical steel posts of the backstop shifted and became out of plumb. Based on a structural engineer assessment, it was recommended these be replaced. Detailed plans were developed to address structural concerns in order to ensure overall safety. As part of the project, accessibility upgrades are required and include adding an accessible walkway, leveling uneven surfaces, and ensuring ADA compliance associated with the restroom.

City Council approved the plans and specifications and authorized the call for bids at the December 6, 2023 meeting. Bids were opened on July 9, 2024, and staff received four bids for the project. The bid results are as follows:

Bidder	Total Grand Bid Price
B&M Builders, Inc.	$115,420
Designs-Build, Inc.	$173,786
Swierstok Enterprise, Inc.	$198,000

Carter Kelly, Inc. $181,860

Engineer's Estimate $195,000

(No bid alternatives were included in the plans)

Staff, therefore, recommends award of the bid for a total contract award amount of $115,420 to B&M Builders, Inc.

FISCAL IMPACT

Funding for the Mahany Park Backstop Repairs project was approved during the FY2024-25 budget in the Citywide Park Fund and is anticipated to be reimbursed 75% by the Federal Emergency Management Agency (FEMA), 18.75% by the State, and ultimately be 6.25% City funded. There will be no increase in maintenance costs.

ENVIRONMENTAL REVIEW

The proposed project involves the repair of an existing facility. This activity is categorically exempt from CEQA as a Class 1 Exemption (State CEQA Guidelines Section 15301). The Exemption has been prepared and no further CEQA action is required.

CITY COUNCIL STRATEGIC PLAN/OVERARCHING GOALS

Goal B – Support community engagement and advocacy
Goal C – Maintain a safe and healthy community
Goal E – Deliver exceptional city services
Goal F – Invest in well-planned infrastructure and growth

Respectfully Submitted,

Kelly Appier, Park Development Project Manager

Jill Geller, Parks, Recreations, and Libraries Director

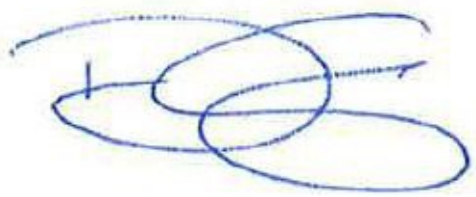

_____
Dominick Casey, City Manager

ATTACHMENTS:

Description

Vicinity Map

Resolution 24-289

Agreement

CEQA Exemption

Bid Summary

Mahany Park

Vicinity Map

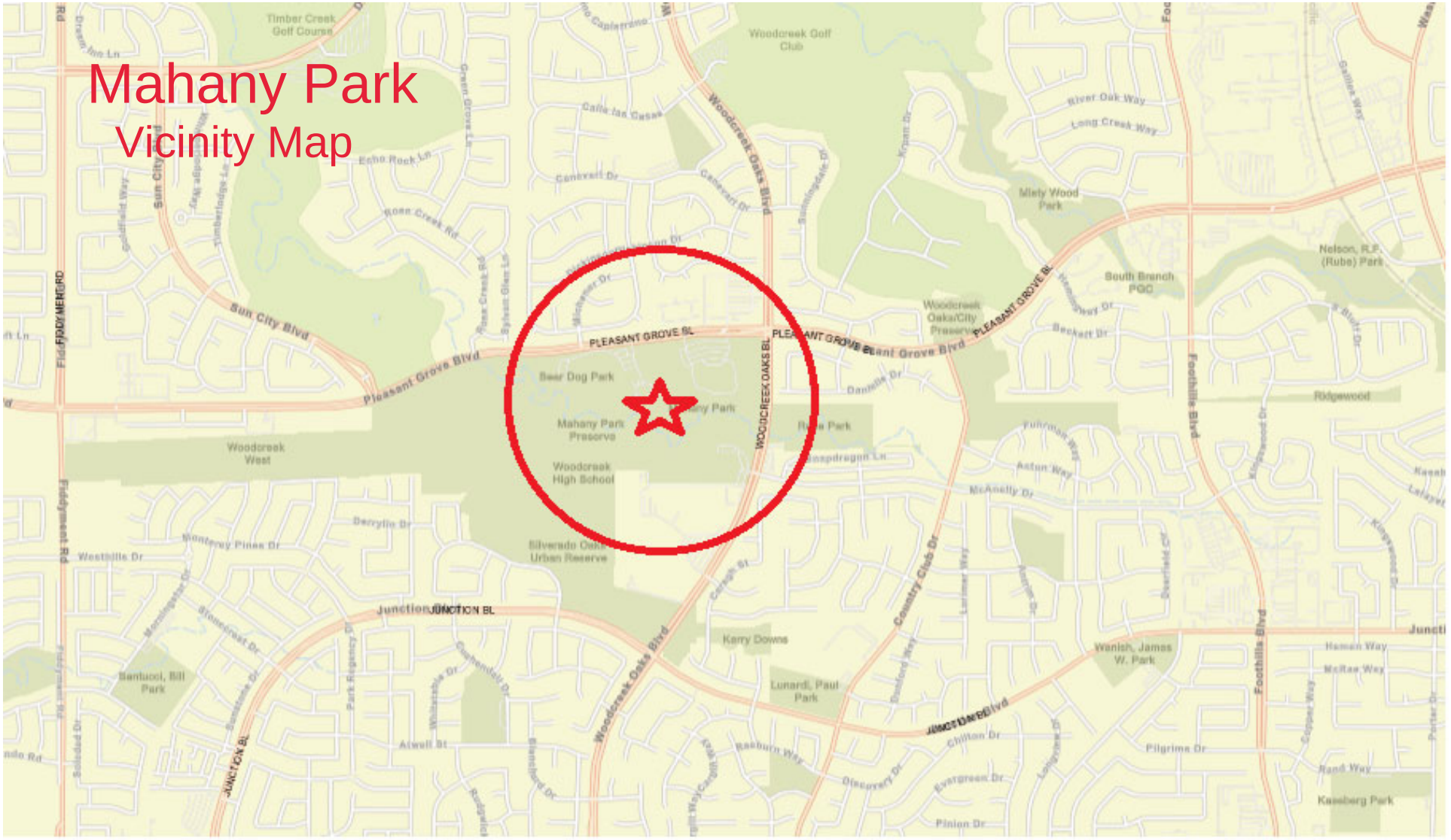

RESOLUTION NO. 24-289

APPROVING AN AGREEMENT, BY AND BETWEEN THE CITY OF ROSEVILLE AND B&M BUILDERS, INC., AND AUTHORIZING THE CITY MANAGER TO EXECUTE IT ON BEHALF OF THE CITY OF ROSEVILLE

WHEREAS, an Agreement for the Mahany Park Backstop #4 Repair project, by and between the City of Roseville and B&M Builders, Inc., has been reviewed by the City Council; and

NOW, THEREFORE, BE IT RESOLVED by the Council of the City of Roseville that said Agreement is hereby approved and that the City Manager is authorized to execute it on behalf of the City of Roseville.

BE IT FURTHER RESOLVED that the City Manager or his designee is authorized to approve change orders for the project, consistent with the contract terms, provided that the net cost of all change orders shall not exceed ten percent (10%) of the contract price.

PASSED AND ADOPTED by the Council of the City of Roseville this____day of _____, 2024, by the following vote on roll call:

AYES COUNCILMEMBERS:

NOES COUNCILMEMBERS:

ABSENT COUNCILMEMBERS:

_____
MAYOR

ATTEST:

_____
City Clerk

AGREEMENT

THIS AGREEMENT, is made and entered into this _____ day of _____, 20_____, by and between the City of Roseville, a municipal corporation, ("CITY"), and B&M Builders, Inc, a California Corporation, ("CONTRACTOR"); and

WITNESETH:

WHEREAS, the City Council of the CITY, at a meeting held on the 6th day of December, 2023, approved plans and specifications for the Mahany Park Backstop #4 Repair and directed the City Clerk to advertise for sealed proposals for doing said work and providing that bids be submitted on the 9th day of July, 2024; and

WHEREAS, the City Clerk, thereafter duly and regularly caused a notice to be published in the manner and for the time prescribed by law; and

WHEREAS, CONTRACTOR, pursuant to the provisions of said notice duly filed a bid with the City Clerk, a true copy of which bid is now on file in the office of the City Clerk, and is hereby referred to and by this reference made a part hereof as fully as if set forth at length herein; and

WHEREAS, all bids received pursuant to said notice were opened and examined and publicly declared at the time specified in said advertisement for bids and at a meeting of the City Council held on the _____ day of _____, 20_____, the Council found and

declared the bid of CONTRACTOR to be the lowest responsible bid and thereupon awarded a contract to CONTRACTOR to do the work referred to in the aforementioned specifications.

NOW, THEREFORE, the parties agree as follows:

1. THE WORK. CONTRACTOR agrees:

a. To do the work and furnish all the labor, materials, tools, supplies, equipment, superintendence, insurance, and bonds required for the Mahany Park Backstop #4 Repair in accordance with the Contract Documents (the Work).

b. To do and perform the Work contemplated hereby in a good and workmanlike manner under the direction of and to the satisfaction of the Director of Public Works of the City of Roseville.

2. PAYMENT. CITY shall pay CONTRACTOR One hundred fifteen thousand four hundred twenty dollars and no/100 dollars ($ 115,420.00) for the Work to be done under this Agreement in accordance with the Contract Documents.

3. CONTRACT DOCUMENTS. The complete Agreement between the parties hereto consists of the following documents:

a. The advertisement for bids (including the notice to bidders, instructions to bidders and proposals);

b. The accepted bid;

c. Plans and specifications (including general conditions, supplemental conditions, special provisions and construction details);

d. Bonds and insurance required by the specifications; and

e. This contract.

All documents specified above are intended to operate so that any work called for in any one and not mentioned in the other, or vice versa, is to be executed the same as if mentioned in all said documents.

4. LIQUIDATED DAMAGES. In the event CONTRACTOR does not complete the Work within the time specified, CONTRACTOR agrees that CITY will suffer damages. Inasmuch as the actual damages which would result from such breach by CONTRACTOR under this Agreement are uncertain, and would be impractical or extremely difficult to fix, CONTRACTOR agrees that it shall pay, or CITY shall deduct from CONTRACTOR's fee, the amount of $ 800 per day as liquidated damages, in the event of such delay.

5. TIME OF COMPLETION. Time is of the essence of this Agreement. CONTRACTOR shall complete all Work under the Contract Documents within 35 Days of the date of this Contract. CONTRACTOR shall begin work by the date specified in the "Notice to Proceed" letter and shall diligently prosecute all of the Work under this Contract in all parts and requirements as defined in the Contract Documents.

6. SERVICE OF NOTICE. Any notice required or permitted to be given under this Agreement shall be deemed given when (a) personally delivered to the recipient identified below; (b) mailed by registered or certified mail, return receipt requested, postage pre-paid, to the address specified below; or (c) sent by facsimile, with confirmation of receipt, to the facsimile number identified below.

CITY OF ROSEVILLE	CONTRACTOR
Jill Geller	Patrick Mullen
Parks, Recreation & Libraries Director	B&M Builders, Inc
316 Vernon Street, Suite 400	11330 Sunrise Park Dr. Ste C
Roseville, CA 95678	Rancho Cordova, CA 95742

CITY may also act through either its architect or construction manager if CITY expressly gives notice to CONTRACTOR, in writing, that CITY's designee has authority to act for CITY in a specific capacity.

7. DISPUTES. Disputes arising from this Agreement will be determined in accordance with the Contract Documents and Public Contract Code Sections 10240-10240.13.

8. GOVERNING LAW. This Agreement shall be governed by and construed in accordance with the laws of the State of California.

9. INDEPENDENT CONTRACTOR. CONTRACTOR shall act as an independent contractor, and covenants and agrees that it will conduct itself consistent with such status, that it will neither hold itself out as, nor claim to be, an officer or employee of CITY by reason of this Agreement.

10. SUCCESSORS IN INTEREST. This Agreement shall be binding upon the heirs, successors, executors, administrators and assigns of the respective parties hereto.

11. MODIFICATION. This Agreement and each provision contained herein may be waived, amended, supplemented or eliminated only by mutual written agreement of the parties.

12. SEVERABILITY. If any of the provisions contained in this Agreement are for any reason held invalid or unenforceable, such holding shall not affect the remaining provisions or the validity and enforceability of the Agreement as a whole.

13. INTEGRATED AGREEMENT. This is an integrated agreement and contains all of the terms, considerations, understanding and promises of the parties. It shall be read as a whole.

14. CONTRACTORS LICENSE LAW. CONTRACTORS ARE REQUIRED BY LAW TO BE LICENSED AND REGULATED BY THE CONTRACTORS' STATE LICENSE

BOARD WHICH HAS JURISDICTION TO INVESTIGATE COMPLAINTS AGAINST CONTRACTORS IF A COMPLAINT REGARDING A PATENT ACT OR OMISSION IS FILED WITHIN FOUR (4) YEARS OF THE DATE OF THE ALLEGED VIOLATION. A COMPLAINT REGARDING A LATENT ACT OR OMISISON PERTAINING TO STRUCUTRAL DEFECTS MUST BE FILED WITHIN TEN (10) YEARS OF THE DATE OF THE ALLEGED VIOLATION. ANY QUESTIONS CONCERNING A CONTRACTOR MAY BE REFERRED TO THE REGISTRAR, CONTRACTORS' STATE LICENSE BOARD, P.O. BOX 26000, SACRAMENTO, CALIFORNIA 95826.

IN WITNESS WHEREOF, the City of Roseville, a municipal corporation, has authorized the execution of this Agreement in duplicate by its City Manager and attestation by its City Clerk under authority of Resolution No. _____, adopted by the Council of the City of Roseville on the ____day of _____, 20_____, and CONTRACTOR has caused this Agreement to be duly executed.

CITY OF ROSEVILLE, a municipal corporation

BY:_____
DOMINICK CASEY
City Manager

ATTEST:

BY:_____
CARMEN AVALOS
City Clerk

B&M Builders, Inc., a California Corporation

BY: Patrick Mullen
its: President

and

BY: Patrick Mullen
its: Secretary

APPROVED AS TO FORM:

BY: _____
MICHELLE SHEIDENBERGER
City Attorney

APPROVED AS TO SUBSTANCE:

BY: Jill Geller

Print Name: Jill Geller

Title: Parks, Recreation & Libraries Director

Notice of Exemption

To: Placer County Clerk
Recorder's Office
2954 Richardson Drive
Auburn, CA 95603

From: City of Roseville
Development Services Dept.
311 Vernon Street
Roseville, CA 95678

Project Title: Mahany Park Field #4 Backstop Repair

Project Location(s): 1545 Pleasant Grove Boulevard, (APN: 477-110-005-000) City of Roseville, CA.

Project Description: The Parks, Recreation and Libraries Department proposes repair four of the ten vertical steel columns of the backstop at Field #4, which were damaged during the winter storms of 2023. The repair will involve cutting the columns and splicing new columns on. The footings/piers of the existing columns will be expanded by digging around them, reinforcing with re-bar, then pouring new concrete. The existing wire fabric and backboards will be re-used. The scope of work will also include accessibility upgrades of adding a walkway, leveling uneven surfaces, and re-locating bathroom amenities.

Public Agency Approving Project: Roseville City Council

Agency/Individual Carrying Out Project: City of Roseville Park, Recreation and Libraries Department

Reason why this Project is Exempt: This project qualifies for a Class 1 Exemption as described in Section 15301 of the California Environmental Quality Act (CEQA) guidelines which states:

> "Class 1 consists of the… repair… of existing public or private structures…, ….involving negligible or no expansion of use beyond that previously existing…. examples include but are not limited to: (d) Restoration or rehabilitation of deteriorated or damaged structures, facilities, or mechanical equipment to meet current standards of public health and safety…"

The project involves the repair of an existing backstop that was damaged by storms to ensure its safety. It will have the same purpose and capacity as the existing backstop. Therefore, the Class 1 Exemption is applicable to the proposed project.

Lead Agency Contact Person: Kelly Appier, Park, Recreation and Libraries Department, 316 Vernon Street, Roseville, CA 95678. 916-774-5927.

Signature: Jessica Lynch Date: 9-20-2023

Jessica Lynch, Environmental Coordinator
City of Roseville

IFB # 13-139

DATE: July 9, 2024

TIME: 3:00 PM

BID BOND REQUIRED: Yes

BID SUMMARY SHEET

BID OPENING FOR:

Mahany Park Backstop #4 Storm Repair

CITY OF ROSEVILLE CALIFORNIA

Bidders Name City, State	Addendum 1	Addendum 2	Bid Bond	Grand Total
DESIGNS-BUILD INC. SACRAMENTO, CA	✓	✓	✓	$ 173,786.00
B+M Builders Inc Rancho Cordova, CA	✓	✓	✓	$ 115,420.00
Swierstok Enterprise Inc ORANGEVALE, CA	✓	✓	✓	$ 198,000.00
Carter Kelly Inc Placerville, CA	✓	✓	✓	$ 181,860.00

Please Sign-In

Staff	*Visitors (Name & Company)*	*Visitors (Name & Company)*
Melissa Lipp		
Kelly Appler		
My Tien Doan		
Joshua Cervantes		

COUNCIL COMMUNICATION

CC #: 3500
File #: 0704-01

Title:	Woodcreek Golf Course Bunker Renovation Project - Contract Purchase Agreement
Contact:	Rob Nakamura 916-774-5135 rnakamura@roseville.ca.us

Meeting Date: 8/21/2024
Item #: 7.3.

RECOMMENDATION TO COUNCIL

Staff recommends that the City Council adopt a resolution to approve a contract purchase agreement (3004012) with Landscapes Unlimited, LLC for the Woodcreek Golf Course Bunker Renovation Project in an amount not to exceed $1,048,000 and authorize the City Manager to execute the agreement.

BACKGROUND

Woodcreek Golf Course was designed by Robert Muir Graves and opened in 1995. After 29 years since the original construction, the sand bunkers have been failing to drain providing a sub-standard product. The purpose of this project is to renovate and rebuild existing sand bunkers and to eliminate several sand bunkers to improve conditions and playability for all levels of golfers. The renovation design provided by Kevin Norby Golf Course Design considers bunker locations, shape, size, drainage, liners, surrounding sod and irrigation. Overall, the square footage of bunkers will be reduced by approximately 30% of the existing layout which will improve golf course conditions and playability while reducing future maintenance expense.

On May 15, 2024, the Parks, Recreation & Libraries (PRL) Department issued a request for proposals for the Woodcreek Golf Course Bunker Renovation Project, RFP 13-150. After the evaluation of proposals and contractor interviews, the contract was awarded to Landscapes Unlimited, LLC to complete the first phase of the plan design. The project timeline to complete the scope of work agreed upon will begin in late August 2024 and is scheduled for completion in early November 2024. Woodcreek Golf Course will remain open for play throughout the duration of the project; however, temporary greens or tees (as applicable) will be used when areas of the golf course are under construction. Only two to three holes will be under construction at the same time in effort to minimize impacts to golfers throughout the duration of the project.

FISCAL IMPACT

The total contract shall not exceed $1,048,000, to include the original contract price of $1,040,000

and estimated change orders of up to $8,000. Two approved projects have available resources to complete the renovations and repairs. Staff will return to Council to recommend a budget adjustment consolidating the two project budgets. The current CIP projects for the Woodcreek Golf Course Facility Renovations and Restoration Project and the Woodcreek Golf Club Bunker Renovation Project are funded within the Golf Course Fund, with no additional impacts on the General Fund.

ENVIRONMENTAL REVIEW

The proposed project involves the repair and minor alteration of an existing facility. This activity is categorically exempt from CEQA as a Class 1 Exemption (State CEQA Guidelines Section 15301). The Exemption has been prepared and no further CEQA action is required.

CITY COUNCIL STRATEGIC PLAN/OVERARCHING GOALS

Goal D – Enhance economic vitality
Goal E – Deliver exceptional city services
Goal F – Invest in well-planned infrastructure and growth

Respectfully Submitted,

Rob Nakamura, Recreation Superintendent

Jill Geller, Parks, Recreation & Libraries Director

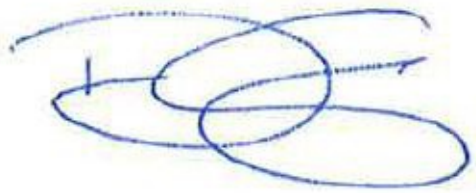

_____
Dominick Casey, City Manager

ATTACHMENTS:

Description

Resolution 24-298

Contract Purchase Agreement

CEQA NOE

RESOLUTION NO. 24-298

APPROVING A CONTRACT PURCHASE AGREEMENT, BY AND BETWEEN THE CITY OF ROSEVILLE AND LANDSCAPES UNLIMITED, LLC AND AUTHORIZING THE CITY MANAGER TO EXECUTE IT ON BEHALF OF THE CITY OF ROSEVILLE

WHEREAS, contract purchase agreement (3004012) for the Woodcreek Golf Course Bunker Renovation project, by and between the City of Roseville and Landscapes Unlimited, LLC, has been reviewed by the City Council; and

NOW, THEREFORE, BE IT RESOLVED by the Council of the City of Roseville that said contract purchase agreement is approved and that the City Manager is authorized to execute it on behalf of the City of Roseville.

PASSED AND ADOPTED by the Council of the City of Roseville this____day of _____, 2024, by the following vote on roll call:

AYES COUNCILMEMBERS:

NOES COUNCILMEMBERS:

ABSENT COUNCILMEMBERS:

_____
MAYOR

ATTEST:

_____
City Clerk

Contract Purchase Agreement 3004012

Supplier Details:

Company	Landscapes Unlimited LLC
Contact	Roy Wilson
Address	1201 Aries Dr
	Lincoln, NE 68512

Submit your response to:

Company	City of Roseville
Contact	Joanna Oukrop
Address	Purchasing Division
	311 Vernon St
	Roseville, CA 95678
Phone	(916) 746-1102
Fax	(916) 746-1115
E-mail	JOukrop@roseville.ca.us

This Contract Purchase Agreement is sent for your review and acceptance. Notify the Buyer via email of any needed changes to the company name, address, and contact information. The Buyer will update the agreement prior to you signing the document.

Return signed copies of the agreement to the Buyer noted on the agreement. Alterations or modifications to the agreement are not allowed. Upon receipt of all necessary documents, the City will sign the agreement and return a fully executed copy to you. Receipt of the signed copy will be your notice to proceed with the work in accordance with the terms and conditions of the agreement. Work must not begin until the contract has been fully executed.

The following guidelines must be followed for the signature block on the agreement:

Sole proprietorship - **By owner**

Partnership - **Any general partner**

Corporation - **Two options:**
(1) A signature from the President and the corporate seal; **OR**
(2) One signature from the Chairman of the Board, President, or any Vice President **AND** one signature from the Secretary, any Assistant Secretary, Chief Financial Officer, or any Treasurer or Assistant Treasurer of the corporation

*General Manager, Office Manager and/or Sales Manager are **not** corporate officer titles. The agreement will be rejected if not signed in accordance with these guidelines.

Insurance requirements:
The City's insurance requirements are referenced on Attachment A of the agreement. By signing the agreement, you are confirming that your company has the minimum insurance limits required.

CITY OF ROSEVILLE CALIFORNIA

Contract Purchase Agreement 3004012

Agreement	3004012
Agreement Date	19-JUL-2024
Revision	0
Agreement Amount	1,040,000.00 USD

Invoice To
City of Roseville
Accounts Payable
311 Vernon St
ROSEVILLE CA 95678
Phone: (916) 774-5488
Fax: (916) 784-3796
Email: accountspayable@roseville.ca.us

Supplier
Landscapes Unlimited LLC
1201 Aries Dr

Lincoln, NE 68512
Phone: (402) 423-6653
Fax: (402) 423-4487
Email: rwilson@landscapesunlimited.com

Description of Labor, equipment and/or materials

The vendor shall provide the services called for under the City of Roseville Request for Proposal (RFP) #13-150 and vendor's proposal thereto titled "Woodcreek Golf Course - Bunker Renovation Project" (herein after "Proposal"). The terms and scope of work of the City of Roseville RFP# 13-150 and vendor's proposal are herein made part of this Contract Purchase Agreement and fully incorporated by reference. The attached Landscapes Unlimited LLC "Woodcreek Golf Course - Reduced Bunker Reno - Revised Scope" dated 7/8/24 and the attached "Woodcreek Golf Club Bunker Project Reduced Scope Rev 2 Start date 8/22/24 Preliminary Schedule" shall replace the scope of work and preliminary schedule from the original proposal submittal.

START DATE: Executed Agreement
END DATE: Upon payment of final invoice

Contact Shelby Craig in the Parks, Recreation, & Libraries Department at (916) 746-1253 or scraig@roseville.ca.us for questions regarding this agreement.

Customer #	Supplier #	Payment Terms	Freight Terms	FOB	Shipping Method
	16170	**Net 30**	**Freight on Board at the destination**	**Destination**	**Best Method**

Start Date	End Date	Confirm To
		Joanna Oukrop Phone **1-916-746-1102**

Attention: Total Cost not to exceed the agreement amount without prior approval of the Purchasing office.

Contract Terms and Conditions

1. To the fullest extent allowed by law, Contractor shall defend, indemnify, and save and hold harmless the City, its officers, agents, employees and volunteers from any claims, suits or actions of every name, kind and description brought forth, or on account of, injuries to or death of any person (including but not limited to workers and the public), or damage to property, resulting from or arising out of Contractor's willful misconduct or negligent act or omission while engaged in the performance of obligations or exercise of rights created by this Agreement, except those matters arising from City's sole or active negligence or willful misconduct. The parties intend that this provision shall be broadly construed. Contractor's responsibility for such defense and indemnity obligations shall survive the termination or completion of this Agreement for the full period of time allowed by law. The defense and indemnity obligations of this Agreement are undertaken in addition to, and shall not in any way be limited by, the insurance obligations contained in this Agreement.

2. Contractor is an independent contractor, and shall not be considered an officer, agent, or employee of the City.

3. Without the written consent of the City, this Agreement is not assignable by Contractor either in whole or in part.

4. Time is of the essence of this Agreement.

5. At any time during the term of this Agreement, the City has the right to terminate this Agreement, provided Contractor is given thirty (30) days written notice. City's termination shall be without further liability to City; however, Contractor shall be entitled to all costs reasonably incurred prior to the date of termination. Contractor acknowledges that City may terminate this Agreement should funds not be appropriated by its governing body to continue services under this Agreement.

6. This Agreement may only be amended or modified in writing. It is integrated and contains the complete understanding of the parties.

7. All equipment, supplies and services sold to the City of Roseville shall conform to the general safety orders of the State of California.

8. Unless notified to the contrary, in writing, the City assumes that the Contractor has accepted the work in accordance with the plans and specifications (if any) and agrees to do the work in compliance with this Agreement.

9. All prevailing wages and fair employment practices must be adhered to. For prevailing wage contracts over $25,000, copies of certified payroll must be submitted with invoices. Prevailing wage rates may be obtained from the State Department of Industrial Relations and/or the following website address: http://www.dir.ca.gov/dlsr/DPreWageDetermination.htm. In compliance with Labor Code Section 1773.2, as may be amended from time to time, Contractor shall cause a copy of this website to be posted at each jobsite, as applicable.

10. Contractor agrees to the below insurance requirements:

    a. Unless otherwise specified, the Contractor shall maintain the policies of insurance outlined in Attachment A, incorporated herein by this reference, in full force and effect during the term of this Agreement. The City of Roseville retains sole discretion in determining the types and proper levels of insurance

coverage.

b. Form. Contractor shall submit a certificate evidencing such coverage for the period covered by this Agreement in a form satisfactory to Risk Management and the City Attorney, prior to undertaking any work hereunder. Any insurance written on a claims made basis is subject to the approval of Risk Management and the City Attorney.

c. Additional Insureds. Contractor shall also provide a separate endorsement or section of the policy showing City, its officers, agents, employees, and volunteers as additional insureds for each type of coverage (except Workers' Compensation) and for ongoing and completed operations. Such insurance shall specifically cover the contractual liability of Contractor. The additional insured coverage under the Contractor's policy shall be primary and noncontributory, as evidenced by a separate endorsement or section of the policy, and shall not seek contribution from City's insurance or self-insurance. In addition, the additional insured coverage shall be at least as broad as the Insurance Services Office (ISO) CG 20 01 Endorsement. Any available insurance proceeds in excess of the specified minimum insurance coverage requirements and limits shall be available to the additional insureds. Furthermore, the requirements for coverage and limits shall be:

(1) the minimum coverage and limits specified in this Agreement; or
(2) the full coverage and maximum limits of any insurance proceeds available to the named insureds, whichever is greater.

d. Cancellation/Modification. Contractor shall provide thirty (30) days written notice to City prior to cancellation or modification of any insurance required by this Agreement.

e. Umbrella/Excess Insurance. The limits of insurance required in this Agreement may be satisfied by a combination of primary and excess insurance. Any excess insurance shall contain or be endorsed to contain a provision that such coverage shall also apply on a primary and noncontributory basis for the benefit of City (if agreed to in a written contract) before City's own insurance shall be called upon to protect it as a named insured.

f. Subcontractors. Contractor agrees to include in its contracts with all subcontractors the same requirements and provisions of this Agreement, including the indemnity and insurance requirements, to the extent they apply to the scope of the subcontractor's work. Furthermore, Contractor shall require its subcontractors to agree to be bound to Contractor and City in the same manner and to the same extent as Contractor is bound to City under this Agreement. Additionally, Contractor shall obligate its subcontractors to comply with these same provisions with respect to any tertiary subcontractor, regardless of tier. A copy of City's indemnity and insurance provisions will be furnished to the subcontractor or tertiary subcontractor upon request.

g. Self-Insured Retentions. All self-insured retentions (SIR) must be disclosed to Risk Management for approval and shall not reduce the limits of liability. Policies containing any SIR provision shall provide or be endorsed to provide that the SIR may be satisfied by either the named insured or City. City reserves the right to obtain a full certified copy of any insurance policy and endorsements. The failure to exercise this right shall not constitute a waiver of such right.

h. Waiver of Subrogation. Contractor hereby agrees to waive subrogation which any insurer of Contractor may acquire from Contractor by virtue of the payment

of any loss under a Workers Compensation, Commercial General Liability or Automobile Liability policy. All Workers Compensation, Commercial General Liability and Automobile Liability policies shall be endorsed with a waiver of subrogation in favor of City, its officers, agents, employees and volunteers for all work performed by Contractor, its employees, agents and subcontractors.

i. Liability/Remedies. Insurance coverage in the minimum amounts set forth herein shall not be construed to relieve Contractor of liability in excess of such coverage, nor shall it preclude City from taking such other actions as are available to it under any other provisions of this Agreement or law.

11. Contractor shall comply with all federal, state and local laws and ordinances, including but not limited to the City's storm water regulations, as may be applicable to the performance of services under this Agreement. Failure to comply with local ordinances may result in monetary fines and cancellation of this Agreement. Refer to www.roseville.ca.us/stormwater for links to more information on the City's storm water regulations.

12. In the event that the terms of any attachment or exhibit conflict with any terms of this Agreement, the terms of this Agreement shall control.

13. This Agreement may be executed in one or more counterparts, each of which shall be deemed an original, but all of which together shall constitute one and the same instrument. In the event that any signature is delivered by facsimile transmission or by e-mail delivery of a ".pdf" format data file, such signature shall create a valid and binding obligation of the party executing (or on whose behalf such signature is executed) with the same force and effect as if such facsimile or ".pdf" signature page were an original thereof.

14. If either party commences any legal action against the other party arising out of this Agreement or the performance thereof, the prevailing party in such action shall be entitled to recover its reasonable litigation expenses, including but not limited to, court costs, expert witness fees, discovery expenses, and attorneys' fees. Any action arising out of this Agreement shall be brought in Placer County, California, regardless of where else venue may lie. This Agreement shall be governed by and construed in accordance with the laws of the State of California.

15. This Agreement shall be binding upon the heirs, successors, executors, administrators and assigns of the respective parties hereto.

16. If any of the provisions contained in this Agreement are for any reason held invalid or unenforceable, such holding shall not affect the remaining provisions or the validity and enforceability of the Agreement as a whole.

17. For purposes of this Agreement, the terms "Contractor," "Consultant," and "Supplier" are used interchangeably.

18. No contractor or subcontractor may work on a public works project unless registered with the Department of Industrial Relations pursuant to Labor Code section 1725.5. During the performance of this agreement, Contractor and its subcontractors shall have a continuing legal obligation to maintain current registration with the Department of Industrial Relations. Contractor is hereby notified that this project is subject to compliance monitoring and enforcement by the Department of Industrial Relations.

19. Vehicles with a gross vehicle weight rating (GVWR) greater than 8,500 lbs. and light-duty package delivery vehicles operated in California may be subject to the California Air Resources Board (CARB) Advanced Clean Fleets regulations. Such vehicles may therefore be subject to requirements to reduce emissions and air pollutants. For more information, visit the CARB Advanced Clean Fleet webpage at https://ww2.arb.ca.

gov/our-work/programs/advanced-clean-fleets.

20. Contractor/consultant's duties and services under this agreement shall not include preparing or assisting the public entity with any portion of the public entity's preparation of a request for proposals, request for qualifications, or any other solicitation regarding a subsequent or additional contract with the public entity. The public entity entering this agreement shall at all times retain responsibility for public contracting, including with respect to any subsequent phase of this project. Contractor/consultant's participation in the planning, discussions, or drawing of project plans or specifications, if any, shall be limited to conceptual, preliminary, or initial plans or specifications. Contractor/consultant shall cooperate with the public entity to ensure that all bidders for a subsequent contract on any subsequent phase of this project have access to the same information, including all conceptual, preliminary, or initial plans or specifications prepared by contractor pursuant to this agreement.

21. Contractor must submit all claims as defined in and in accordance with the claim resolution process set forth in Section 9204 of the Public Contract Code. Each such claim must be sent to the City by registered mail or certified mail with return receipt requested and must contain reasonable documentation to support the claim. All claims must be received prior to acceptance of the work.

22. Contractor certifies that Contractor, its employees, directors, officers, agents, subcontractors, vendors, and volunteers are not presently debarred, excluded, suspended, declared ineligible, voluntarily excluded, or proposed for debarment, exclusion, suspension, or ineligibility by any federal, state, or local department or agency.

23. The Levine Act (Govt. Code, Section 84308) requires a Party (and its agent(s), if any) to a Proceeding before the City of Roseville that involves any action or consideration related to their contract, license, permit, or other entitlement for use, to disclose any campaign contributions made to City elected or appointed officers totaling more than $250 within the twelve (12) months prior to the City decision and while a proceeding is pending, and includes certain prohibitions on contribution activity thereafter. If applicable campaign contributions have been made by Contractor and/or its agent(s), Contractor is responsible for compliance, including for its disclosure obligations, if any, as further described at: https://www.roseville.ca.us/government/departments/city_clerk/transparency/levine_act.

24. This Agreement may be amended via change order, but only if such change order is made in writing, approved by the City, and signed by both parties.

25. CONTRACTOR agrees to defend and indemnify CITY if, despite the parties intent and practice, any venue, agency, or court with competent jurisdiction determines that CONTRACTOR and/or any of its agents, officers, employees, volunteers, independent contractors, or subcontractors, are characterized as employee(s) of CITY.

    CONTRACTOR and CITY agree that: (a) CONTRACTOR is free from the control and direction of CITY in connection with the performance of the work; (b) CONTRACTOR is providing services directly to CITY; (c) CONTRACTOR has and will maintain at all relevant times a business license; (d) CONTRACTOR maintains a business location that is separate from CITY; (e) CONTRACTOR is customarily engaged in an independently established business of the same nature as that involved in the work performed hereunder; (f) CONTRACTOR actually contracts with other businesses to provide the same or similar services and maintains a clientele without restrictions from CITY; (g) CONTRACTOR advertises and holds itself out to the public as available to provide the same or similar services; (h) CONTRACTOR provides its own tools, vehicles, and equipment to perform the services; (i) CONTRACTOR has negotiated its own rates; (j) CONTRACTOR set its own hours and location of work in accomplishing CITY's on-call needs; and (k) CONTRACTOR has the right to control the manner and means of accomplishing the result desired and exercises its own expert independent judgement.

The supplier named hereon by the acceptance of this order agrees to the provisions of this document titled "Contract Purchase Agreement" and all accompanying terms, conditions, and attachments.

Roseville Business License No. _____

Contractor License No. ____973614_____

DIR Registration No. ___1001048178_____

Check mark the applicable company type below:

_____ Corporation

____X____ Limited Liability Company

_____ Partnership

_____ Sole Proprietor

City Reserves the right to withhold any payments to contractor in the event of noncompliance with insurance requirements or if required by law.
Construction T&C
REV 3/21/24 JS

ATTACHMENT A
HUMAN RESOURCES/RISK MANAGEMENT DIVISION
INSURANCE REQUIREMENTS
AGREEMENT OVER FORMAL BID LIMIT OR INVOLVING HIGH RISK ACTIVITIES

General - Required Coverage/Documentation

- General Liability: $1 Million per occurrence /$2 Million aggregate
- Automobile Liability: $1 Million combined single limit
- Workers' Compensation: Statutory *Must provide a Waiver of subrogation
- Additional Insured Endorsement (AIE) - General Liability policy: CG 20 38 04 13 or an equivalent, blanket endorsement or section of the policy. Endorsement shall cover the City of Roseville, its officers, agents, employees and volunteers as additional insured.
- Policies must be primary and non-contributory
- A 30 day notice of cancellation must be provided
- List certificate holder as: The City of Roseville - Insurance Compliance, PO Box 100085-R1, Duluth, GA 30096

Additional Liability/Insurance Requirements if required by Agreement (and marked below):

Construction:_X__
General Liability:
$2 Million/occurrence
$4 Million aggregate

Design Professional:____
General Liability:
$2 Million/occurrence
$4 Million aggregate
Professional Liability:
$2 Million/occurrence

Professional Consultant:____
Professional Liability:
$1 Million/occurrence

IT Services:____
Professional Liability:
$1 Million/occurrence
No auto required
Cyber Liability:
$1 Million/occurrence

Hazardous Materials:____
Pollution Liability:
$1 Million/occurrence

Special Events/Caterers-Vendors:____
No auto required
No workers' comp required

Professional Counseling/ Psychological:____
Professional Liability:
$1 Million/occurrence
No auto required

Pyrotechnics:____
General Liability:
$5 Million/occurrence
$10 Million aggregate
Auto - $2 Million/occurrence

Chemical/Environmental:____
General Liability:
$3 Million/occurrence
$6 Million aggregate
Pollution – $2 Million/Occurrence
Auto - $2 Million/Occurrence

Insurance Submission Process

The City of Roseville Human Resources/Risk Management Department uses a service called EBIX to manage our insurance certificate tracking.

How It Works

- The vendor's contact information is entered into EBIX. EBIX will contact the vendor to request proof of insurance.
- The Vendor can forward the request to their Insurance Agent(s) if necessary.
- Vendor/Insurance Agent submits insurance to EBIX by email to roseville@ebix.com or by fax to (770) 325-5727. After faxing or emailing the certificate, please DO NOT send the certificate by mail to EBIX. Please do not mail, email or fax any certificates to the City of Roseville.
- Once submitted, EBIX reviews the insurance documentation. If there are deficiencies, EBIX will send a follow up letter or email requesting additional information.

Questions Regarding Insurance Submission: Contact EBIX at (951) 652-4239
Questions Regarding Insurance Requirements Contact Risk Management at (916) 774-5202

CALIFORNIA AIR RESOURCES BOARD REGULATION COMPLIANCE

Please indicate whether the Contractor is subject to, and/or in compliance with, the following regulations of the California Air Resources Board.

In-Use Off-Road Diesel-Fueled Fleets Regulation

1) Will vehicles subject to Cal. Code Regs., tit. 13, §§ 2449 et seq. be used for the project? This includes, but is not limited to:
   a) Vehicles with a diesel-fueled or alternative diesel fueled off-road compression-ignition engine with maximum power (max hp) of 25 horsepower (hp) or greater provided that the vehicle cannot be registered and driven safely on-road or was not designed to be driven on-road, even if it has been modified so that it can be driven safely on-road
   b) Workover rigs
   c) Certain two-engine vehicles

   Yes X **No** ____

2) If you answered "Yes" to 1), you **must** submit a valid Certificate of Reported Compliance to the City as provided in Cal. Code Regs., tit. 13, § 2449(n).

Advanced Clean Fleets Regulation

Pursuant to Cal. Code Regs., tit. 13, § 2013(i)(1), the Contractor shall submit to the City a document evidencing that it is listed on the CARB Advanced Clean Fleets webpage as a compliant fleet **OR** a signed statement stating that it is not subject to the High Priority and Federal Fleets regulation of title 13, CCR section 2015 through 2015.6.

The High Priority Fleets regulation applies to, without limitation, entities with more than $50 million in gross annual revenues and/or which own, operate, or direct the operation of 50 or more vehicles in the total fleet.

1) Is the Contractor subject to the High Priority and Federal Fleets regulation of title 13, CCR section 2015 through 2015.6?

   Yes ____ **No** X

2) If you answered "Yes" to 1), you **must** submit a document evidencing that you are listed on the CARB Advanced Clean Fleets webpage as a compliant fleet.

Signature: Ray Wilson

Title: Asst. Mngr.

Supplier

Signature: Bryce Sneeks

Print Name: Bryce Sneeks

Title: Assistant Manager

Date: 7/26/24

Supplier

Signature: Roy Wilson

Print Name: Roy Wilson

Title: Asst. Mngr.

Date: 7/26/24

City of Roseville, A Municipal Corporation

Signature: _____

Print Name: **Dominick Casey**

Title: **City Manager**

Date: _____

DocuSign Envelope ID: 4749B558-6FCA-43A5-91D4-B595639FE9FA

CITY OF ROSEVILLE CALIFORNIA

April, 2022

RE: Contractor and Grantee Compliance with Economic Sanctions Imposed in Response to Russia's Actions in Ukraine

Dear Vendor:

On March 4, 2022, Governor Gavin Newsom issued Executive Order N-6-22 (EO) regarding sanctions in response to Russian aggression in Ukraine. The EO is located at https://www.gov.ca.gov/wp-content/uploads/2022/03/3.4.22-Russia-Ukraine-Executive-Order.pdf.

The EO directs all agencies and departments that are subject to the Governor's authority to take certain immediate steps, including notifying all contractors and grantees of their obligations to comply with existing economic sanctions imposed by the U.S. government in response to Russia's actions in Ukraine, as well as any sanctions imposed under state law.

This correspondence serves as a notice under the EO that as a contractor or grantee, compliance with the economic sanctions imposed in response to Russia's actions in Ukraine is required, including with respect to, but not limited to, the federal executive orders identified in the EO and the sanctions identified on the U.S. Department of the Treasury website (https://home.treasury.gov/policy-issues/financial-sanctions/sanctions-programs-and-country-information/ukraine-russia-related-sanctions). Failure to comply may result in the termination of contracts or grants, as applicable.

Please note that for any agreements or grants valued at $5 million or more you must report to the City of Roseville your compliance with economic sanctions including steps you have taken in response to Russia's actions in Ukraine, including, but not limited to, desisting from making new investments in, or engaging in financial transactions with, Russian entities, not transferring technology to Russia or Russian entities, and directly providing support to the government and people of Ukraine.

Sincerely,

DocuSigned by:
Shannon Wiest
A3035660A19747F...

4/25/2022

Shannon Wiest
City of Roseville
Purchasing and Warehouse Manager

Landscapes Unlimited, LLC
1201 Aries Drive
Lincoln, NE 68512
Eric Wolfert
(402) 416-7089 (cell)
(402) 423-4487 (fax)
ewolfert@landscapesunlimited.com

Woodcreek Golf Course – Bunker Renovation Project
City of Roseville
Project 13-150

Dear Recipient,

Landscapes Unlimited, LLC will perform eh services and adhere to the requirements described in the Woodcreek Golf Course Bunker Renovation Project RFP. Additionally, Landscapes Unlimited recognizes there were no addendums issued for this project.

Sincerely,

Roy Wilson
Assistant Manager
Landscapes Unlimited, LLC

6.2 - Signature Requirements

Attachment A

Attachment A

PROPOSER'S CERTIFICATION

I hereby propose to furnish the goods or services specified in the Request for Proposals ("RFP"). I agree that my proposal will remain firm for a period of up to ninety (90) days in order to allow the City of Roseville ("City") adequate time to evaluate the qualifications submitted.

I have carefully examined the Request for Proposals and any other documents accompanying or made a part of this RFP. The information contained in this proposal is true and correct to the best of my knowledge and is signed under penalty of perjury under the laws of the State of California. I further certify that I am duly authorized to submit this proposal on behalf of the firm as its authorized agent and that the firm is ready, willing and able to perform if awarded the contract.

I further certify that this proposal is made without prior understanding, agreement, connection, discussion, or conspiracy with any other person, firm or corporation submitting a proposal for the same product or service; that this proposal is fair and made without outside control, collusion, fraud or illegal action; that no officer, employee or agent of the City or any other proposer is financially interested in said proposal; that no undue influence or pressure was used against or in concert with any officer, employee or agent of the City in connection with the award or terms of the contract that will be executed as a result of this RFP; and that the undersigned executed this Proposer's Certification with full knowledge and understanding of the matters therein contained and was duly authorized to do so.

Landscapes Unlimited, LLC
NAME OF BUSINESS

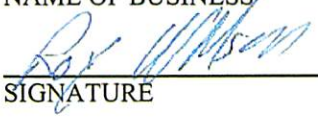
SIGNATURE

Roy Wilson, Assistant Manager
NAME & TITLE, TYPED OR PRINTED

1201 Aries Drive, Lincoln, NE 68512
MAILING ADDRESS

402-423-6653
TELEPHONE NUMBER

roy@landscapesunlimited.com
EMAIL

Type of Organization:

____ Sole Proprietorship ____Corporation _____State of Incorporation

____ Partnership _X_Limited Liability Company

6.3 - Tab A

Firm's Qualifications

LANDSCAPES UNLIMITED

The Nation's Leading Golf Development Company

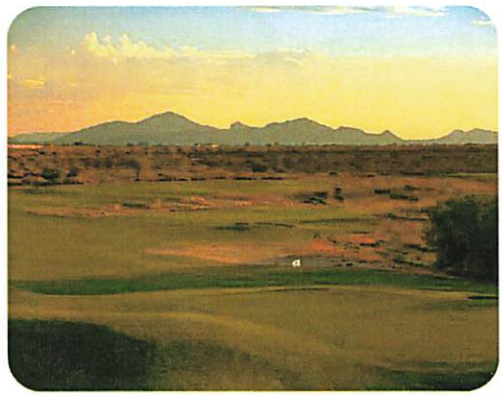

Since 1976 Landscapes Unlimited (LU) has transformed the visions and plans of architects, designers, and developers into reality. Our staff of experienced professionals headed by Bill Kubly has completed more than 2,300 construction and renovation projects across the United States, Europe, Asia and the Caribbean.

LU provides ***unlimited capabilities*** through our four business units: Construction, Irrigation, Project Development and Recreational Development. These business units work individually or in unison to offer complete project delivery. This structure allows us the capability to tailor our services to the specific vision and needs of the client, while providing a tremendous amount of value-added experience and service to each and every project.

With regional offices in strategic locations across the country, LU is able to readily handle any new construction or renovation project as well as irrigation installations on new and existing facilities. We have a working familiarity with all the contracting specialties required to complete the most difficult and complex projects – **safely, on time, and within budget.** Attention to detail, open communication, and a principled focus on quality is the foundation of our solid reputation and lasting client relationships.

WHY LANDSCAPES UNLIMITED?

Providing ***UNLIMITED SOLUTIONS*** is a mindset. We are driven by the notion that success is no coincidence. Our formula is straightforward. Integrate lessons learned through years of hand's-on experiences with an unparalleled commitment to quality, an attitude of partnership, innovation and creativity, and old-fashioned hard work.

- **EXPERIENCE:** 47-plus years in business. Over 2,300 completed projects domestically and internationally, valued at over $2 billion.
- **DIVERSITY:** Projects of all sizes and scopes. A simple bunker rebuild is not too small, nor are turnkey developments budgeted at tens of millions of dollars, too large.
- **INNOVATION:** New approaches with the same core-values. We pride ourselves in being the industry pioneer and leader in alternative turnkey delivery…Design/Build, Design-Assist, Integrated Project Delivery, Design/Build/Operate, Program Management, to name a few.
- **CREATIVITY:** Projects have challenges, both predictable and those that arise mid-stream. Our team members are highly experienced critical thinkers. Imaginative and resourceful workarounds keep a project on track.
- **QUALITY:** It has been our honor to have constructed more courses that have won more industry awards, than anyone in our business. Past clients can attest, no matter the size or the scope, all projects receive the same attention to details.
- **PARTNERSHIP:** Success is nurtured in a collaborative environment. We never view ourselves as just the "contractor". We consider ourselves an extension of the client's resources with a vested interest in their success.
- **HARD WORK:** The Company has evolved dramatically, but the one thing that has not changed, is our rock-solid, mid-west work ethic. We hit the job every morning with a commitment to succeed. ***ROLL UP OUR SLEEVES, BEAT THE BUDGET, MEET THE SCHEDULE, EXCEED THE CLIENT'S EXPECTATIONS!*** This attitude resonates on dozens of job sites every single day, just as it has over the past 47 years.

Customized Solutions

Golf Course Renovation - Construction and Irrigation

Golf Course Renovation/Remodeling

As Owners of golf courses, we understand the challenges of executing a renovation project and the impact it can have on members and/or patrons and operations. We have refined our project delivery approach for renovation projects so that critical milestones are met with the aid of careful planning. We incorporate value engineering and an analysis of constructability so that the capital investment made is optimized. The experience level of our crews is the highest attainable and ensures that the level of quality of the renovation is world class. Finally, we never lose focus that the capital investment in the renovation project is a balance with the loss of some, or all, operational revenues during the renovation period. Our job is to get the club operational as soon as possible. LU's renovation experience covers the entire spectrum of projects, from the smallest bunker or tee renovation to complete remodeling of a golf course facility. We are proud to have taken on some of the most challenging renovation projects in the industry.

Renovation Services

LU is one of the only full-service golf course development and construction companies in the world. We have the capability of providing general contracting services with most of the activities being delivered with our own employees. We also have the capability to provide program management and design/build services which provide the Owner with a single point of responsibility for all design and construction elements of the project. In addition, we can manage the grow-in process of the golf course to have it ready for play to meet the club's operational objectives.

- Golf Course Renovation/Remodeling
- Irrigation
- Grow-in and Maturation
- General Contracting
- Program Management
- Design/Build

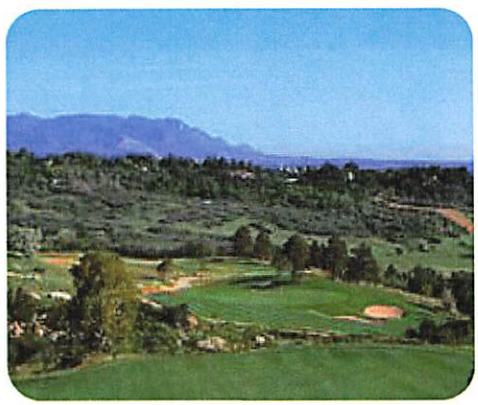

1201 Aries Drive | Lincoln, NE 68512 | 402.423.6653
www.landscapesunlimited.com or find us on Facebook www.facebook.com/FollowLandscapes

Irrigation Renovation

LU began its history over 47 years ago as an irrigation contractor replacing and servicing systems on existing golf courses. That business soon grew into complete golf course renovations and the construction of new golf courses. The core fundamentals learned in those early years have allowed us to grow our business into what it is today.

The expertise developed over decades of successful irrigation installations allows Landscapes Unlimited to offer valuable insight into the design, installation, management and maintenance of all types of irrigation systems especially as it relates to renovation projects. Because we also own and manage golf courses, we understand the importance of being as invisible as possible during our work so as not to impact the normal operations and play on the golf course. At the end of the project we, like the client, don't want any evidence of us ever being on the course except to notice the beautiful quality turf as a result of a newly installed and very efficient irrigation system.

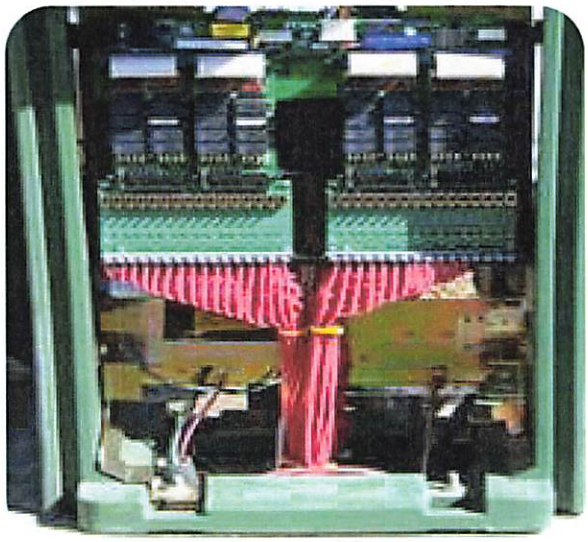

The Landscapes Unlimited irrigation teams and support staff are very knowledgeable with all the latest state-of-the-art products and technology meant to preserve our very precious water resources:

- Precision sprinklers and nozzles
- Satellite, decoder and wireless control systems
- Soil sensor monitoring and weather stations
- Variable frequency drive pump stations
- Long-lasting and durable HDPE piping systems

Irrigation Services

LU is one of the few golf course general contractors in the industry that has its own Irrigation Division whose very skilled and experienced team-members focus solely on irrigation installations on existing courses and new construction courses. LU's irrigation capabilities are highly sought after by Irrigation Consultants and clients across the United States as well as outside the country. To maintain the high performance demanded in quality irrigation installations, LU invests heavily in continued education and training of its irrigation personnel in always striving to perfect their irrigation installation techniques. Like the construction team, the goal is the same for the irrigation team....to be the best in the business.

Landscapes Unlimited: An Advocate for Sustainability

1201 Aries Drive | Lincoln, NE 68512 | 402.423.6653

www.landscapesunlimited.com or find us on Facebook www.facebook.com/FollowLandscapes

SAFETY

We Work Safe

LU's Safety Program is one of the most comprehensive in the industry.

Here is why we are so successful:
At Landscapes Unlimited safety is more than a program, it is a fundamental value in our organization's mission and is constantly demonstrated, reinforced, and recognized at every level of our operations. To sustain our safety program, the following five components are used in its implementation to allow the program to continually flourish:

Communication is a critical tool utilized by the company to create a continuous awareness about current safety practices among all employees. Field managers receive regular safety program updates as well as materials and safety information via e-mail, intra-net, and web-based meetings. Compliance reports are provided to senior staff regularly (weekly, monthly, quarterly, and year end) to ensure everyone is aware of the status of their project's safety activities.

Training is a cornerstone of LU's safety program and is vital to ensure the highest safety standards are maintained throughout the company. Superintendents and their assistants receive monthly video-based safety training and must pass each course to demonstrate their comprehension. Weekly toolbox talks as well as daily tailgate safety meetings are utilized to further support and disseminate safety education and awareness to all levels of our personnel.

Accountability is a key element in establishing that every employee is responsible for the safety of themselves, their coworkers and the general public. A clear understanding of what is required of each employee to complete their job functions in a safe manner is continually provided and enforced in a fair and consistent manner so all can share in the benefits of the organization's safety culture. Employee involvement in the program is encouraged and acknowledged.

Safety Inspections are conducted by our corporate safety staff, insurance representatives and approved outside consultants using a state-of-the-art safety report application. These comprehensive examinations of our project sites identify and record any potential hazards and their underlying causes. Corrective actions are then assigned to responsible parties for their elimination or control.

Reward and recognition is the final component of the company's safety program. A dynamic safety- incentive system is used in rewarding employees at all levels for demonstrating safe work practices and recognizing ingenuity. As an organization, formal recognition is also provided to employees every June during National Safety Month.

Attachment C

SUBCONTRACTOR LIST

If subcontractors will not be used, proposer must write "NONE". For construction contracts, in accordance with the Public Contract Code, Part 1, Chapter 4, Subletting and Subcontracting, Contractors must list the name and business address of each subcontractor who will perform work or labor or render service to the prime contractor in or about the construction of the work or improvement, or who will specially fabricate and install a portion of the work or improvement according to detailed drawings contained in the plans and specifications, in an amount in excess of one-half of one percent (0.5%) of the prime contractor's total bid, or in the case of bids or offers for the construction of streets and highways, including bridges, in excess of one-half of one percent (0.5%) of the prime contractor's total bid or ten thousand dollars ($10,000) whichever is greater.

Company Name West Coast Turf

Principal John Foster

Address PO Box 4563

City Palm Desert, CA 92261

Phone 888-893-8873

Job capacity Grassing

Percentage of total work 20%

Licenses and numbers CA #688087

DIR Contractor Registration Number & Expiration Date 1000009410 - Exp 6-30-2024

Company Name N/A

Principal

Address

City

Phone

Job capacity

Percentage of total work

Licenses and numbers

DIR Contractor Registration Number & Expiration Date

6.4 - Tab B

References

LANDSCAPES UNLIMITED, LLC

TORREY PINES GOLF COURSE - SOUTH COURSE

La Jolla, CA

Contract Value: $14 million

Scope: Complete renovation of irrigation system, drainage improvements, new capillary concrete bunkers and renovated bunkers, cart path replacement, leveling of existing tees, installation of new tees and new green sumps

Year Completed: 2019

Reference: Mr. Richard McIntosh, GC Supt
11480 N Torrey Pines Rd, La Jolla, CA 92037
(330) 241-9858

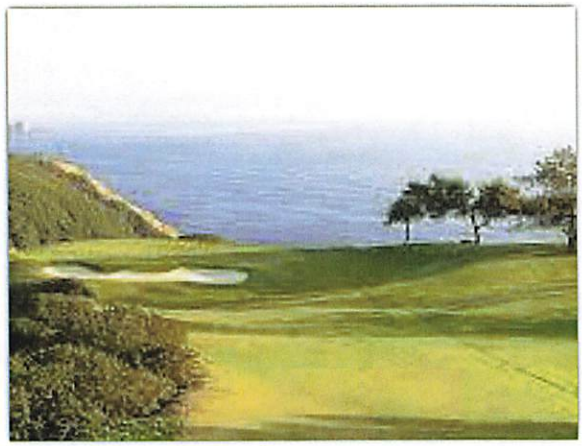

SAHALEE COUNTRY CLUB

SAMMAMISH, WA

Contract Value: $1.9 million

Scope: Bunker renovation with capillary concrete

Year Completed: 2023

Reference: Charlie Schauwecker
21200 NE Sahalee Country Club, Sammamish WA 98074
(425) 868-1600

LA JOLLA COUNTRY CLUB

La Jolla, CA

Contract Value: $2.7 million

Scope: Golf course renovation project to include demo, earthwork, drainage, greens approach, new greens, greens expansion, bunker renovation, new tees, cart paths, irrigation, and grassing.

Year Completed: 2019

Reference: Dennis Fowler
7301 High Ave, La Jolla, CA 92037
(858) 454-9601

6.5 - Approach and Schedule

6.5 Detailed discussion of your approach.

Landscapes Unlimited's approach to implementing the Woodcreek bunker improvement project would be to keep our resources in a reduced area of disturbance, work our way out of the golf course and complete areas before moving forwards.

After looking at the site and the layout of the golf holes LU grouped holes together into work areas. This allows us to keep our resources in a localized area, reducing the travel time and keeping the crews and equipment within a smaller area of disturbance at one time. This can be less disruptive to golf players and play. The noise and construction traffic is somewhat confined and can be avoided by players or completely closed to play. This will also help with the maintenance during the grow in phase of the project while establishing the new turf areas. We have learned that by keeping the crews close to each other on a large spread-out project site we can have better supervision and quality control. LU would work our way out of the golf course by starting at one of the farthest points and working toward the staging area, this corresponds to how we have grouped the holes as well. By completing work in this order, we can turn over areas to the golf course and keep construction traffic out of the areas. Landscapes Unlimited works towards completing each hole and area before moving forwards onto the next area, we prefer to compile and complete a punch list for each hole and area before finishing that hole. This allows maintenance to have a complete and finished hole when taken over from construction with no outstanding issues. Then there is no need for the construction crews to return to the finished hole creating more disruption to golf play and maintenance to complete a punch list item.

Landscapes approach to each area on the golf hole would be to locate the area of disturbance according to the design and clearly define that area. We would then start removing the existing turf and bunkers as well as cut and cap all irrigation to be removed. Once the area is clear our shaper would come in and clear the existing topsoil and then move into shaping the architects plan, this is also the time when any fill or cut materials would be brought in or removed. The shaper would put everything to a rough shape with bunker location and general shape as well as any mounding and depressions, readying the site for architects' approval of the rough shape. Once the architect has approved the rough shape topsoil will be replaced and bunker detail work will start. The bunker edge will be cut in and the bunker face and floor will be finished. After the detailed bunker is approved the drainage will be installed in the bunker and to daylight or tied into existing per plan. Replacement of any irrigation would be completed at this time. If a bunker liner is approved this would be installed next followed by the bunker sand installation. The area would be cleaned up and prepped for sod installation. Sod installed and the initial watering applied. At this time, we would walk the area and create a hole punch list with the owner's responsible party and complete any items that would need correction or additional work. Once

one of the LU defined areas has been completed, we would then also check with the owner's party and or the architect to make sure there are no punch list items outstanding.

Landscapes Unlimited would propose starting this work in September through December and this would make weather a factor in completing the project in time. The colder temperatures would also have an affect on grow in of the sod.

Landscapes Unlimited has been in business for over forty years with team members who have multiple years of experience. We have a large amount of support from all our team throughout the country in experience, equipment, and staff resources. We prefer to pull together with the architect and ownership as a complete team to produce a quality project and have even won awards for teaming up with a municipality to complete a high quality project.

6.6 - Tab D

Cost Proposal - Attachment H

Attachment H
BID PROPOSAL

Woodcreek Golf Course Renovation Project, 13-150

The undersigned, being familiar with the local conditions affecting the work, and with the requirements outlined in RFP 13-150 hereby proposes to furnish all labor, materials, equipment, and service necessary for the construction work as shown in the plans and specifications prepared by Norby Golf Course Design dated February 19, 2024. The prices listed below shall include all costs including general conditions, taxes, fees, permits and supervision.

Lump Sum Base Bid (Excluding Alternates) $ 1,295,000.00

Anticipated Start Date September 1, 2024

Anticipated Completion Date December 22, 2024

ALTERNATES	DESCRIPTION	COST
Alternate #1	Install Flexxcape bunker liner in lieu of base bid with no liners.	$ 200,500.00
Alternate #2	Install Capillary Concrete bunker liner in lieu of base bid with no liners.	$ 215,500.00
Alternate #3	Install Porous Pave liner in lieu of base bid with no liner.	$ 195,000.00
Alternate #4	Install West Coast 50/50 White bunker sand in lieu of base bid G3 bunker sand.	$ 38,500.00
Alternate #5	Install bunker 3A on Hole 3	$ 7,500.00
Alternate #6	Install bunker 8A on Hole 8	$ 11,000.00
Alternate #7	Install bunker 9B on Hole 9	$ 9,100.00
Alternate #8	Install bunker 10B on Hole 10	$ 8,000.00
Alternate #9	Install bunker 12B on Hole 12	$ 7,300.00
Alternate #10	Install Better Billy Bunker liner in lieu ofbase bid	$ 140,000.00

UNIT PRICES

Unit Price #1 Haul and install existing soil per cubic yard .	$ 35.00
Unit Price #2 Provide, haul, and install additional topsoil on site.	$ 93.00
Unit Price #3 Provide and install Bermuda grass sod per square yard.	$ 8.75

Unit Price #4 Provide and install 4" perforated drain tile with pea rock per lineal foot including sod repair and restoration. $ 32.00

Unit Price #5 Provide and install 4" non-perforated drain tile per lineal foot including sod repair and restoration. $ 30.00

Unit Price #6 Provide and install 12" HDPE catch basin with metal grate per each. $ 620.00

Unit Price #7 Provide and install HDPE leach chamber per each. $ 200.00

Unit Price #8 Provide and install 8 inch straw wattle erosion control per lineal foot. $ 5.40

Unit Price #9 Provide and install silt fence per lineal foot. $ 4.00

Unit Price #10 Raise/lower existing head and swing joint with no pipe splicing per each. $ 150.00

Unit Price #11 Relocate irrigation head with & swing joint with up to 80 feet of pipe and/or wire splicing per each location. New head and swing joint to be supplied by owner. $ 950.00

The undersigned submits herewith the bid security required by the Instruction to Bidders.

Respectfully submitted,

Company Name: Landscapes Unlimited, LLC

Authorized Representative: Roy Wilson

Title: Assistant Manager

Signature: Roy Wilson

6.7 - Tab E

Required Statements and Douments

5.0 ASSURANCE OF DESIGNATED PROJECT TEAM

Proposer shall assure that the designated project team, including sub-consultants or sub-contractors (if any), is used for this project. Departure or reassignment of, or substitution for, any member of the designated project team, sub-consultant(s) or sub-contractor(s) shall not be made without the prior written approval of the City.

Landscapes Unlimited, LLC agrees to the Assurance of Designated Project Team statement above.

10.4 Conflict of Interest.

The Contractor shall warrant that no official or employee of the City has an interest, has been employed or retained to solicit or aid in the procuring of the resulting contract, nor that any such person will be employed in the performance of such contract without immediate divulgence of such fact to the City. Contractors submitting a proposal in response to this RFP must disclose any actual, apparent, direct, indirect, or potential conflicts of interest that may exist with respect to the Contractor or the Contractor's management or employees relative to the services to be provided to the City. Conflict of interest issues may require consultation with legal counsel. If a Contractor has no conflicts of interest, a statement to that effect must be included in the proposal. Violation of this section shall be a material breach of the contract entitling the City to any and all remedies by law or in equity.

Landscapes Unlimited, LLC warrants that we have no conflict of interest as outlined above.

10.7 Indemnification & Insurance Requirements.

The City's standard indemnification and insurance requirements are provided in the sample contract, included in Attachment D. All costs of complying with the insurance requirements shall be as included in your pricing. The selected Contractor shall provide complete and valid insurance certificates within ten (10) days of the City's written request. Failure to provide the documents within the time stated may result in rejection of the Contractor's proposal. If a proposer takes exception to the indemnification and insurance requirements, then the nature and scope of the proposed exceptions may negatively affect the evaluation of that proposer's submittal and the City's determination of whether it is possible to successfully negotiate a contract with that firm. Submitting exceptions are at the proposer's own risk.

Landscapes Unlimited, LLC agrees to the Indemnification and Insurance requirements outlined in this RFP sample contract.

10.23 Proprietary Information.

Proposers submitting a proposal in response to this RFP must provide a statement that nothing contained in the submitted proposal will be proprietary. However, if a proposer desires to claim a privilege against public disclosure for a trade secret or other proprietary information, such information must be submitted with the proposal in a separate envelope marked "confidential." The City Attorney's Office will determine if the information is in fact proprietary, based on state and federal law. Note that under California law, a price proposal to a public agency is not a trade secret. The Contractor shall defend, indemnify and hold harmless the City regarding any claim by any third party for the public disclosure of the "confidential" portion of the proposal.

Landscapes Unlimited, LLC proposal does not contain any proprietary information.

William Kubly
bill.kubly@landscapesunlimited.com

LANDSCAPES UNLIMITED, LLC (199935410042)

File Amendment | File Statement of Information | Request Certificate

Initial Filing Date	12/20/1999
Status	Active
Standing - SOS	Good
Standing - FTB	Good
Standing - Agent	Good
Standing - VCFCF	Good
Formed In	NEBRASKA
Foreign Name	LANDSCAPES UNLIMITED, L.L.C.
Entity Type	Limited Liability Company - Out of State
Principal Address	1201 ARIES DR LINCOLN, NE 68512
Mailing Address	1201 ARIES DR LINCOLN,NE68512
Statement of Info Due Date	12/31/2025
Agent	1505 Corporation URS AGENTS INC.

View History | Manage User Access

Attachment A

PROPOSER'S CERTIFICATION

I hereby propose to furnish the goods or services specified in the Request for Proposals ("RFP"). I agree that my proposal will remain firm for a period of up to ninety (90) days in order to allow the City of Roseville ("City") adequate time to evaluate the qualifications submitted.

I have carefully examined the Request for Proposals and any other documents accompanying or made a part of this RFP. The information contained in this proposal is true and correct to the best of my knowledge and is signed under penalty of perjury under the laws of the State of California. I further certify that I am duly authorized to submit this proposal on behalf of the firm as its authorized agent and that the firm is ready, willing and able to perform if awarded the contract.

I further certify that this proposal is made without prior understanding, agreement, connection, discussion, or conspiracy with any other person, firm or corporation submitting a proposal for the same product or service; that this proposal is fair and made without outside control, collusion, fraud or illegal action; that no officer, employee or agent of the City or any other proposer is financially interested in said proposal; that no undue influence or pressure was used against or in concert with any officer, employee or agent of the City in connection with the award or terms of the contract that will be executed as a result of this RFP; and that the undersigned executed this Proposer's Certification with full knowledge and understanding of the matterstherein contained and was duly authorized to do so.

Landscapes Unlimited, LLC
NAME OF BUSINESS

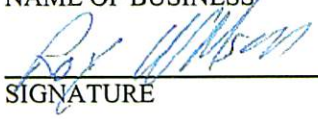
SIGNATURE

Roy Wilson, Assistant Manager
NAME & TITLE, TYPED OR PRINTED

1201 Aries Drive, Lincoln, NE 68512
MAILING ADDRESS

402-423-6653
TELEPHONE NUMBER

roy@landscapesunlimited.com
EMAIL

Type of Organization:

____ Sole Proprietorship ____Corporation _____State of Incorporation

____ Partnership _X_Limited Liability Company

Attachment L

LEVINE ACT DISCLOSURE STATEMENT

(The completed form submitted to the City of Roseville is a public record.)

California Government Code Section 84308, commonly referred to as the "Levine Act," prohibits any "Officer" (elected or appointed officer, any alternate thereto, and any candidate for elective office) from participating in any consideration or action related to a proceeding if they receive political contribution(s) from a party, or its agent(s), totaling more than $250 within the previous twelve (12) months, while a proceeding is pending, and for twelve (12) months following the date of a final decision in a proceeding concerning a license, permit, other entitlement for use, franchise, or contract (collectively "license, permit, or contract"). For additional information: https://www.roseville.ca.us/government/departments/city_clerk/transparency/levine_act.

City Officers are listed at the following sites:

- The Members of City Council - https://www.roseville.ca.us/government/city_council/meet_council
- Boards & Commission Members - https://www.roseville.ca.us/government/boards_commissions

Parties and their Agents are responsible for reviewing and disclosing their applicable contributions to City Officers on the record of a proceeding.

1. Have you or your entity, or any agent on behalf of you or your entity, made any political contribution(s) totaling more than $250 to any City Officer in the twelve (12) months preceding the date of the submission of your license, permit, or contract, or the anticipated date of any City Council, Board, or Commission consideration or action related to this license, permit, or contract?

YES_____ NO _X_

If yes, please identify the CityOfficer(s):_____

2. Do you or your entity, or any agent on behalf of you or your entity, anticipate orplan to make any political contribution(s) totaling more than $250 to any City Officer in the twelve (12) months following any City Council, Board, or Commission consideration or action related to this license, permit, or contract?

YES_____ NO _X_

If yes, please identify the CityOfficer(s):_____

Answering yes to either of the two questions above does not preclude the City of Roseville from considering and/or taking action on a license, permit, or contract. It does, however, potentially preclude the identified City Officers from participating in consideration of and in taking any actions related to the license, permit, or contract. Please accurately complete and sign this form, under the penalty ofperjury:

5-30-2024	Roy Wilson - Assistant Manager	Landscapes Unlimited, LLC
(Date)	(Printed Name/Title of Authorized Representative)	(Name of business/legal entity)

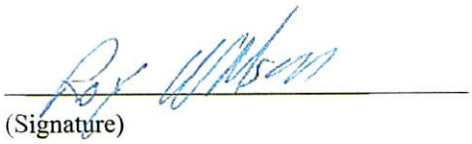

(Signature)

You must submit a supplemental form if you make any new reportable contribution(s) while the contract, license, permit, or other entitlement is being considered. If this form has not previously been submitted in connection with a contracting, licensing, entitlement or permitting process, please provide the completed form to the Office of the City Clerk for appropriate departmental routing, at: City Clerk, 311 Vernon St., Roseville, CA 95678, CityClerkRoseville@roseville.ca.us

Attachment E

NONCOLLUSION DECLARATION TO BE EXECUTED BY BIDDER AND SUBMITTED WITH BID

The undersigned declares:

I am the Assistant Manager of Landscapes Unlimited, LLC, the party making the foregoing bid.

The bid is not made in the interest of, or on behalf of, any undisclosed person, partnership, company, association, organization, or corporation. The bid is genuine and not collusive or sham. The bidder has not directly or indirectly induced or solicited any other bidder to put in a false or sham bid. The bidder has not directly or indirectly colluded, conspired, connived, or agreed with any bidder or anyone else to put in a sham bid, or to refrain from bidding. The bidder has not in any manner, directly or indirectly, sought by agreement, communication, or conference with anyone to fix the bid price of the bidder or any other bidder, or to fix any overhead, profit, or cost element of the bid price, or of that of any other bidder. All statements contained in the bid are true. The bidder has not, directly or indirectly, submitted his or her bid price or any breakdown thereof, or the contents thereof, or divulged information or data relative thereto, to any corporation, partnership, company, association, organization, bid depository, or to any member or agent thereof, to effectuate a collusive or sham bid, and has not paid, and will not pay, any person or entity for such purpose.

Any person executing this declaration on behalf of a bidder that is a corporation, partnership, joint venture, limited liability company, limited liability partnership, or any other entity, hereby represents that he or she has full power to execute, and does execute, this declaration on behalf of the bidder.

I declare under penalty of perjury under the laws of the State of California that the foregoing is true and correct and that this declaration is executed on 5-30-2024 [date], at Lincoln [city], Nebraska [state].

(Signature of Declarant)

Attachment B

CONTRACTOR LICENSES

List the licenses held by your company and/or employees. The following representations are made under penalty of perjury:

CA State Lic No.	Name on License	Class/Type	Expiration Date
973614	Landscapes Unlimited, LLC	A B C27	6-30-2024

Do you have a City of Roseville Business License? Yes____No_X___

License #__If awarded the project, LU will obtain all additional licenses needed.

***For Public Works Projects (SB854)**: Contractors must register with the Department of Industrial Relations (DIR) pursuant to Labor Code section 1725.5. The Contractor shall provide proof of current registration with the Department of Industrial Relations for both itself and all listed subcontractors with their proposal. Contractors may register at: http://www.dir.ca.gov/public-works/publicworks.html

DIR contractor registration number and expiration date:

*_PW-LR-1001048178 - Exp 6-30-2025_____

Attachment C

SUBCONTRACTOR LIST

If subcontractors will not be used, proposer must write "NONE". For construction contracts, in accordance with the Public Contract Code, Part 1, Chapter 4, Subletting and Subcontracting, Contractors must list the name and business address of each subcontractor who will perform work or labor or render service to the prime contractor in or about the construction of the work or improvement, or who will specially fabricate and install a portion of the work or improvement according to detailed drawings contained in the plans and specifications, in an amount in excess of one-half of one percent (0.5%) of the prime contractor's total bid, or in the case of bids or offers for the construction of streets and highways, including bridges, in excess of one-half of one percent (0.5%) of the prime contractor's total bid or ten thousand dollars ($10,000) whichever is greater.

Company Name West Coast Turf

Principal John Foster

Address PO Box 4563

City Palm Desert, CA 92261

Phone 888-893-8873

Job capacity Grassing

Percentage of total work 20%

Licenses and numbers CA #688087

DIR Contractor Registration Number & Expiration Date 1000009410 - Exp 6-30-2024

Company Name N/A

Principal

Address

City

Phone

Job capacity

Percentage of total work

Licenses and numbers

DIR Contractor Registration Number & Expiration Date

Attachment G

CALIFORNIA AIR RESOURCES BOARD REGULATION COMPLIANCE

Please indicate whether the Contractor is subject to, and/or in compliance with, the following regulations of the California Air Resources Board.

In-Use Off-Road Diesel-Fueled Fleets Regulation

1) Will vehicles subject to Cal. Code Regs., tit. 13, §§ 2449 et seq. be used for the project? This includes, but is not limited to:

   a) Vehicles with a diesel-fueled or alternative diesel fueled off-road compression-ignition engine with maximum power (max hp) of 25 horsepower (hp) or greater provided that the vehicle cannot be registered and driven safely on-road or was not designed to be driven on-road, even if it has been modified so that it can be driven safely on-road
   b) Workover rigs
   c) Certain two-engine vehicles

   Yes X **No** ____

2) If you answered "Yes" to 1), you **must** submit with your proposal a valid Certificate of Reported Compliance to the City as provided in Cal. Code Regs., tit. 13, § 2449(n).

Advanced Clean Fleets Regulation

Pursuant to Cal. Code Regs., tit. 13, § 2013(i)(1), the Contractor shall submit to the City a document evidencing that it is listed on the CARB Advanced Clean Fleets webpage as a compliant fleet **OR** a signed statement stating that it is not subject to the High Priority and Federal Fleets regulation of title 13, CCR section 2015 through 2015.6.

The High Priority Fleets regulation applies to, without limitation, entities with more than $50 million in gross annual revenues and/or which own, operate, or direct the operation of 50 or more vehicles in the total fleet.

1) Is the Contractor subject to the High Priority and Federal Fleets regulation of title 13, CCR section 2015 through 2015.6? Answering "No" constitutes a statement of exemption as required in Tab G.

   Yes____ **No** X

2) If you answered "Yes" to 1), you **must** submit with your proposal a document evidencing that you are listed on the CARB Advanced Clean Fleets webpage as a compliant fleet.

* Landscapes Unlimited, LLC is not subject to the High Priority and Federal Fleets regulation of title 13, CCR section 2015 through 2016.6.

Signature _____ Title Assistant Manager

d void. Certificate expires 2/28/2025

Off-road

rol Division
Board

To verify the authenti
http://www.arb.ca

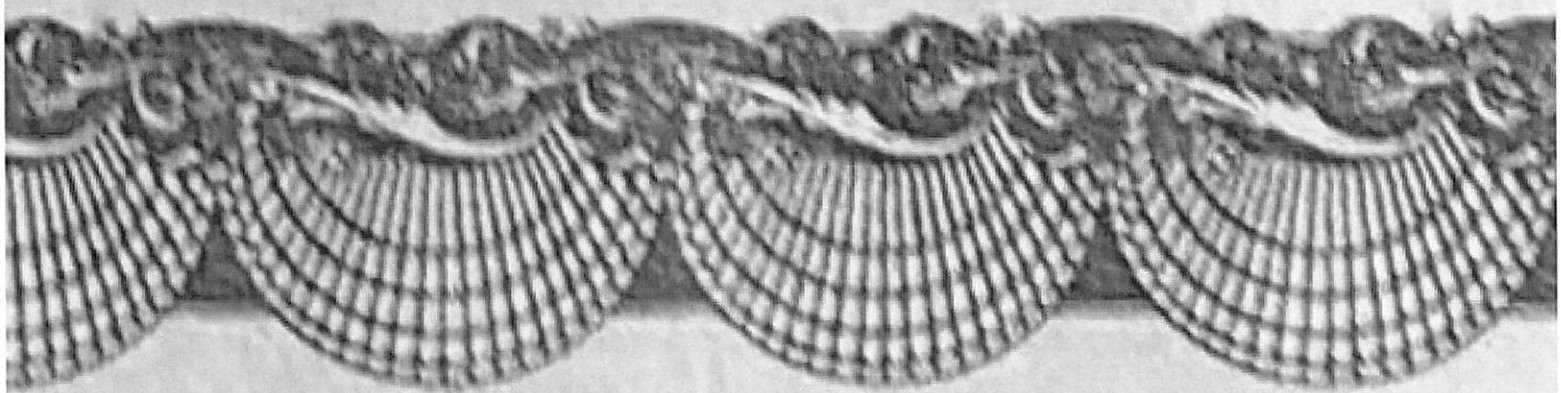

6.8 - Exceptions

6.8 – Exceptions

Landscapes Unlimited, LLC is not submitting any exceptions.

6.9 - Tab I

Competency of Proposers

To the best of Landscapes Unlimited, LLC's knowledge, information and belief, Landscapes has been involved in following litigation or arbitration with regard to construction contracts in the last 10 years:

Plaintiff vs. Landscapes Unlimited, LLC, Defendant, Case no 24STCV12695
Plaintiff has sued Landscapes Unlimited, LLC for labor code violations under the state of California. Plaintiff alleges that Landscapes Unlimited failed to compensate defendant for all time worked. The plaintiff's attorney has filed a suit with the Superior Court of California, County of Los Angeles. The case is currently in the discovery process. (5-28-2024)

Santa Ana Country Club vs Michael Baker International and Landscapes Unlimited, LLC of Nebraska (as Cross Defendant), **Case no 30-2019-01093949-CU-CD-CXC, (Superior Court, Orange County, Santa Ana, California):** Plaintiff has sued Michael Baker International (MBI) for damages arising from defective design of a waterway on the golf course. MBI has countersued Santa Ana and has named Landscapes Unlimited as a Cross defendant for the sake of equitable indemnity. Landscapes has engaged our insurance company and attorneys to push for full dismissal from the suit and countersuit. The case went to arbitration at which time it was settled.

Landscapes Unlimited of Nebraska, LLC v. Seven Falls, LLC, et al., File Number 09-CVS-2099 (Court of Justice, Superior Division, Henderson County, North Carolina): Defendants failed to make payment to Landscapes Unlimited for work performed on a golf course in North Carolina. Landscapes filed suit to collect payment. The Defendants subsequently filed Chapter 11 bankruptcy and the case was stayed. The bankruptcy case was dismissed, and the case went to mediation, at which time it was settled.

Case No. 01-23-0004-1560: Build Baytown I LLC v. Landscapes Unlimited, LLC;

On August 6, 2023, Landscapes Unlimited, LLC filed Substantial Completion documentation with the client at which time the client then filed Termination with Cause on August 18, 2023. Both parties met on December 15, 2023, and April 1, 2024, but were unable to reach an agreement to settle their dispute. After attempting mediation, Build Baytown I LLC filed for bankruptcy. (5-28-2024)

Waterfall Club – Homeowner's allege that construction activities performed by Landscapes (amongst others) contributed to excess sediment to collect in a pond and the pond now requires dredging. Landscapes Unlimited is being defended by our pollution carrier and they do not believe there is any evidence of liability and will contend that the construction activities had no contribution to the sediment runoff and accumulation in the pond. Landscapes Unlimited, LLC is currently in mediation with the Waterfall Club. (5-28-2024)

Landscapes Unlimited, LLC
1201 Aries Drive • Lincoln, NE 68512
Phone (402) 423-6653 • Fax (402) 423-1443

To:	City Of Roseville	**Contact:**	
Address:	Roseville, CA	**Phone:**	
		Fax:	
Project Name:	Woodcreek Golf Course - Reduced Bunker Reno - Revised Scope	**Bid Number:**	
Project Location:		**Bid Date:**	7/8/2024

Item #	Item Description	Estimated Quantity	Unit	Total Price
1.	Lump Sum Base Bid	1.00	LS	$937,485.00
alt. 3.	Install Porous Pave Liner In Lieu Of Base Bid With No Liner	1.00	LS	$102,515.00
1.	Mobilization	1.00	LS	
2.	General Conditions / Supervision	1.00	LS	
3.	Golf Course Staking	1.00	LS	
4.	Install Wattles - 8" Diameter, Wheat Straw, Jute Netting	200.00	LF	
5.	Roto-Till Existing Grass And Bunkers	5.05	ACRE	
6.	Topsoil Hauling & Spreading **Topsoil Purchased By OWNER**	500.00	CY	
7.	Earthwork - Toploading	950.00	CY	
8.	Bunker Rough Shaping	1.00	LS	
9.	Bunker Construction **Bunker Sand Purchased By OWNER**	21,049.00	SF	
10.	Porous Pave Bunker Liner	21,049.00	SF	
11.	4" Solid Exit Pipe - Bunker Construction	2,710.00	LF	
12.	12" CB (Riser W/ Grate) & Bubblers	20.00	EACH	
13.	Irrigation - (Adjust Heads - 32 EA; Relocate Heads - 41 EA)	1.00	LS	
14.	Seedbed Prep	4.55	ACRE	
15.	Fertilizers	4.55	ACRE	
16.	Fway/Rough Sod & Install - Santa Ana Bermuda	197,850.00	SF	

Total Bid Price: $1,040,000.00

ACCEPTED:	**CONFIRMED:**
The above prices, specifications and conditions are satisfactory and are hereby accepted.	**Landscapes Unlimited, LLC**
Buyer: _____	
Signature: _____	**Authorized Signature:** _____
Date of Acceptance: _____	**Estimator:**

Woodcreek Golf Club Bunker Improvement Project

Scope of work based on the plan set titled; Woodcreek Golf Club Bunker Improvement Project Dated Febuary 19, 2024. Prepared for: City of Roseville California, Prepared by: Norby Golf Course Design.

Sheet Title Page, Page 82 of 101, Start of Plan Set.

Sheet Hole 1, Page 83 of 101, All work on this sheet for Hole 1 Fairway Bunkers.

Sheet Hole 2, Page 84 of 101, No work on this sheet for Hole 2.

Sheet Hole 3, Page 85 of 101, All work on this sheet for Hole 3. Excluding Alternate # 5 Construct new bunker left of approach (3A).

Sheet Hole 4, Page 86 of 101, No work on this sheet for Hole 4.

Sheet Hole 5, Page 87 of 101, No work on this sheet for Hole 5.

Sheet Hole 6, Page 88 of 101, No work on this sheet for Hole 6.

Sheet Hole 7, Page 89 of 101, No work on this sheet for Hole 7.

Sheet Hole 8, Page 90 of 101, No work on this sheet for Hole 8.

Sheet Hole 9, Page 91 of 101, All work on this sheet for Hole 3. Excluding Alternate # 7 Construct bunker 9B.

Sheet Hole 10, Page 92 of 101, Fairway work on this sheet for Hole 10. Excluding Alternate # 8 Construct new greenside bunker 10B and Rebuild greenside bunker (10C).

Sheet Hole 11, Page 93 of 101, Greenside work on this sheet for Hole 11. Excluding Reinstate Approach, Fairway Sod 3,785 sf and all grading and prep work associated with this.

Sheet Hole 12, Page 94 of 101, All work on this sheet for Hole 12. Excluding Alternate # 9 Add new fairway bunker (12B). With a reduction of Fairway Sod to 9,560 sf from the planned 19,560 sf.

Hole 13, No sheet, no work on Hole 13.

Sheet Hole 14, Page 95 of 101, No work on this sheet for Hole 14.

Hole 15, No sheet, no work on Hole 15.

Sheet Hole 16, Page 96 of 101, All work on this sheet for Hole 16.

Sheet Hole 17, Page 97 of 101, No work on this sheet for Hole 17.

Sheet Hole 18, Page 98 of 101, No work on this sheet for Hole 18.

Sheet Range, Page 99 of 101, No work on this sheet for Range.

Sheet Construction Details, Page 101 of 101, End of Plan Set.

Work from these Sheets to include 200 Linear Feet of Straw Wattles, 219,978 Square Feet of Roto Tilling Existing Turf, Import and placement of 500 Cubic Yards of Topsoil (Topsoil material supplied

by owner), Bunker rough shaping and Construction of 21,049 Square Feet Including finish shaping and edging of 21,049 Square Feet, Drainage of 1,523 Linear Feet of 4" Perforated ADS N-12 Drain Pipe with gravel back fill, Porous Pave Bunker Liner of 21,049 Square Feet, Bunker Sand installation at 4" depth of 385 Tons, (Bunker Sand materials supplied by owner), Drainage to include 2,710 Linear Feet of 4" Solid ADS N-12 drain pipe with soil backfill, 10 Each of 12" Catch Basins, 8 Each of 12" Bubblers, Irrigation Relocation and Adjustment per plan in disturbed areas including Adjusting 32 heads and 2 quick couplers, Relocating 41 heads, 1 quick coupler, 1 isolation valve and 110 Linear feet of mainline and lateral pipe spices per plan (Irrigation Heads and Swing Joints supplied by owner). Installation and initial watering of 197,850 Square Feet of Santa Ana Bermuda sod.

IRWAY BUNKERS	219 hrs	Thu 8/22/24	Mon 9/30/24
ND 16 GREENSIDE IKERS]	176 hrs	Mon 9/2/24	Wed 10/2/24
IS	172 hrs	Mon 9/2/24	Wed 10/2/24
IS	127 hrs	Fri 9/6/24	Mon 9/30/24
	121 hrs	Wed 9/11/24	Wed 10/2/24
ND 10 FAIRWAY	211 hrs	Tue 9/17/24	Wed 10/23/24
	189 hrs	Tue 9/17/24	Fri 10/18/24
	135 hrs	Mon 9/30/24	Wed 10/23/24
EENSIDE AND	113 hrs	Wed 10/2/24	Tue 10/22/24
RWAY BUNKERS	113 hrs	Wed 10/2/24	Tue 10/22/24
EEN AND 1 FAIRWAY	168 hrs	Tue 10/8/24	Wed 11/6/24
	146 hrs	Tue 10/8/24	Mon 11/4/24
	151 hrs	Fri 10/11/24	Wed 11/6/24
	0 hrs	Wed 11/6/24	Wed 11/6/24
	80 hrs	Wed 11/6/24	Wed 11/20/24
	0 hrs	Wed 11/20/24	Wed 11/20/24

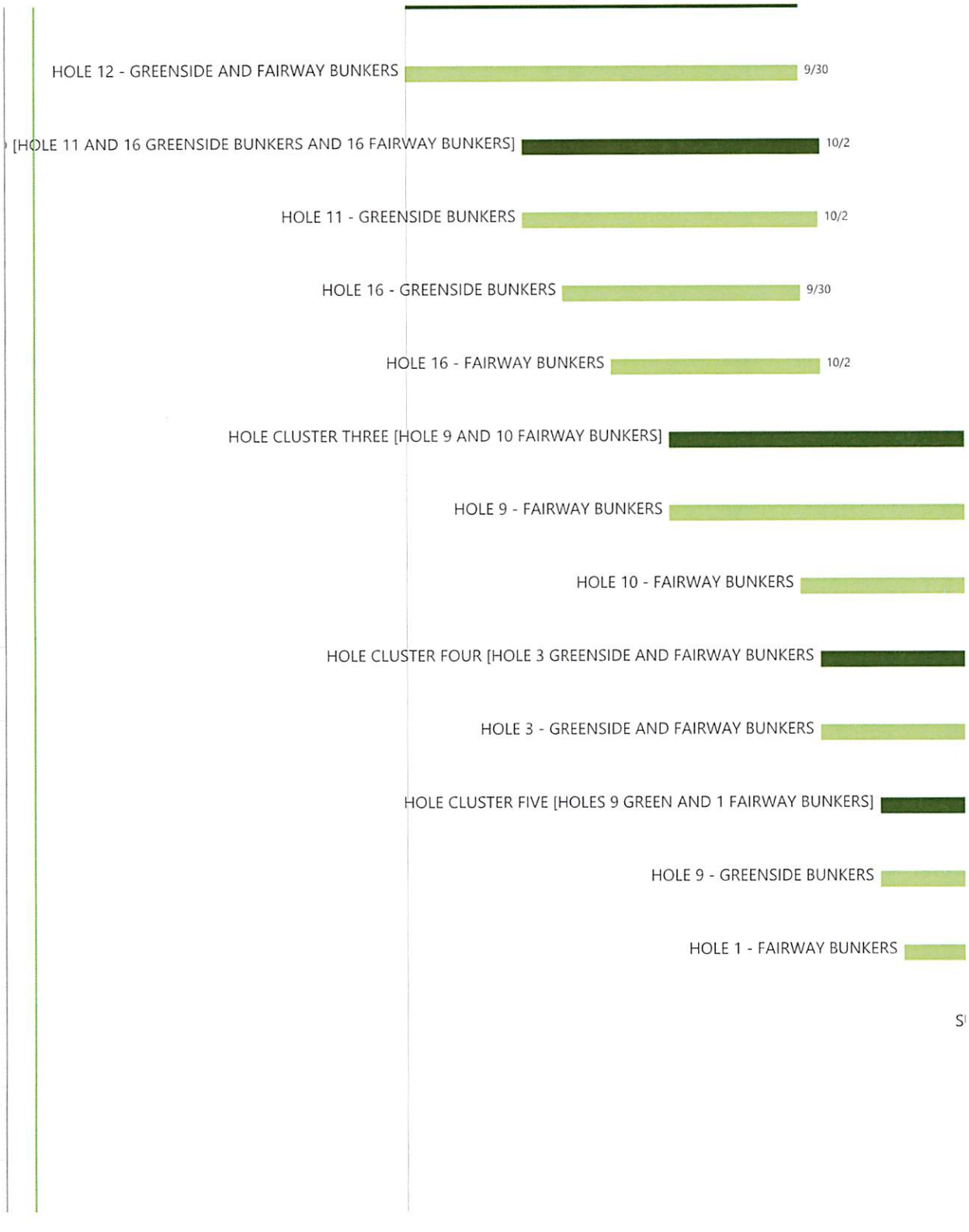

Notice of Exemption

To: Placer County Clerk
Recorder's Office
2954 Richardson Drive
Auburn, CA 95603

From: City of Roseville
Development Services Dept.
311 Vernon Street
Roseville, CA 95678

Project Title: Woodcreek Golf Course Bunker Renovation – Contract Purchase Agreement

Project Location(s): Woodcreek Oaks Golf Course, 5880 Woodcreek Oaks Boulevard, Roseville, CA 95747.

Project Description: The project is the approval of a contract purchase agreement for the renovation of the sand bunkers located at Woodcreek Oaks Golf Course. The existing sand bunkers have been in place since the golf course opened in 1995 and have been failing to drain and therefore do not meet standards. The purpose of this project is to renovate and rebuild existing sand bunkers and to eliminate several sand bunkers to improve conditions and playability for all levels of golfers. Department of Parks, Recreation & Libraries staff have selected a renovation design that considers bunker locations, shape, size, drainage, liners, surrounding sod and irrigation. Overall, the square footage of bunkers will be reduced by approximately 30% of the existing layout which will aid in improving conditions and playability while reducing future maintenance expense. There would be no expansion of use or environmentally sensitive areas adjacent to the project site.

Public Agency Approving Project: Roseville City Council

Agency/Individual Carrying Out Project: City of Roseville Parks, Recreation and Libraries Department

Reason why this Project is Exempt: This project qualifies for a Class 1 Exemption as described in Section 15301 of the California Environmental Quality Act (CEQA) guidelines which states:

> "Class 1 consists of the… repair…[and] minor alteration of public… facilities…or topographical features involving negligible or no expansion of use." "

The project involves a contract purchase agreement for the renovation of the sand bunkers at Woodcreek Oaks Golf Course. No environmentally sensitive resources are located within the project site; therefore the Class 1 Exemption is applicable to the proposed project.

Lead Agency Contact Person: Robert Nakamura, Parks, Recreation and Libraries Department, 316 Vernon Street, Roseville, CA 95678. (916) 774-5135.

Signature: _____ Date: 07-24-2024

Jessica Lynch, Environmental Coordinator
City of Roseville

COUNCIL COMMUNICATION

CC #: 3482
File #: 0900-03

Title:	Cirby Substation 12kV Switchgear Replacement Civil Construction - Award of Contract
Contact:	Austin Kurth 916-774-5661 akurth@roseville.ca.us

Meeting Date: 8/21/2024
Item #: 7.4.

RECOMMENDATION TO COUNCIL

Staff recommends that the City Council adopt a resolution to approve an agreement with Interstate Construction, Inc. for construction of the Cirby substation 12kV switchgear replacement project and authorize the City Manager to execute it. In addition, staff recommends that the City Council authorize the City Manager, or his designee, to approve change orders up to 10% of the contract amount.

BACKGROUND

The construction work at Cirby substation is required for the replacement of the existing switchgear that has reached its end of life. Replacement of this equipment is necessary to maintain system reliability. The new switchgear will have a different footprint than the existing switchgear and meet seismic requirements which have changed since the late 1970's when the existing concrete foundation was constructed. Removal of the foundation and installation of a new one, as well as necessary conduit and other ancillary work is required for the installation of the new switchgear.

The City Council approved the plans and specifications and authorized the call for bids at the May 1, 2024 meeting. Subsequently, Roseville Electric solicited proposals through RFQ 07-087 Cirby Substation Replacement Civil Construction, seeking a contractor to provide the necessary construction services. Staff received three bids which were opened on June 10, 2024. After staff review of the proposals, Interstate Construction, Inc. was determined to be the lowest responsive bidder.

FISCAL IMPACT

The fiscal impact of the agreement with Interstate Construction, Inc. is $248,280 with a 10%, or $24,828, contingency not to exceed $273,108. Funds are available in the Electric Department's FY2024-25 budget in the Electric Fund.

ENVIRONMENTAL REVIEW

The proposed work of the Cirby substation switchgear replacement project involves the replacement of existing structures and facilities. This activity is categorically exempt from CEQA as a Class 2 Exemption (State CEQA Guidelines Section 15302). The Exemption has been prepared and no further CEQA action is required.

CITY COUNCIL STRATEGIC PLAN/OVERARCHING GOALS

Goal E - Deliver exceptional city services
Goal F - Invest in well-planned infrastructure and growth

Respectfully Submitted,

Austin Kurth, Power Engineer

Dan Beans, Electric Utility Director

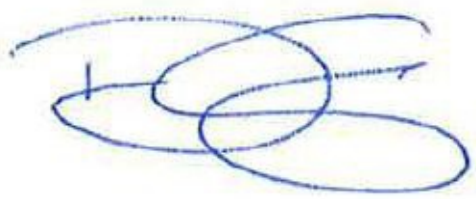

_____
Dominick Casey, City Manager

ATTACHMENTS:

Description

Resolution 24-284

Agreement

Interstate Construction Proposal

CEQA_Cirby Substation 12kV Switchgear Replacement

RESOLUTION NO. 24-284

APPROVING AN AGREEMENT, BY AND BETWEEN THE CITY OF ROSEVILLE AND INTERSTATE CONSTRUCTION, INC., AND AUTHORIZING THE CITY MANAGER TO EXECUTE IT ON BEHALF OF THE CITY OF ROSEVILLE

WHEREAS, an Agreement for the Cirby Subtation 12kV Switchgear Replacement Civil Construction project, by and between the City of Roseville and Interstate Construction, Inc., has been reviewed by the City Council; and

NOW, THEREFORE, BE IT RESOLVED by the Council of the City of Roseville that said Agreement is hereby approved and that the City Manager is authorized to execute it on behalf of the City of Roseville.

BE IT FURTHER RESOLVED that the City Manager or his designee is authorized to approve change orders for the project, consistent with the contract terms, provided that the net cost of all change orders shall not exceed ten percent (10%) of the contract price.

PASSED AND ADOPTED by the Council of the City of Roseville this____day of _____, 2024, by the following vote on roll call:

AYES COUNCILMEMBERS:

NOES COUNCILMEMBERS:

ABSENT COUNCILMEMBERS:

_____
MAYOR

ATTEST:

_____
City Clerk

AGREEMENT

THIS AGREEMENT, is made and entered into this _____ day of _____, 20_____, by and between the City of Roseville, a municipal corporation, ("CITY"), and Interstate Construction, Inc., a Corporation, ("CONTRACTOR"); and

WITNESETH:

WHEREAS, the City Council of the CITY, at a meeting held on the 1st day of May, 20 24, approved plans and specifications for the Cirby Substation Switchgear Replacement Civil Construction and directed the City Clerk to advertise for sealed proposals for doing said work and providing that bids be submitted on the 10th day of June, 20 24; and

WHEREAS, the City Clerk, thereafter duly and regularly caused a notice to be published in the manner and for the time prescribed by law; and

WHEREAS, CONTRACTOR, pursuant to the provisions of said notice duly filed a bid with the City Clerk, a true copy of which bid is now on file in the office of the City Clerk, and is hereby referred to and by this reference made a part hereof as fully as if set forth at length herein; and

WHEREAS, all bids received pursuant to said notice were opened and examined and publicly declared at the time specified in said advertisement for bids and at a meeting of the City Council held on the _____ day of _____, 20 24, the Council found and

declared the bid of CONTRACTOR to be the lowest responsible bid and thereupon awarded a contract to CONTRACTOR to do the work referred to in the aforementioned specifications.

NOW, THEREFORE, the parties agree as follows:

1. THE WORK. CONTRACTOR agrees:

a. To do the work and furnish all the labor, materials, tools, supplies, equipment, superintendence, insurance, and bonds required for the Cirby Substation Switchgear Replacement Civil Construction in accordance with the Contract Documents (the Work).

b. To do and perform the Work contemplated hereby in a good and workmanlike manner under the direction of and to the satisfaction of the Director of Public Works of the City of Roseville.

2. PAYMENT. CITY shall pay CONTRACTOR Two hundred and forty-eight thousand, two hundred and eighty dollars ($ 248,280) for the Work to be done under this Agreement in accordance with the Contract Documents.

3. CONTRACT DOCUMENTS. The complete Agreement between the parties hereto consists of the following documents:

a. The advertisement for bids (including the notice to bidders, instructions to bidders and proposals);

b. The accepted bid;

c. Plans and specifications (including general conditions, supplemental conditions, special provisions and construction details);

d. Bonds and insurance required by the specifications; and

e. This contract.

All documents specified above are intended to operate so that any work called for in any one and not mentioned in the other, or vice versa, is to be executed the same as if mentioned in all said documents.

4. LIQUIDATED DAMAGES. In the event CONTRACTOR does not complete the Work within the time specified, CONTRACTOR agrees that CITY will suffer damages. Inasmuch as the actual damages which would result from such breach by CONTRACTOR under this Agreement are uncertain, and would be impractical or extremely difficult to fix, CONTRACTOR agrees that it shall pay, or CITY shall deduct from CONTRACTOR's fee, the amount of $ 500 per day as liquidated damages, in the event of such delay.

5. TIME OF COMPLETION. Time is of the essence of this Agreement. CONTRACTOR shall complete all Work under the Contract Documents within 125 Days of the date of this Contract. CONTRACTOR shall begin work by the date specified in the "Notice to Proceed" letter and shall diligently prosecute all of the Work under this Contract in all parts and requirements as defined in the Contract Documents.

6. SERVICE OF NOTICE. Any notice required or permitted to be given under this Agreement shall be deemed given when (a) personally delivered to the recipient identified below; (b) mailed by registered or certified mail, return receipt requested, postage pre-paid, to the address specified below; or (c) sent by facsimile, with confirmation of receipt, to the facsimile number identified below.

CITY OF ROSEVILLE	CONTRACTOR
Austin Kurth	Interstate Construction, Inc.
2090 Hilltop Circle	9245 Sierra College Blvd #150
Roseville, CA 95747	Roseville, CA 95661
Fax: 916-784-3797	916-357-5480

CITY may also act through either its architect or construction manager if CITY expressly gives notice to CONTRACTOR, in writing, that CITY's designee has authority to act for CITY in a specific capacity.

7. DISPUTES. Disputes arising from this Agreement will be determined in accordance with the Contract Documents and Public Contract Code Sections 10240-10240.13.

8. GOVERNING LAW. This Agreement shall be governed by and construed in accordance with the laws of the State of California.

9. INDEPENDENT CONTRACTOR. CONTRACTOR shall act as an independent contractor, and covenants and agrees that it will conduct itself consistent with such status, that it will neither hold itself out as, nor claim to be, an officer or employee of CITY by reason of this Agreement.

10. SUCCESSORS IN INTEREST. This Agreement shall be binding upon the heirs, successors, executors, administrators and assigns of the respective parties hereto.

11. MODIFICATION. This Agreement and each provision contained herein may be waived, amended, supplemented or eliminated only by mutual written agreement of the parties.

12. SEVERABILITY. If any of the provisions contained in this Agreement are for any reason held invalid or unenforceable, such holding shall not affect the remaining provisions or the validity and enforceability of the Agreement as a whole.

13. INTEGRATED AGREEMENT. This is an integrated agreement and contains all of the terms, considerations, understanding and promises of the parties. It shall be read as a whole.

14. CONTRACTORS LICENSE LAW. CONTRACTORS ARE REQUIRED BY LAW TO BE LICENSED AND REGULATED BY THE CONTRACTORS' STATE LICENSE

BOARD WHICH HAS JURISDICTION TO INVESTIGATE COMPLAINTS AGAINST CONTRACTORS IF A COMPLAINT REGARDING A PATENT ACT OR OMISSION IS FILED WITHIN FOUR (4) YEARS OF THE DATE OF THE ALLEGED VIOLATION. A COMPLAINT REGARDING A LATENT ACT OR OMISISON PERTAINING TO STRUCUTRAL DEFECTS MUST BE FILED WITHIN TEN (10) YEARS OF THE DATE OF THE ALLEGED VIOLATION. ANY QUESTIONS CONCERNING A CONTRACTOR MAY BE REFERRED TO THE REGISTRAR, CONTRACTORS' STATE LICENSE BOARD, P.O. BOX 26000, SACRAMENTO, CALIFORNIA 95826.

IN WITNESS WHEREOF, the City of Roseville, a municipal corporation, has authorized the execution of this Agreement in duplicate by its City Manager and attestation by its City Clerk under authority of Resolution No. _____, adopted by the Council of the City of Roseville on the ____day of _____, 20__24__, and CONTRACTOR has caused this Agreement to be duly executed.

CITY OF ROSEVILLE, a municipal corporation

BY:_____
DOMINICK CASEY
City Manager

ATTEST:

BY:_____
CARMEN AVALOS
City Clerk

Interstate Construction, Inc., a Corporation

BY: _____
its: President

and

BY: _____
its: _____

APPROVED AS TO FORM:

BY: _____
MICHELLE SHEIDENBERGER
City Attorney

APPROVED AS TO SUBSTANCE:

BY: _____

Print Name:_____

Title:_____

PROPOSAL TO THE DEPARTMENT OF Electric

Project: Cirby Substation 12kV Switchgear Replacement

Name of Bidder Interstate Construction Inc. Business Phone (916) 357-5477

Business Address 9245 Sierra College Blvd., Suite 150 - Roseville, CA 95661

Place of Business (Same as Above) Placer County

Contractor's License No. 341026

License Expiration Date 10/31/2024

License Classification Type A, B, C-4, C10, C20, C34, C36

DIR Registration No. 1000000620

Type of business organization: Coroporation

*If a Corporation, incorporated under the laws of the State of: California

City of Roseville Business License No. 00812871

The undersigned Bidder herewith submits this Proposal and binds itself on award by the City of Roseville under this bid to execute a Contract in accordance with its bid and the Contract Documents.

The Notice to Contractors, Instructions to Bidders, Form of Agreement, Specifications, General Conditions, Supplemental Conditions, Contract Drawings, and Addenda, if any, are made part of this bid and all provisions thereof are hereby accepted, and all representations and warranties are required thereby are hereby affirmed.

The work to be done is described in the Bidding Documents entitled Cirby Substation 12kV Switchgear Replacement, City of Roseville, California. This offer shall be irrevocable for a period of sixty (60) Days after the date on which bids are opened.

The undersigned Bidder understands that any clarification made to the above or any new and different conditions or information submitted on or with its Proposal, other than that requested, may render the bid non-responsive.

The undersigned, as Bidder, declares that the only persons or parties interested in this Proposal as principals are those named herein; that this Proposal is made without collusion with any other person, firm, or corporation; that the Bidder has carefully examined the location of the proposed Work, the attached Form of Agreement, and the plans, Specifications, and other Contract Documents; and agrees if this Proposal is accepted, that it will contract with the City of Roseville, in the form of a copy of the Agreement contained in the Project Manual, to provide all necessary machinery, tools, apparatus and other means of construction, and to do all the work and furnish all the materials specified in the Contract Documents, in the manner and time therein prescribed, and according to the requirements of the Director, as therein set forth, and that the Bidder will take in full payment therefore prices indicated in the Schedule of Bid Items, including all work modified by addendum numbers 001. (IF NONE, STATE NONE).

Bids are required for all Bid Items. The amount of the Bid for comparison purposes will be the total of all items awarded.

The Bidder shall set forth for each item of work, in clearly legible figures, an item ("unit") price and a total for the item in the respective spaces provided for this purpose in the Schedule of Bid Items.

The prices included within the Schedule of Bid Items include all costs for labor, materials, tools, equipment, services, Subcontractors, suppliers, taxes, insurance, shipment, delivery, overhead, profit, and for all other costs necessary to perform the Work in accordance

with the Contract Documents.

Accompanying this Proposal is Bidder's Bond.

(Notice: Insert the words "Cash $_____," "Cashier's Check," "Certified Check," or "Bidder's Bond," as the case may be, in an amount equal to at least ten percent (10%) of the total of the Bid.)

The names of all persons interested in the foregoing Proposal as Principals, are as follows: Robert Riedel - President

If SOLE OWNER, execute here:

I sign as sole owner of the business named above:

If PARTNERSHIP, one or more partners sign here:

The undersigned certify that we are partners in the business named above and that we sign this bid with the full authority to do so:

If CORPORATION, execute here:

Corporate Name: Interstate Construction, Inc.

Incorporated under the laws of the State of California

The undersigned certify that they sign this bid with the full and proper authorization so to do:

By _____
*Signature of Authorized Official**

President
Title

Robert Riedel
Typewritten or Printed Name

By _____
*Signature of Authorized Official**

Title

Typewritten or Printed Name

If JOINT VENTURE, execute here:

Joint Venture name composed of: _____

The undersigned certify that they sign this bid with the full and proper authorization so to do:

_____
*Signature of Authorized Official**

Title

Typewritten or Printed Name

_____
*Signature of Authorized Official**

Title

Typewritten or Printed Name

*If Bidder is a partnership or Joint Venture, give the full names of all partners and/or Joint Ventures in the space provided (use additional sheet if required). If Bidder is a corporation, two signatures are required as follows: (1) the Chairman, President, or Vice-President and (2) the Secretary, Assistant Secretary, Chief Financial Officer, Treasurer, or Assistant Treasurer. In the alternative, this Agreement may be executed by a single officer or a person other than an officer provided that evidence satisfactory to City is provided demonstrating that such individual is authorized to bind the corporation (example, a copy of a certified resolution from the corporation's board or a copy of the corporation's bylaws).

[LIST OF SUBCONTRACTORS FOLLOWS ON NEXT PAGE.]

LIST OF SUBCONTRACTORS

Contractor's Name: Interstate Construction, Inc.

The Bidder is required to furnish the following information in accordance with the provisions of Section 4100 and 4114, inclusive, of the Public Contract Code of the State of California. This list and information shall include all Subcontractors that perform work, provide labor or render services to the Bidder in connection with the Project in an amount in excess of one-half of one percent (0.5%) of the total amount of the Bidder Grand Total Price.

PORTION/ TYPE OF WORK	% OF CONTRACT	SUB-CONTRACTOR'S NAME	CONTRACTOR LICENSE NO.	DIR REG NO.	BUSINESS ADDRESS (CITY, STATE)

SECURITY FOR COMPENSATION CERTIFICATE

(Required by California Labor Code Section 1861)

TO: City Council
City of Roseville

I am aware of the provisions of Section 3700 of the Labor Code which require every employer to be insured against liability for workers' compensation or to undertake self-insurance in accordance with the provisions of that code, and I will comply with such provisions before commencing the performance of the work of this Contract.

Interstate Construction, Inc.

(Signature of Bidder)

9245 Sierra College Blvd., Suite 150

Roseville, CA 95662

Business Address

(916) 357-5477

Telephone

BIDDER'S BOND

City Council of the City of Roseville

KNOW ALL MEN BY THESE PRESENTS:

That we Interstate Construction, Inc., as PRINCIPAL, and The Ohio Casualty Insurance Company

a, New Hampshire corporation and duly authorized to transact business under the laws of the State of California, as SURETY, are held and firmly bound unto the City of Roseville in the penal sum of Ten Percent of the Amount Bid dollars ($ 10% of amount bid), being at least TEN PERCENT (10%) OF THE TOTAL AMOUNT OF THE BID of the Principal above named, submitted by said Principal to the City of Roseville, acting by and through the Public Works Director, for the work described below, for the payment of which sum in lawful money of the United States, well and truly to be made, to the Director of the Department to which said Bid was submitted, we bind ourselves, our heirs, executors, administrators and successors, jointly and severally, firmly by these presents.

THE CONDITION OF THIS OBLIGATION IS SUCH,

That whereas the Principal has submitted the above-mentioned Bid to the City Council of the City of Roseville, as aforesaid, for certain construction specifically described as follows, for which Bids are to be opened at the Office of the City Clerk located at 311 Vernon Street, Roseville, California, on June 10, 2024 FOR

Cirby Substation 12kV Switchgear Replacement

(Copy here the exact title of work as it appears on the Proposal.)

NOW, THEREFORE, IF THE AFORESAID PRINCIPAL is awarded the Contract and, within the time and manner required under the Contract Documents, after the prescribed forms are presented for signature, enters into a written Contract, in the prescribed form, in accordance with the Bid, and files all insurance and two (2) Bonds with the Department, one (1) to guarantee Faithful Performance and the other to guarantee Payment for Labor and Materials, as required by law, then this obligation shall be null and void; otherwise, it shall be and remain in full force and effect.

IN WITNESS WHEREOF, we have hereunto set our hands and seals on this 30th day of May, 20 24.

Interstate Construction, Inc. (Seal)

(Seal)

(Seal)

Principal

The Ohio Casualty Insurance Company (Seal)

(Seal)

Sharon Smith, Attorney In Fact (Seal)

Surety

175 Berkeley Street, Boston, MA 02116

Business Address

NOTE: To be considered complete, both the Principal and the Surety must sign this Bidder's Bond. In addition, signatures of those executing for the Surety must be properly acknowledged.

ACKNOWLEDGMENT

A notary public or other officer completing this certificate verifies only the identity of the individual who signed the document to which this certificate is attached, and not the truthfulness, accuracy, or validity of that document.

State of California
County of Sacramento)

On May 30, 2024 before me, Kathleen Le, Notary Public,
(insert name and title of the officer)

personally appeared Sharon Smith,
who proved to me on the basis of satisfactory evidence to be the person(s) whose name(s) is/are subscribed to the within instrument and acknowledged to me that he/she/they executed the same in his/her/their authorized capacity(ies), and that by his/her/their signature(s) on the instrument the person(s), or the entity upon behalf of which the person(s) acted, executed the instrument.

I certify under PENALTY OF PERJURY under the laws of the State of California that the foregoing paragraph is true and correct.

WITNESS my hand and official seal.

Signature _____ **(Seal)**

ARS3 KATHLEEN LE
COMM. # 2380925
NOTARY PUBLIC CALIFORNIA
COUNTY OF SACRAMENTO
Comm. Expires OCT 31, 2025 ARS3

This Power of Attorney limits the acts of those named herein, and they have no authority to bind the Company except in the manner and to the extent herein stated.

Liberty Mutual Insurance Company
The Ohio Casualty Insurance Company
West American Insurance Company

Certificate No: **8211474-971829**

POWER OF ATTORNEY

KNOWN ALL PERSONS BY THESE PRESENTS: That The Ohio Casualty Insurance Company is a corporation duly organized under the laws of the State of New Hampshire, that Liberty Mutual Insurance Company is a corporation duly organized under the laws of the State of Massachusetts, and West American Insurance Company is a corporation duly organized under the laws of the State of Indiana (herein collectively called the "Companies"), pursuant to and by authority herein set forth, does hereby name, constitute and appoint, Breanna Boatright, Tony Clark, Elizabeth Collodi, Brad Espinosa, Matthew Foster, Dineen Fraser, John Hopkins, Jennifer Lakmann, Kathleen Le, Kris Lopes, Jason March, Cassandra Medina, Deanna Quintero, Renee Ramsey, Bill Rapp, Paula Senna, Pam Sey, Sharon Smith, Mike Taylor, Peggy Trusty, Sara Walliser, Phil Watkins, Samantha Watkins, John Weber, Mindy Whitehouse, Steven L. Williams

all of the city of Chico state of CA each individually if there be more than one named, its true and lawful attorney-in-fact to make, execute, seal, acknowledge and deliver, for and on its behalf as surety and as its act and deed, any and all undertakings, bonds, recognizances and other surety obligations, in pursuance of these presents and shall be as binding upon the Companies as if they have been duly signed by the president and attested by the secretary of the Companies in their own proper persons.

IN WITNESS WHEREOF, this Power of Attorney has been subscribed by an authorized officer or official of the Companies and the corporate seals of the Companies have been affixed thereto this 12th day of March, 2024.

Liberty Mutual Insurance Company
The Ohio Casualty Insurance Company
West American Insurance Company

By: _____
David M. Carey, Assistant Secretary

State of PENNSYLVANIA
County of MONTGOMERY ss

On this 12th day of March, 2024 before me personally appeared David M. Carey, who acknowledged himself to be the Assistant Secretary of Liberty Mutual Insurance Company, The Ohio Casualty Company, and West American Insurance Company, and that he, as such, being authorized so to do, execute the foregoing instrument for the purposes therein contained by signing on behalf of the corporations by himself as a duly authorized officer.

IN WITNESS WHEREOF, I have hereunto subscribed my name and affixed my notarial seal at Plymouth Meeting, Pennsylvania, on the day and year first above written.

Commonwealth of Pennsylvania - Notary Seal
Teresa Pastella, Notary Public
Montgomery County
My commission expires March 28, 2025
Commission number 1126044
Member, Pennsylvania Association of Notaries

By: _____
Teresa Pastella, Notary Public

This Power of Attorney is made and executed pursuant to and by authority of the following By-laws and Authorizations of The Ohio Casualty Insurance Company, Liberty Mutual Insurance Company, and West American Insurance Company which resolutions are now in full force and effect reading as follows:

ARTICLE IV – OFFICERS: Section 12. Power of Attorney.
Any officer or other official of the Corporation authorized for that purpose in writing by the Chairman or the President, and subject to such limitation as the Chairman or the President may prescribe, shall appoint such attorneys-in-fact, as may be necessary to act in behalf of the Corporation to make, execute, seal, acknowledge and deliver as surety any and all undertakings, bonds, recognizances and other surety obligations. Such attorneys-in-fact, subject to the limitations set forth in their respective powers of attorney, shall have full power to bind the Corporation by their signature and execution of any such instruments and to attach thereto the seal of the Corporation. When so executed, such instruments shall be as binding as if signed by the President and attested to by the Secretary. Any power or authority granted to any representative or attorney-in-fact under the provisions of this article may be revoked at any time by the Board, the Chairman, the President or by the officer or officers granting such power or authority.

ARTICLE XIII – Execution of Contracts: Section 5. Surety Bonds and Undertakings.
Any officer of the Company authorized for that purpose in writing by the chairman or the president, and subject to such limitations as the chairman or the president may prescribe, shall appoint such attorneys-in-fact, as may be necessary to act in behalf of the Company to make, execute, seal, acknowledge and deliver as surety any and all undertakings, bonds, recognizances and other surety obligations. Such attorneys-in-fact subject to the limitations set forth in their respective powers of attorney, shall have full power to bind the Company by their signature and execution of any such instruments and to attach thereto the seal of the Company. When so executed such instruments shall be as binding as if signed by the president and attested by the secretary.

Certificate of Designation – The President of the Company, acting pursuant to the Bylaws of the Company, authorizes David M. Carey, Assistant Secretary to appoint such attorneys-in-fact as may be necessary to act on behalf of the Company to make, execute, seal, acknowledge and deliver as surety any and all undertakings, bonds, recognizances and other surety obligations.

Authorization – By unanimous consent of the Company's Board of Directors, the Company consents that facsimile or mechanically reproduced signature of any assistant secretary of the Company, wherever appearing upon a certified copy of any power of attorney issued by the Company in connection with surety bonds, shall be valid and binding upon the Company with the same force and effect as though manually affixed.

I, Renee C. Llewellyn, the undersigned, Assistant Secretary, The Ohio Casualty Insurance Company, Liberty Mutual Insurance Company, and West American Insurance Company do hereby certify that the original power of attorney of which the foregoing is a full, true and correct copy of the Power of Attorney executed by said Companies, is in full force and effect and has not been revoked.

IN TESTIMONY WHEREOF, I have hereunto set my hand and affixed the seals of said Companies this 30th day of May, 2024.

By: _____
Renee C. Llewellyn, Assistant Secretary

Not valid for mortgage, note, loan, letter of credit, currency rate, interest rate or residual value guarantees.

For bond and/or Power of Attorney (POA) verification inquiries, please call 610-832-8240 or email HOSUR@libertymutual.com

CALIFORNIA ACKNOWLEDGMENT CIVIL CODE § 1189

A notary public or other officer completing this certificate verifies only the identity of the individual who signed the document to which this certificate is attached, and not the truthfulness, accuracy, or validity of that document.

State of California
County of Sacramento }

On June 5, 2024 (Date) before me, Elizabeth Patterson, Notary Public (Here Insert Name and Title of the Officer)

personally appeared Robert Alan Riedel (Name(s) of Signer(s))

who proved to me on the basis of satisfactory evidence to be the person(s) whose name(s) is/are subscribed to the within instrument and acknowledged to me that he/she/they executed the same in his/her/their authorized capacity(ies), and that by his/her/their signature(s) on the instrument the person(s), or the entity upon behalf of which the person(s) acted, executed the instrument.

ELIZABETH PATTERSON
Notary Public - California
Sacramento County
Commission # 2452422
My Comm. Expires Jul 4, 2027

I certify under PENALTY OF PERJURY under the laws of the State of California that the foregoing paragraph is true and correct.

WITNESS my hand and official seal.

Signature Elizabeth Patterson

Place Notary Seal and/or Stamp Above

Signature of Notary Public

OPTIONAL

Completing this information can deter alteration of the document or fraudulent reattachment of this form to an unintended document.

Description of Attached Document

Title or Type of Document: _____

Document Date: _____ Number of Pages: _____

Signer(s) Other Than Named Above: _____

Capacity(ies) Claimed by Signer(s)

Signer's Name: _____	Signer's Name: _____
☐ Corporate Officer – Title(s): _____	☐ Corporate Officer – Title(s): _____
☐ Partner – ☐ Limited ☐ General	☐ Partner – ☐ Limited ☐ General
☐ Individual ☐ Attorney in Fact	☐ Individual ☐ Attorney in Fact
☐ Trustee ☐ Guardian or Conservator	☐ Trustee ☐ Guardian or Conservator
☐ Other: _____	☐ Other: _____
Signer is Representing: _____	Signer is Representing: _____

©2019 National Notary Association

Project Cirby Substation 12kV Switchgear Replacement

Contractor Interstate Construction, Inc.

SCHEDULE OF BID ITEMS

BID ITEM	ITEM DESCRIPTION	UNIT	TOTAL AMOUNT ($)
1	Concrete foundation, conduits, and all associated work at Cirby Substation	Lump Sum	$212,893
2	Concrete stairs, path and all associated work at Cirby Substation	Lump Sum	$35,387

FIRMS QUALIFICATIONS AND EXPERIENCE FORM

Requirements:
Contractor and its foreman/supervisor assigned for this project must have performed construction projects in at least three electric substations at 60-kV or above, during the last fifteen years.

Foreman/Supervisor Name: Jeff Kimes / Cesar Gutierrez

Project Name and $ amount: 6710 - Industrial Substation Switchgear #1 Replacement Civil Construction - $179,880

Project Contact Name and #: Austin Kurth - (916) 774-5661

Project Location: 8201 Industrial Blvd., Roseville, CA

Project Date and Duration: 10-07-22 - 4-14-23

Project Description: 6580 -6593 -This project consists of the following: clearing and grubbing of designated existing concrete foundations, construction of new reinforced concrete foundation, construction of a ramp and stairs, installation of underground electrical conduits, extension of the existing concast trench system, grounding and grounding pigtails as shown on drawings and as needed, and repair of any part of the substation yard that is disturbed

---

Project Name and $ amount: 6Industrial Switchgear Replacement and Fiddyment 230/60kV Transformer Addition Project - $533,737

Project Contact Name and #: Chris Porter

Project Location: 8201 Industrial Blvd., Roseville, CA

Project Date and Duration: 9-15-20 - 3-19-21

Project Description: Replace the bay 2 medium voltage switchgear concrete foundation at Industrial Substation. This project consists of the following: clearing and grubbing of existing concrete foundation, construction of new reinforced concrete foundation, installation of underground electrical conduits, installation and reconfiguration of concast trench system, grounding and grounding pigtails as shown on drawings and as needed, and repair of any part of the substation yard that is disturbed.

Project Name and $ amount: Roseville Electric southeast Substation - Circuit Breaker Concrete Pad - $20,842

Project Contact Name and #: VINCE BOTTONI AT (916) 774-5641

Project Location: Southeast Substation

Project Date and Duration: 09-12-2016 - 10-10-16

Project Description: Demo (grub) three reinforced concrete 3'-0 piers and one 4'-0 pier far enough to allow for the installation of the circuit breaker pad, Demo existing control conduit box, nstall new 4'x11'x18" reinforced concrete pad for the circuit breaker, with 12" below grade, Provide 4 anchor bolts for the circuit breaker, Install approximately 1 O' of conduit (Qty. 3 - 3" Sch. 40), Install two SOOMCM copper grounding pigtails from existing grid (also 500MCM) to new circuit breaker, Bobcat would have no issue accessing site, Substation will not be completely de-energized - will need to work in proximity of energized components. WORK SCOPE IS PER PROPOSAL NUMBER 20160 08-17 01

NONCOLLUSION DECLARATION TO BE EXECUTED BY
BIDDER AND SUBMITTED WITH BID

The undersigned declares:

I am the Robert Riedel of Interstate Construction, Inc., the party making the foregoing bid.

The bid is *not* made in the interest of, or on behalf of, any undisclosed person, partnership, company, association, organization, or corporation. The bid is genuine and not collusive or sham. The Bidder has not directly or indirectly induced or solicited any other Bidder to put in a false or sham bid. The Bidder has not directly or indirectly colluded, conspired, connived, or agreed with any Bidder or anyone else to put in a sham bid, or to refrain from bidding. The Bidder has not in any manner, directly or indirectly, sought by agreement, communication, or conference with anyone to fix the bid price of the Bidder or any other Bidder, or to fix any overhead, profit, or cost element of the bid price, or of that of any other Bidder. All statements contained in the bid are true. The Bidder has not, directly or indirectly, submitted his or her bid price or any breakdown thereof, or the contents thereof, or divulged information or data relative thereto, to any corporation, partnership, company, association, organization, bid depository, or to any member or agent thereof, to effectuate a collusive or sham bid, and has not paid, and will not pay, any person or entity for such purpose.

Any person executing this declaration on behalf of a Bidder that is a corporation, partnership, joint venture, limited liability company, limited liability partnership, or any other entity, hereby represents that he or she has full power to execute, and does execute, this declaration on behalf of the Bidder.

I declare under penalty of perjury under the laws of the State of California that the foregoing is true and correct and that this declaration is executed on June, 10, 2024 [date], at Roseville [city], California [state].

(Signature of Declarant)

DISQUALIFICATION QUESTIONNAIRE

The Bidder shall complete, under the penalty of perjury, the following questionnaire:

Has the Bidder, any officer of the Bidder, or any employee of the Bidder who has proprietary interest in the Bidder, ever been disqualified, removed, or otherwise prevented from bidding on, or completing a federal, state, or local government project because of a violation of law or a safety regulation?

Yes_____ No X

If the answer is yes, explain the circumstances in the following space.

_____

_____

_____

_____

_____

_____

NAME OF BIDDER: Interstate Construction, Inc.

SIGNATURE OF BIDDER: _____

TITLE OF BIDDER: President

DATE: Robert Riedel

ACKNOWLEDGEMENT OF INSURANCE AND BOND REQUIREMENTS

Included in the Bid Price is full compensation for the requirements set forth in the INSURANCE BROKER INFORMATION PACKET of the Project Manual.

NAME OF BIDDER: Interstate Construction, Inc.

SIGNATURE OF BIDDER: _____

TITLE OF BIDDER: President

DATE: June, 10, 2024

DISCLAIMER OF WARRANTIES AND ACCURACY OF DATA

Although soil and site investigation reports have been obtained from sources believed to be reliable, no warranty expressed or implied is made regarding accuracy, adequacy, completeness, legality, reliability or usefulness of any information contained therein. These reports are subject to change at any time, may be incomplete, and/or may contain errors. This information is provided for informational purposes only. The City of Roseville provides this information on an "as is" basis. Warranties of any kind, express or implied, or statutory, including but not limited to the implied warranties of merchantability, and fitness for a particular purpose ARE DISCLAIMED to any party viewing these documents or to any third party.

The City of Roseville does not accept and expressly disclaims liability to any party viewing such information, or to any third party whatsoever, for any loss, damage, or injury (including incidental or consequential damages) whether such loss, damage, or injury is the result of negligence, willful or intentional misconduct, or any other cause.

I have read and acknowledged the above disclaimer and agree to hold harmless the City of Roseville on any theory of liability for any loss, damage or injury whether in contract, strict liability or tort arising in any way out of the use or contents of the released information or documents described above or the performance of the work called for herein.

Robert Riedel
Print Name

Signature

Interstate Construction, Inc.
Name of Business/Company/Corporation

June 10, 2024
Date

9245 Sierra College Blvd., Suite 150 - Roseville, CA 95661
Address

(916) 357-5477
Phone

END OF PROPOSAL

Important

5/28/2024

TO: Proposers

FROM: Austin Kurth, Electric Department

RE: RFQ #07-087 Cirby Switchgear Civil Construction

Mandatory Pre-Bid Conference – 5/21/2024 @ 9:00AM

**************Addendum #1**************

Staff:

- Austin Kurth
- Mike Berge

Contractors:

Company: Accelerated Construction & Metal, LLC

Name: Jeff Long ***Phone:*** 209-612-3397

Name: Wyatt Trammell ***Phone:*** 209-404-6632

Company: Interstate Construction

Name: Jeff Kimes ***Phone:*** 916-836-5801

Company: Royal Electric

Name: Andy Schaefer ***Phone:*** 916-804-0655

Company: Volition Co

Name: Jimmy Copper ***Phone:*** 775-229-2776

Questions asked during mandatory pre-bid job walk:

Question 1: What are the required bend radius for the 4", 5", and 6" conduits?

Answer 1: The required bend radius for the conduits is show on page 10 of Roseville's Commercial Specification which can be found on the side menu in the link below. The bend radius for 5" conduit must match the requirements for 6" conduit as described in the Commercial Specifications.

https://www.roseville.ca.us/cms/One.aspx?portalId=7964922&pageId=19058216

Question 2: Are there pictures of the inside of the switch vault and pull box?

Answer 2: Please see the attached photos of the switch vault and pull box. Note that the switch vault and pull box will be de-energized during construction with power cables removed. The drawing on page four of this document shows the directions of each photo of the switch vault.

Question 3: What are the requirement for hand digging versus vactoring near existing underground infrastructure?

Answer 3: Vactoring may be used in place of hand digging where appropriate. Note that any equipment being used must maintain sufficient clearances to energized overhead 12kV and 60kV lines inside the substation.

Question 4: Can new drawings be issued with the coloring clarified for what's being added and deleted?

Answer 4: Please see the attached updated drawings. As mentioned during the job walk that on the drawings green represents demolition / removal and red represents additions / new construction per the project specification.

Bidders must include a signed copy of the addendum with their proposal.

I acknowledge receipt of Addendum #1

Name ROBERT RIEDEL

Signature

Company INTERSTATE CONSTRUCTION, INC Date JUNE 10, 2024

Question 2:

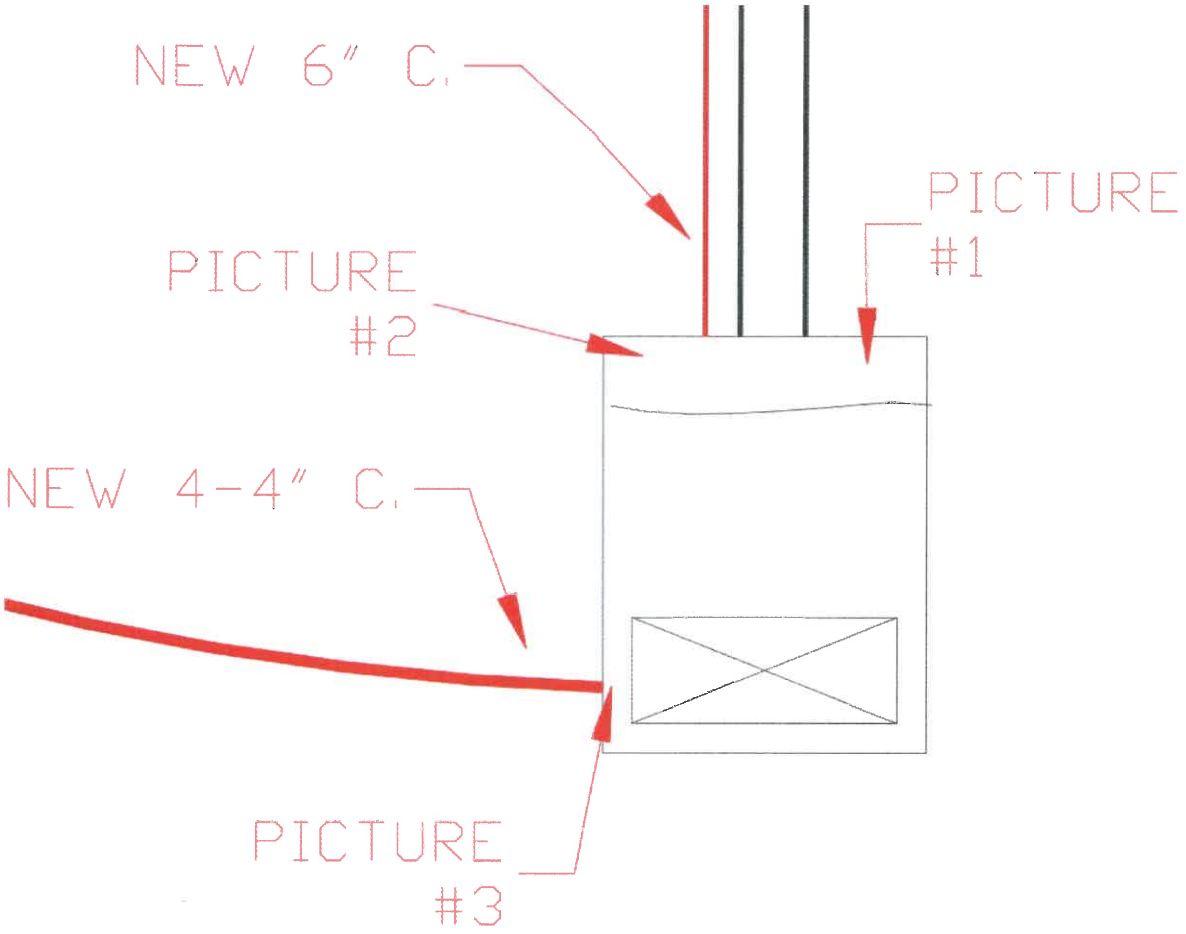

BICC BRAND 01-10 2001
000542 FEET

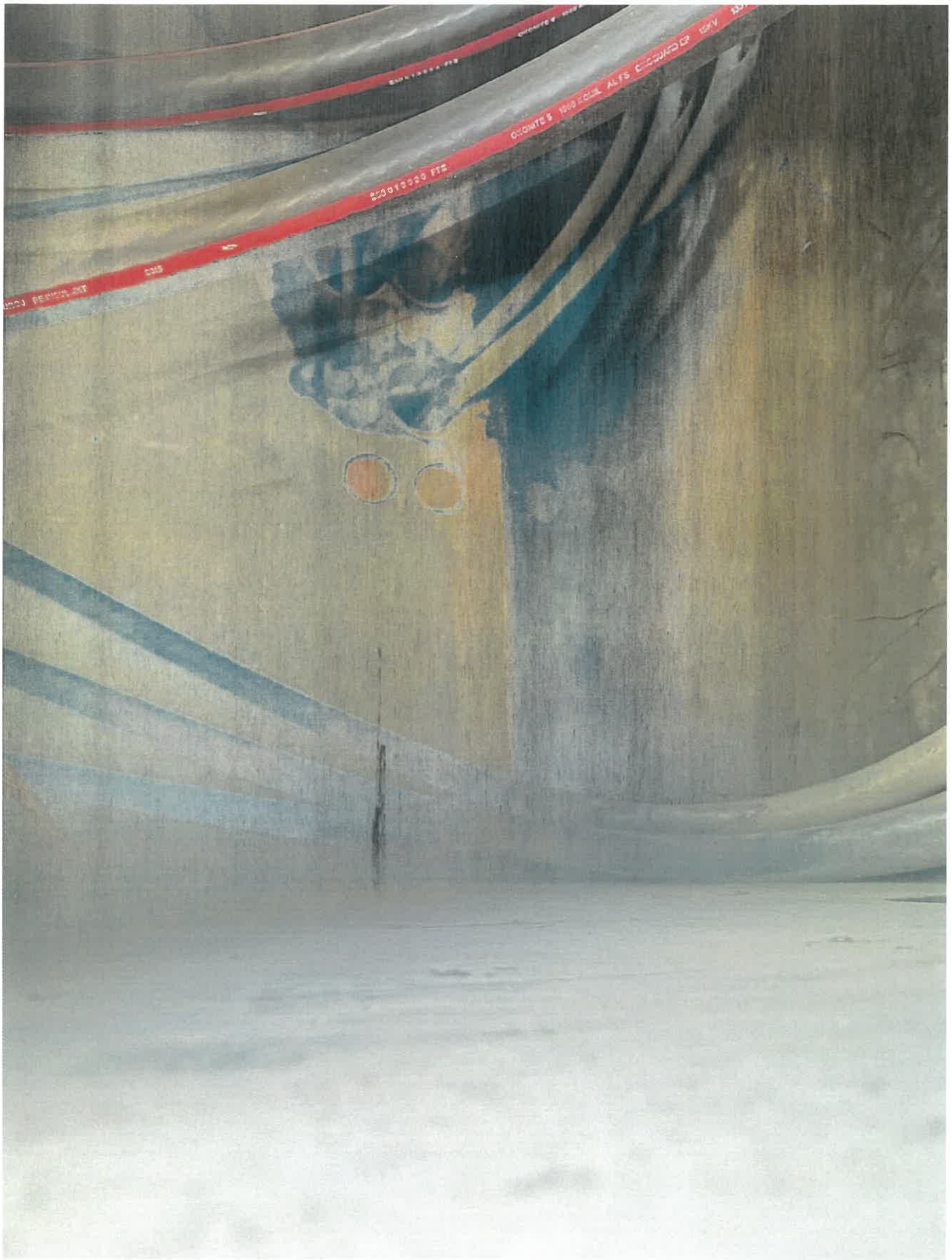

Pull box that will have 4-4" conduits intercept it from switchgear pad. Top of picture is East.

LEGEND

- 250MCM COPPER CONDUCTOR
- PIGTAIL 500MCM COPPER
- 5/8" X 8' GROUNDING ROD
- CADWELD JOINT
- EXISTING GROUND ROD 5/8" DIA. x 8' LONG
- FENCE GROUNDING (#2 COPPER CONDUCTOR)
- FENCE

NOTES:

1. NO GROUND CABLE SHALL BE IN CONTACT WITH REBAR.
2. IF DRILLING IS NECESSARY FOR PLACEMENT OF GROUND RODS, NATIVE SOIL BACKFILL COMPACTED AT 95% IS REQUIRED.
3. BONDING TAPE CONDUCTOR SHALL BE 2500 MCM COPPER.
4. PUTTY CONDUCTOR SHALL BE #2/0 AWG COPPER (EXACT PROVISION OF ALL DETAILS AT FOUNDATIONS TO BE LOCATED BY THE CITY ON SITE DURING CONSTRUCTION, SEE DWG NO. 35C1-29.)
5. FENCE GROUNDING SHALL BE #2 AWG COPPER WITH CONNECTION TO STATION GROUND AS SHOWN.
6. ALL BRAIDED END CONNECTIONS SHALL BE MADE BY CADWELD OR EQUIVALENT METHOD.
7. ALL CRIMPED END CONNECTIONS SHALL BE STAGGERED BY USE OF 3 DIES BEFORE TRENCHES ARE BACKFILLED.
8. CONNECTIONS TO PRIMARY NEUTRAL AND SECONDARY NEUTRAL SHALL BE MADE IN SEPARATE HANDHOLES FOR OWNERSHIP.
9. TERMINATION TO PRIMARY NEUTRAL SHALL BE MADE WITH ONE (1) #2 AWG CU WIRE WITH SEPARATION AT GROUND ROD AND CABWELD (TWO LOCATIONS).
10. TO PREVENT THEFT OF COPPER WIRE, TRENCHES AND EXCAVATIONS SHALL BE COVERED IMMEDIATELY AT THE COMPLETION OF THE CITY'S WORK.
11. SHOWED DWG 5 TO BE INSTALLED UNDER PRECAST TRENCHES

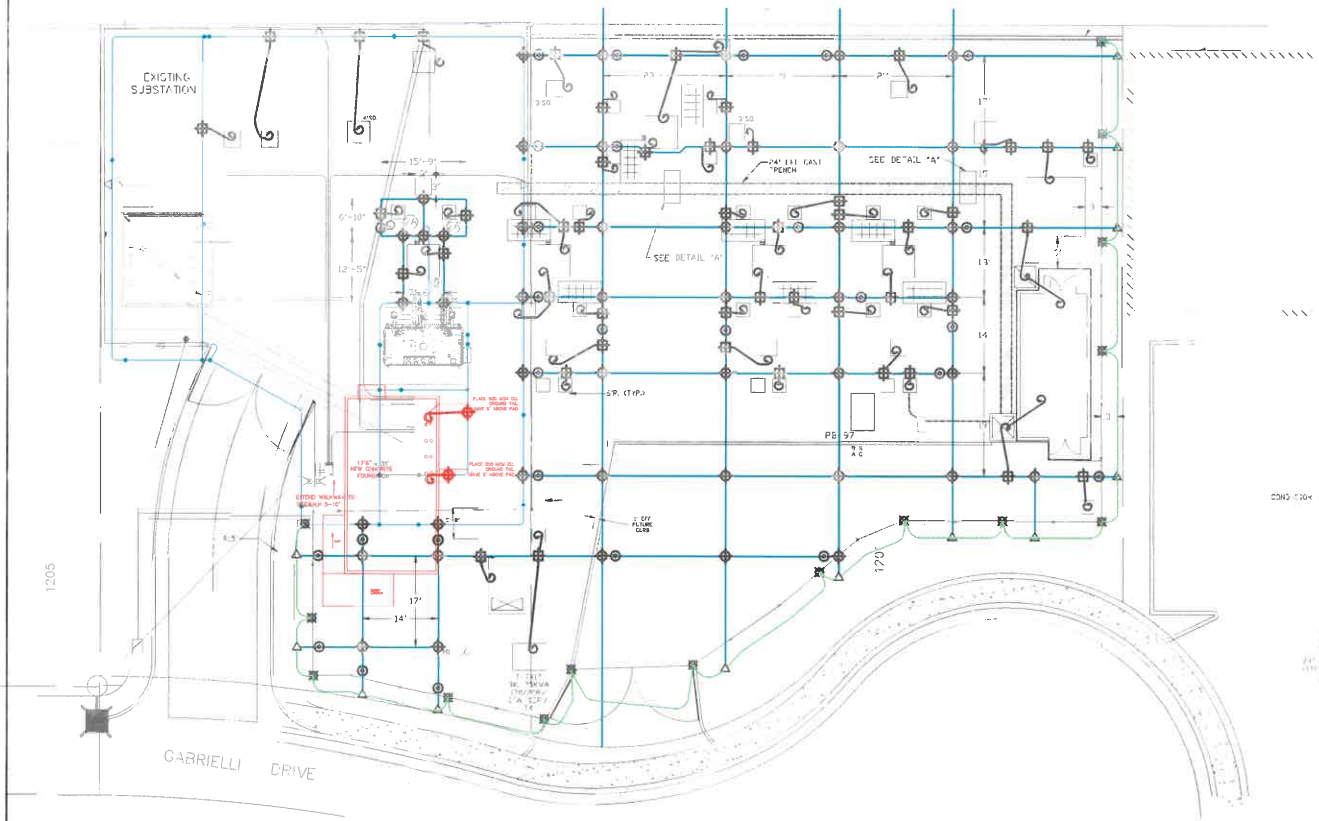

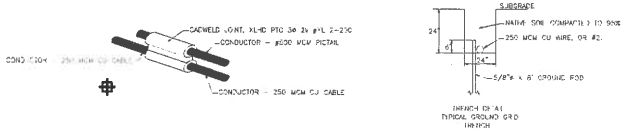

DETAIL "A"
DRAINAGE UNDER CONDUIT TRENCH
TYPICAL 3 PLACES

TYPICAL PIGTAIL OUTLET DETAIL

REV	BY	DATE	DESCRIPTION	TCC-1	APPR.
4A	AK	3/20/23	CIRBY SWITCHGEAR REPLACE		AK
4	MA	11/16/17	DWR-056 GNV. STEEL CONSTRUCTION - AS-BUILT	JB	JP
3	CP	1/27/11	DWR-056 GNV. STEEL CONSTRUCTION		JP
2	KM	11/14/05	AS BUILT	PE	JP
1	KM	7/11/03	RELEASED FOR CONSTRUCTION	PE	

Roseville Electric
Reliable Energy - Dependable Service
(916) 774-5601

TITLE
CIRBY SUBSTATION EXPANSION
GROUND GRID LAYOUT

ENG. P.TRAN | APPR.
DR. K.ANDREWS | DATE 2/10/03
SCALE 1" = 10'

JOB NO. 014004
ACCOUNT NO. 40001
DRAWING NO. 320C1-13

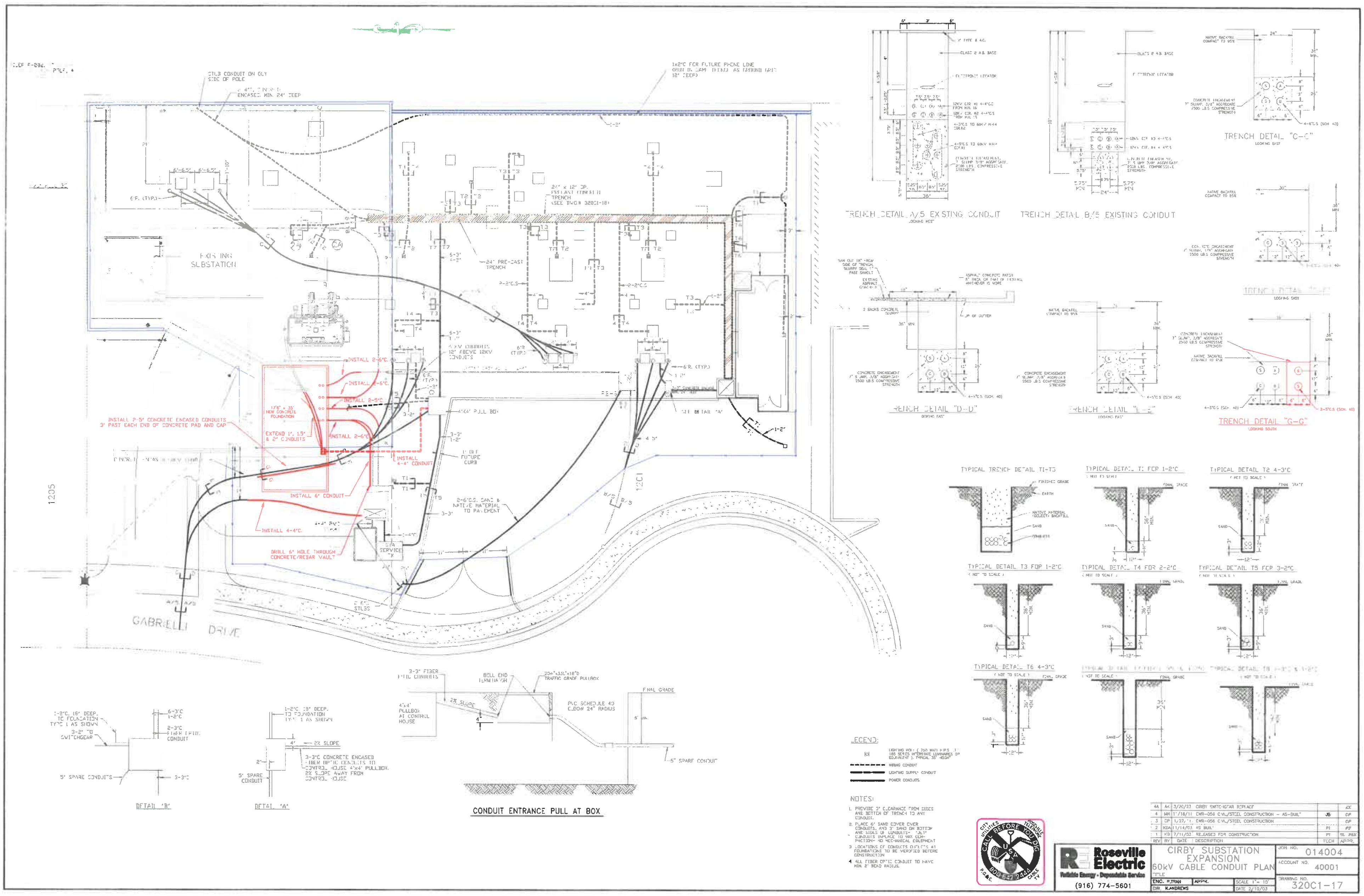
TRENCH DETAIL A/5 EXISTING CONDUIT
TRENCH DETAIL B/5 EXISTING CONDUIT
TRENCH DETAIL "C-C"
TRENCH DETAIL "D-D"
TRENCH DETAIL "G-G"
TYPICAL TRENCH DETAIL T1-T3
TYPICAL DETAIL T1 FOR 1-2"C
TYPICAL DETAIL T2 4-3"C
TYPICAL DETAIL T3 FOR 1-2"C
TYPICAL DETAIL T4 FOR 2-2"C
TYPICAL DETAIL T5 FOR 3-2"C
TYPICAL DETAIL T6 4-3"C
EXISTING SUBSTATION
GABRIELLI DRIVE
INSTALL 2-5" CONCRETE ENCASED CONDUITS 3' PAST EACH END OF CONCRETE PAD AND CAP
EXTEND 1", 1.5" & 2" CONDUITS
INSTALL 6" CONDUIT
INSTALL 4-4"C.
DRILL 6" HOLE THROUGH CONCRETE/REBAR VAULT
INSTALL 4-4" CONDUIT
24" PRE-CAST TRENCH
1x2"C FOR FUTURE PHONE LINE
CONDUIT ENTRANCE PULL AT BOX
DETAIL "A"
DETAIL "B"
LEGEND:
NOTES:
1. PROVIDE 3" CLEARANCE FROM SIDES AND BOTTOM OF TRENCH TO ANY CONDUIT.
2. PLACE 6" SAND COVER OVER CONDUITS, AND 3" SAND ON BOTTOM AND SIDES OF CONDUITS. "JET" CONDUITS INPLACE TO 90% COMPACTION. NO MECHANICAL EQUIPMENT
3. LOCATIONS OF CONDUITS OUTLETS AT FOUNDATIONS TO BE VERIFIED BEFORE CONSTRUCTION
4. ALL FIBER OPTIC CONDUIT TO HAVE MIN. 2' BEND RADIUS.
Roseville Electric
Reliable Energy • Dependable Service
(916) 774-5601
CIRBY SUBSTATION EXPANSION
60kV CABLE CONDUIT PLAN
JOB NO. 014004
ACCOUNT NO. 40001
DRAWING NO. 320C1-17
SCALE 1" = 10'
DATE 2/10/03
ENG. P.TRAN
DR. K.ANDREWS
4A AK 3/20/23 CIRBY SWITCHGEAR REPLACE
4 MN 1/18/11 EWR-056 CIVIL/STEEL CONSTRUCTION - AS-BUILT
3 OP 1/27/11 EWR-056 CIVIL/STEEL CONSTRUCTION
2 KDA 11/14/03 AS BUILT
1 KB 7/11/03 RELEASED FOR CONSTRUCTION
REV BY DATE DESCRIPTION
CALL BEFORE YOU DIG
1205

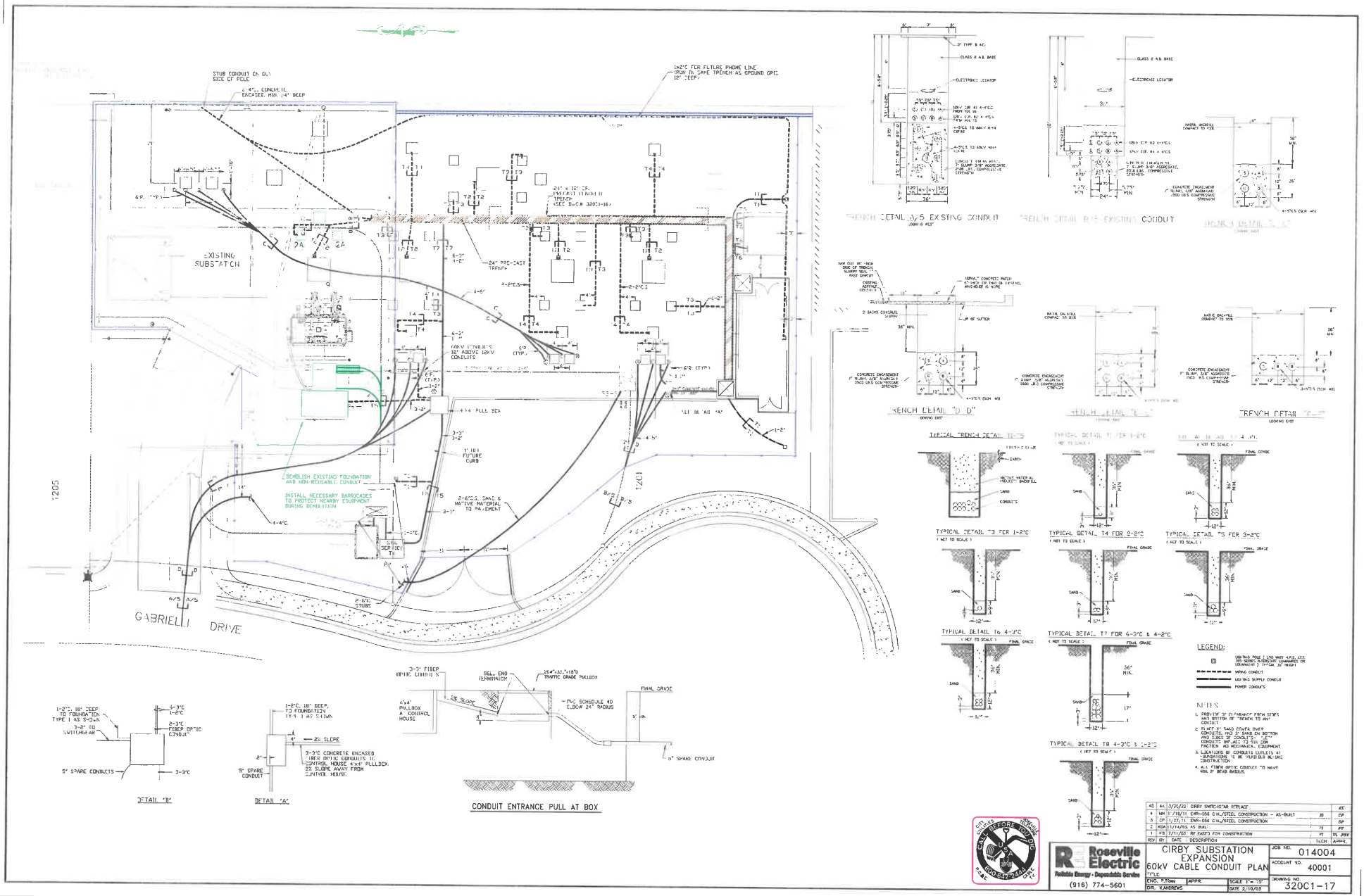
EXISTING SUBSTATION
GABRIELLI DRIVE
DEMOLISH EXISTING FOUNDATION AND NON-REUSABLE CONDUIT
INSTALL NECESSARY BARRICADES TO PROTECT NEARBY EQUIPMENT DURING DEMOLITION
DETAIL "B"
DETAIL "A"
CONDUIT ENTRANCE PULL AT BOX
TRENCH DETAIL A/5 EXISTING CONDUIT
TRENCH DETAIL B/5 EXISTING CONDUIT
TRENCH DETAIL "D-D"
TYPICAL DETAIL T3 FOR 1-2°C
TYPICAL DETAIL T4 FOR 2-2°C
TYPICAL DETAIL T5 FOR 3-2°C
TYPICAL DETAIL T6 4-3°C
TYPICAL DETAIL T7 FOR 6-3°C & 4-2°C
TYPICAL DETAIL T8 4-3°C & 1-2°C
LEGEND:
NOTES
CITY OF ROSEVILLE
CALL BEFORE YOU DIG
ROSEVILLE ENERGY PARK
ROSEVILLE ENERGY PARK
P.O.B.E.
CABLE TV
WATER
SEWER
GAS
TELEPHONE
TRAFFIC
FIBER OPTIC
CONDUIT
ROD 542-2444
Roseville Electric
Reliable Energy - Dependable Service
(916) 774-5601
CIRBY SUBSTATION EXPANSION
60kV CABLE CONDUIT PLAN
TITLE
ENG. P.TRAN
APPR.
DR. K.ANDREWS
SCALE 1"=10'
DATE 2/10/03
JOB NO. 014004
ACCOUNT NO. 40001
DRAWING NO. 320C1-17

Notice of Exemption

To: Placer County Clerk
Recorder's Office
2954 Richardson Drive
Auburn, CA 95603

From: City of Roseville
Development Services Dept.
311 Vernon Street
Roseville, CA 95678

Project Title: Cirby Substation 12kV Switchgear Replacement Project

Project Location(s): 1201 Gabrielli Drive (APNs 470-250-003-000 and 470-250-004-000), Roseville, CA 95661

Project Description: Roseville Electric is proposing to upgrade/replace the 12kV switchgear at Cirby Substation. A new switchgear building will be installed on a concrete foundation at the substation. Replacement of the switchgear allows for an improved design will include new technologies such as microprocessor relays, battery backup, and climate control. The project will increase the reliability to customers served by the Cirby 12kV Switchgear. The project site is located in an urbanized area entirely surrounded by commercial and residential development. There are no sensitive resources located in the vicinity.

Public Agency Approving Project: Roseville City Council

Agency/Individual Carrying Out Project: Roseville Electric

Reason why this Project is Exempt: This project qualifies for a Class 2 Exemption as described in Section 15302 of the California Environmental Quality Act (CEQA) guidelines which states:

> "Class 2 consists of the replacement or reconstruction of existing public or private structures, facilities, mechanical equipment, or topographical features, involving negligible or no expansion of use beyond that previously existing, including but not limited to: (b) existing facilities of both investor and publicly-owned utilities used to provide electric power. ... or other public utility services."

The proposed project involves replacement of components at an existing substation. No sensitive environmental resources would be disturbed. For this reason, the Class 2 exemption is applicable to the proposed project.

Lead Agency Contact Person: Austin Kurth, Electric Department Utility, 2090 Hilltop Circle, Roseville, CA 95747, (916) 784-3797.

Signature: Jessica Lynch Date: 04/08/2024

Jessica Lynch, Environmental Coordinator
City of Roseville

COUNCIL COMMUNICATION

CC #: 3492
File #: 0323

Title:	Virtual Interactive Simulator System - Sole Source Contract Purchase Agreement
Contact:	Mark Peinado 916-774-5021 mcpeinado@roseville.ca.us

Meeting Date: 8/21/2024
Item #: 7.5.

RECOMMENDATION TO COUNCIL

Staff recommends that the City Council adopt a resolution to approve a sole source contract purchase agreement to VirTra Inc. for the purchase and installation of a Virtual Interactive Simulator System, for a total amount of $182,014.51, and authorize the City Manager to execute it.

BACKGROUND

In January of 2023, the City adopted a resolution accepting a grant award from the Office of U.S. Department of Justice, Community Oriented Policing Services (COPS) in the amount of $150,000. The grant supports projects in police agencies across the country in their efforts to enhance training in de-escalation. It is the goal of the Roseville Police Department to create, enhance and sustain a comprehensive de-escalation training program by obtaining a Virtual Interactive Simulator System for use in force options, tactical communication, duty to intervene and de-escalation skills training.

The Roseville Police Department is requesting approval for a sole source contract purchase agreement to VirTra Inc., for purchase and installation of VirTra's Virtual Interactive Simulator System. VirTra Inc. is the sole manufacturer of their proprietary interactive simulation system and software that allows for the creation of unique training content that can only be used on the VirTra line of simulation equipment. Virtra Inc. holds U.S. patents for their firearm simulation equipment that convert a live firearm into a safe and reliable training tool that can simulate the action and mechanical malfunction of a firearm to increase realism of the simulation training. The use of VirTra's proprietary simulation system, equipment, and software will allow the Police Department to produce an immersive training experience for use of force and de-escalation trainings.

FISCAL IMPACT

The total cost for the Virtual Interactive Simulator System will be $182,014.51. Funding for this purchase has been established in the Law Enforcement Agency De-Escalation Grant Project. The grant award will cover $150,000 of this purchase. The remaining amount of $32,014.51 will be paid with funding from the Supplemental Law Enforcement Fund.

ENVIRONMENTAL REVIEW

The California Environmental Quality Act (CEQA) does not apply to activities that will not result in a direct or reasonably foreseeable indirect physical change in the environment, or is otherwise not considered a project as defined by CEQA Statute §21065 and CEQA State Guidelines §15060(c)(3) and §15378. The purchase and installation of a virtual interactive simulator system meets the above criteria and is not subject to CEQA. No additional environmental review is required.

CITY COUNCIL STRATEGIC PLAN/OVERARCHING GOALS

Goal C - Maintain a safe and healthy community

Respectfully Submitted,

Mark Peinado, Management Analyst

Troy Bergstrom, Police Chief

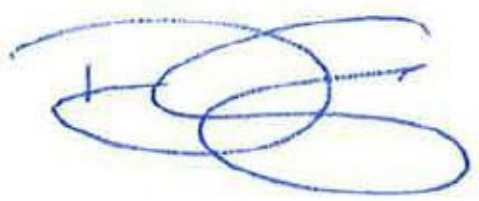

_____

Dominick Casey, City Manager

ATTACHMENTS:

Description

Resolution 24-292

CPA #3003604 for Virtra Installation

Virtra Equipment Quote

RESOLUTION NO. 24-292

APPROVING A SOLE SOURCE CONTRACT PURCHASE AGREEMENT, BY AND BETWEEN THE CITY OF ROSEVILLE AND VIRTRA, INC., AND AUTHORIZING THE CITY MANAGER TO EXECUTE IT ON BEHALF OF THE CITY OF ROSEVILLE

WHEREAS, a sole source contract purchase agreement (3003604) for the installation and training for a Virtual Interactive Simulator System, by and between the City of Roseville and VirTra, Inc., has been reviewed by the Council; and

NOW, THEREFORE, BE IT RESOLVED by the Council of the City of Roseville that said contract purchase agreement is approved and that the City Manager is authorized to execute it on behalf of the City of Roseville.

PASSED AND ADOPTED by the Council of the City of Roseville this____day of _____, 2024, by the following vote on roll call:

AYES COUNCILMEMBERS:

NOES COUNCILMEMBERS:

ABSENT COUNCILMEMBERS:

_____
MAYOR

ATTEST:

_____
City Clerk

Docusign Envelope ID: 890A8E04-53D5-4574-A1D4-89019B925A3E

Contract Purchase Agreement 3003604

Supplier Details:

Company	VirTra Inc
Contact	Ryan Bray
Address	295 E Corporate Pl
	Chandler, Arizona 85225

Submit your response to:

Company	City of Roseville
Contact	Erica Kaminski
Address	Purchasing Division
	311 Vernon St
	Roseville, CA 95678
Phone	(916) 746-1108
Fax	(916) 746-1115
E-mail	enkaminski@roseville.ca.us

This Contract Purchase Agreement is sent for your review and acceptance. Notify the Buyer via email of any needed changes to the company name, address, and contact information. The Buyer will update the agreement prior to you signing the document.

Return signed copies of the agreement to the Buyer noted on the agreement. Alterations or modifications to the agreement are not allowed. Upon receipt of all necessary documents, the City will sign the agreement and return a fully executed copy to you. Receipt of the signed copy will be your notice to proceed with the work in accordance with the terms and conditions of the agreement. Work must not begin until the contract has been fully executed.

The following guidelines must be followed for the signature block on the agreement:

Sole proprietorship - **By owner**

Partnership - **Any general partner**

Corporation - **Two options:**
(1) A signature from the President and the corporate seal; **OR**
(2) One signature from the Chairman of the Board, President, or any Vice President **AND** one signature from the Secretary, any Assistant Secretary, Chief Financial Officer, or any Treasurer or Assistant Treasurer of the corporation

*General Manager, Office Manager and/or Sales Manager are **not** corporate officer titles. The agreement will be rejected if not signed in accordance with these guidelines.

Insurance requirements:
The City's insurance requirements are referenced on Attachment A of the agreement. By signing the agreement, you are confirming that your company has the minimum insurance limits required.

Docusign Envelope ID: 890A8E04-53D5-4574-A1D4-89019B925A3E

Contract Purchase Agreement 3003604

Agreement	**3003604**
Agreement Date	**19-JUL-2024**
Change Order	**1**
Change Order Date	**23-JUL-2024**
Revision	**1**
Agreement Amount	**7,240.86 USD**

Invoice To
City of Roseville
Accounts Payable
311 Vernon St
ROSEVILLE CA 95678
Phone: (916) 774-5488
Fax: (916) 784-3796
Email: accountspayable@roseville.ca.us

Supplier
VirTra Inc
295 E Corporate Pl
Chandler, Arizona 85225
Phone: ()
Fax: ()
Email: rbray@virtra.com

Description of Labor, equipment and/or materials

Vendor shall provide installation and training for one (1) V-180 Simulator System in accordance with the attached VirTra, Inc. quote #00009167 dated 7/23/24 utilizing the City of Roseville negotiated terms and conditions for VirTra, Inc. dated 7/19/24. The attached VirTra drawings dated 3/5/24 shall also be incorporated by reference onto this agreement.

Start Date: Executed Agreement
End Date: Upon Final Payment

Please contact Mark Peinado in the Police Department at (916) 774-5021 or mcpeinado@roseville.ca.us for any questions regarding this agreement.

Customer #	Supplier #	Payment Terms	Freight Terms	FOB	Shipping Method
	16020	**Net 30**	**Freight on Board at the destination**	**Destination**	**Best Method**

Start Date	End Date	Confirm To
		Erica Kaminski Phone **1-916-746-1108**

Attention: Total Cost not to exceed the agreement amount without prior approval of the Purchasing office.

Docusign Envelope ID: 890A8E04-53D5-4574-A1D4-89019B925A3E

Contract Terms and Conditions

1. The parties hereby incorporate by reference Seller's "Sales Terms and Conditions for Direct Sales to End Users/Buyer" provided with the Seller's Quote Number: 00009167. In the event of a conflict in terms, this "PURCHASE ORDER TERMS AND CONDITIONS" as amended herein shall prevail.

2. Contractor is an independent contractor, and shall not be considered an officer, agent or employee of the City.

3. Without the written consent of the City, this Agreement is not assignable by Contractor either in whole or in part.

4. This section is intentionally left blank.

5. This section is intentionally left blank.

6. This Agreement may only be amended or modified in writing. It is integrated and contains the complete understanding of the parties.

7. All equipment, supplies and services sold to the City of Roseville shall conform to the general safety orders of the State of California.

8. Unless notified to the contrary, in writing, the City assumes that the Contractor has accepted the work in accordance with the plans and specifications (if any) and agrees to do the work in compliance with this Agreement.

9. This section is intentionally left blank.

10. Contractor agrees to the below insurance requirements:

    a. Unless otherwise specified, the Contractor shall maintain the policies of insurance outlined in Attachment A, incorporated herein by this reference, in full force and effect during the term of this Agreement. The City of Roseville retains sole discretion in determining the types and proper levels of insurance coverage.

    b. Form. Contractor shall submit a certificate evidencing such coverage for the period covered by this Agreement in a form satisfactory to Risk Management and the City Attorney, prior to undertaking any work hereunder. Any insurance written on a claims made basis is subject to the approval of Risk Management and the City Attorney.

    c. Additional Insureds. Contractor shall also provide a separate endorsement or section of the policy showing City, its officers, agents, employees, and volunteers as additional insureds for each type of coverage, except for Workers' Compensation. Such insurance shall specifically cover the contractual liability of Contractor. The additional insured coverage under the Contractor's policy shall be primary and noncontributory, as evidenced by a separate endorsement or section of the policy, and shall not seek contribution from City's insurance or self-insurance. In addition, the additional insured coverage shall be at least as broad as the Insurance Services Office (ISO) CG 20 01 Endorsement. Any available insurance proceeds in excess of the specified minimum insurance coverage requirements and limits shall be available to the additional insureds. Furthermore, the requirements for coverage and limits shall be:

Docusign Envelope ID: 890A8E04-53D5-4574-A1D4-89019B925A3E

(1) the minimum coverage and limits specified in this Agreement; or
(2) the full coverage and maximum limits of any insurance proceeds available to the named insureds, whichever is greater.

d. Cancellation/Modification. Contractor shall provide thirty (30) days written notice to City prior to cancellation or modification of any insurance required by this Agreement.

e. Umbrella/Excess Insurance. The limits of insurance required in this Agreement may be satisfied by a combination of primary and excess insurance. Any excess insurance shall contain or be endorsed to contain a provision that such coverage shall also apply on a primary and noncontributory basis for the benefit of City (if agreed to in a written contract) before City's own insurance shall be called upon to protect it as a named insured.

f. Subcontractors. Contractor agrees to include in its contracts with all subcontractors the same requirements and provisions of this Agreement, including the indemnity and insurance requirements, to the extent they apply to the scope of the subcontractor's work. Furthermore, Contractor shall require its subcontractors to agree to be bound to Contractor and City in the same manner and to the same extent as Contractor is bound to City under this Agreement. Additionally, Contractor shall obligate its subcontractors to comply with these same provisions with respect to any tertiary subcontractor, regardless of tier. A copy of City's indemnity and insurance provisions will be furnished to the subcontractor or tertiary subcontractor upon request.

g. Self-Insured Retentions. All self-insured retentions (SIR) must be disclosed to Risk Management for approval and shall not reduce the limits of liability. Policies containing any SIR provision shall provide or be endorsed to provide that the SIR may be satisfied by either the named insured or City. City reserves the right to obtain a full certified copy of any insurance policy and endorsements. The failure to exercise this right shall not constitute a waiver of such right.

h. Waiver of Subrogation. Contractor hereby agrees to waive subrogation which any insurer of Contractor may acquire from Contractor by virtue of the payment of any loss under a Workers Compensation, Commercial General Liability or Automobile Liability policy. All Workers Compensation, Commercial General Liability and Automobile Liability policies shall be endorsed with a waiver of subrogation in favor of City, its officers, agents, employees and volunteers for all work performed by Contractor, its employees, agents and subcontractors.

i. Liability/Remedies. Insurance coverage in the minimum amounts set forth herein shall not be construed to relieve Contractor of liability in excess of such coverage, nor shall it preclude City from taking such other actions as are available to it under any other provisions of this Agreement or law.

11. Contractor shall comply with all applicable federal, state, and local laws and ordinances, including but not limited to the City's storm water regulations, as may be applicable to the performance of services under this Agreement. Failure to comply with local ordinances may result in monetary fines and cancellation of this Agreement. Refer to www.roseville.ca.us/stormwater for links to more information on the City's storm water regulations.

12. In the event that the terms of any attachment or exhibit conflict with any terms of this Agreement, the terms of this Agreement shall control.

13. This Agreement may be executed in one or more counterparts, each of which shall be deemed an original, but all of which together shall constitute one and the same

Docusign Envelope ID: 890A8E04-53D5-4574-A1D4-89019B925A3E

instrument. In the event that any signature is delivered by facsimile transmission or by e-mail delivery of a ".pdf" format data file, such signature shall create a valid and binding obligation of the party executing (or on whose behalf such signature is executed) with the same force and effect as if such facsimile or ".pdf" signature page were an original hereof.

14. If either party commences any legal action against the other party arising out of this Agreement or the performance thereof, the prevailing party in such action shall be entitled to recover its reasonable litigation expenses, including but not limited to, court costs, expert witness fees, discovery expenses, and attorneys' fees. Any action arising out of this Agreement shall be brought in Placer County, California, regardless of where else venue may lie. This Agreement shall be governed by and construed in accordance with the laws of the State of California.

15. This Agreement shall be binding upon the heirs, successors, executors, administrators and assigns of the respective parties hereto.

16. If any of the provisions contained in this Agreement are for any reason held invalid or unenforceable, such holding shall not affect the remaining provisions or the validity and enforceability of the Agreement as a whole.

17. For purposes of this Agreement, the terms "Contractor," "Consultant," and "Supplier" are used interchangeably.

18. If the project referenced on this agreement is a Public Works project, then the following shall apply: No contractor or subcontractor may work on a public works project unless registered with the Department of Industrial Relations pursuant to Labor Code section 1725.5. During the performance of this agreement, Contractor and its subcontractors shall have a continuing legal obligation to maintain current registration with the Department of Industrial Relations. Contractor is hereby notified that this project is subject to compliance monitoring and enforcement by the Department of Industrial Relations.

19. Vehicles with a gross vehicle weight rating (GVWR) greater than 8,500 lbs. and light-duty package delivery vehicles operated in California may be subject to the California Air Resources Board (CARB) Advanced Clean Fleets regulations. Such vehicles may therefore be subject to requirements to reduce emissions and air pollutants. For more information, visit the CARB Advanced Clean Fleet webpage at https://ww2.arb.ca.gov/our-work/programs/advanced-clean-fleets.

20. Contractor/consultant's duties and services under this agreement shall not include preparing or assisting the public entity with any portion of the public entity's preparation of a request for proposals, request for qualifications, or any other solicitation regarding a subsequent or additional contract with the public entity. The public entity entering this agreement shall at all times retain responsibility for public contracting, including with respect to any subsequent phase of this project. Contractor/consultant's participation in the planning, discussions, or drawing of project plans or specifications, if any, shall be limited to conceptual, preliminary, or initial plans or specifications. Contractor/consultant shall cooperate with the public entity to ensure that all bidders for a subsequent contract on any subsequent phase of this project have access to the same information, including all conceptual, preliminary, or initial plans or specifications prepared by contractor pursuant to this agreement.

21. This section is intentionally left blank.

22. Contractor certifies that Contractor, its employees, directors, officers, agents, subcontractors, vendors, and volunteers are not presently debarred, excluded, suspended, declared ineligible, voluntarily excluded, or proposed for debarment, exclusion, suspension, or ineligibility by any federal, state, or local department or agency.

Docusign Envelope ID: 890A8E04-53D5-4574-A1D4-89019B925A3E

23. The Levine Act (Govt. Code, Section 84308) requires a Party (and its agent(s), if any) to a Proceeding before the City of Roseville that involves any action or consideration related to their contract, license, permit, or other entitlement for use, to disclose any campaign contributions made to City elected or appointed officers totaling more than $250 within the twelve (12) months prior to the City decision and while a proceeding is pending, and includes certain prohibitions on contribution activity thereafter. If applicable campaign contributions have been made by Contractor and/or its agent(s), Contractor is responsible for compliance, including for its disclosure obligations, if any, as further described at: https://www.roseville.ca.us/government/departments/city_clerk/transparency/levine_act.

24. This Agreement may be amended via change order, but only if such change order is made in writing, approved by the City, and signed by both parties.

25. CONTRACTOR and CITY agree that: (a) CONTRACTOR is free from the control and direction of CITY in connection with the performance of the work; (b) CONTRACTOR is providing services directly to CITY; (c) CONTRACTOR has and will maintain at all relevant times a business license; (d) CONTRACTOR maintains a business location that is separate from CITY; (e) CONTRACTOR is customarily engaged in an independently established business of the same nature as that involved in the work performed hereunder; (f) CONTRACTOR actually contracts with other businesses to provide the same or similar services and maintains a clientele without restrictions from CITY; (g) CONTRACTOR advertises and holds itself out to the public as available to provide the same or similar services; (h) CONTRACTOR provides its own tools, vehicles, and equipment to perform the services; (i) CONTRACTOR has negotiated its own rates; (j) CONTRACTOR set its own hours and location of work in accomplishing CITY's on-call needs; and (k) CONTRACTOR has the right to control the manner and means of accomplishing the result desired and exercises its own expert independent judgement.

The supplier named hereon by the acceptance of this order agrees to the provisions of this document titled "Contract Purchase Agreement" and all accompanying terms, conditions, and attachments.

Roseville Business License No. _____

Contractor License No. N/A

DIR Registration No. N/A

Check mark the applicable company type below:

___**X**_____ **Corporation**

_____ **Limited Liability Company**

_____ **Partnership**

_____ **Sole Proprietor**

City Reserves the right to withhold any payments to contractor in the event of noncompliance with insurance requirements or if required by law.
General T&C
REV 7/19/24 TC (Negotiated T's & C's for VirTra, Inc.)

Docusign Envelope ID: 890A8E04-53D5-4574-A1D4-89019B925A3E

ATTACHMENT A
HUMAN RESOURCES/RISK MANAGEMENT DIVISION
INSURANCE REQUIREMENTS
AGREEMENT OVER FORMAL BID LIMIT OR INVOLVING HIGH RISK ACTIVITIES
Negotiated for VirTra, Inc., revised 7/19/24 VB

General - Required Coverage/Documentation

- General Liability: $1 Million per occurrence /$2 Million aggregate
- Automobile Liability: $1 Million combined single limit
- Workers' Compensation: Statutory *Must provide a Waiver of subrogation
- Additional Insured Endorsement (AIE) - General Liability policy: CG 20 38 04 13 or an equivalent, blanket endorsement or section of the policy. Endorsement shall cover the City of Roseville, its officers, agents, employees and volunteers as additional insured.
- Policies must be primary and non-contributory
- A 30 day notice of cancellation must be provided
- List certificate holder as: The City of Roseville - Insurance Compliance, PO Box 100085-R1, Duluth, GA 30096

Additional Liability/Insurance Requirements if required by Agreement (and marked below):

Construction:____
General Liability:
$2 Million/occurrence
$4 Million aggregate

Design Professional:____
General Liability:
$2 Million/occurrence
$4 Million aggregate
Professional Liability:
$2 Million/occurrence

Professional Consultant:____
Professional Liability:
$1 Million/occurrence

IT Services:_X___
Professional Liability:
$1 Million/occurrence
No auto required

Hazardous Materials:____
Pollution Liability:
$1 Million/occurrence

Special Events/Caterers-Vendors:____
No auto required
No workers' comp required

Professional Counseling/ Psychological:____
Professional Liability:
$1 Million/occurrence
No auto required

Docusign Envelope ID: 890A8E04-53D5-4574-A1D4-89019B925A3E

Pyrotechnics:____
General Liability:
$5 Million/occurrence
$10 Million aggregate
Auto - $2 Million/occurrence

Chemical/Environmental:____
General Liability:
$3 Million/occurrence
$6 Million aggregate
Pollution – $2 Million/Occurrence
Auto - $2 Million/Occurrence

Insurance Submission Process

The City of Roseville Human Resources/Risk Management Department uses a service called EBIX to manage our insurance certificate tracking.

How It Works

- The vendor's contact information is entered into EBIX. EBIX will contact the vendor to request proof of insurance.
- The Vendor can forward the request to their Insurance Agent(s) if necessary.
- Vendor/Insurance Agent submits insurance to EBIX by email to roseville@ebix.com or by fax to (770) 325-5727. After faxing or emailing the certificate, please DO NOT send the certificate by mail to EBIX. Please do not mail, email or fax any certificates to the City of Roseville.
- Once submitted, EBIX reviews the insurance documentation. If there are deficiencies, EBIX will send a follow up letter or email requesting additional information.

Questions Regarding Insurance Submission: Contact EBIX at (951) 652-4239
Questions Regarding Insurance Requirements Contact Risk Management at (916) 774-5202

Docusign Envelope ID: 890A8E04-53D5-4574-A1D4-89019B925A3E

CALIFORNIA AIR RESOURCES BOARD REGULATION COMPLIANCE

Please indicate whether the Contractor is subject to, and/or in compliance with, the following regulations of the California Air Resources Board.

In-Use Off-Road Diesel-Fueled Fleets Regulation

1) Will vehicles subject to Cal. Code Regs., tit. 13, §§ 2449 et seq. be used for the project? This includes, but is not limited to:
   a) Vehicles with a diesel-fueled or alternative diesel fueled off-road compression-ignition engine with maximum power (max hp) of 25 horsepower (hp) or greater provided that the vehicle cannot be registered and driven safely on-road or was not designed to be driven on-road, even if it has been modified so that it can be driven safely on-road
   b) Workover rigs
   c) Certain two-engine vehicles

   Yes ____ No X

2) If you answered "Yes" to 1), you **must** submit a valid Certificate of Reported Compliance to the City as provided in Cal. Code Regs., tit. 13, § 2449(n).

Advanced Clean Fleets Regulation

Pursuant to Cal. Code Regs., tit. 13, § 2013(i)(1), the Contractor shall submit to the City a document evidencing that it is listed on the CARB Advanced Clean Fleets webpage as a compliant fleet **OR** a signed statement stating that it is not subject to the High Priority and Federal Fleets regulation of title 13, CCR section 2015 through 2015.6.

The High Priority Fleets regulation applies to, without limitation, entities with more than $50 million in gross annual revenues and/or which own, operate, or direct the operation of 50 or more vehicles in the total fleet.

1) Is the Contractor subject to the High Priority and Federal Fleets regulation of title 13, CCR section 2015 through 2015.6?

   Yes ____ No X

2) If you answered "Yes" to 1), you **must** submit a document evidencing that you are listed on the CARB Advanced Clean Fleets webpage as a compliant fleet.

Signature: DocuSigned by: _____
87DC48869BFC44C...

Title: CEO

CARB Compliance
Rev 2/15/24 MC

Docusign Envelope ID: 890A8E04-53D5-4574-A1D4-89019B925A3E

Supplier

Signature: DocuSigned by: 87DC48869BFC44C...

Print Name: John GIvens

Title: CEO

Date: 7/29/2024

Supplier

Signature: DocuSigned by: 25834108C6F14AE...

Print Name: Alanna Boudreau

Title: CFO

Date: 7/29/2024

City of Roseville, A Municipal Corporation

Signature: _____

Print Name: **Dominick Casey**

Title: **City Manager**

Date: _____

Docusign Envelope ID: 890A8E04-53D5-4574-A1D4-89019B925A3E

DocuSign Envelope ID: 4749B558-6FCA-43A5-91D4-B595639FE9FA

CITY OF ROSEVILLE CALIFORNIA

April, 2022

RE: Contractor and Grantee Compliance with Economic Sanctions Imposed in Response to Russia's Actions in Ukraine

Dear Vendor:

On March 4, 2022, Governor Gavin Newsom issued Executive Order N-6-22 (EO) regarding sanctions in response to Russian aggression in Ukraine. The EO is located at https://www.gov.ca.gov/wp-content/uploads/2022/03/3.4.22-Russia-Ukraine-Executive-Order.pdf.

The EO directs all agencies and departments that are subject to the Governor's authority to take certain immediate steps, including notifying all contractors and grantees of their obligations to comply with existing economic sanctions imposed by the U.S. government in response to Russia's actions in Ukraine, as well as any sanctions imposed under state law.

This correspondence serves as a notice under the EO that as a contractor or grantee, compliance with the economic sanctions imposed in response to Russia's actions in Ukraine is required, including with respect to, but not limited to, the federal executive orders identified in the EO and the sanctions identified on the U.S. Department of the Treasury website (https://home.treasury.gov/policy-issues/financial-sanctions/sanctions-programs-and-country-information/ukraine-russia-related-sanctions). Failure to comply may result in the termination of contracts or grants, as applicable.

Please note that for any agreements or grants valued at $5 million or more you must report to the City of Roseville your compliance with economic sanctions including steps you have taken in response to Russia's actions in Ukraine, including, but not limited to, desisting from making new investments in, or engaging in financial transactions with, Russian entities, not transferring technology to Russia or Russian entities, and directly providing support to the government and people of Ukraine.

Sincerely,

DocuSigned by:
Shannon Wiest
A3035660A19747F...

4/25/2022

Shannon Wiest
City of Roseville
Purchasing and Warehouse Manager

Docusign Envelope ID: 890A8E04-53D5-4574-A1D4-89019B925A3E

VirTra

295 E. Corporate Pl, Chandler, AZ 85225 USA | TOLL FREE: 800.455.8746 PH: 480.968.1488 FAX: 480.968.1448 | WWW.VIRTRA.COM

Account Name	Roseville Police Department	CustID	0623-07086
Contact Name	Scott Miszkewycz	Created Date	7/23/2024
Phone	(916) 774-5000	Quote Number	00009167
Email	smiszkewycz@roseville.ca.us	Expiration Date	8/31/2024
Ship To Name	Roseville Police Department	Prepared By	Ryan Bray
		Phone	(480) 968-1488
		Extension	5012
		Email	rbray@virtra.com

Product	Product SKU	Product Code	Product Description	Sales Price	Quantity	Total Price
VirTra 180 Installation/Training	8000180	V-180-INSTL	VirTra Installation and Training for one (1) V-180 System. Includes all travel and expenses in the CONUS.	$7,240.86	1.00	$7,240.86

Total Price	$7,240.86
S&H	$0.00
Grand Total	$7,240.86

Sales Terms and Conditions for Direct Sales to End Users/Buyer

1. Precedence. This Sales Terms and Conditions for Direct Sales to End Users/Buyers "Agreement" applies to Buyer's purchase of Goods and Services, as defined below, when purchased directly from VirTra "Seller". Any purchase of Goods and Services sold by Seller is expressly subject to and conditioned upon the terms and conditions set forth herein. By accepting delivery of the Goods and Services, Buyer accepts and is bound by this Agreement. Any different or conflicting additional terms set forth by, whether in Buyer's purchase order or another communication, are expressly rejected and will not be binding on Seller unless agreed to in writing by an authorized officer of Seller. Now therefore, for good and valuable consideration the receipt and sufficiency of which is hereby acknowledged by the parties, the parties agree as follows.

2. Definitions: The following capitalized words shall mean: "End Users/Buyer" means the organization or person who buys Seller's Goods and Services. "Goods and Services" means without limitation, the articles, products, accessories, and services to be supplied to Buyer by Seller. "Technology and Intellectual Property Rights" means all patents, registered and unregistered designs, copyright, trademarks, know-how, software, firmware, hardware, systems, components, or assemblies. "Seller" means VirTra, Inc., located at 295 E. Corporate Place, Chandler, AZ 85225, USA.

3. All Sales Final. All sales are final, and no returns, refunds or exchanges of the Goods and Services are allowed, except as provided by state or federal law, and, to the returns, refunds or exchanges are required by law, must be preapproved by Seller's Return Merchandise Authorization (RMA) form.

4. Restocking Fees. In Seller's sole discretion, all returns, refunds, or exchanges may be charged a restocking fee of up to 15% of the purchase price paid, plus any applicable shipping and sales tax, unless the returned product is defective, or the return is a direct result of Seller's error.

5. Payment Terms. Terms of payment are within Seller's sole discretion and, unless otherwise agreed to by Seller in writing, 50% deposit payment must be received prior to Seller's acceptance of an order with the remaining 50% balance due upon shipping. Payment for Goods and Services will be made in United States currency ($US Dollar) by a preapproved payment method. Credit card payment terms must be preapproved by Seller's Finance Department and if approved, invoices are due and payable within the time period noted on invoices, measured from the date of the invoice. An additional 3% fee will be charged to cover processing costs. Seller may at its sole discretion invoice parts of an order separately. No discounts shall be given for early payments.

6. Suspension or Cancelation: Seller may suspend or cancel Buyer's order for any failure by Buyer to comply with agreed upon payment terms. Seller is not responsible for pricing, typographical, or other errors in any offer by Seller and reserves the right to cancel any orders resulting from such errors.

7. Late Payments. Interest and late payment fees may be calculated from the day after the payment's stated due date through

Docusign Envelope ID: 890A8E04-53D5-4574-A1D4-89019B925A3E

the date payment is received in full, at the maximum legal allowable interest rate in effect on the applicable dates.

8. Taxes. Sales tax, end user tax, pass-through tax, value-added tax (VAT), transaction privilege tax, consumption tax, customs tax and/or duties are the sole responsibility of Buyer, and Buyer agrees to reimburse Seller for all applicable taxes that Seller is required to collect, regardless of the tax amount being excluded from Seller's quotes or Buyer's Purchase Orders.

9. **Tax Exemption**. If Buyer requests tax exempt status, then Buyer must provide Seller with a correct, valid, and signed tax exemption certificate applicable to the specific Goods and Services purchased, relevant to the end use location, prior to Seller invoicing. If an invalid tax exemption certificate is received or no tax exemption certificate is received, it will be the responsibility of Buyer to pay all required taxes. Additionally, it will be Buyer's responsibility to obtain any tax refunds permitted if Seller has collected and remitted taxes to a taxing authority.

10. Shipping, Title, Risk of Loss. Shipping and handling costs will be added to all invoices unless otherwise expressly indicated and agreed to in writing at the time of sale. Seller reserves the right to make partial shipments unless specifically stated otherwise on Buyer's signed Pro Forma Invoice or purchase order and such shipping terms are pre-approved by Seller in writing. Products may ship from multiple locations following the rules of the International Commercial Terms (Incoterms) as published by the International Chamber of Commerce (ICC). Title and risk of loss passes from Seller to Buyer FOB Origin domestic or Free Carrier (FCA) international upon Seller's delivery to the named place of delivery, cleared for export, as mutually agreed by both buyer and seller. Once seller is deemed to have delivered goods to the named place of delivery, the buyer is responsible for both unloading the goods and loading them onto their own carrier. Seller shall invoice upon shipping. Any loss or damage that occurs after seller's delivery is Buyer's responsibility. Buyer must promptly file claims for damaged items with the freight carrier. Shipping dates are estimates only.

11. Excusable Delays. Seller will use commercially reasonable efforts to deliver all products ordered as agreed or as soon as reasonably practicable. In the event of interruption of any delivery due to causes beyond the reasonable control of Seller, including but not limited to force majeure, fire, labor disturbances, riots, accidents, or inability to obtain necessary materials or components, Seller has the right, in its sole discretion and upon oral or written notice to Buyer, to delay or terminate the delivery.

12. Not for Resale or Export. Buyer represents and warrants that they are buying Seller's products for the specified end user, and Buyer will not resale or export Seller's products to a country other than the country listed as the Buyer's shipping destination. The shipment of certain Seller products outside of the United States of America (USA) is restricted by US federal law and neither Seller's products nor the technology can be exported out of the US without Seller's prior written approval. In addition, certain Seller Products require a validated export/import license (DSP 5, 61, or 73) prior to shipment to certain countries. If required, Buyer agrees to submit the required paperwork to Seller to process an application to obtain the required import/export license(s) from the US State Department. Seller cannot guarantee US State Department approval and has the right to cancel any item(s) not approved for import/export by the US State Department.

13. Regulations and Restrictions. Buyer agrees to comply with all applicable laws, codes and license requirements, and controls of the United States and other applicable jurisdictions in connection with the use of Seller products including Buyer's acceptance of responsibility for the payment of any relevant taxes or duties. Buyer is responsible for understanding and verifying all local laws, regulations, restrictions and building code requirements for the purchase, delivery, receipt, storage, installation and use of Seller's Goods and Services. Seller may suspend or cancel Buyer's order, at Seller's sole discretion, for violation of regulations and restrictions.

14. Technology and Intellectual Property Rights. Buyer agrees that Seller claims, and has claim to, various proprietary rights of its Goods and Services, and Buyer agrees to take reasonably necessary steps to ensure that Seller's rights will not directly or indirectly be violated, which the parties agree would cause irreparable harm to Seller. Except for the license to use the Goods and Services, the sale of Goods and Services will not confer upon Buyer any license, express or implied, under any patents, trademarks, trade names, or other proprietary rights owned or controlled by Seller, its subsidiaries, affiliates, or suppliers; it being specifically understood and agreed that all the rights are reserved to Seller, its subsidiaries, affiliates, or suppliers. Buyer may not obscure, remove, or alter any copyright, trademark, service mark or other proprietary notices or legends on the products.

15. Design Changes. Seller reserves the right to make changes in design of any of its products without incurring any obligation to notify Buyer or to make the same change to products previously purchased by Buyer.

16. Reverse Engineering. Customer acknowledges and agrees that the products are the confidential, valuable, and proprietary assets of VirTra, and the parties agree that improper use or disclosure of the products would cause VirTra irreparable harm. Accordingly, as a material element of this Agreement and as an inducement for VirTra to enter into this Agreement, Customer hereby agrees that Customer shall not: (a) create or attempt to create by reverse engineering, disassembly, decomplication or otherwise, the internal structure, the source code, hardware design, or organization of any Product, or any part thereof, or to aid or to permit others to do so, except and only to the extent expressly permitted by applicable law; (b) copy, modify, or translate any portion of the products, unless otherwise agreed, develop any derivative works thereof or include any portion of the software in any other software program; (c) separate the Product into component parts for distribution or transfer to a third party; and (e) attempt to make or to aid or permit others to make similar products to the software or products with or without enhancements,

Docusign Envelope ID: 890A8E04-53D5-4574-A1D4-89019B925A3E

upgrades, or modifications.

17. Severable Provisions. If any provision of this Agreement is found to be invalid or unenforceable by a court of competent jurisdiction, then the remainder will remain in full force and effect and any invalid provision(s) will be modified or partially enforced by the court to the maximum extent permitted by law to effectuate the purpose of this agreement.

18. Limitation of Liability. To the maximum extent allowed by law, in no event shall Seller's cumulative liability to any party for any loss or damage resulting from any claims, demands, or actions arising out of or relating in any way to any purchase from Seller exceed the amounts received by Seller under the relevant purchase order, notwithstanding third-party purchases. In no event will Seller be liable for any special, indirect, incidental, exemplary, punitive, or consequential damages, however caused, whether for breach of warranty, breach of contract, negligence, strict liability, tort or under any other legal theory, even if Seller has been advised of the possibility of those damages or if those damages could have been reasonably foreseen, and notwithstanding any failure of essential purpose of any exclusive remedy provided in the Warranty. Seller disclaims any representation that it will be able to repair any product under Warranty or make a product exchange without risk to or loss of programs or data. Buyer agrees to release and save Seller harmless from any and all liability arising out of use or misuse of Seller product, including any claims for damages and personal injuries. Buyer agrees to assume all risks of loss and all liability for any damages and personal injury which may result from use or misuse of Seller product. Seller is not liable for any claims made by a third party or by Buyer for or on behalf of a third party.

19. Relationship of Parties. Nothing contained in this Agreement shall be construed as establishing or implying any partnership or joint venture between the parties and nothing in this Agreement shall be deemed to construe either of the parties as the agent of the other. Assignment and Sub-Contracting. The contract between Buyer and Seller for the Goods and Services shall not be assigned or transferred, nor the performance of any obligation sub-contracted, without the prior written consent of both Buyer and Seller. The parties agree that such consent shall not be unreasonably withheld.

20. Entire Agreement. This Agreement constitutes the entire agreement between the parties. This Agreement supersedes and replaces any prior agreement or understanding between the parties, including any oral representations concerning the subject matter of this Agreement. Any prior or extrinsic representations or agreements, with the exception of the product warranty, if provided and any service and license agreement(s), are intended to be discharged or nullified.

21. Governing Law, Jurisdiction, and Venue. The laws of the State of California, USA govern this transaction and Agreement, without regard to conflicts of law. Any litigation regarding the interpretation or enforcement of this Agreement shall be resolved in the State of California and the courts of California shall have exclusive jurisdiction over such litigation and the parties agree to such exclusive jurisdiction. The parties expressly reject any application of the United Nations Convention on Contracts for the International Sale of Goods ("CISG") to this Agreement and the associated transactions.

22. Warranty. Seller warrants the product manufactured by Seller for a period of one year from delivery to the agreed delivery point ('Warranty Period') will materially conform to Seller's standard specifications available from the Seller for the product at the time of the issuance of the Purchase Order. Seller further warrants that the product, at the time of delivery, will be free from defects in material and workmanship for the Warranty Period. For third party Products not manufactured by Seller, Seller's only responsibility is to assign to its customer any manufacturer's warranty that does not prohibit such assignment. Product and parts that are consumed in normal operation are not covered by this Warranty. Notwithstanding the foregoing, Warranty and support may be void for any and all equipment damaged or destroyed by improper handling, use or misuse.

To the maximum extent permitted by law, Seller's Warranty and the remedies set forth in that Warranty are exclusive and in lieu of all other warranties, remedies, and conditions, whether oral or written, statutory, express or implied, as permitted by applicable law, Seller specifically disclaims any and all statutory or implied warranties, including without limitation, warranties of merchantability, design, fitness for a particular purpose, arising from a course of dealing, usage or trade practice, warranties against hidden or latent defects, and warranties against patent infringement. Seller may provide VirTra certified refurbished parts. If Seller cannot lawfully disclaim statutory or implied warranties than to the extent permitted by law, all such warranties are limited to the duration of the express warranty described above and limited to the other provisions contained in this warranty statement. The remedies provided for in the warranty are expressly in lieu of any other liability Seller may have.

23. Buyer Ordered Delivery Delay. In the event of a delivery delay ordered by Buyer, the parties agree to make use of the following: Whereas the Customer has purchased certain products and services from VirTra under the Purchase Order; and Whereas the Customer has directed VirTra to hold and store within its premises the delivery until further notice; and Whereas VirTra shall ship the products FOB destination; and Whereas this Addendum does not operate as an acceptance of goods by the Customer. Now therefore, the parties agree that that VirTra has met its delivery obligations under the terms of sale upon meeting the following condition: VirTra shall provide to Customer photographs documenting that the Purchase Order is ready for shipment. An email from Buyer citing this section 23 shall be sufficient for the parties to process as described herein.

-Signature follows -

Docusign Envelope ID: 890A8E04-53D5-4574-A1D4-89019B925A3E

VirTra

295 E. Corporate Pl, Chandler, AZ 85225 USA | TOLL FREE: 800.455.8746 PH: 480.968.1488 FAX: 480.968.1448 | WWW.VIRTRA.COM

The Buyer agrees that this Agreement shall govern all purchase orders and related transactions.

Buyer:

Signature: _____

Printed Name: _____

Date: _____

SELECT PAYMENT METHOD

Credit Card; include contact information only (subject to limits)
Purchase Order:
Check:
Other (please specify):

Docusign Envelope ID: 890A8E04-53D5-4574-A1D4-89019B925A3E

NOTE(S):

1. ELECTRICAL: V-180 SYSTEM REQUIRES AT LEAST (3) DUAL OUTLETS EACH ON TWO SEPARATE 20AMP CIRCUITS: (2) AT THE PERIMETER OF THE SYSTEM BASE (110V 60Hz) AND (1) ABOVE THE CEILING MOUNTED PROJECTOR (110V 60Hz). ALL OUTLETS TO BE PROPERLY GROUNDED.
2. (P) = POWER RECEPTACLE ON WALL OR CEILING.
3. CUSTOMER TO PROVIDE MOUNTING STRUCTURE FOR PROJECTOR MOUNT PLATE, INCLUDING ALL-THREAD AS SHOWN ON SHEET 5. MOUNTING STRUCTURE REQ'D TO SUPPORT STATIC 200 lb. LOAD.
4. CUSTOMER TO INSTALL PROJECTOR MOUNT PLATE PRIOR TO SIMULATOR INSTALLATION. TOP OF PROJECTOR MOUNT PLATE TO BE INSTALLED AT HEIGHT INDICATED ON SHEET 4.
5. SYSTEM NOT TO ENCOUNTER AMBIENT LIGHT DURING TRAINING OR USE.
6. ROOM NEEDS ADEQUATE CLIMATE CONTROL FOR ELECTRONICS. SUGGESTED ENVIRONMENT ~65 TO 75 F
7. CUSTOMER IS RESPONSIBLE FOR FOLLOWING BUILDING/FIRE CODE FOR ANY MODIFICATIONS.
8. UNOBSTRUCTED ACCESS TO SIMULATOR ROOM REQUIRED.
9. GIVEN DIMENSIONS IN FEET' INCHES" AND ARE SUBJECT TO CHANGE.
10. SYSTEM REQUIRES AN UNOBSTRUCTED PROJECTOR IMAGE PATH.
11. AUDIO LEVEL CONTROLABLE ON A SCALE OF 0-100%. MAX 95db
12. INSTRUCTOR AND REFILL STATION DESKS SHOWN IN DRAWING ARE NOT INCLUDED, UNLESS LISTED ON ORDER
13. INTERNET NOT REQUIRED FOR SIMULATOR OPERATION, HOWEVER IT IS RECOMMENDED FOR SERVICE & SUPPORT.

CONFIGURATION NOTE(S):

1. **SYSTEM:** V-180LE-HD-FP (Low Profile) (1800000)
2. **SCREENS:** VirTra V-180® Projection Screen-FP (1800200)
3. **MOUNTING PACKAGE:** LE V-180® FP-Ceiling Low Profile Mounting Package (1800057) - 0" Drop Pipes (Qty. 3)
4. **CABLE PACKAGE:** LE V-180® 120 Ceiling Cable Package-STD(50ft) (1800060)
5. **FSR NOTE:** The Projector Plate will be mounted almost directly to the ceiling. FSR to determine best and cleanest way to run and manage overhead cabling.
6. **CUSTOMER** is responsible for raising the Sprinkler Pipes in the room to accommodate the V-180LE's Install.

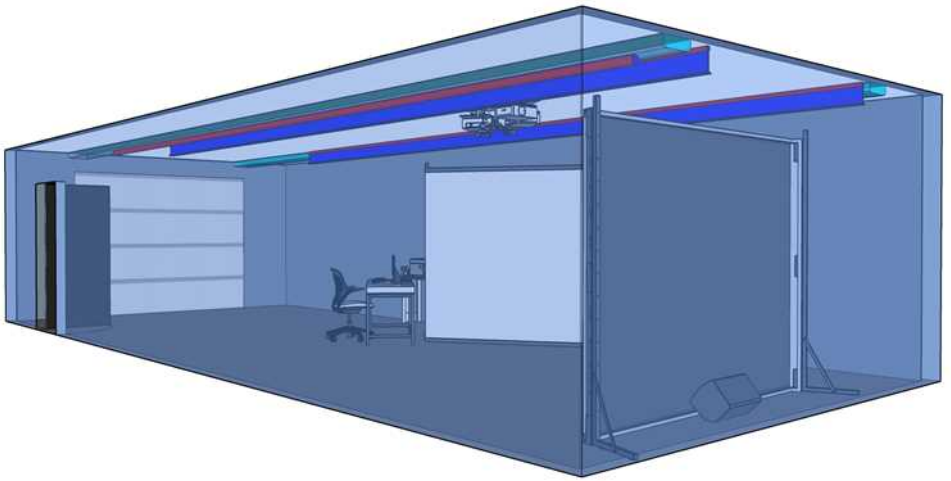

VirTra

SALES ORDER #: N/A

NEW INSTALL:
V-180HD-FP

Roseville PD
System(s): V-180LE

RSM: Ryan Bray | **Ver.** 4 | **TSS:** M.Hopp | 3/5/2024

Docusign Envelope ID: 890A8E04-53D5-4574-A1D4-89019B925A3E

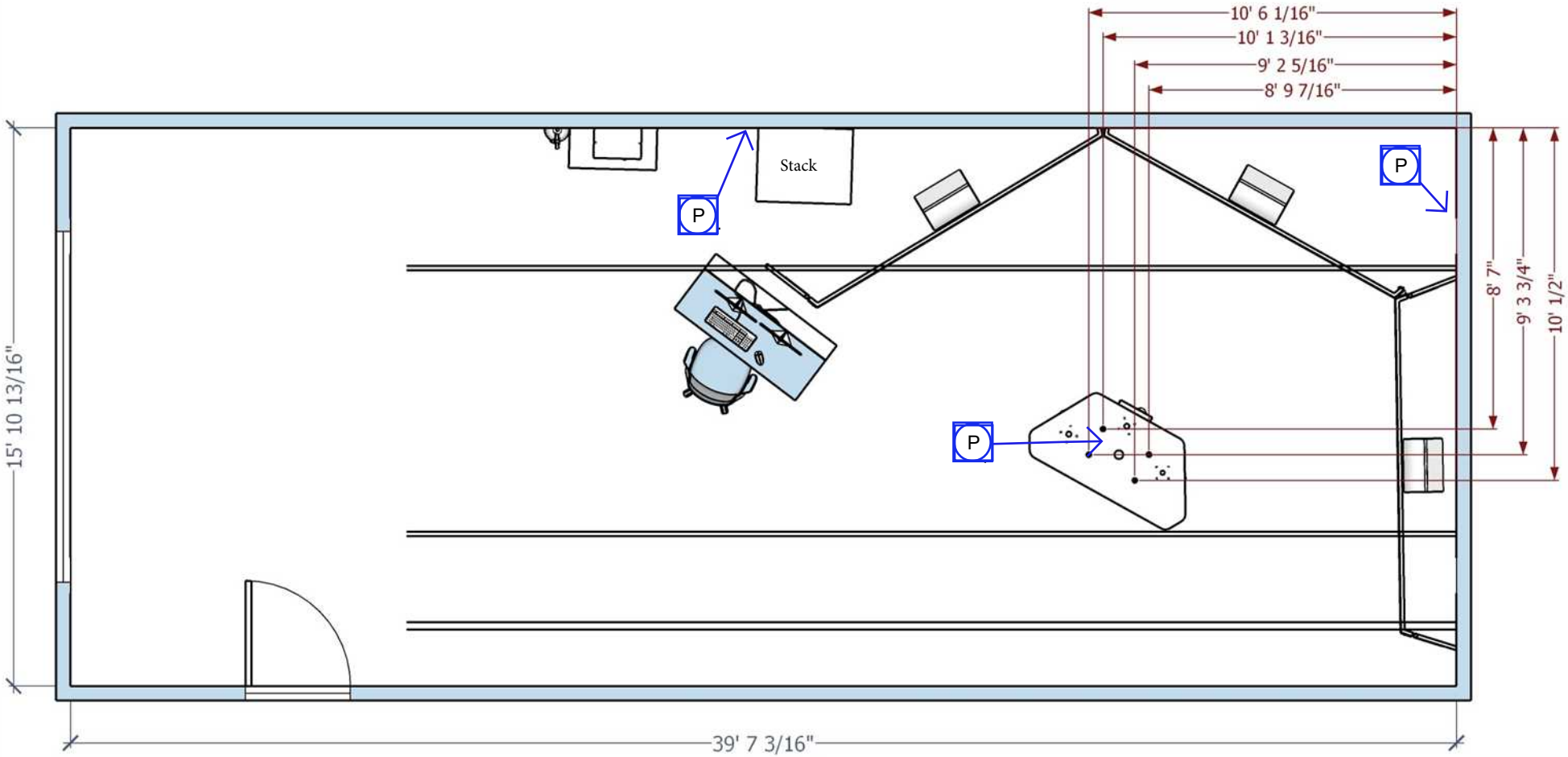

VirTra

SALES ORDER #: N/A

NEW INSTALL:
V-180HD-FP

Roseville PD
System(s): V-180LE

RSM: Ryan Bray | **Ver.** 4 | **TSS:** M.Hopp | 3/5/2024

Docusign Envelope ID: 890A8E04-53D5-4574-A1D4-89019B925A3E

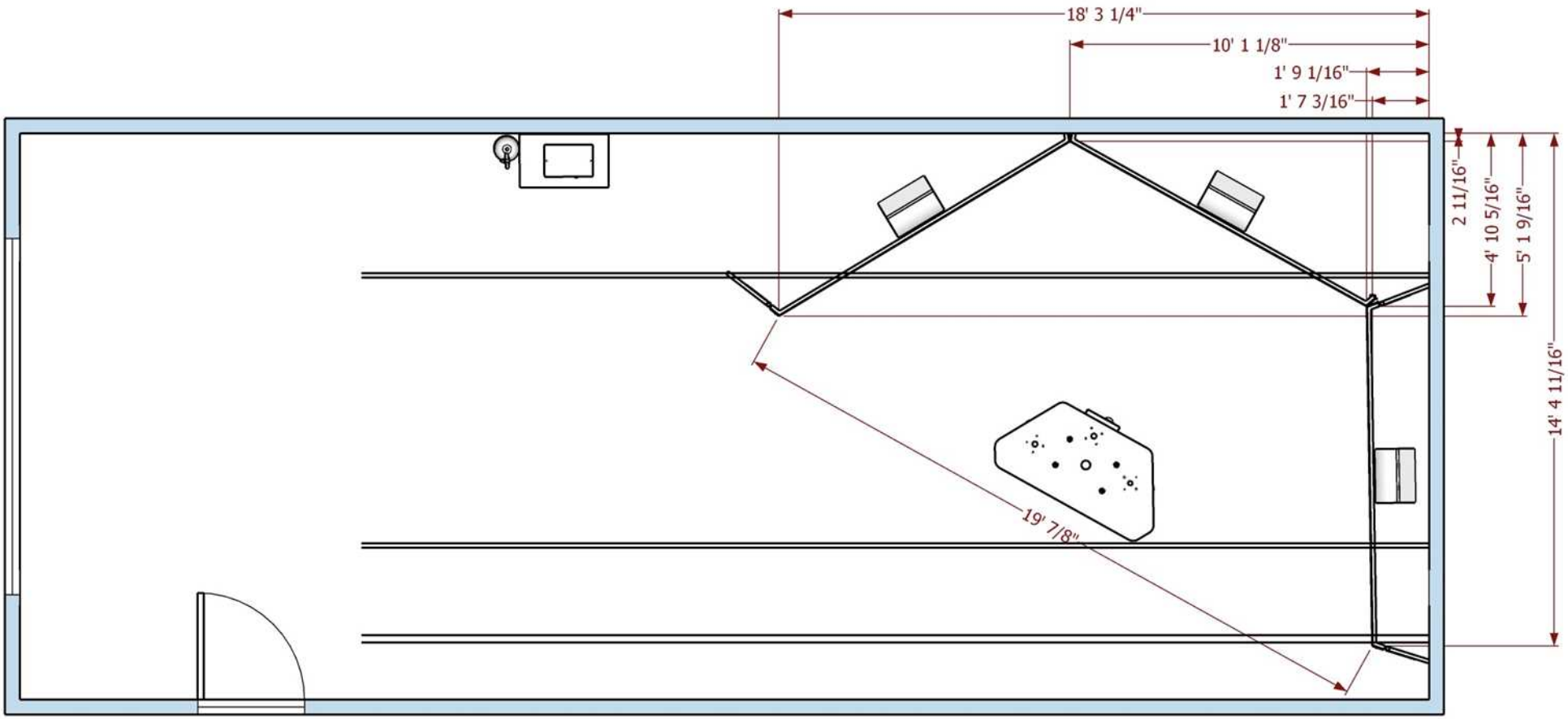

VirTra

SALES ORDER #: N/A

NEW INSTALL:
V-180HD-FP

Roseville PD
System(s): V-180LE

RSM: Ryan Bray | **Ver.** 4 | **TSS:** M.Hopp | 3/5/2024

Docusign Envelope ID: 890A8E04-53D5-4574-A1D4-89019B925A3E

SECTION A-A

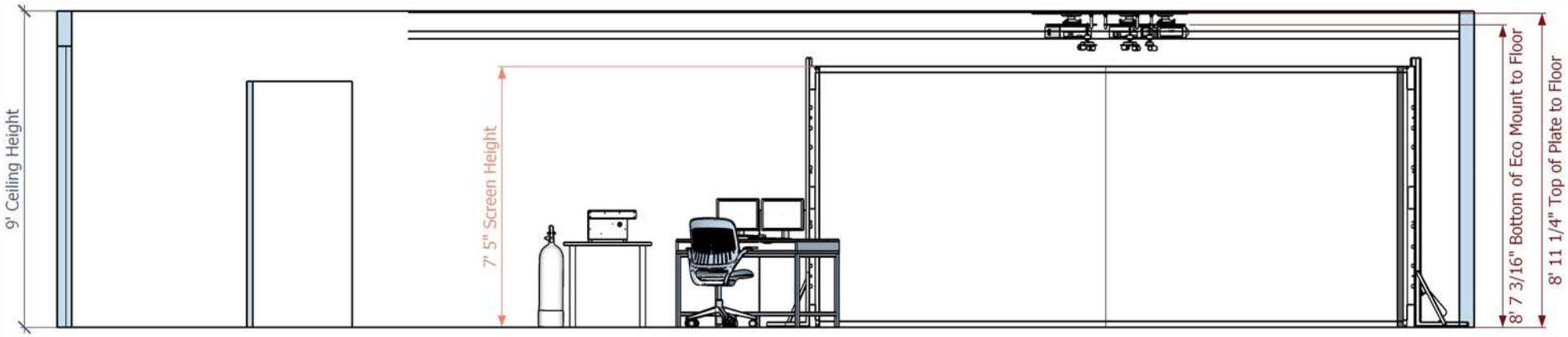

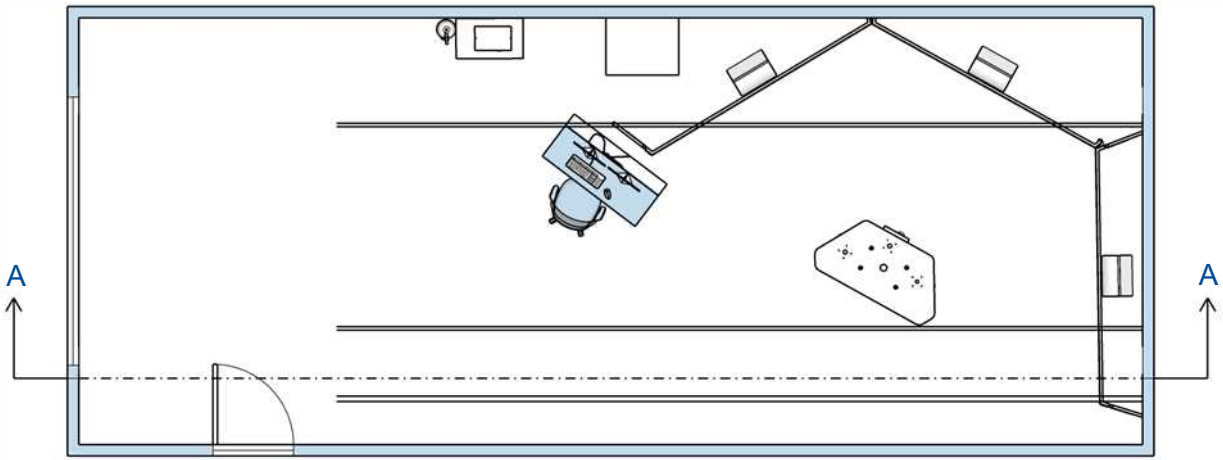

VirTra

SALES ORDER #: N/A

NEW INSTALL:
V-180HD-FP

Roseville PD
System(s): V-180LE

RSM: Ryan Bray | **Ver.** 4 | **TSS:** M.Hopp | 3/5/2024

Docusign Envelope ID: 890A8E04-53D5-4574-A1D4-89019B925A3E

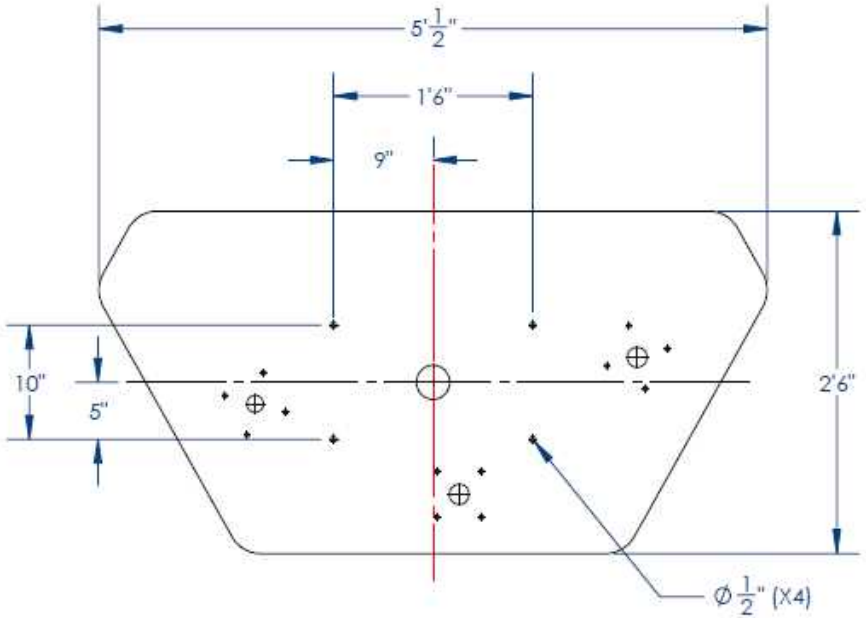

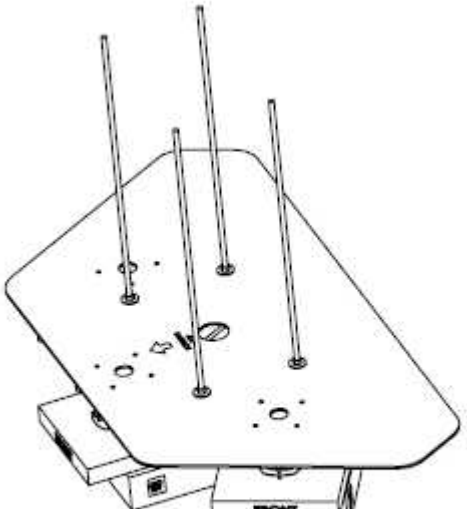

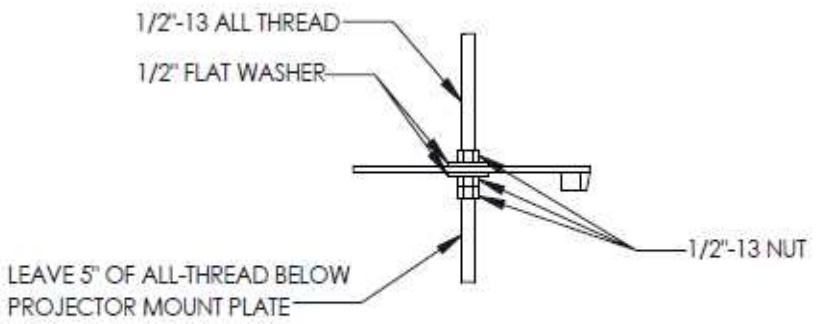

DETAIL B
SCALE 1 : 8

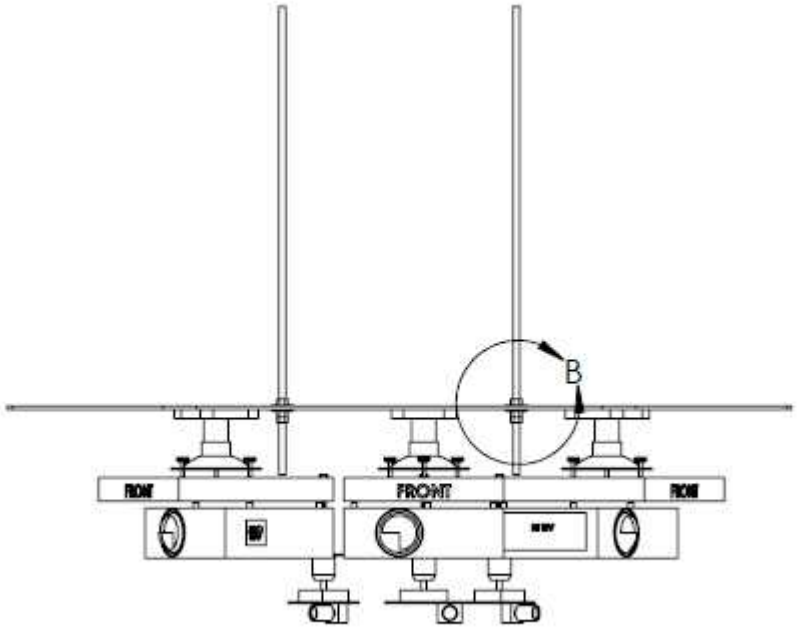

VirTra

SALES ORDER #: N/A

NEW INSTALL:
V-180HD-FP

Roseville PD
System(s): V-180LE

RSM: Ryan Bray | **Ver.** 4 | **TSS:** M.Hopp | 3/5/2024

VirTra

295 E. Corporate Pl, Chandler, AZ 85225 USA | TOLL FREE: 800.455.8746 PH: 480.968.1488 FAX: 480.968.1448 | WWW.VIRTRA.COM

Account Name	Roseville Police Department	CustID	0623-07086
Contact Name	Scott Miszkewycz	Created Date	7/23/2024
Phone	(916) 774-5000	Quote Number	00009087
Email	smiszkewycz@roseville.ca.us	Expiration Date	8/31/2024
Ship To Name	Roseville Police Department	Prepared By	Ryan Bray
		Phone	(480) 968-1488
		Extension	5012
		Email	rbray@virtra.com

Product	Product SKU	Product Code	Product Description	Sales Price	Quantity	Total Price
VirTra Virtual Interactive Coursework and Training Academy™	7001000	V-VICTA-01	VirTra-Virtual Interactive Coursework and Training Academy™ certified simulator training curriculum. V-VICTA™ is a progressive science based approach to the use of simulation as a training system. Program materials include teacher lesson plans, student outline, presentation material, pre-tests, post-tests, course evaluation and all interactive video learning material in conjunction with the simulator for each available course. Virtual Instructor scenarios teach, train, test and sustain methodology to ensure participants dynamically absorb information to facilitate long term transfer of critical psycho-motor skills. Available exclusively to all VirTra simulation systems under a current Service or Subscription plan.	$0.00	1.00	$0.00
VirTra 180 LE (w/ 1 year warranty)	1800000	V-180LE-1	VirTra Systems 180 LE-1 simulator system uses three interconnected screens to produce a more immersive training environment. Multi-directional training allows for scanning, situational awareness, acquiring and engaging moving targets and overcoming distractions. System includes LE content library, computer rack, UPS backup, and audio/projection equipment. System is configurable to fit in a variety of spaces (within minimum requirements). One year warranty and support services included.	$96,143.88	1.00	$96,143.88
VirTra V-180® Borderless Projection Screen-RP	1800201	VHU-BS-180-RP	Eliminates the 5 inch black border between screens to increase immersion on VirTra 180 systems. Rear-Project Dual Vision Screens	$10,110.39	1.00	$10,110.39
VirTra Tetherless-Glock 45	4004501	V-G45-KIT-1	Glock 45 Tetherless laser recoil kit with proprietary True-Fire™ technology to eliminate false-fire and double-shots during simulation training. Includes one G17 standard magazine. (All recoil kits convert real firearms which must be supplied by the customer).	$5,571.44	3.00	$16,714.32
VirTra Tetherless-Glock 17- Advanced Skills Magazine Gen 5	4001709	V-G17-ASM-G5	Advanced Skills Magazine for use with the VirTra V-G17-RK recoil systems. Includes needed V-17-RK Gen 5 Tailpiece and Wireless Station. Requires VOS 5.0.36 or higher to operate.	$2,789.07	3.00	$8,367.21
VirTra Tetherless-Glock 17/22-ASM Mag. Adapter Plate	4001711	V-17/22-ASM-AP	Adapter plate for the V-G17/22-ASM (Requires VirTra refill station).	$585.97	1.00	$585.97

VirTra Tetherless-Glock 17-Adapter Plate	4001710	V-G17-SM-AP	Adapter plate for the V-G17 (Requires VirTra refill station).	$585.97	1.00	$585.97
Weapon Mounted Flashlight-TLR1	5000202	V-FLT-TLR1	Model TLR-1 laser-based weapon mounted flashlight.	$1,521.92	2.00	$3,043.84
Handheld Flashlight-G2X	5000201	V-FLT-G2X	G2X laser-based handheld flashlight.	$1,009.70	2.00	$2,019.40
Refill Station	5000750	V-RFS	Table-top refill station for all refillable magazines. Includes automatic push button activation and one CO2 tank which must ship empty. Includes travel case.	$5,368.96	1.00	$5,368.96
OC Canister-MK3	5000501	V-OCC-MK3	Laser-based MK3 model OC training device.	$2,614.76	2.00	$5,229.52
TASER® X26 and X26P BLUE High Voltage Simulation Cartridge	5000551	V-TAS-X26/P	TASER® X26 simulation cartridge. Fits both X26 and X26P live TASER® handles. (X26/P handles supplied by customer.)	$1,960.39	2.00	$3,920.78
V-Threat-Fire®	5000610	V-TF	VirTra's patented V-Threat-Fire® return-fire simulator device. Attaches via integrated belt clip to deliver a safe and adjustable electrical impulse or vibration to trainee. Enhances realism and simulates physical threats during VirTra Training. No eye protection required. Requires wireless station, included. Requires VOS 5.0.36 or higher to integrate.	$4,406.69	2.00	$8,813.38

Total Price	$160,903.62
S&H	$1,400.00
Tax	$12,470.03
Grand Total	$174,773.65

Sales Terms and Conditions for Direct Sales to End Users/Buyer

1. Precedence. This Sales Terms and Conditions for Direct Sales to End Users/Buyers "Agreement" applies to Buyer's purchase of Goods and Services, as defined below, when purchased directly from VirTra "Seller". Any purchase of Goods and Services sold by Seller is expressly subject to and conditioned upon the terms and conditions set forth herein. By accepting delivery of the Goods and Services, Buyer accepts and is bound by this Agreement. Any different or conflicting additional terms set forth by, whether in Buyer's purchase order or another communication, are expressly rejected and will not be binding on Seller unless agreed to in writing by an authorized officer of Seller. Now therefore, for good and valuable consideration the receipt and sufficiency of which is hereby acknowledged by the parties, the parties agree as follows.

2. Definitions: The following capitalized words shall mean: "End Users/Buyer" means the organization or person who buys Seller's Goods and Services. "Goods and Services" means without limitation, the articles, products, accessories, and services to be supplied to Buyer by Seller. "Technology and Intellectual Property Rights" means all patents, registered and unregistered designs, copyright, trademarks, know-how, software, firmware, hardware, systems, components, or assemblies. "Seller" means VirTra, Inc., located at 295 E. Corporate Place, Chandler, AZ 85225, USA.

3. All Sales Final. All sales are final, and no returns, refunds or exchanges of the Goods and Services are allowed, except as provided by state or federal law, and, to the returns, refunds or exchanges are required by law, must be preapproved by Seller's Return Merchandise Authorization (RMA) form.

4. Restocking Fees. In Seller's sole discretion, all returns, refunds, or exchanges may be charged a restocking fee of up to 15% of the purchase price paid, plus any applicable shipping and sales tax, unless the returned product is defective, or the return is a direct result of Seller's error.

5. Payment Terms. Terms of payment are within Seller's sole discretion and, unless otherwise agreed to by Seller in writing, 50% deposit payment must be received prior to Seller's acceptance of an order with the remaining 50% balance due upon shipping.

Payment for Goods and Services will be made in United States currency ($US Dollar) by a preapproved payment method. Credit card payment terms must be preapproved by Seller's Finance Department and if approved, invoices are due and payable within the time period noted on invoices, measured from the date of the invoice. An additional 3% fee will be charged to cover processing costs. Seller may at its sole discretion invoice parts of an order separately. No discounts shall be given for early payments.

6. Suspension or Cancelation: Seller may suspend or cancel Buyer's order for any failure by Buyer to comply with agreed upon payment terms. Seller is not responsible for pricing, typographical, or other errors in any offer by Seller and reserves the right to cancel any orders resulting from such errors.

7. Late Payments. Interest and late payment fees may be calculated from the day after the payment's stated due date through the date payment is received in full, at the maximum legal allowable interest rate in effect on the applicable dates.

8. Taxes. Sales tax, end user tax, pass-through tax, value-added tax (VAT), transaction privilege tax, consumption tax, customs tax and/or duties are the sole responsibility of Buyer, and Buyer agrees to reimburse Seller for all applicable taxes that Seller is required to collect, regardless of the tax amount being excluded from Seller's quotes or Buyer's Purchase Orders.

9. **Tax Exemption**. If Buyer requests tax exempt status, then Buyer must provide Seller with a correct, valid, and signed tax exemption certificate applicable to the specific Goods and Services purchased, relevant to the end use location, prior to Seller invoicing. If an invalid tax exemption certificate is received or no tax exemption certificate is received, it will be the responsibility of Buyer to pay all required taxes. Additionally, it will be Buyer's responsibility to obtain any tax refunds permitted if Seller has collected and remitted taxes to a taxing authority.

10. Shipping, Title, Risk of Loss. Shipping and handling costs will be added to all invoices unless otherwise expressly indicated and agreed to in writing at the time of sale. Seller reserves the right to make partial shipments unless specifically stated otherwise on Buyer's signed Pro Forma Invoice or purchase order and such shipping terms are pre-approved by Seller in writing. Products may ship from multiple locations following the rules of the International Commercial Terms (Incoterms) as published by the International Chamber of Commerce (ICC). Title and risk of loss passes from Seller to Buyer FOB Origin domestic or Free Carrier (FCA) international upon Seller's delivery to the named place of delivery, cleared for export, as mutually agreed by both buyer and seller. Once seller is deemed to have delivered goods to the named place of delivery, the buyer is responsible for both unloading the goods and loading them onto their own carrier. Seller shall invoice upon shipping. Any loss or damage that occurs after seller's delivery is Buyer's responsibility. Buyer must promptly file claims for damaged items with the freight carrier. Shipping dates are estimates only.

11. Excusable Delays. Seller will use commercially reasonable efforts to deliver all products ordered as agreed or as soon as reasonably practicable. In the event of interruption of any delivery due to causes beyond the reasonable control of Seller, including but not limited to force majeure, fire, labor disturbances, riots, accidents, or inability to obtain necessary materials or components, Seller has the right, in its sole discretion and upon oral or written notice to Buyer, to delay or terminate the delivery.

12. Not for Resale or Export. Buyer represents and warrants that they are buying Seller's products for the specified end user, and Buyer will not resale or export Seller's products to a country other than the country listed as the Buyer's shipping destination. The shipment of certain Seller products outside of the United States of America (USA) is restricted by US federal law and neither Seller's products nor the technology can be exported out of the US without Seller's prior written approval. In addition, certain Seller Products require a validated export/import license (DSP 5, 61, or 73) prior to shipment to certain countries. If required, Buyer agrees to submit the required paperwork to Seller to process an application to obtain the required import/export license(s) from the US State Department. Seller cannot guarantee US State Department approval and has the right to cancel any item(s) not approved for import/export by the US State Department.

13. Regulations and Restrictions. Buyer agrees to comply with all applicable laws, codes and license requirements, and controls of the United States and other applicable jurisdictions in connection with the use of Seller products including Buyer's acceptance of responsibility for the payment of any relevant taxes or duties. Buyer is responsible for understanding and verifying all local laws, regulations, restrictions and building code requirements for the purchase, delivery, receipt, storage, installation and use of Seller's Goods and Services. Seller may suspend or cancel Buyer's order, at Seller's sole discretion, for violation of regulations and restrictions.

14. Technology and Intellectual Property Rights. Buyer agrees that Seller claims, and has claim to, various proprietary rights of its Goods and Services, and Buyer agrees to take reasonably necessary steps to ensure that Seller's rights will not directly or indirectly be violated, which the parties agree would cause irreparable harm to Seller. Except for the license to use the Goods and Services, the sale of Goods and Services will not confer upon Buyer any license, express or implied, under any patents, trademarks, trade names, or other proprietary rights owned or controlled by Seller, its subsidiaries, affiliates, or suppliers; it being specifically understood and agreed that all the rights are reserved to Seller, its subsidiaries, affiliates, or suppliers. Buyer may not obscure, remove, or alter any copyright, trademark, service mark or other proprietary notices or legends on the products.

15. Design Changes. Seller reserves the right to make changes in design of any of its products without incurring any obligation to notify Buyer or to make the same change to products previously purchased by Buyer.

16. Reverse Engineering. Customer acknowledges and agrees that the products are the confidential, valuable, and proprietary assets of VirTra, and the parties agree that improper use or disclosure of the products would cause VirTra irreparable harm. Accordingly, as a material element of this Agreement and as an inducement for VirTra to enter into this Agreement, Customer hereby agrees that Customer shall not: (a) create or attempt to create by reverse engineering, disassembly, decomplication or otherwise, the internal structure, the source code, hardware design, or organization of any Product, or any part thereof, or to aid or to permit others to do so, except and only to the extent expressly permitted by applicable law; (b) copy, modify, or translate any portion of the products, unless otherwise agreed, develop any derivative works thereof or include any portion of the software in any other software program; (c) separate the Product into component parts for distribution or transfer to a third party; and (e) attempt to make or to aid or permit others to make similar products to the software or products with or without enhancements, upgrades, or modifications.

17. Severable Provisions. If any provision of this Agreement is found to be invalid or unenforceable by a court of competent jurisdiction, then the remainder will remain in full force and effect and any invalid provision(s) will be modified or partially enforced by the court to the maximum extent permitted by law to effectuate the purpose of this agreement.

18. Limitation of Liability. To the maximum extent allowed by law, in no event shall Seller's cumulative liability to any party for any loss or damage resulting from any claims, demands, or actions arising out of or relating in any way to any purchase from Seller exceed the amounts received by Seller under the relevant purchase order, notwithstanding third-party purchases. In no event will Seller be liable for any special, indirect, incidental, exemplary, punitive, or consequential damages, however caused, whether for breach of warranty, breach of contract, negligence, strict liability, tort or under any other legal theory, even if Seller has been advised of the possibility of those damages or if those damages could have been reasonably foreseen, and notwithstanding any failure of essential purpose of any exclusive remedy provided in the Warranty. Seller disclaims any representation that it will be able to repair any product under Warranty or make a product exchange without risk to or loss of programs or data. Buyer agrees to release and save Seller harmless from any and all liability arising out of use or misuse of Seller product, including any claims for damages and personal injuries. Buyer agrees to assume all risks of loss and all liability for any damages and personal injury which may result from use or misuse of Seller product. Seller is not liable for any claims made by a third party or by Buyer for or on behalf of a third party.

19. Relationship of Parties. Nothing contained in this Agreement shall be construed as establishing or implying any partnership or joint venture between the parties and nothing in this Agreement shall be deemed to construe either of the parties as the agent of the other. Assignment and Sub-Contracting. The contract between Buyer and Seller for the Goods and Services shall not be assigned or transferred, nor the performance of any obligation sub-contracted, without the prior written consent of both Buyer and Seller. The parties agree that such consent shall not be unreasonably withheld.

20. Entire Agreement. This Agreement constitutes the entire agreement between the parties. This Agreement supersedes and replaces any prior agreement or understanding between the parties, including any oral representations concerning the subject matter of this Agreement. Any prior or extrinsic representations or agreements, with the exception of the product warranty, if provided and any service and license agreement(s), are intended to be discharged or nullified.

21. Governing Law, Jurisdiction, and Venue. The laws of the State of California, USA govern this transaction and Agreement, without regard to conflicts of law. Any litigation regarding the interpretation or enforcement of this Agreement shall be resolved in the State of California and the courts of California shall have exclusive jurisdiction over such litigation and the parties agree to such exclusive jurisdiction. The parties expressly reject any application of the United Nations Convention on Contracts for the International Sale of Goods ("CISG") to this Agreement and the associated transactions.

22. Warranty. Seller warrants the product manufactured by Seller for a period of one year from delivery to the agreed delivery point ('Warranty Period') will materially conform to Seller's standard specifications available from the Seller for the product at the time of the issuance of the Purchase Order. Seller further warrants that the product, at the time of delivery, will be free from defects in material and workmanship for the Warranty Period. For third party Products not manufactured by Seller, Seller's only responsibility is to assign to its customer any manufacturer's warranty that does not prohibit such assignment. Product and parts that are consumed in normal operation are not covered by this Warranty. Notwithstanding the foregoing, Warranty and support may be void for any and all equipment damaged or destroyed by improper handling, use or misuse.

To the maximum extent permitted by law, Seller's Warranty and the remedies set forth in that Warranty are exclusive and in lieu of all other warranties, remedies, and conditions, whether oral or written, statutory, express or implied, as permitted by applicable law, Seller specifically disclaims any and all statutory or implied warranties, including without limitation, warranties of merchantability, design, fitness for a particular purpose, arising from a course of dealing, usage or trade practice, warranties against hidden or latent defects, and warranties against patent infringement. Seller may provide VirTra certified refurbished parts. If Seller cannot lawfully disclaim statutory or implied warranties than to the extent permitted by law, all such warranties are limited to the duration of the express warranty described above and limited to the other provisions contained in this warranty statement. The remedies provided for in the warranty are expressly in lieu of any other liability Seller may have.

23. Buyer Ordered Delivery Delay. In the event of a delivery delay ordered by Buyer, the parties agree to make use of the

following: Whereas the Customer has purchased certain products and services from VirTra under the Purchase Order; and Whereas the Customer has directed VirTra to hold and store within its premises the delivery until further notice; and Whereas VirTra shall ship the products FOB destination; and Whereas this Addendum does not operate as an acceptance of goods by the Customer. Now therefore, the parties agree that that VirTra has met its delivery obligations under the terms of sale upon meeting the following condition: VirTra shall provide to Customer photographs documenting that the Purchase Order is ready for shipment. An email from Buyer citing this section 23 shall be sufficient for the parties to process as described herein.
-Signature follows -

The Buyer agrees that this Agreement shall govern all purchase orders and related transactions.

Buyer:

Signature: _____

Printed Name: _____

Date: _____

SELECT PAYMENT METHOD

Credit Card; include contact information only (subject to limits)
Purchase Order:
Check:
Other (please specify):

COUNCIL COMMUNICATION

CC #: 3497
File #: 0203-09

Title:	Water Endpoints Communication Modules and Associated Parts - Sole Source Purchase Order
Contact:	George Hanson 916-746-1764 ghanson@roseville.ca.us

Meeting Date: 8/21/2024
Item #: 7.6.

RECOMMENDATION TO COUNCIL

Staff recommends that the City Council approve a sole source purchase order with Itron for water endpoints and associated parts for FY2024-25 in the amount of $590,580.42.

BACKGROUND

The City of Roseville relies exclusively on Itron endpoints (ERTs) for its Advanced Metering Infrastructure (AMI) for water and electric systems. Itron has been the sole provider of these proprietary ERTs and the AMI network for over 20 years, specifically tailored to the City's needs. The ERTs have proven reliable over this period, and their continued use is crucial for the seamless operation of Roseville's Water Distribution and Electric systems. Given that there are no other providers in the region offering compatible products or services and considering the integration of these ERTs into the City's existing AMI infrastructure, it is vital to maintain this sole source relationship. This continuity supports the effective management and maintenance of over 50,000 endpoints and ensures the ongoing reliability and financial sustainability of the Water Utility operations. Approval for the sole source procurement from Itron is critical to upholding the efficiency and effectiveness of the City's utility services.

FISCAL IMPACT

Funding for the annual purchase of endpoints will be from the Water Operations Fund at $125,580.42 and reimbursed via meter sales to new development. Funding for the portion of the new endpoints slated to replace existing malfunctioning endpoints will be from the Water Rehabilitation Fund at $465,000.

This purchase order is sole source due to Itron being the sole provider of AMI 500W Water ERT's within this region, and that the units are custom built to be compatible with Roseville's AMI system.

ENVIRONMENTAL REVIEW

The California Environmental Quality Act (CEQA) does not apply to activities that will not result in a direct or reasonably foreseeable indirect physical change in the environment, or is otherwise not considered a project as defined by CEQA Statute §21065 and CEQA State Guidelines §15060(c)(3) and §15378. A sole source purchase order meets the above criteria and is not subject to CEQA. No additional environmental review is required.

CITY COUNCIL STRATEGIC PLAN/OVERARCHING GOALS

Goal A - Remain fiscally responsible in a changing world
Goal E - Deliver exceptional city services
Goal F - Invest in well-planned infrastructure and growth

Respectfully Submitted,

George Hanson, Water Utility Manager

Richard Plecker, Environmental Utilities Director

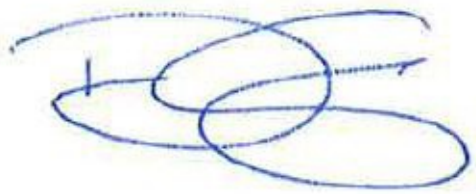

_____
Dominick Casey, City Manager

ATTACHMENTS:
Description

COUNCIL COMMUNICATION

CC #: 3491
File #: 0721

Title:	Transit Advertising - Agreement Amendment
Contact:	Ed Scofield 916-774-5449 ecscofield@roseville.ca.us

Meeting Date: 8/21/2024
Item #: 7.7.

RECOMMENDATION TO COUNCIL

Staff recommends that the City Council adopt a resolution authorizing the City Manager to execute the First Amendment to the Agreement between the City of Roseville and Iron Horse Media for advertising on Roseville Transit buses.

BACKGROUND

A five-year agreement between Roseville and Iron Horse Media was approved by the City Council on September 9, 2019. This agreement is effective October 1, 2019 through September 30, 2024. As part of the agreement, prior to the expiration of the agreement, the parties (Roseville and Iron Horse Media) may extend the term of the agreement for one additional two-year period.

Staff is seeking to exercise this two-year option which guarantees Roseville Transit a minimum of $121,500 in revenue annually for the two additional years. If approved, the contract with Iron Horse Media would terminate on September 30, 2026.

FISCAL IMPACT

The proposed amendment would guarantee Roseville Transit a minimum of $121,500 in annual revenue for the additional two years. If Iron Horse Media generates more than the minimum, the City of Roseville would receive whichever is greater: $121,500 or 40% of the yearly revenue. Per federal regulations, the revenue earned from advertising must be placed in the Transit Fund and used for transit operations.

ENVIRONMENTAL REVIEW

The California Environmental Quality Act (CEQA) does not apply to activities that will not result in a direct or reasonably foreseeable indirect physical change in the environment or is otherwise not considered a project as defined by CEQA Statute §21065 and CEQA State Guidelines

§15060(c)(3) and §15378. Transit advertising services meets the above criteria and are not subject to CEQA. No additional environmental review is required

CITY COUNCIL STRATEGIC PLAN/OVERARCHING GOALS

Goal D - Enhance economic vitality
Goal E - Deliver exceptional city services

Respectfully Submitted,

Ed Scofield, Alternative Transportation Manager

Jason Shykowski, Public Works Director

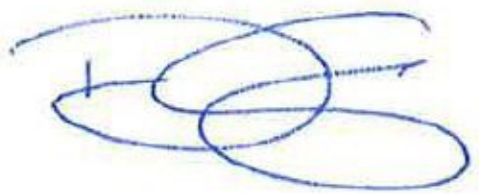

Dominick Casey, City Manager

ATTACHMENTS:

Description

Resolution 24-291

Amendment 1 Iron Horse Signed Contract

RESOLUTION NO. 24-291

APPROVING A FIRST AMENDMENT TO AGREEMENT FOR TRANSIT ADVERTISING SERVICES, BY AND BETWEEN THE CITY OF ROSEVILLE AND IRON HORSE MEDIA, LLC, AND AUTHORIZING THE CITY MANAGER TO EXECUTE IT ON BEHALF OF THE CITY OF ROSEVILLE

WHEREAS, a First Amendment to Agreement for Transit Advertising Services, by and between the City of Roseville and Iron Horse Media, LLC, has been reviewed by the City Council; and

NOW, THEREFORE, BE IT RESOLVED by the Council of the City of Roseville that said First amendment is hereby approved and that the City Manager is authorized to execute it on behalf of the City of Roseville.

PASSED AND ADOPTED by the Council of the City of Roseville this____day of _____, 20_, by the following vote on roll call:

AYES COUNCILMEMBERS:

NOES COUNCILMEMBERS:

ABSENT COUNCILMEMBERS:

_____
MAYOR

ATTEST:

_____
City Clerk

FIRST AMENDMENT TO AGREEMENT

FOR TRANSIT ADVERTISING SERVICES

THIS FIRST AMENDMENT TO AGREEMENT is made and entered into this ___ day of _____, 20__, by and between the City of Roseville, a municipal corporation ("CITY"), and Iron Horse Media, LLC, a California limited liability company ("CONTRACTOR"); and

W I T N E S S E T H:

WHEREAS, CITY and CONTRACTOR previously entered into an Agreement for Transit Advertising Services dated September 4, 2019 ("Agreement") regarding transit vehicle advertising services; and

WHEREAS, CITY is exercising its option to extend the term of the Agreement for an additional two (2) year period and CONTRACTOR is willing and able to provide such services.

NOW, THEREFORE, the parties agree as follows:

1. Section 2 of the Agreement is amended by adding an additional paragraph to read as follows:

"CITY is exercising its option to extend the term of the Agreement for an additional two (2) year period commencing October 1, 2024 and ending on September 30, 2026."

2. The Agreement is amended by adding an additional paragraph for compliance with AB334 to read as follows:

"48. Public Contracts: Conflicts of Interest. CONTRACTOR's duties and services under this Agreement shall not include preparing or assisting CITY with any portion of the CITY's preparation of a request for proposals, request for qualifications, or any other solicitation regarding a subsequent or additional contract with CITY. CITY shall at all times retain responsibility for public contracting, including with respect to any subsequent phase of this project. CONTRACTOR's participation in the planning, discussions, or drawing of project plans or specifications shall be limited to conceptual, preliminary, or initial plans or specifications. CONTRACTOR shall cooperate with CITY to ensure that all bidders for a subsequent contract on any subsequent phase of this project have access to the same information, including all conceptual, preliminary, or initial plans or specifications prepared by CONTRACTOR pursuant to this Agreement."

3. The Agreement is further amended by adding an additional paragraph regarding compliance with the Levine Act:

"49. The Levine Act Disclosure. The Levine Act (Govt. Code, Section 84308) requires a Party (and its agent(s), if any) to a Proceeding before the City of Roseville that involves any action or consideration related to their contract, license, permit, or other entitlement for use, to disclose any campaign contributions made to CITY elected or appointed officers totaling more than $250 within the twelve (12) months prior to the CITY decision and while a proceeding is pending, and includes certain prohibitions on contribution activity thereafter. If applicable campaign contributions have been made by CONTRACTOR and/or its agent(s), CONTRACTOR is responsible for compliance,

including for its disclosure obligations, if any, as further described at https://www.roseville.ca.us/government/departments/city_clerk/transparency/levine_act."

4. All other provisions of the Agreement shall remain unchanged and in full force and effect.

IN WITNESS WHEREOF, the City of Roseville, a municipal corporation, has authorized the execution of this First Amendment to Agreement in duplicate by its City Manager and attested to by its City Clerk under the authority of Resolution No. _____, adopted by the Council of the City of Roseville on the ___ day of _____, 20__, and CONTRACTOR has caused this First Amendment to Agreement to be executed.

CITY OF ROSEVILLE, a municipal corporation

BY: _____
DOMINICK CASEY
City Manager

ATTEST:

BY: _____
CARMEN AVALOS
City Clerk

IRON HORSE MEDIA, LLC, a California limited liability company

BY: David Nybo Digitally signed by David Nybo Date: 2024.07.11 16:32:48 -07'00'
its: _____

(SIGNATURES CONTINUED ON NEXT PAGE)

APPROVED AS TO FORM:

BY: _____
MICHELLE SHEIDENBERGER
City Attorney

APPROVED AS TO SUBSTANCE:

BY: Jason Shykowski Digitally signed by Jason Shykowski Date: 2024.07.16 10:32:22 -07'00' _____
JASON SHYKOWSKI
Public Works Director

COUNCIL COMMUNICATION

CC #: 3484
File #: 0400-04-13-1 & 0400-07

Title:	Creekview Phase 4 Village 20 Subdivision - Final Map and Subdivision Agreement
Contact:	Jeff Hendrix 916-774-5463 jhendrix@roseville.ca.us

Meeting Date: 8/21/2024
Item #: 7.8.

RECOMMENDATION TO COUNCIL

It is recommended that the City Council take the following actions:

1. Approve the final map on file with the City Clerk and accept on behalf of the public, the public utility easements, and accept, subject to improvement, Lots A, B, C and D and the rights of way offered thereon; and
2. Adopt the attached resolution approving the Subdivision Agreement and authorizing the City Manager to execute the agreement on behalf of the City.

BACKGROUND

The Development Services Department, Engineering Division, has reviewed the subject final map and found that it is in compliance with the Subdivision Map Act and the City's Subdivision Ordinance and all conditions of the tentative map have been met. This map will create 77 residential lots and 4 public landscape lots.

FISCAL IMPACT

There is no fiscal impact to the City's General Fund associated with this approval.

ENVIRONMENTAL REVIEW

Development of the Creekview Phase 4 Village 20 project was previously evaluated in the Creekview Specific Plan EIR (certified September 19, 2012 SCH No. 2008032017), and identified in the associated Creekview Specific Plan. Construction of the Creekview Phase 4 Village 20 project is found to be within the scope of the project covered by the Creekview Specific Plan EIR, and is therefore exempt from CEQA pursuant to Section 15182. As discussed in the Specific Plan EIR, the EIR provides environmental analyses of community infrastructure and facilities, including residential subdivisions. Because the project is consistent with the Creekview

Specific Plan EIR and Specific Plan, no new effects would be expected to occur and all applicable mitigation measures from the Creekview Specific Plan EIR will be implemented during the design and construction of the Creekview Phase 4 Village 20 project. Because the proposed project meets the requirements identified in the State CEQA Guidelines Section 15183, no additional CEQA review is required.

CITY COUNCIL STRATEGIC PLAN/OVERARCHING GOALS

Goal F - Invest in well-planned infrastructure and growth

Respectfully Submitted,

Jeff Hendrix, Associate Engineer

Mike Isom, Development Services Director

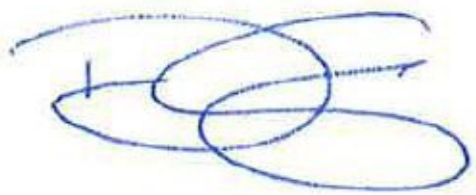

_____

Dominick Casey, City Manager

ATTACHMENTS:

Description

Vicinity Map

Final Map

Resolution 24-285

Subdivision Agreement

CREEKVIEW PHASE 4 VILLAGE 20

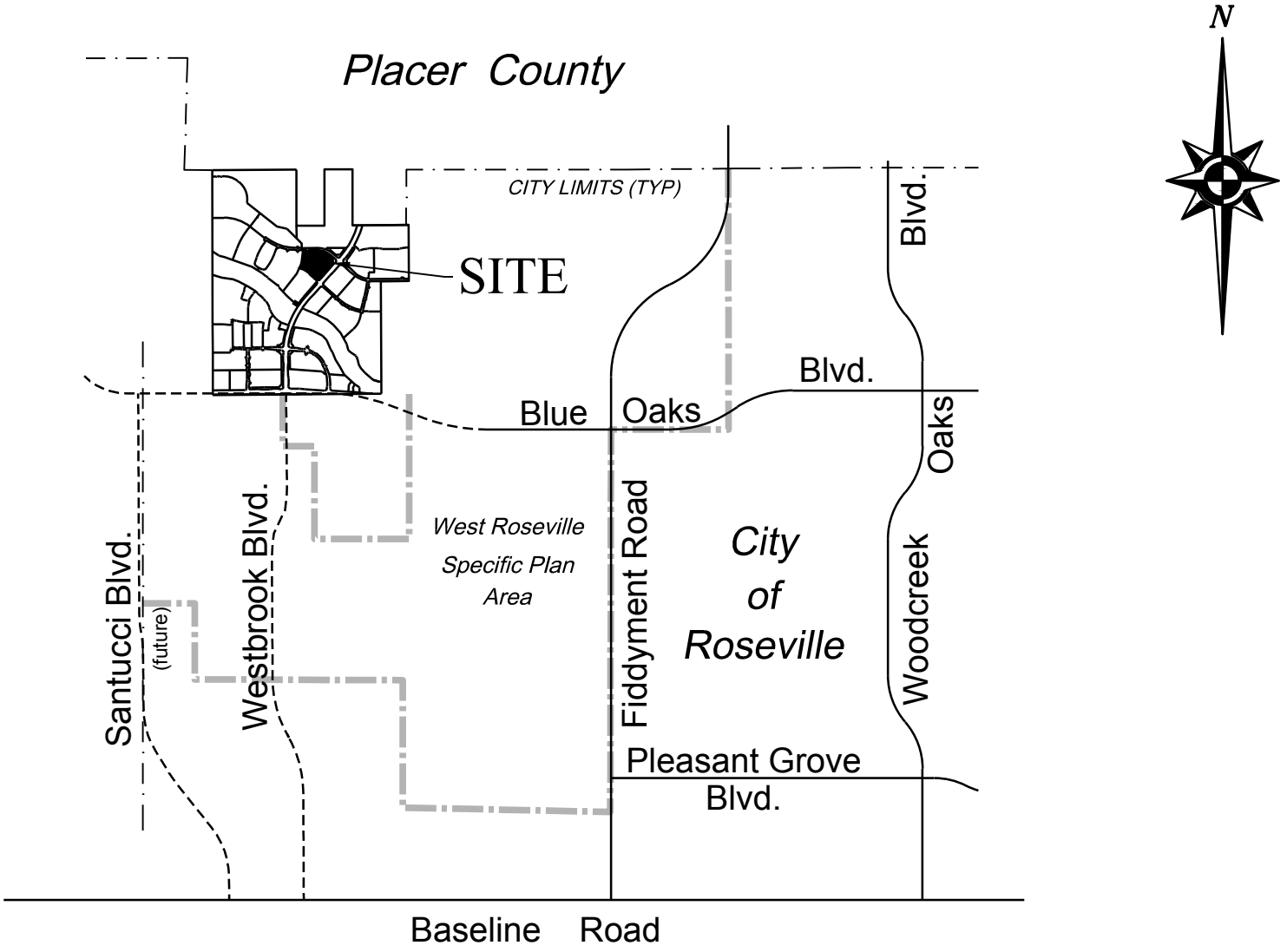

VICINITY MAP

BOOK_____ OF MAPS, PAGE_____

OWNER'S STATEMENT

THE UNDERSIGNED HEREBY CERTIFY THAT THEY ARE THE ONLY PERSONS HAVING ANY RECORD TITLE INTEREST IN THE REAL PROPERTY INCLUDED WITHIN THE SUBDIVISION SHOWN UPON THIS FINAL MAP OF "CREEKVIEW PHASE 4 VILLAGE 20" AND THEY HEREBY CONSENT TO THE PREPARATION AND RECORDATION OF THIS FINAL MAP AND HEREBY OFFER FOR DEDICATION AND DO HEREBY DEDICATE FOR SPECIFIC PURPOSES THE FOLLOWING:

THE REAL PROPERTY DESCRIBED BELOW IS DEDICATED AS EASEMENTS FOR PUBLIC PURPOSES:

(A) A PUBLIC EASEMENT FOR THE INSTALLATION AND MAINTENANCE OF, BUT NOT LIMITED TO ELECTROLIERS, WATER AND GAS PIPES, SEWER AND DRAINAGE PIPES, AND FOR UNDERGROUND WIRE AND CONDUITS FOR ELECTRIC, TELEPHONE AND TELEVISION SERVICES AND TRAFFIC CONTROL APPURTENANCES TOGETHER WITH ANY AND ALL APPURTENANCES PERTAINING THERETO ON, OVER, UNDER AND ACROSS LOTS A, B, C AND D, THE STREETS SHOWN HEREON AS WHIPPERSNAPPER WAY, LONE SYCAMORE STREET, AND VIBRANT DRIVE AND THOSE STRIPS OF LAND LYING CONTIGUOUS TO THE RIGHTS-OF-WAY AS SHOWN HEREON AND DESIGNATED "PUE" (PUBLIC UTILITY EASEMENT).

THE REAL PROPERTY DESCRIBED BELOW IS DEDICATED IN FEE FOR PUBLIC PURPOSES:

(A) AS PUBLIC RIGHTS-OF-WAY (INCLUDING ALL IMPROVEMENTS THEREON) THE STREETS SHOWN HEREON AS WHIPPERSNAPPER WAY, LONE SYCAMORE STREET, AND VIBRANT DRIVE.

(B) LOTS A, B, C AND D AS SHOWN HEREON TO THE CITY OF ROSEVILLE FOR LANDSCAPING AND AS PUBLIC RIGHTS-OF-WAY.

ANTHEM UNITED CREEKVIEW DEVELOPMENTS LIMITED PARTNERSHIP,
A WASHINGTON LIMITED PARTNERSHIP

BY: _____

_____

NOTARY'S ACKNOWLEDGMENT

A NOTARY PUBLIC OR OTHER OFFICER COMPLETING THIS CERTIFICATE VERIFIES ONLY THE IDENTITY OF THE INDIVIDUAL WHO SIGNED THE DOCUMENT TO WHICH THIS CERTIFICATE IS ATTACHED, AND NOT THE TRUTHFULNESS, ACCURACY OR VALIDITY OF THAT DOCUMENT.

STATE OF CALIFORNIA

COUNTY OF _____

ON_____ BEFORE ME,_____, A NOTARY PUBLIC

PERSONALLY APPEARED _____
WHO PROVED TO ME ON THE BASIS OF SATISFACTORY EVIDENCE TO BE THE PERSON(S) WHOSE NAME(S) IS/ARE SUBSCRIBED TO THE WITHIN INSTRUMENT AND ACKNOWLEDGED TO ME THAT HE/SHE/THEY EXECUTED THE SAME IN HIS/HER/THEIR AUTHORIZED CAPACITY(IES), AND THAT BY HIS/HER/THEIR SIGNATURE(S) ON THE INSTRUMENT THE PERSON(S), OR THE ENTITY UPON BEHALF OF WHICH THE PERSON(S) ACTED, EXECUTED THE INSTRUMENT.

I CERTIFY UNDER PENALTY OF PERJURY UNDER THE LAWS OF THE STATE OF CALIFORNIA THAT THE FOREGOING PARAGRAPH IS TRUE AND CORRECT.

WITNESS MY HAND AND OFFICIAL SEAL.

_____
SIGNATURE PRINTED NAME

MY PRINCIPAL PLACE OF BUSINESS IS _____COUNTY

MY COMMISSION EXPIRES: _____ MY COMMISSION NUMBER: _____

TRUSTEE'S STATEMENT

FIRST AMERICAN TITLE INSURANCE COMPANY, AS TRUSTEE UNDER THAT CERTAIN CONSTRUCTION DEED OF TRUST AND SECURITY AGREEMENT RECORDED ON JUNE 29, 2023, AS INSTRUMENT NO. 2023-0033905, ORPC AND MODIFIED BY INSTRUMENT NO. 2023-0033906 ORPC, HEREBY CONSENTS TO THE RECORDING OF THIS MAP AND THE SUBDIVISION OF THE LANDS SHOWN HEREON.

BY: _____

_____

_____

NOTARY'S ACKNOWLEDGMENT

A NOTARY PUBLIC OR OTHER OFFICER COMPLETING THIS CERTIFICATE VERIFIES ONLY THE IDENTITY OF THE INDIVIDUAL WHO SIGNED THE DOCUMENT TO WHICH THIS CERTIFICATE IS ATTACHED, AND NOT THE TRUTHFULNESS, ACCURACY OR VALIDITY OF THAT DOCUMENT.

STATE OF CALIFORNIA

COUNTY OF _____

ON_____ BEFORE ME,_____, A NOTARY PUBLIC

PERSONALLY APPEARED _____
WHO PROVED TO ME ON THE BASIS OF SATISFACTORY EVIDENCE TO BE THE PERSON(S) WHOSE NAME(S) IS/ARE SUBSCRIBED TO THE WITHIN INSTRUMENT AND ACKNOWLEDGED TO ME THAT HE/SHE/THEY EXECUTED THE SAME IN HIS/HER/THEIR AUTHORIZED CAPACITY(IES), AND THAT BY HIS/HER/THEIR SIGNATURE(S) ON THE INSTRUMENT THE PERSON(S), OR THE ENTITY UPON BEHALF OF WHICH THE PERSON(S) ACTED, EXECUTED THE INSTRUMENT.

I CERTIFY UNDER PENALTY OF PERJURY UNDER THE LAWS OF THE STATE OF CALIFORNIA THAT THE FOREGOING PARAGRAPH IS TRUE AND CORRECT.

WITNESS MY HAND AND OFFICIAL SEAL.

_____
SIGNATURE PRINTED NAME

MY PRINCIPAL PLACE OF BUSINESS IS _____COUNTY

MY COMMISSION EXPIRES: _____ MY COMMISSION NUMBER: _____

SURVEYOR'S STATEMENT

THIS MAP OF "CREEKVIEW PHASE 4 VILLAGE 20" WAS PREPARED BY ME OR UNDER MY DIRECTION AND IS BASED UPON A FIELD SURVEY IN CONFORMANCE WITH THE REQUIREMENTS OF THE SUBDIVISION MAP ACT AND LOCAL ORDINANCE AT THE REQUEST OF ANTHEM UNITED CREEKVIEW DEVELOPMENTS LIMITED PARTNERSHIP, IN JANUARY, 2019, I HEREBY STATE THAT THE SURVEY IS TRUE AND COMPLETE AS SHOWN, THAT ALL THE MONUMENTS ARE OF THE CHARACTER AND OCCUPY THE POSITIONS INDICATED OR THAT THEY WILL BE SET IN THOSE POSITIONS BEFORE DECEMBER 31, 2026, AND THAT THE MONUMENTS ARE, OR WILL BE, SUFFICIENT TO ENABLE THE SURVEY TO BE RETRACED, AND THAT THIS FINAL MAP SUBSTANTIALLY CONFORMS TO THE CONDITIONALLY APPROVED TENTATIVE MAP.

MACKAY & SOMPS CIVIL ENGINEERS, INC.

BY: _____
PEDRO JARQUIN., PLS 8268
EXPIRATION DATE: DECEMBER 31, 2025

DATE: _____

CITY ENGINEER'S STATEMENT

I HEREBY STATE THAT I HAVE EXAMINED THIS FINAL MAP OF "CREEKVIEW PHASE 4 VILLAGE 20" AND FIND IT TO BE SUBSTANTIALLY THE SAME AS THE TENTATIVE MAP ON FILE AND ANY APPROVED ALTERATIONS THEREOF; THAT ALL PROVISIONS OF THE SUBDIVISION MAP ACT AND ALL APPLICABLE CITY ORDINANCES HAVE BEEN COMPLIED WITH.

_____ DATE: _____

MARC STOUT, R.C.E. 69879
CITY ENGINEER, CITY OF ROSEVILLE
LICENSE EXPIRES: SEPTEMBER 30, 2024

I HEREBY STATE THAT I AM SATISFIED THIS FINAL MAP OF "CREEKVIEW PHASE 4 VILLAGE 20" IS TECHNICALLY CORRECT.

FOR MARC STOUT, CITY ENGINEER, CITY OF ROSEVILLE

_____ DATE: _____

TIMOTHY G. BLAIR, PLS 8278
EXPIRES DECEMBER 31, 2025

CITY CLERK'S STATEMENT

I HEREBY CERTIFY THAT THE CITY COUNCIL, CITY OF ROSEVILLE, HAS APPROVED THIS FINAL MAP OF "CREEKVIEW PHASE 4 VILLAGE 20" AND HAS ACCEPTED ON BEHALF OF THE PUBLIC, THE PUBLIC UTILITY EASEMENTS OFFERED HEREON FOR DEDICATION AND HAS ACCEPTED, SUBJECT TO IMPROVEMENT, LOTS A, B, C AND D AND THE RIGHTS-OF-WAY OFFERED HEREON FOR DEDICATION, AND HEREBY APPROVES THE ABANDONMENT OF THE EASEMENTS LISTED WITHIN NOTE 5 ON SHEET 2.

_____
CITY CLERK, CITY OF ROSEVILLE

DATE: _____ BY: _____
ASSISTANT CITY CLERK

RECORDER'S STATEMENT

FILED THIS _____ DAY OF _____, 2024, AT _____ .M. IN BOOK _____ OF MAPS, AT PAGE _____, IN THE OFFICE OF THE PLACER COUNTY RECORDER, AT THE REQUEST OF MACKAY & SOMPS CIVIL ENGINEERS, INC.

_____ DOCUMENT NO.: _____
RECORDER OF PLACER COUNTY
STATE OF CALIFORNIA

BY:_____ FEE: $ _____
DEPUTY

FINAL MAP OF

CREEKVIEW PHASE 4 VILLAGE 20

SUBDIVISION NO. PL20-0201

LOT 13 AS SHOWN ON THAT CERTAIN FINAL MAP TITLED "CREEKVIEW - PHASE 3 LARGE LOT SUBDIVISION, SUBDIVISION NO. PL20-0201", FILED FOR RECORD ON DECEMBER 2, 2021, IN BOOK FF OF MAPS AT PAGE 84, PLACER COUNTY RECORDS, WITHIN SECTION 14, TOWNSHIP 11 NORTH, RANGE 5 EAST, MOUNT DIABLO MERIDIAN

CITY OF ROSEVILLE • PLACER COUNTY • CALIFORNIA

MACKAY & SOMPS
ENGINEERS PLANNERS SURVEYORS
1025 Creekside Ridge Drive, Suite 150, Roseville, CA 95678 (916) 773-1189

AUGUST 2024

 18431.CV.PH4.V20

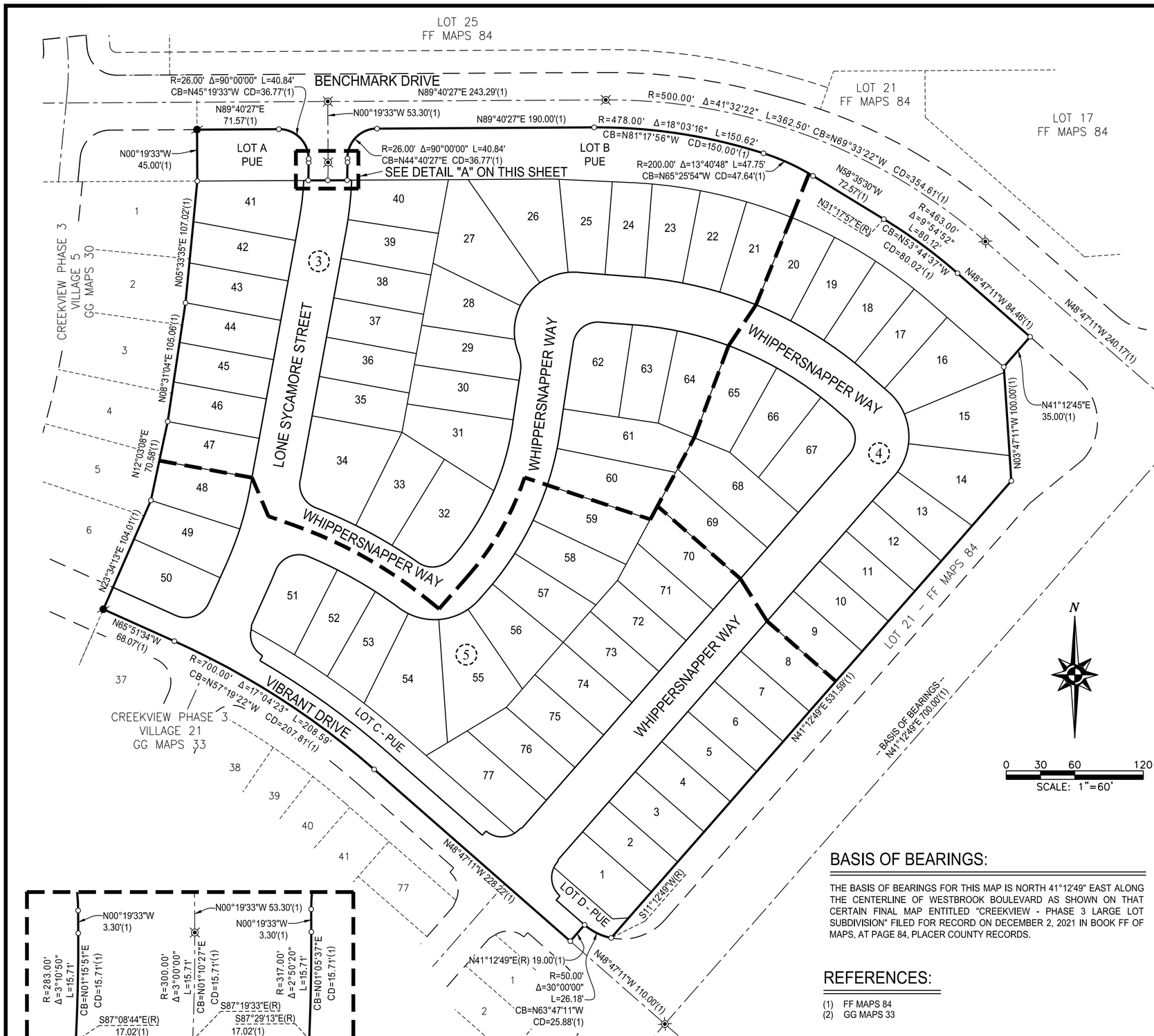

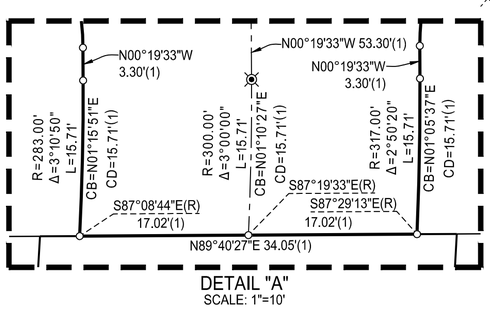

DETAIL "A"
SCALE: 1"=10'

NOTES

1. ALL CURVES ARE DIMENSIONED WITH RADIUS, DELTA, ARC LENGTH, CHORD BEARING AND CHORD LENGTH. DISTANCES SHOWN HEREON ARE IN FEET AND DECIMALS THEREOF AND ARE "GROUND" DISTANCES. DUE TO ROUNDING, THE SUM OF INDIVIDUAL DIMENSIONS MAY NOT EQUAL THE OVERALL DIMENSION.
2. TOTAL AREA FOR THIS SUBDIVISION IS 8.751± ACRES, CONSISTING OF 77 RESIDENTIAL LOTS AND 4 LANDSCAPE LOTS.
3. ALL FRONT LOT CORNERS WILL BE SET WITH A 1" DIAMETER BRASS DISC STAMPED "LS 8268" IN THE SIDEWALK ON THE EXTENSION OF SIDE LOT LINES 1.00 FOOT FROM THE FRONT PROPERTY LINE UNLESS OTHERWISE NOTED.
4. ALL REAR LOT CORNERS AND ANGLE POINTS WILL BE SET WITH A 5/8" REBAR WITH PLASTIC CAP STAMPED "LS 8268". WHERE MONUMENTS FALL WITHIN A SOUND WALL OR CONCRETE FOOTING A 5/8" REBAR WITH PLASTIC CAP STAMPED "LS 8268" WILL BE SET ON THE SIDE LOT LINE ON A 4.00 FOOT OFFSET TO THE REAR LOT CORNER OR A 3/4" DIAMETER BRASS TAG STAMPED "LS 8268" WILL BE SET WITH EPOXY TO THE FACE OF WALL 2.00 FOOT ABOVE GROUND OR ON TOP OF WALL WHERE AN OFFSET MONUMENT CANNOT BE SET.
5. PURSUANT TO GOVERNMENT CODE SECTION 66434(G), THE FOLLOWING EASEMENTS, NOT SHOWN HEREON, IS HEREBY ABANDONED:
   a. VARIABLE WIDTH AND 45' PUE/PE ALONG THE SOUTHERLY RIGHT-OF-WAY OF BENCHMARK DRIVE, WITHIN LOT 13 AS SHOWN ON THAT CERTAIN FINAL MAP ENTITLED "CREEKVIEW - PHASE 3 LARGE LOT SUBDIVISION", FILED FOR RECORD ON DECEMBER 2, 2021 IN BOOK FF OF MAPS, AT PAGE 84, PLACER COUNTY RECORDS.
   b. NORTHEASTERLY HALF OF 38' IOD DEDICATED FOR VIBRANT DRIVE WITHIN LOT 13 AS SHOWN ON THAT CERTAIN FINAL MAP ENTITLED "CREEKVIEW - PHASE 3 LARGE LOT SUBDIVISION", FILED FOR RECORD ON DECEMBER 2, 2021 IN BOOK FF OF MAPS, AT PAGE 84, PLACER COUNTY RECORDS.
5. A PRELIMINARY SOILS REPORT WAS PREPARED BY GEOCON CONSULTANTS, INC. DATED AUGUST, 2014; PROJECT NO. S9578-05-05 AND ON FILE WITH THE CITY OF ROSEVILLE DEVELOPMENT SERVICES - ENGINEERING DEPARTMENT, FILE NO. 308-885.

LEGEND:

⊗	COPPERWELD SURVEY MONUMENT WITH CENTER PUNCH IN MONUMENT WELL STAMPED "LS 9265" TO BE SET PER (1) OR (2)
●	5/8" REBAR WITH PLASTIC CAP STAMPED "LS 9265" TO BE SET PER (1)
⊗	SET COPPERWELD SURVEY MONUMENT WITH CENTER PUNCH IN MONUMENT WELL STAMPED "LS 8268"
○	DIMENSION POINT
CB	CHORD BEARING
CD	CHORD DISTANCE
IOD	IRREVOCABLE OFFER OF DEDICATION
(OA)	OVERALL
OR	OFFICIAL RECORDS OF PLACER COUNTY
PE	PEDESTRIAN EASEMENT
PUE	PUBLIC UTILITY EASEMENT
(R)	RADIAL BEARING
SF	SQUARE FEET
(X)	SHEET INDEX NUMBER
———	BOUNDARY
———	LOT LINE
- - - - -	ADJACENT PROPERTY
———	RIGHT-OF-WAY
— — —	EXISTING IOD/RIGHT-OF-WAY
- - - - -	EASEMENT
—— - ——	CENTER LINE

BASIS OF BEARINGS:

THE BASIS OF BEARINGS FOR THIS MAP IS NORTH 41°12'49" EAST ALONG THE CENTERLINE OF WESTBROOK BOULEVARD AS SHOWN ON THAT CERTAIN FINAL MAP ENTITLED "CREEKVIEW - PHASE 3 LARGE LOT SUBDIVISION" FILED FOR RECORD ON DECEMBER 2, 2021 IN BOOK FF OF MAPS, AT PAGE 84, PLACER COUNTY RECORDS.

REFERENCES:

(1) FF MAPS 84
(2) GG MAPS 33

FINAL MAP OF

CREEKVIEW PHASE 4 VILLAGE 20

SUBDIVISION NO. PL20-0201

LOT 13 AS SHOWN ON THAT CERTAIN FINAL MAP TITLED "CREEKVIEW - PHASE 3 LARGE LOT SUBDIVISION, SUBDIVISION NO. PL20-0201", FILED FOR RECORD ON DECEMBER 2, 2021, IN BOOK FF OF MAPS AT PAGE 84, PLACER COUNTY RECORDS, WITHIN SECTION 14, TOWNSHIP 11 NORTH, RANGE 5 EAST, MOUNT DIABLO MERIDIAN

CITY OF ROSEVILLE • PLACER COUNTY • CALIFORNIA

MACKAY & SOMPS
ENGINEERS PLANNERS SURVEYORS
1025 Creekside Ridge Drive, Suite 150, Roseville, CA 95678 (916) 773-1189

AUGUST 2024

 18431.CV.PH4.V20

BOOK ___ OF MAPS, PAGE ____

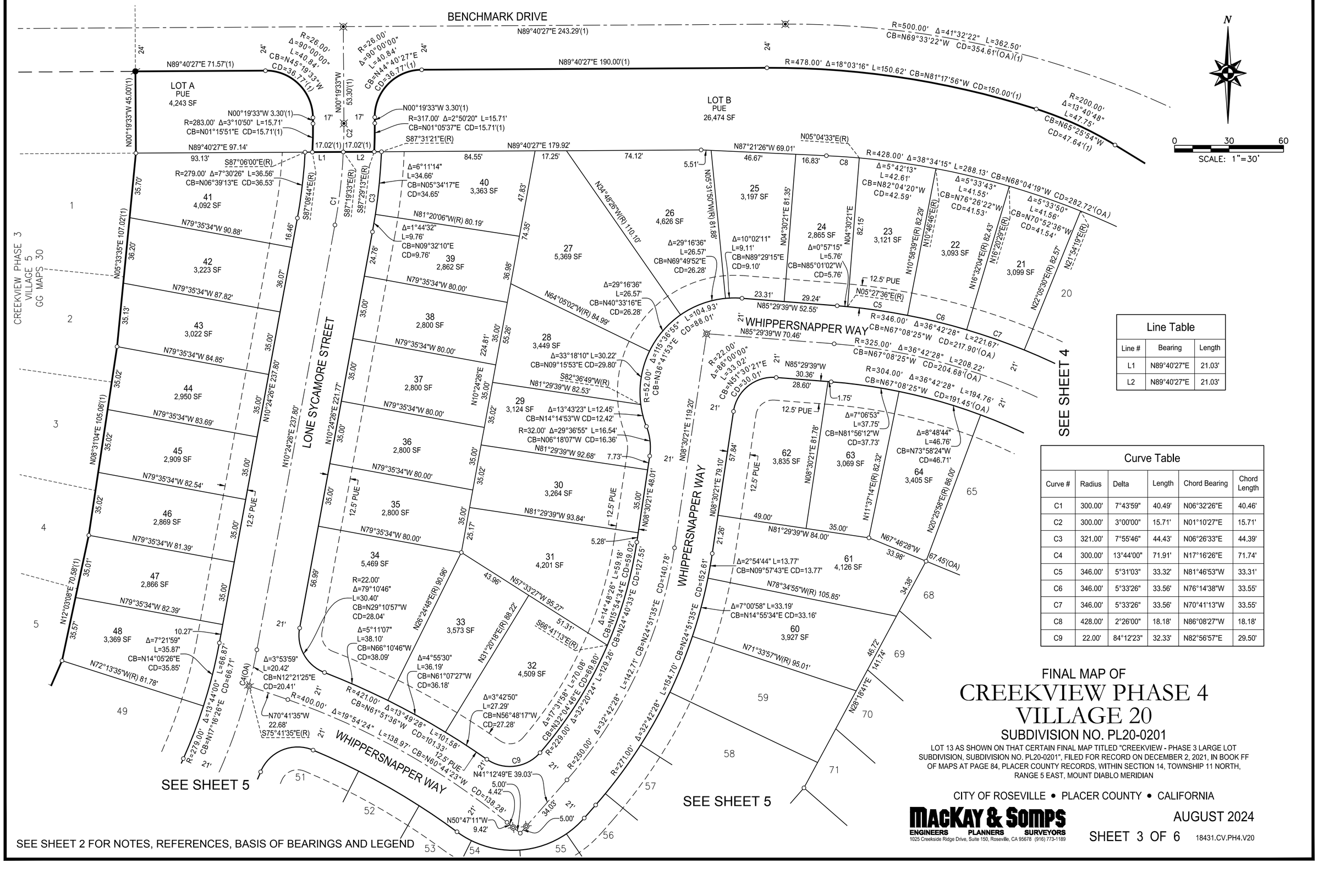

Line Table		
Line #	Bearing	Length
L1	N89°40'27"E	21.03'
L2	N89°40'27"E	21.03'

Curve Table					
Curve #	Radius	Delta	Length	Chord Bearing	Chord Length
C1	300.00'	7°43'59"	40.49'	N06°32'26"E	40.46'
C2	300.00'	3°00'00"	15.71'	N01°10'27"E	15.71'
C3	321.00'	7°55'46"	44.43'	N06°26'33"E	44.39'
C4	300.00'	13°44'00"	71.91'	N17°16'26"E	71.74'
C5	346.00'	5°31'03"	33.32'	N81°46'53"W	33.31'
C6	346.00'	5°33'26"	33.56'	N76°14'38"W	33.55'
C7	346.00'	5°33'26"	33.56'	N70°41'13"W	33.55'
C8	428.00'	2°26'00"	18.18'	N86°08'27"W	18.18'
C9	22.00'	84°12'23"	32.33'	N82°56'57"E	29.50'

FINAL MAP OF

CREEKVIEW PHASE 4
VILLAGE 20

SUBDIVISION NO. PL20-0201

LOT 13 AS SHOWN ON THAT CERTAIN FINAL MAP TITLED "CREEKVIEW - PHASE 3 LARGE LOT SUBDIVISION, SUBDIVISION NO. PL20-0201", FILED FOR RECORD ON DECEMBER 2, 2021, IN BOOK FF OF MAPS AT PAGE 84, PLACER COUNTY RECORDS, WITHIN SECTION 14, TOWNSHIP 11 NORTH, RANGE 5 EAST, MOUNT DIABLO MERIDIAN

CITY OF ROSEVILLE • PLACER COUNTY • CALIFORNIA

MACKAY & SOMPS
ENGINEERS PLANNERS SURVEYORS
1025 Creekside Ridge Drive, Suite 150, Roseville, CA 95678 (916) 773-1189

AUGUST 2024

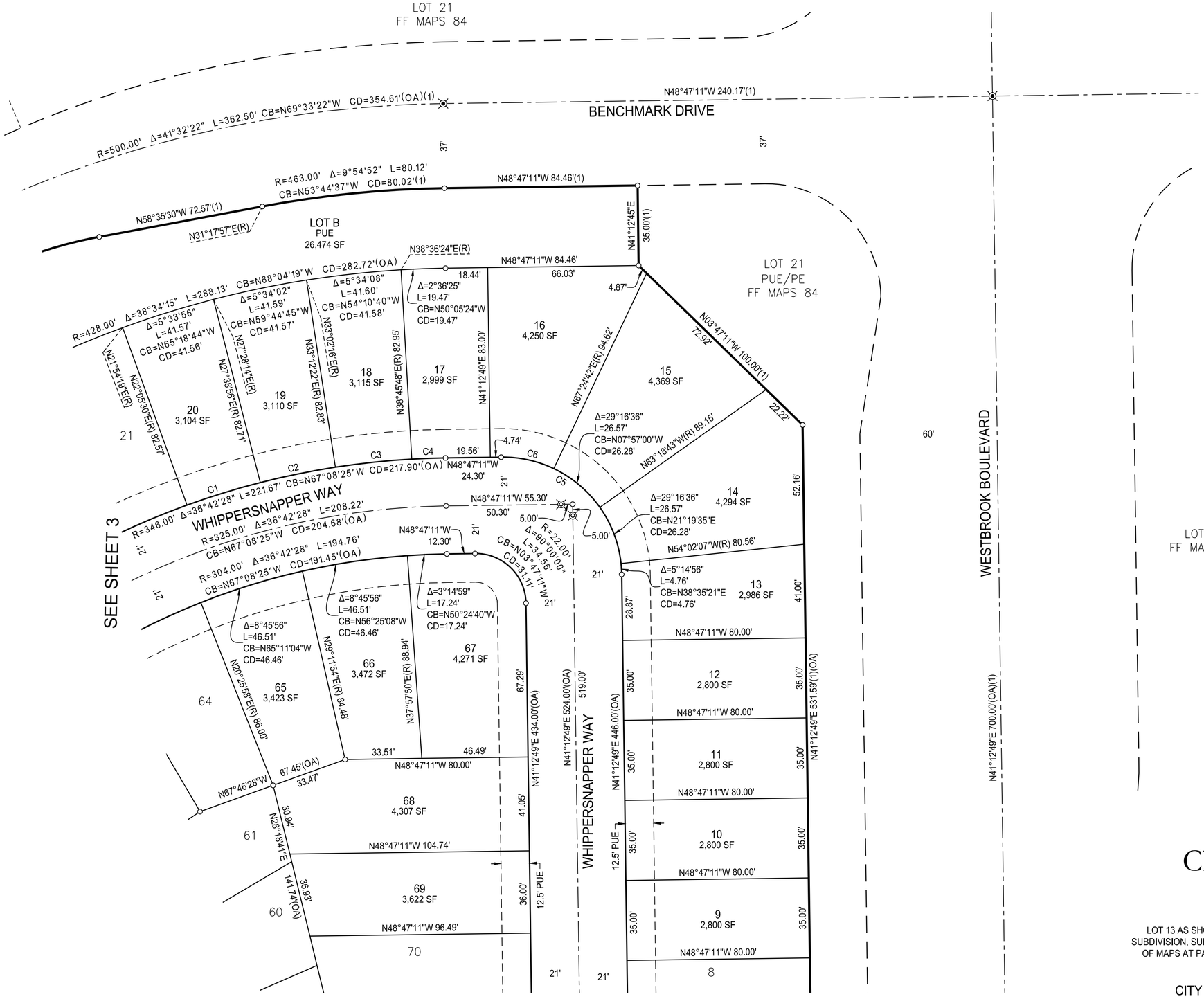

Curve Table					
Curve #	Radius	Delta	Length	Chord Bearing	Chord Length
C1	346.00'	5°33'26"	33.56'	N65°07'47"W	33.55'
C2	346.00'	5°33'26"	33.56'	N59°34'21"W	33.55'
C3	346.00'	5°33'26"	33.56'	N54°00'55"W	33.55'
C4	346.00'	2°27'01"	14.80'	N50°00'42"W	14.80'
C5	52.00'	90°00'00"	81.68'	N03°47'11"W	73.54'
C6	52.00'	26°11'53"	23.78'	N35°41'15"W	23.57'

FINAL MAP OF

CREEKVIEW PHASE 4
VILLAGE 20

SUBDIVISION NO. PL20-0201

LOT 13 AS SHOWN ON THAT CERTAIN FINAL MAP TITLED "CREEKVIEW - PHASE 3 LARGE LOT SUBDIVISION, SUBDIVISION NO. PL20-0201", FILED FOR RECORD ON DECEMBER 2, 2021, IN BOOK FF OF MAPS AT PAGE 84, PLACER COUNTY RECORDS, WITHIN SECTION 14, TOWNSHIP 11 NORTH, RANGE 5 EAST, MOUNT DIABLO MERIDIAN

CITY OF ROSEVILLE • PLACER COUNTY • CALIFORNIA

MACKAY & SOMPS
ENGINEERS PLANNERS SURVEYORS
1025 Creekside Ridge Drive, Suite 150, Roseville, CA 95678 (916) 773-1189

AUGUST 2024

 18431.CV.PH4.V20

SEE SHEET 2 FOR NOTES, REFERENCES, BASIS OF BEARINGS AND LEGEND

BOOK____ OF MAPS, PAGE____

Curve Table					
Curve #	Radius	Delta	Length	Chord Bearing	Chord Length
C1	21.00'	73°23'56"	26.90'	N12°05'13"W	25.10'
C2	21.00'	73°23'56"	26.90'	N85°29'09"W	25.10'
C3	52.00'	85°16'11"	77.39'	N83°50'54"E	70.44'
C4	52.00'	10°15'10"	9.31'	N58°38'35"W	9.29'
C5	379.00'	3°49'48"	25.33'	N55°25'54"W	25.33'
C6	379.00'	5°47'46"	38.34'	N60°14'41"W	38.32'
C7	379.00'	4°10'33"	27.62'	N65°13'51"W	27.62'
C8	739.00'	3°24'08"	43.88'	N59°43'11"W	43.88'
C9	21.00'	66°39'24"	24.43'	N26°31'45"W	23.08'
C10	300.00'	9°50'02"	51.49'	N19°13'26"E	51.43'
C11	279.00'	13°44'00"	66.87'	N17°16'26"E	66.71'

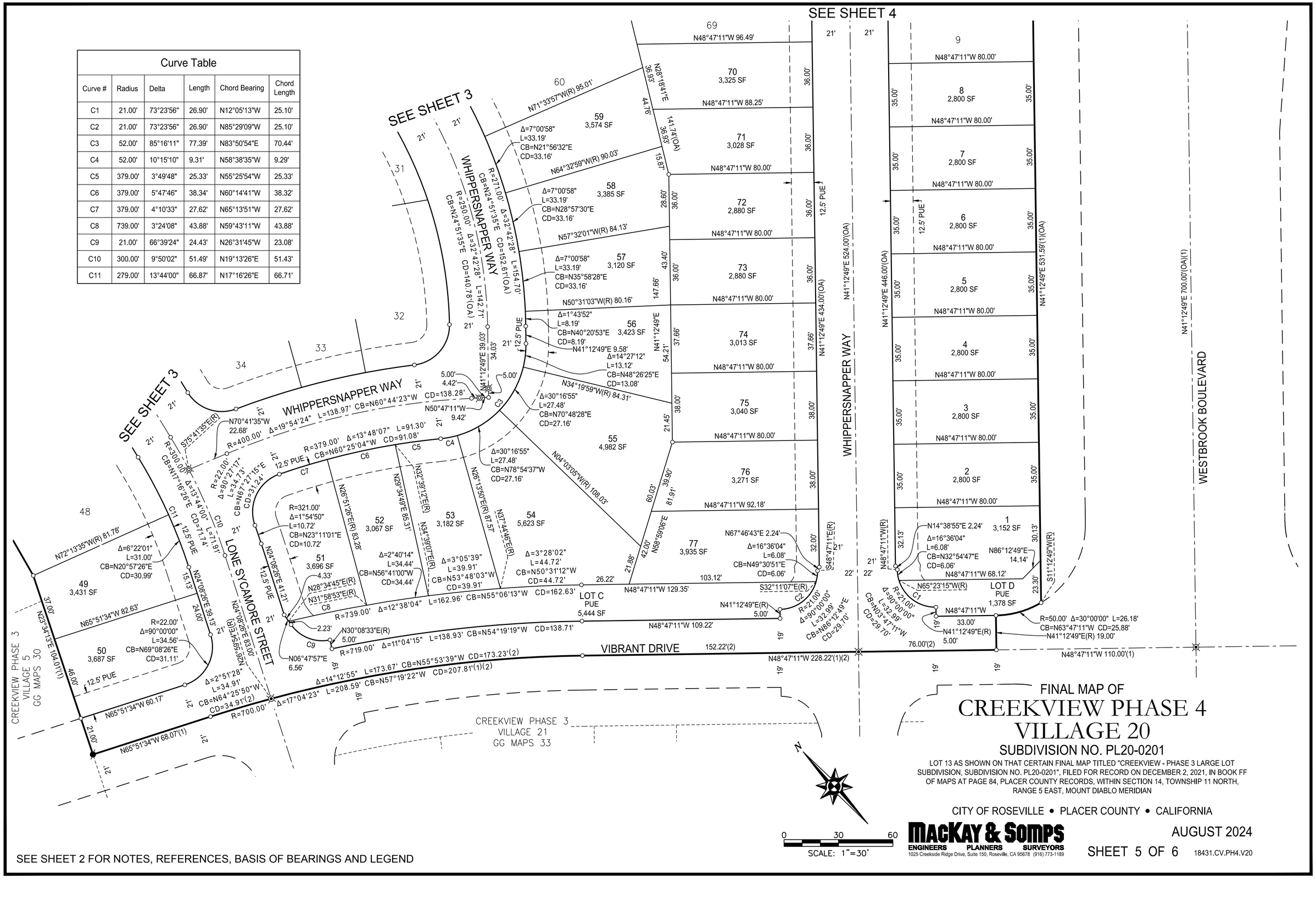

SEE SHEET 2 FOR NOTES, REFERENCES, BASIS OF BEARINGS AND LEGEND

0 30 60
SCALE: 1"=30'

FINAL MAP OF CREEKVIEW PHASE 4 VILLAGE 20

SUBDIVISION NO. PL20-0201

LOT 13 AS SHOWN ON THAT CERTAIN FINAL MAP TITLED "CREEKVIEW - PHASE 3 LARGE LOT SUBDIVISION, SUBDIVISION NO. PL20-0201", FILED FOR RECORD ON DECEMBER 2, 2021, IN BOOK FF OF MAPS AT PAGE 84, PLACER COUNTY RECORDS, WITHIN SECTION 14, TOWNSHIP 11 NORTH, RANGE 5 EAST, MOUNT DIABLO MERIDIAN

CITY OF ROSEVILLE • PLACER COUNTY • CALIFORNIA

MACKAY & SOMPS
ENGINEERS PLANNERS SURVEYORS
1025 Creekside Ridge Drive, Suite 150, Roseville, CA 95678 (916) 773-1189

AUGUST 2024

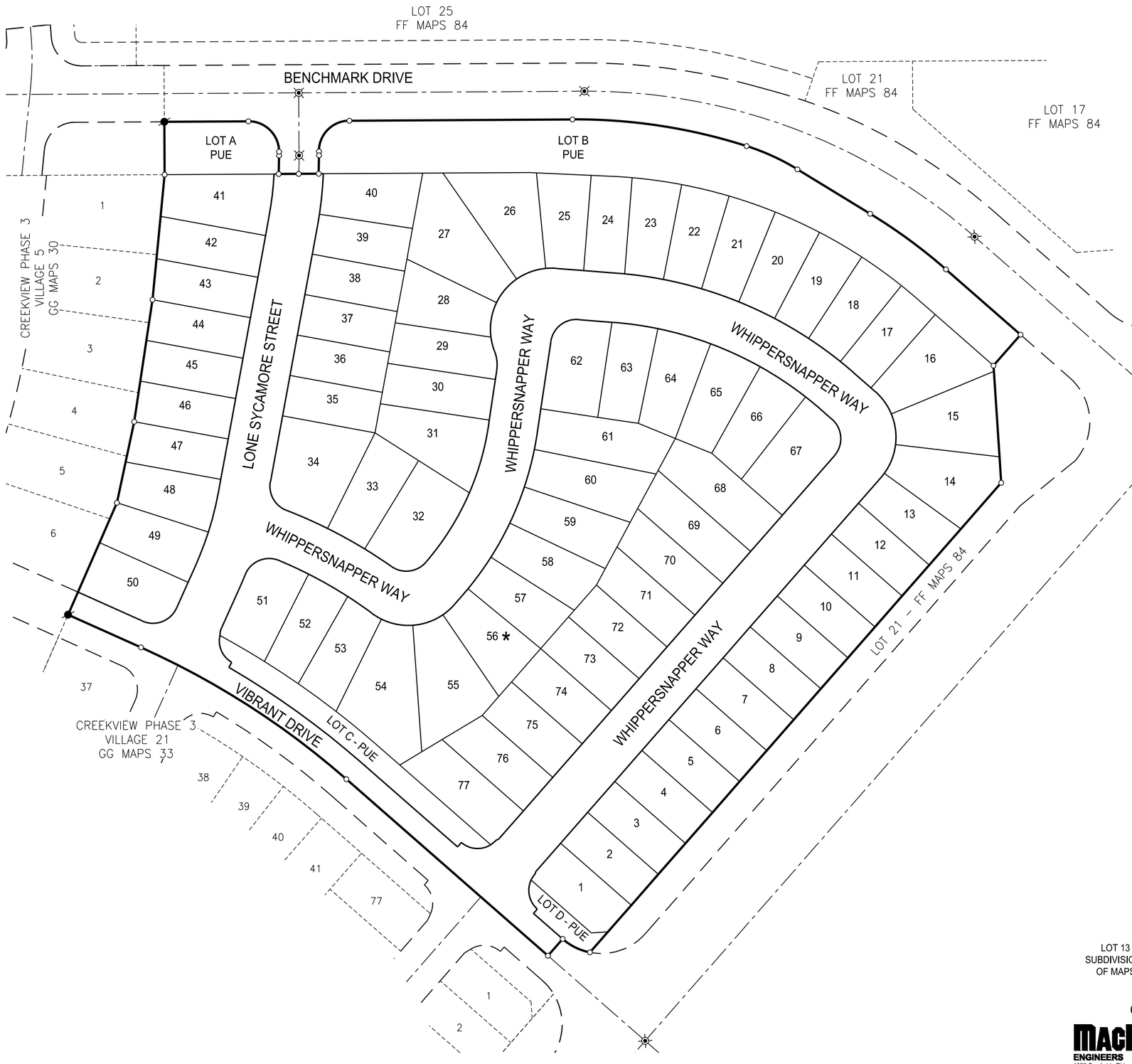

ADDITIONAL INFORMATION FOR INFORMATIONAL PURPOSES ONLY PURSUANT TO SECTION 66434.2 OF THE GOVERNMENT CODE

EACH RESIDENTIAL DWELLING CONSTRUCTED ON ANY OF THE LOTS INDICATED SHALL BE FITTED WITH A SEWER BACKFLOW PREVENTER VALVE AS APPROVED BY THE CITY OF ROSEVILLLE. IT SHALL BE THE RESPONSIBILITY OF THE OWNER OF SAID DWELLING TO MAINTAIN THE VALVE AND PREVENT DAMAGE FROM OCCURRING THERETO. THE CITY OF ROSEVILLE SHALL NOT BE RESPONSIBLE FOR THE MAINTENANCE OR PERFORMANCE OF THE VALVE, AND THE CITY OF ROSEVILLE SHALL NOT BE LIABLE FOR ANY DAMAGE OCCURRING TO ANY SUCH DWELLING OR ITS CONTENTS DUE TO FAILURE OF THE VALVE FOR ANY REASON WHATSOEVER.

LEGEND

* DENOTES SEWER BACKFLOW PREVENTER VALVE REQUIRED ON SANITARY SEWER CONNECTION BY THE CITY OF ROSEVILLE WITH THE BUILDING PERMIT AND MAINTAINED THEREAFTER BY THE OWNER.

N

0 30 60 120

SCALE: 1"=60'

FINAL MAP OF

CREEKVIEW PHASE 4
VILLAGE 20

SUBDIVISION NO. PL20-0201

LOT 13 AS SHOWN ON THAT CERTAIN FINAL MAP TITLED "CREEKVIEW - PHASE 3 LARGE LOT SUBDIVISION, SUBDIVISION NO. PL20-0201", FILED FOR RECORD ON DECEMBER 2, 2021, IN BOOK FF OF MAPS AT PAGE 84, PLACER COUNTY RECORDS, WITHIN SECTION 14, TOWNSHIP 11 NORTH, RANGE 5 EAST, MOUNT DIABLO MERIDIAN

CITY OF ROSEVILLE • PLACER COUNTY • CALIFORNIA

MACKAY & SOMPS
ENGINEERS PLANNERS SURVEYORS
1025 Creekside Ridge Drive, Suite 150, Roseville, CA 95678 (916) 773-1189

AUGUST 2024

18431.CV.PH4.V20

RESOLUTION NO. 24-285

APPROVING A SUBDIVISION AGREEMENT, BY AND BETWEEN THE CITY OF ROSEVILLE AND ANTHEM UNITED CREEKVIEW DEVELOPMENTS LIMITED PARTNERSHIP, AND AUTHORIZING THE CITY MANAGER TO EXECUTE IT ON BEHALF OF THE CITY OF ROSEVILLE

WHEREAS, a subdivision agreement, by and between the City of Roseville and Anthem United Creekview Developments Limited Partnership, for the Creekview Phase 4 - Village 20 Subdivision, has been reviewed by the City Council; and

NOW, THEREFORE, BE IT RESOLVED by the Council of the City of Roseville that said agreement is approved and the City Manager is authorized to execute it on behalf of the City of Roseville.

PASSED AND ADOPTED by the Council of the City of Roseville this____day of _____, 2024, by the following vote on roll call:

AYES COUNCILMEMBERS:

NOES COUNCILMEMBERS:

ABSENT COUNCILMEMBERS:

_____
MAYOR

ATTEST:

_____
City Clerk

RECORDING REQUESTED BY AND WHEN RECORDED, PLEASE RETURN TO:

City Clerk
CITY OF ROSEVILLE
311 Vernon Street
Roseville, CA 95678

Exempt from recording fees
Pursuant to Govt. Code §27383

SUBDIVISION AGREEMENT

Creekview Phase 4 - Village 20 SUBDIVISION

THIS AGREEMENT, made and entered into this ___ day of _____, 20__, by and between the CITY OF ROSEVILLE, a municipal corporation ("CITY"), and Anthem United Creekview Developments Limited Partnership, a Washington Limited Partnership, ("SUBDIVIDER"),

W I T N E S S E T H:

WHEREAS, SUBDIVIDER is possessed of a tract of land lying in the City of Roseville, County of Placer, known as "Creekview Phase 4 Village 20 Subdivision" (Subdivision no. PL20-0210; "the Subdivision"); and

WHEREAS, a tentative map of the Subdivision was approved by the City Planning Commission on the 22nd day of July, 2021, and the final map of the Subdivision has been approved subject to the execution of this Agreement; and

WHEREAS, the final map has been filed on the ____ day of _____, 20__ in Book _____ of Parcel/Subdivision Maps at Page _____ in the Official Records, Placer County Recorder, file no. _____; and

WHEREAS, Section 18.20.110 of the Roseville Municipal Code, regulating the subdivision of land in the City, requires that SUBDIVIDER shall execute and file an agreement between itself and CITY relating to the improvements to be made in a subdivision, prior to the approval by the City Council of the final map.

NOW, THEREFORE, the parties agree as follows:

1. Rights-of-Way. Except as otherwise provided by this Agreement, CITY rejects all lands, right-of-ways, and easements offered for dedication on the final map of the Subdivision. All such offers shall, however, remain open, and shall constitute irrevocable offers of dedication in accordance with Government Code Section 66477.2. All such offers may be accepted by CITY in its sole discretion at any later date without further notice to SUBDIVIDER as provided by law.

By way of explanation only, it is the current intention of CITY to accept all or part of such irrevocable offers to dedicate upon acceptance of the improvements called for in this Agreement.

2. Improvements - Time Limit. SUBDIVIDER agrees to cause all improvements to be made and constructed in the Subdivision to fully comply with the requirements of the Roseville Municipal Code and the Subdivision Map Act of the State of California according to the improvement plans for the Subdivision prepared by MacKay & Somps, dated December 7, 2023 and approved by the City Engineer and including any changes or

alterations to such improvements required by the City Engineer, and to install, on or before December 31, 2025, such survey monuments as may be required by the City Engineer ("the Work"). SUBDIVIDER agrees to pay for any materials, provisions or other supplies used in, upon, for or about the performance of the Work, or for any work or labor of any kind done in connection with the Work, or for any amounts due under the Unemployment Insurance Act with respect to such work or labor.

SUBDIVIDER agrees to complete all of the Work on or before twenty-four (24) months from the date of this Agreement. If in the opinion of the City Engineer of CITY, an extension of this Agreement is not detrimental to the public welfare, he or she is, in his or her sole discretion, hereby authorized to extend the time within which the Work shall be completed for a period not to exceed twelve (12) months. Upon a written application made by SUBDIVIDER, further extensions, not to exceed an additional six (6) months, shall be reviewed and approved at the discretion of the City Engineer of CITY. Any such application extension request by SUBDIVIDER shall fully state the grounds and facts relied upon for the granting of additional extensions.

In the event that SUBDIVIDER shall fail to complete the Work within the time provided by this Agreement, CITY may, in its sole discretion and in addition to any other remedy provided in this Agreement or by law, enter upon the Subdivision and complete the Work and recover the full cost and expense of such construction from SUBDIVIDER, SUBDIVIDER's successors and assigns, or from the then owner of the Subdivision, and/or place a lien upon the Subdivision for such cost and expense.

If at anytime prior to the expiration of the time provided by this Agreement the City Engineer of CITY determines that a safety hazard exists within an existing public right-of-

way, the City Engineer shall give written notice to SUBDIVIDER to eliminate the safety hazard. If SUBDIVIDER fails to eliminate the safety hazard within five (5) calendar days of the written notice, CITY may, in its sole discretion and in addition to any other remedy provided in this Agreement or by law, eliminate the safety hazard and recover the full cost and expense of such work from SUBDIVIDER, SUBDIVIDER's successors and assigns, or from the then owner of the Subdivision, and/or place a lien upon the Subdivision for such cost and expense.

3. Acquisition and Dedication of Easements or Rights-of-Ways. If any of the Work is to be constructed or installed on land not within the Subdivision or already existing public right-of-way, no construction or installation shall be commenced before:

a. The irrevocable offer of dedication or conveyance to CITY of appropriate right-of-ways, easements or other interest in real property, and appropriate authorization from the property owner to allow construction or installation of the improvements or work; or

b. The issuance of an order of possession by a court of competent jurisdiction pursuant to the State Eminent Domain Law. SUBDIVIDER shall comply in all respects with any such order of possession.

Nothing in this Section 3 shall be construed as authorizing or granting an extension of time to SUBDIVIDER for completion of the Work.

4. Inspection Fees and Costs. The City Engineer shall inspect all of the Work improvements made in the Subdivision to see that they comply with CITY's subdivision regulations and specifications. SUBDIVIDER shall deposit the estimated inspection fee and reimburse CITY for the cost of such inspections in accordance with Roseville Municipal Code section 18.20.070.

5. Securities.

a. SUBDIVIDER shall file with this Agreement two (2) improvement securities as set forth in Roseville Municipal Code Sections 18.20.150 and 18.20.160. Each security shall be in the amount of one hundred percent (100%) of the total estimated cost of the Work as determined by the City Engineer which amount is the sum of $ 1,428,949.00 . One improvement security shall secure faithful performance of this Agreement as required by Section 66499.3(a) of the Government Code of the State of California (the "faithful performance" security). The second improvement security shall, as required by Section 66499.3(b) of the Government Code of the State of California, secure the obligations set forth in Title 1 (commencing with Section 8000) of Part 6 of Division 4 of the Civil Code of the State of California for payment to the contractor, his subcontractors and to persons renting equipment or furnishing labor or materials to them for the Work (the "payment security"). The improvement securities required under this paragraph shall also secure placement of monumentation and guarantee payment therefor as provided by California Government Code section 66496.

b. SUBDIVIDER shall also file with this Agreement a "guarantee and warranty security" in the amount of ten percent (10%) of the City Engineer's estimated cost of the Work as set forth in Section 18.20.170 of the Roseville Municipal Code to guarantee and warrant the Work for a period of one year following its completion and acceptance against any defective work or labor done, or defective materials furnished, as required by Section 66499(a)(5) of the Government Code of the State of California. The guarantee and warranty security shall be released upon SUBDIVIDER's request following expiration of the warranty period and subject to the reasonable determination of the City Engineer that SUBDIVIDER's warranty obligations have been satisfied.

c. Any bonds submitted as security pursuant to this section shall be executed by a surety company authorized to transact a surety business in the State of California. All required securities shall be in a form approved by the City Attorney of CITY.

6. Successors and Assigns – Covenant Running with the Land. This Agreement shall inure to the benefit of, and be binding upon, the successors and assigns of the respective parties. It shall be recorded in the Office of the Recorder of Placer County concurrently with the final map of the Subdivision, and shall constitute a covenant running with the land and an equitable servitude upon the real property within the Subdivision.

7. Acceptance of Improvements Upon Completion. Upon satisfactory completion of the Work, in accordance with this Agreement, CITY agrees to accept the Work and its improvements and the offers of dedication described in paragraph 1, subject to the provisions of paragraphs 1 and 10 of this Agreement.

8. Notice Regarding Construction. SUBDIVIDER shall notify the City Engineer of CITY in writing three (3) days prior to the commencement of construction of the Work.

9. Subdivider's Obligation to Warn Public During Construction. Until final acceptance of the Work, SUBDIVIDER shall give good and adequate warning to the public of each and every dangerous condition which may exist in the Work, and will take all reasonable actions to protect the public from any such dangerous condition.

10. Warranty.

a. SUBDIVIDER guarantees and warrants the public improvements which constitute the Work required by this Agreement, and agrees to remedy any defects in the improvements or the Work arising from faulty or defective materials or construction of said improvements or the Work occurring within twelve (12) months after their acceptance by CITY.

SUBDIVIDER agrees to permit inspection of all improvements in the Subdivision by the City Engineer of CITY for such period, and to reimburse CITY for the cost of such inspections.

b. If, within the warranty period, the Work or improvement or any part of the Work done, furnished, installed, or constructed fails to fulfill any of the requirements of this Agreement or the improvement plans and specifications, SUBDIVIDER shall, without delay or cost to CITY, repair, replace or reconstruct any defective or otherwise unsatisfactory part or parts of the Work. CITY may, at its sole option, perform such repair or replacement itself if SUBDIVIDER has failed to commence such repair within twenty (20) days after CITY has mailed written notice of default to SUBDIVIDER and to SUBDIVIDER'S Surety. In such event, SUBDIVIDER agrees to pay the cost of such repair and replacement by CITY and CITY may, at its option, recover such cost as a lien against the Subdivision should the cost exceed the inspection fee deposited pursuant to paragraph 4 of this Agreement.

Should CITY determine that the public safety requires repairs or replacements to be made before SUBDIVIDER can be notified, CITY may, in its sole discretion, make the necessary repairs or replacement or perform the necessary work. SUBDIVIDER shall pay to CITY the cost of such repairs and CITY may at its option recover such cost as a lien against the Subdivision.

11. Indemnification. To the fullest extent allowed by law, SUBDIVIDER shall defend, indemnify, and save and hold harmless CITY, its officers, agents, employees and volunteers from any claims, suits or actions of every name, kind and description brought forth, or on account of, injuries to or death of any person (including but not limited to workers and the public), or damage to property, resulting from or arising out of SUBDIVIDER 's willful misconduct or negligent act or omission while engaged in the performance of obligations or

exercise of rights created by this Agreement, except those matters arising from CITY's sole or active negligence or willful misconduct. The parties intend that this provision shall be broadly construed.

SUBDIVIDER's responsibility for such defense and indemnity obligations shall survive the termination or completion of this Agreement for the full period of time allowed by law. The defense and indemnity obligations of this Agreement are undertaken in addition to, and shall not in any way be limited by, the insurance obligations contained in this Agreement.

12. Insurance. SUBDIVIDER agrees to continuously maintain, in full force and effect, at a minimum the following policies of insurance during the term of this Agreement.

COVERAGE	LIMITS OF LIABILITY
General Liability	$2,000,000 per occurrence $4,000,000 aggregate Personal Injury: $2,000,000 per occurrence $4,000,000 aggregate
Automobile Liability	$1,000,000 combined single limit
Workers' Compensation	Statutory

a. Form. SUBDIVIDER shall submit a certificate evidencing such coverage for the period covered by this Agreement in a form satisfactory to Risk Management and the City Attorney, prior to undertaking any work hereunder. Any insurance written on a claims made basis is subject to the approval of Risk Management and the City Attorney.

b. Additional Insureds. SUBDIVIDER shall also provide a separate endorsement form or section of the policy showing CITY, its officers, agents, employees and volunteers as additional insureds for each type of coverage, except for Workers' Compensation, for ongoing and completed operations. Such insurance shall specifically cover the contractual

liability of SUBDIVIDER. The additional insured coverage under the SUBDIVIDER's policy shall be primary and noncontributory, as evidenced by a separate endorsement or section of the policy, and shall not seek contribution from CITY's insurance or self-insurance. In addition, the additional insured coverage shall be at least as broad as the Insurance Services Office ("ISO") CG 20 01 Endorsement. Any available insurance proceeds in excess of the specified minimum insurance coverage requirements and limits shall be available to the additional insureds. Furthermore, the requirements for coverage and limits shall be: (1) the minimum coverage and limits specified in this Agreement; or (2) the full coverage and maximum limits of any insurance proceeds available to the named insureds, whichever is greater.

c. Cancellation/Modification. SUBDIVIDER shall provide ten (10) days written notice to CITY prior to cancellation or modification of any insurance required by this Agreement.

d. Umbrella/Excess Insurance. The limits of insurance required in this Agreement may be satisfied by a combination of primary and excess insurance. Any excess insurance shall contain or be endorsed to contain a provision that such coverage shall also apply on a primary and noncontributory basis for the benefit of CITY (if agreed to in a written contract) before CITY's own insurance shall be called upon to protect it as a named insured.

e. Self-Insured Retentions. All self-insured retentions ("SIR") must be disclosed to Risk Management for approval and shall not reduce the limits of liability. Policies containing any SIR provision shall provide or be endorsed to provide that the SIR may be satisfied by either the named insured or CITY. CITY reserves the right to obtain a full certified copy of any insurance policy and endorsements. The failure to exercise this right shall not constitute a waiver of such right.

f. Waiver of Subrogation. SUBDIVIDER hereby agrees to waive subrogation which any insurer of SUBDIVIDER may acquire from SUBDIVIDER by virtue of the payment of any loss under a Workers Compensation, Commercial General Liability or Automobile Liability policy. All Workers Compensation, Commercial General Liability and Automobile Liability policies shall be endorsed with a waiver of subrogation in favor of CITY, its officers, agents, employees and volunteers for all worked performed by SUBDIVIDER, its employees, agents and subcontractors.

g. Liability/Remedies. Insurance coverage in the minimum amounts set forth herein shall not be construed to relieve SUBDIVIDER of liability in excess of such coverage, nor shall it preclude CITY from taking such other actions as are available to it under any other provisions of this Agreement or law.

13. Irrevocability of Security. The improvement securities furnished pursuant to paragraph 5 shall be irrevocable, shall not be limited as to time (except as to the one-year guarantee and warranty period specified in paragraph 10) and shall provide that they may be released, in whole or part, only upon the written approval of the City Engineer of CITY.

14. Attorney's Fees; Venue; Governing Law. Any action by any party to this Agreement, or any action concerning a security furnished pursuant to paragraph 5, shall be brought in the appropriate court of competent jurisdiction within the County of Placer, State of California, notwithstanding any other provision of law which may provide that such action may be brought in some other location. In the event it becomes necessary for either party to bring an action with respect to enforcement of the provisions of this Agreement, or the security therefor, the prevailing party in such action shall be awarded a reasonable attorney's fee, as may be

determined by the Court. This Agreement shall be governed by and construed in accordance with the laws of the State of California.

15. Release of Faithful Performance Security. Release of faithful performance security shall be in compliance with and pursuant to the procedures set forth in Government Code Section 66499.7. Upon the completion of all secured Work by SUBDIVIDER and written acceptance of that completed Work by CITY, and the furnishing of the warranty security as required by paragraph 5(b), the City Engineer shall authorize the release of the remaining faithful performance security.

16. Release of Payment Security. Thirty-five (35) days after a notice of completion is recorded with respect to the Work, the City Engineer of CITY may authorize the release of the payment security, in the event that no claims have been filed against said security. In the event that claims or actions are filed against the security, the City Engineer may release so much of such security as is in excess of the total of the claims made against it, plus a reasonable amount of costs and attorney's fees.

17. Automatic Termination Upon Completion and Sale of Residential Unit. This Agreement and any lien pursuant hereto shall automatically be terminated, without any further action by either party or need to record any additional document, with respect to any single-family residential lot within a parcel designated by the Specific Plan for residential use, upon completion of construction and issuance by the City of a final inspection for a dwelling unit upon such residential lot and conveyance of such improved residential lot to a bona-fide good faith purchaser thereof. In connection with its issuance of a final inspection for such improved lot, City shall confirm that: (i) all improvements which are required to serve the lot, as determined by City, have been accepted by City; (ii) the lot is included within the Maintenance CFD as required

by the applicable Development Agreement or other financing mechanism acceptable to the City, to the extent required hereby; and (iii) if and to the extent applicable to such lot, an affordable purchase or rental housing agreement has been recorded on the lot. Termination of this Agreement for any such residential lot as provided for in this section shall not in any way be construed to terminate or modify any assessment district or Mello-Roos Community Facilities District lien affecting such lot at the time of termination.

18. Failure of Performance. In addition to any other remedies provided in this Agreement or by law, in the event SUBDIVIDER fails to perform one or more of the covenants or conditions of this Agreement, CITY shall have recourse to the security given to guarantee the performance of such acts. CITY may do, or cause to be done, those acts required of SUBDIVIDER, and shall have recourse against so much of the security as is necessary to discharge the responsibility of SUBDIVIDER. In the event CITY seeks recourse against a security, CITY shall also have recourse against SUBDIVIDER for any and all amounts necessary to complete the obligations of SUBDIVIDER in the event the security is insufficient to pay such amounts. All administrative costs, including reasonable attorney's fees pursuant to Section 66499.4 of the Government Code, incurred by CITY, in addition to the costs of the improvements, shall be a proper charge against the security and SUBDIVIDER.

19. Integration. This Agreement is an integrated agreement. It supersedes all prior negotiations, representations, or agreements, either written or oral.

20. Modification. This Agreement and each provision contained herein may be waived, amended, supplemented or eliminated only by mutual written agreement of the parties.

21. Notices. Any notices sent to the parties relating to this Agreement shall be sent by first class mail, postage prepaid or delivered to the following addresses:

Marc Stout, City Engineer
City of Roseville
311 Vernon Street
Roseville, CA 95678

Anthem Properties
Jason Gray, Vice President Land Development & Entitlements
3001 Douglas Boulevard, Ste. 200
Roseville CA 95661

Either party may amend its address by giving written notice to the other.

22. Severability. If any of the provisions contained in this Agreement are for any reason held invalid or unenforceable, such holding shall not affect the remaining provisions or the validity and enforceability of the Agreement as a whole.

IN WITNESS WHEREOF, the City of Roseville, a municipal corporation, has authorized the execution of this Agreement in duplicate by its City Manager and attestation by its City Clerk under authority of Resolution No. ____, adopted by the Council of the City of Roseville on the ___ day of _____, 20__, and SUBDIVIDER has caused this Agreement to be executed.

CITY OF ROSEVILLE, a
municipal corporation,

BY: _____
DOMINICK CASEY
City Manager

ATTEST:

BY: _____
CARMEN AVALOS
City Clerk

Anthem United Creekview Developments Limited Partnership,
a Washington Limited Partnership

BY: _____
Print name: Brian Moore
Title: Vice President

and

BY: _____
Print name: Matt Gustus
Title: Vice President

(NOTARIZATION REQUIRED)

[B:\City Attorney\agreement\form agreements\subdivision agmt.docx; 6/6/2023]

APPROVED AS TO FORM:

BY:_____
MICHELLE SHEIDENBERGER
City Attorney

APPROVED AS TO SUFFICIENCY:

BY:
MARC STOUT
City Engineer

CALIFORNIA CERTIFICATE OF ACKNOWLEDGMENT

A notary public or other officer completing this certificate verifies only the identity of the individual who signed the document to which this certificate is attached, and not the truthfulness, accuracy, or validity of that document.

State of California)

County of Placer)

On 1/2/24 before me, Terri Susan Sublett, Notary Public
(here insert name and title of the officer)

personally appeared Brian Moore & Matt Gustus

,

who proved to me on the basis of satisfactory evidence to be the person(s) whose name(s) is/are subscribed to the within instrument and acknowledged to me that he/she/they executed the same in his/her/their authorized capacity(ies), and that by his/her/their signature(s) on the instrument the person(s), or the entity upon behalf of which the person(s) acted, executed the instrument.

I certify under PENALTY OF PERJURY under the laws of the State of California that the foregoing paragraph is true and correct.

WITNESS my hand and official seal.

TERRI SUSAN SUBLETT
COMM. #2431193
Notary Public - California
Placer County
My Comm. Expires Dec. 16, 2026
NRO1 NRO1

Signature Terri Susan Sublett

(Seal)

Optional Information

Although the information in this section is not required by law, it could prevent fraudulent removal and reattachment of this acknowledgment to an unauthorized document and may prove useful to persons relying on the attached document.

Description of Attached Document

The preceding Certificate of Acknowledgment is attached to a document titled/for the purpose of Subdivision Improvement Agreement Creek Views PH4 - Village 20,

containing 14 pages, and dated N/A .

The signer(s) capacity or authority is/are as:

- ☐ Individual(s)
- ☐ Attorney-in-Fact
- ☑ Corporate Officer(s) Vice Presidents
  Title(s)
- ☐ Guardian/Conservator
- ☐ Partner - Limited/General
- ☐ Trustee(s)
- ☐ Other: _____

representing: _____
Name(s) of Person(s) or Entity(ies) Signer is Representing

Additional Information

Method of Signer Identification

Proved to me on the basis of satisfactory evidence:
○ form(s) of identification ○ credible witness(es)

Notarial event is detailed in notary journal on:
Page # _____ Entry # _____

Notary contact: _____

Other

☐ Additional Signer(s) ☐ Signer(s) Thumbprint(s)

☐ _____

© Copyright 2007-2021 Notary Rotary, PO Box 41400, Des Moines, IA 50311-0507. All Rights Reserved. Item Number 101772. Please contact your Authorized Reseller to purchase copies of this form.

COUNCIL COMMUNICATION

CC #: 3485
File #: 0400-04-13-1 & 0400-07

Title:	Creekview Phase 4 Village 6 and Creekview Phase 4 Village 8 Subdivisions - Final Maps and Subdivision Agreement
Contact:	Edward Winston 916-774-5432 ewinston@roseville.ca.us

Meeting Date: 8/21/2024
Item #: 7.9.

RECOMMENDATION TO COUNCIL

It is recommended that the City Council take the following actions:

1. Approve the Creekview Phase 4 Village 6 final map on file with the City Clerk and accept, on behalf of the public, the public utility easements offered thereon and accept, subject to improvement, Lots A, B, and C, and the rights of way offered thereon; and approve the abandonment of the easements as listed thereon; and

2. Approve the Creekview Phase 4 Village 8 final map on file with the City Clerk and accept, on behalf of the public, the public utility easements and storm drainage easement offered thereon and accept, subject to improvement, Lot A, and the rights of way offered thereon; and approve the abandonment of the easements as listed thereon; and

3. Adopt the attached resolution approving the Subdivision Agreement and authorizing the City Manager to execute the agreement on behalf of the City.

BACKGROUND

The Development Services Department, Engineering Division, has reviewed the Creekview Phase 4 Village 6 final map and found that it is in compliance with the Subdivision Map Act and the City's Subdivision Ordinance and all conditions of the tentative map have been met. This map will create 48 residential lots and 3 public landscape lots.

The Development Services Department, Engineering Division, has also reviewed the Creekview Phase 4 Village 8 final map and found that it is in compliance with the Subdivision Map Act and the City's Subdivision Ordinance and all conditions of the tentative map have been met. This map will create 32 residential lots and 1 public landscape lot.

Creekview Phase 4 Villages 6 and 8 are being constructed concurrently with one improvement plan set, however each Village Final Map will be approved and recorded separately. In order to

ensure that all of the developer's improvement plan obligations are fulfilled, the improvements for both Villages will be secured under a single subdivision agreement.

FISCAL IMPACT

There is no fiscal impact to the City's General Fund associated with this approval.

ENVIRONMENTAL REVIEW

Development of the Creekview Phase 4 Village 6 and Creekview Phase 4 Village 8 projects were previously evaluated in the Creekview Specific Plan EIR (certified September 19, 2012 SCH No. 2008032017), and identified in the associated Creekview Specific Plan. Construction of the Creekview Phase 4 Village 6 and the Creekview Phase 4 Village 8 projects are found to be within the scope of the project covered by the Creekview Specific Plan EIR, and are therefore exempt from CEQA pursuant to Section 15182. As discussed in the Specific Plan EIR, the EIR provides environmental analyses of community infrastructure and facilities, including residential subdivisions. Because the projects are consistent with the Creekview Specific Plan EIR and Specific Plan, no new effects would be expected to occur and all applicable mitigation measures from the Creekview Specific Plan EIR will be implemented during the design and construction of the Creekview Phase 4 Village 6 and the Creekview Phase 4 Village 8 projects. Because the proposed projects meet the requirements identified in the State CEQA Guidelines Section 15183, no additional CEQA review is required.

CITY COUNCIL STRATEGIC PLAN/OVERARCHING GOALS

Goal F - Invest in well-planned infrastructure and growth

Respectfully Submitted,

Edward Winston, Associate Engineer

Mike Isom, Development Services Director

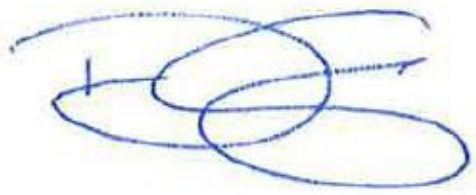

_____

Dominick Casey, City Manager

ATTACHMENTS:

Description

Vicinity Map - Village 6

Vicinity Map - Village 8

Final Map - Village 6

Final Map - Village 8

Resolution 24-286

Subdivision Agreement

CREEKVIEW PHASE 4 VILLAGE 6

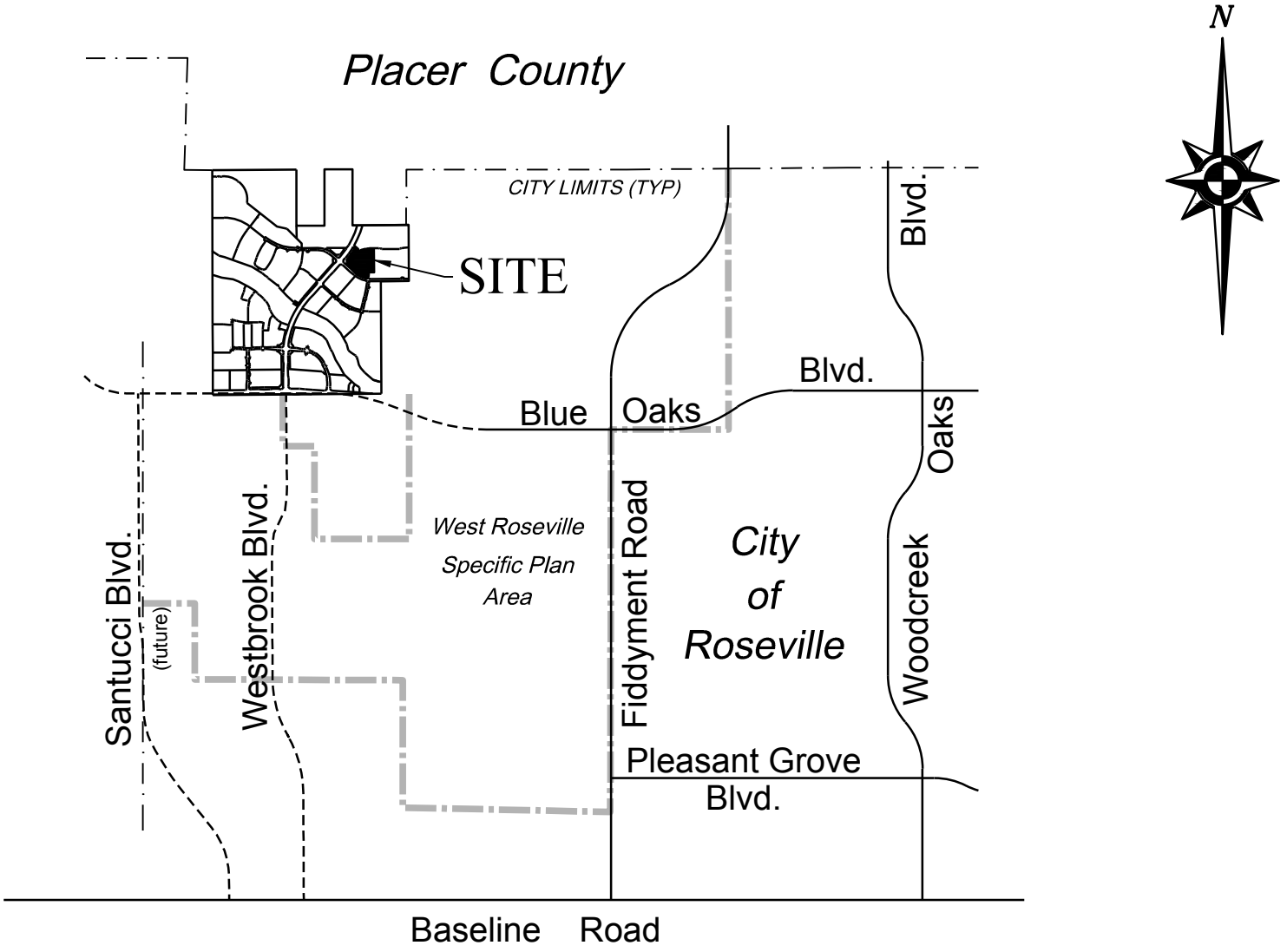

VICINITY MAP

CREEKVIEW PHASE 4 VILLAGE 8

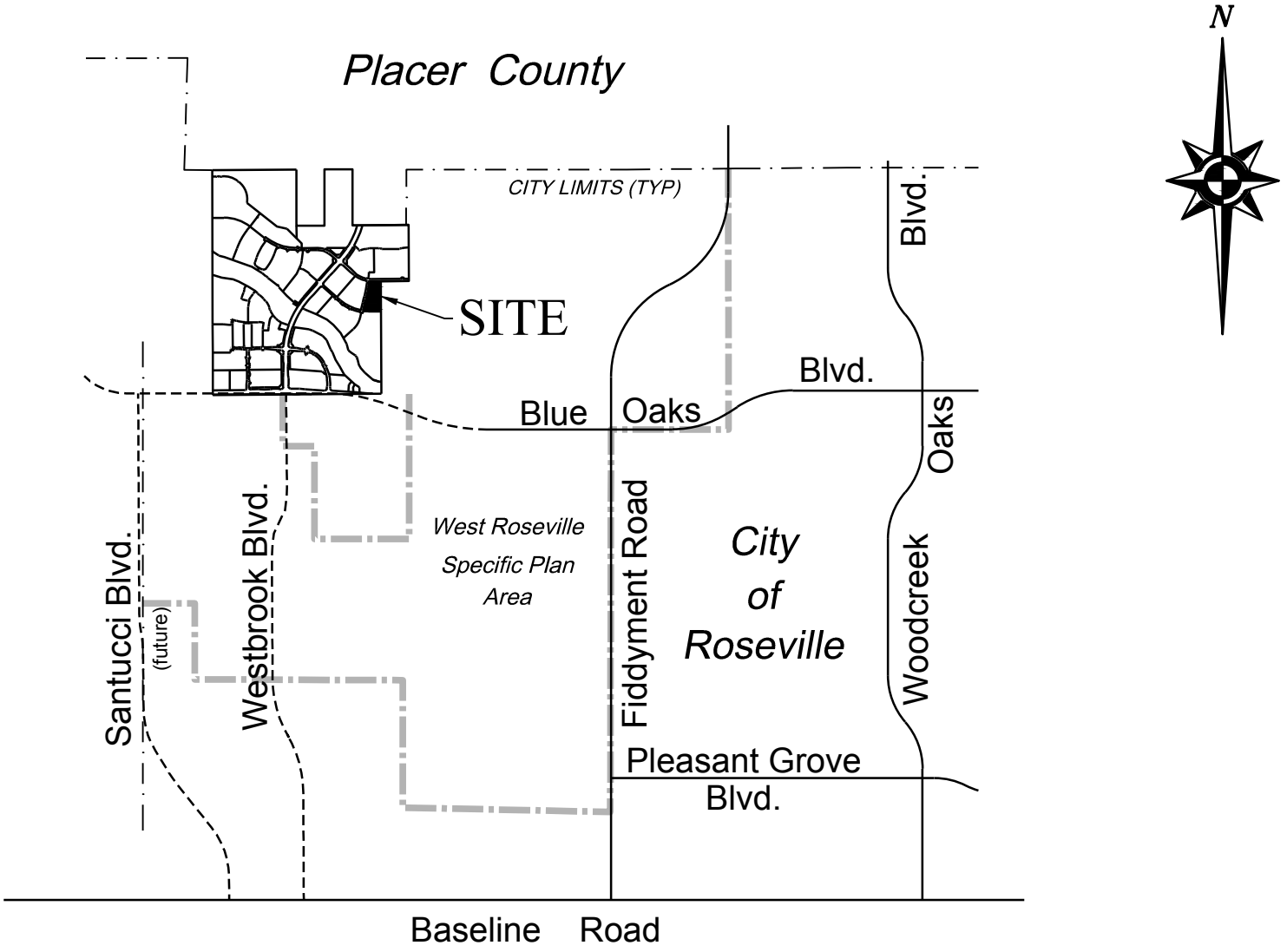

VICINITY MAP

BOOK_____ OF MAPS, PAGE_____

OWNER'S STATEMENT

THE UNDERSIGNED HEREBY CERTIFY THAT THEY ARE THE ONLY PERSONS HAVING ANY RECORD TITLE INTEREST IN THE REAL PROPERTY INCLUDED WITHIN THE SUBDIVISION SHOWN UPON THIS FINAL MAP OF "CREEKVIEW PHASE 4 VILLAGE 6" AND THEY HEREBY CONSENT TO THE PREPARATION AND RECORDATION OF THIS FINAL MAP AND HEREBY OFFER FOR DEDICATION AND DO HEREBY DEDICATE FOR SPECIFIC PURPOSES THE FOLLOWING:

THE REAL PROPERTY DESCRIBED BELOW IS DEDICATED AS EASEMENTS FOR PUBLIC PURPOSES:

(A) A PUBLIC EASEMENT FOR THE INSTALLATION AND MAINTENANCE OF, BUT NOT LIMITED TO ELECTROLIERS, WATER AND GAS PIPES, SEWER AND DRAINAGE PIPES, AND FOR UNDERGROUND WIRE AND CONDUITS FOR ELECTRIC, TELEPHONE AND TELEVISION SERVICES AND TRAFFIC CONTROL APPURTENANCES TOGETHER WITH ANY AND ALL APPURTENANCES PERTAINING THERETO ON, OVER, UNDER AND ACROSS LOTS A, B, AND C, THE STREETS SHOWN HEREON AS ADIRONDACK PLACE, LEAP FROG LOOP, WHISTLING PINE WAY, AND CANOPY COURT AND THOSE STRIPS OF LAND LYING CONTIGUOUS TO THE RIGHTS-OF-WAY AS SHOWN HEREON AND DESIGNATED "PUE" (PUBLIC UTILITY EASEMENT).

THE REAL PROPERTY DESCRIBED BELOW IS DEDICATED IN FEE FOR PUBLIC PURPOSES:

(A) AS PUBLIC RIGHTS-OF-WAY (INCLUDING ALL IMPROVEMENTS THEREON) THE STREETS SHOWN HEREON AS ADIRONDACK PLACE, LEAP FROG LOOP, WHISTLING PINE WAY, AND CANOPY COURT.

(B) LOTS A, B, AND C AS SHOWN HEREON TO THE CITY OF ROSEVILLE FOR LANDSCAPING AND AS PUBLIC RIGHTS-OF-WAY.

ANTHEM UNITED CREEKVIEW DEVELOPMENTS LIMITED PARTNERSHIP,
A WASHINGTON LIMITED PARTNERSHIP

BY: _____

_____

NOTARY'S ACKNOWLEDGMENT

A NOTARY PUBLIC OR OTHER OFFICER COMPLETING THIS CERTIFICATE VERIFIES ONLY THE IDENTITY OF THE INDIVIDUAL WHO SIGNED THE DOCUMENT TO WHICH THIS CERTIFICATE IS ATTACHED, AND NOT THE TRUTHFULNESS, ACCURACY OR VALIDITY OF THAT DOCUMENT.

STATE OF CALIFORNIA

COUNTY OF _____

ON_____ BEFORE ME,_____, A NOTARY PUBLIC

PERSONALLY APPEARED _____
WHO PROVED TO ME ON THE BASIS OF SATISFACTORY EVIDENCE TO BE THE PERSON(S) WHOSE NAME(S) IS/ARE SUBSCRIBED TO THE WITHIN INSTRUMENT AND ACKNOWLEDGED TO ME THAT HE/SHE/THEY EXECUTED THE SAME IN HIS/HER/THEIR AUTHORIZED CAPACITY(IES), AND THAT BY HIS/HER/THEIR SIGNATURE(S) ON THE INSTRUMENT THE PERSON(S), OR THE ENTITY UPON BEHALF OF WHICH THE PERSON(S) ACTED, EXECUTED THE INSTRUMENT.

I CERTIFY UNDER PENALTY OF PERJURY UNDER THE LAWS OF THE STATE OF CALIFORNIA THAT THE FOREGOING PARAGRAPH IS TRUE AND CORRECT.

WITNESS MY HAND AND OFFICIAL SEAL.

_____
SIGNATURE PRINTED NAME

MY PRINCIPAL PLACE OF BUSINESS IS _____COUNTY

MY COMMISSION EXPIRES: _____ MY COMMISSION NUMBER: _____

TRUSTEE'S STATEMENT

FIRST AMERICAN TITLE INSURANCE COMPANY, AS TRUSTEE UNDER THAT CERTAIN CONSTRUCTION DEED OF TRUST AND SECURITY AGREEMENT RECORDED ON JUNE 29, 2023, AS INSTRUMENT NO. 2023-0033905, ORPC AND MODIFIED BY INSTRUMENT NO. 2023-0033906 ORPC, HEREBY CONSENTS TO THE RECORDING OF THIS MAP AND THE SUBDIVISION OF THE LANDS SHOWN HEREON.

BY: _____

_____

_____

NOTARY'S ACKNOWLEDGMENT

A NOTARY PUBLIC OR OTHER OFFICER COMPLETING THIS CERTIFICATE VERIFIES ONLY THE IDENTITY OF THE INDIVIDUAL WHO SIGNED THE DOCUMENT TO WHICH THIS CERTIFICATE IS ATTACHED, AND NOT THE TRUTHFULNESS, ACCURACY OR VALIDITY OF THAT DOCUMENT.

STATE OF CALIFORNIA

COUNTY OF _____

ON_____ BEFORE ME,_____, A NOTARY PUBLIC

PERSONALLY APPEARED _____
WHO PROVED TO ME ON THE BASIS OF SATISFACTORY EVIDENCE TO BE THE PERSON(S) WHOSE NAME(S) IS/ARE SUBSCRIBED TO THE WITHIN INSTRUMENT AND ACKNOWLEDGED TO ME THAT HE/SHE/THEY EXECUTED THE SAME IN HIS/HER/THEIR AUTHORIZED CAPACITY(IES), AND THAT BY HIS/HER/THEIR SIGNATURE(S) ON THE INSTRUMENT THE PERSON(S), OR THE ENTITY UPON BEHALF OF WHICH THE PERSON(S) ACTED, EXECUTED THE INSTRUMENT.

I CERTIFY UNDER PENALTY OF PERJURY UNDER THE LAWS OF THE STATE OF CALIFORNIA THAT THE FOREGOING PARAGRAPH IS TRUE AND CORRECT.

WITNESS MY HAND AND OFFICIAL SEAL.

_____
SIGNATURE PRINTED NAME

MY PRINCIPAL PLACE OF BUSINESS IS _____COUNTY

MY COMMISSION EXPIRES: _____ MY COMMISSION NUMBER: _____

SURVEYOR'S STATEMENT

THIS MAP OF "CREEKVIEW PHASE 4 VILLAGE 6" WAS PREPARED BY ME OR UNDER MY DIRECTION AND IS BASED UPON A FIELD SURVEY IN CONFORMANCE WITH THE REQUIREMENTS OF THE SUBDIVISION MAP ACT AND LOCAL ORDINANCE AT THE REQUEST OF ANTHEM UNITED CREEKVIEW DEVELOPMENTS LIMITED PARTNERSHIP, IN JANUARY, 2019, I HEREBY STATE THAT THE SURVEY IS TRUE AND COMPLETE AS SHOWN, THAT ALL THE MONUMENTS ARE OF THE CHARACTER AND OCCUPY THE POSITIONS INDICATED OR THAT THEY WILL BE SET IN THOSE POSITIONS BEFORE DECEMBER 31, 2025, AND THAT THE MONUMENTS ARE, OR WILL BE, SUFFICIENT TO ENABLE THE SURVEY TO BE RETRACED, AND THAT THIS FINAL MAP SUBSTANTIALLY CONFORMS TO THE CONDITIONALLY APPROVED TENTATIVE MAP.

MACKAY & SOMPS CIVIL ENGINEERS, INC.

BY: _____
PEDRO JARQUIN, PLS 8268
EXPIRATION DATE: DECEMBER 31, 2025

DATE: _____

CITY ENGINEER'S STATEMENT

I HEREBY STATE THAT I HAVE EXAMINED THIS FINAL MAP OF "CREEKVIEW PHASE 4 VILLAGE 6" AND FIND IT TO BE SUBSTANTIALLY THE SAME AS THE TENTATIVE MAP ON FILE AND ANY APPROVED ALTERATIONS THEREOF; THAT ALL PROVISIONS OF THE SUBDIVISION MAP ACT AND ALL APPLICABLE CITY ORDINANCES HAVE BEEN COMPLIED WITH.

_____ DATE: _____

MARC STOUT, R.C.E. 69879
CITY ENGINEER, CITY OF ROSEVILLE
LICENSE EXPIRES: SEPTEMBER 30, 2024

I HEREBY STATE THAT I AM SATISFIED THIS FINAL MAP OF "CREEKVIEW PHASE 4 VILLAGE 6" IS TECHNICALLY CORRECT.

FOR MARC STOUT, CITY ENGINEER, CITY OF ROSEVILLE

_____ DATE: _____

TIMOTHY G. BLAIR, PLS 8278
EXPIRES DECEMBER 31, 2025

CITY CLERK'S STATEMENT

I HEREBY CERTIFY THAT THE CITY COUNCIL, CITY OF ROSEVILLE, HAS APPROVED THIS FINAL MAP OF "CREEKVIEW PHASE 4 VILLAGE 6", AND HAS ACCEPTED ON BEHALF OF THE PUBLIC, THE PUBLIC UTILITY EASEMENTS OFFERED HEREON FOR DEDICATION AND HAS ACCEPTED, SUBJECT TO IMPROVEMENT, LOTS A, B, AND C AND THE RIGHTS-OF-WAY OFFERED HEREON FOR DEDICATION, AND HEREBY APPROVES THE ABANDONMENT OF THE EASEMENTS LISTED WITHIN NOTE 5 ON SHEET 2.

_____
CITY CLERK, CITY OF ROSEVILLE

DATE: _____ BY: _____
ASSISTANT CITY CLERK

RECORDER'S STATEMENT

FILED THIS _____ DAY OF _____, 2024, AT _____ .M. IN BOOK _____ OF MAPS, AT PAGE _____, IN THE OFFICE OF THE PLACER COUNTY RECORDER, AT THE REQUEST OF MACKAY & SOMPS CIVIL ENGINEERS, INC.

_____ DOCUMENT NO.: _____
RECORDER OF PLACER COUNTY
STATE OF CALIFORNIA

BY:_____ FEE: $ _____
DEPUTY

FINAL MAP OF

CREEKVIEW PHASE 4 VILLAGE 6

SUBDIVISION NO. PL20-0201

LOT 6 AS SHOWN ON THAT CERTAIN FINAL MAP TITLED "CREEKVIEW - PHASE 3 LARGE LOT SUBDIVISION, SUBDIVISION NO. PL20-0201", FILED FOR RECORD ON DECEMBER 2, 2021, IN BOOK FF OF MAPS AT PAGE 84, PLACER COUNTY RECORDS, WITHIN SECTION 14, TOWNSHIP 11 NORTH, RANGE 5 EAST, MOUNT DIABLO MERIDIAN

CITY OF ROSEVILLE • PLACER COUNTY • CALIFORNIA

MACKAY & SOMPS
ENGINEERS PLANNERS SURVEYORS
1025 Creekside Ridge Drive, Suite 150, Roseville, CA 95678 (916) 773-1189

AUGUST 2024

SHEET 1 OF 4 18431.CV.PH4.V6

BOOK_____ OF MAPS, PAGE_____

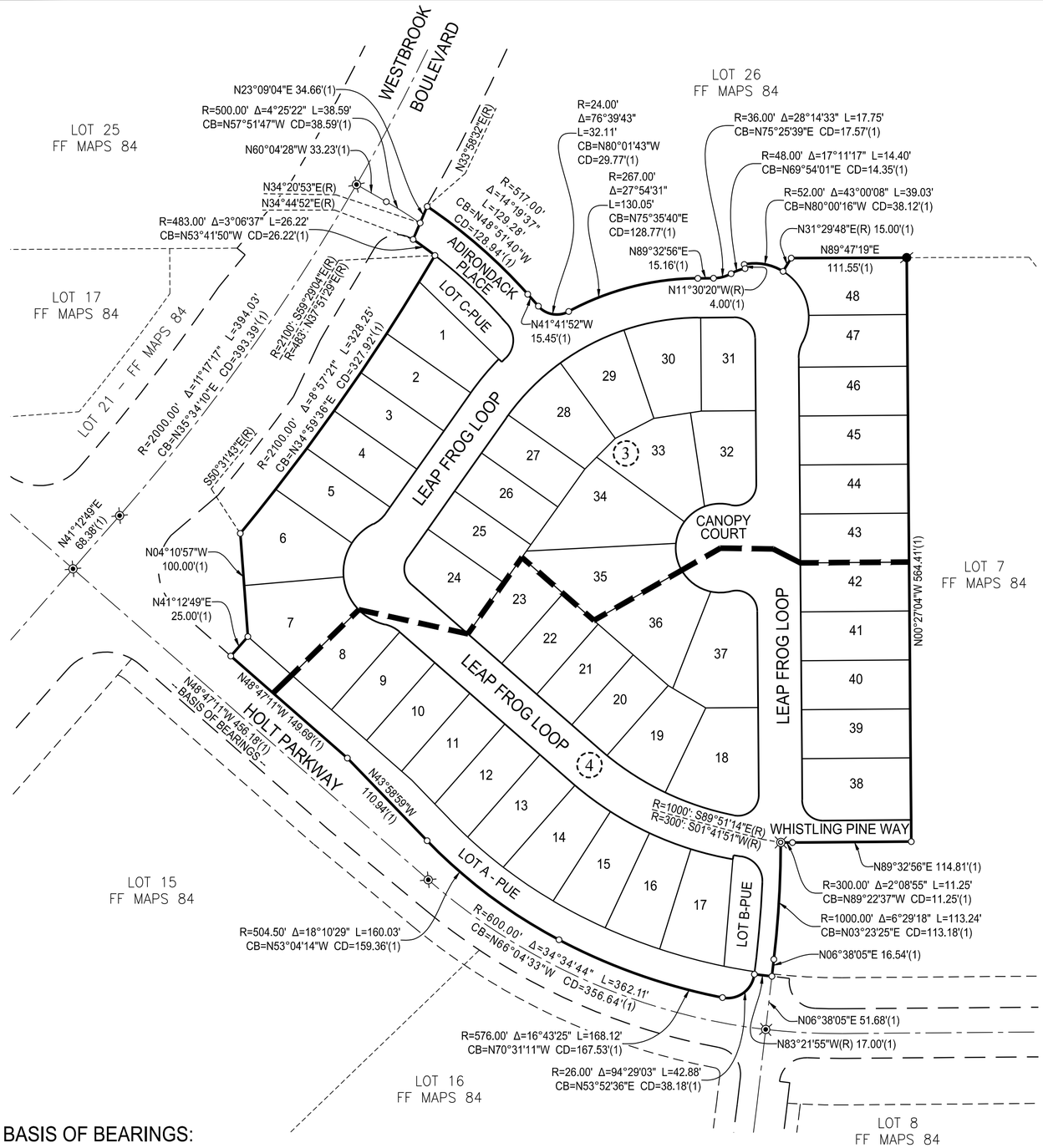

BASIS OF BEARINGS:

THE BASIS OF BEARINGS FOR THIS MAP IS NORTH 48°47'11" WEST ALONG THE CENTERLINE OF HOLT PARKWAY AS SHOWN ON THAT CERTAIN FINAL MAP ENTITLED "CREEKVIEW - PHASE 3 LARGE LOT SUBDIVISION" FILED FOR RECORD ON DECEMBER 2, 2021 IN BOOK FF OF MAPS, AT PAGE 84, PLACER COUNTY RECORDS.

REFERENCES:

(1) FF MAPS 84

NOTES

1. ALL CURVES ARE DIMENSIONED WITH RADIUS, DELTA, ARC LENGTH, CHORD BEARING AND CHORD LENGTH. DISTANCES SHOWN HEREON ARE IN FEET AND DECIMALS THEREOF AND ARE "GROUND" DISTANCES. DUE TO ROUNDING, THE SUM OF INDIVIDUAL DIMENSIONS MAY NOT EQUAL THE OVERALL DIMENSION.

2. TOTAL AREA FOR THIS SUBDIVISION IS 8.045± ACRES, CONSISTING OF 48 RESIDENTIAL LOTS AND 3 LANDSCAPE LOTS.

3. ALL FRONT LOT CORNERS WILL BE SET WITH A 1" DIAMETER BRASS DISC STAMPED "LS 8268" IN THE SIDEWALK ON THE EXTENSION OF SIDE LOT LINES 1.00 FOOT FROM THE FRONT PROPERTY LINE UNLESS OTHERWISE NOTED.

4. ALL REAR LOT CORNERS AND ANGLE POINTS WILL BE SET WITH A 5/8" REBAR WITH PLASTIC CAP STAMPED "LS 8268". WHERE MONUMENTS FALL WITHIN A SOUND WALL OR CONCRETE FOOTING A 5/8" REBAR WITH PLASTIC CAP STAMPED "LS 8268" WILL BE SET ON THE SIDE LOT LINE ON A 4.00 FOOT OFFSET TO THE REAR LOT CORNER OR A 3/4" DIAMETER BRASS TAG STAMPED "LS 8268" WILL BE SET WITH EPOXY TO THE FACE OF WALL 2.00 FOOT ABOVE GROUND OR ON TOP OF WALL WHERE AN OFFSET MONUMENT CANNOT BE SET.

5. PURSUANT TO GOVERNMENT CODE SECTION 66434(G), THE FOLLOWING EASEMENTS, NOT SHOWN HEREON, IS HEREBY ABANDONED:

   a. 25'/30' PUE/PE ALONG THE NORTHERLY RIGHT-OF-WAY OF HOLT PARKWAY, WITHIN LOT 6 AS SHOWN ON THAT CERTAIN FINAL MAP ENTITLED "CREEKVIEW - PHASE 3 LARGE LOT SUBDIVISION", FILED FOR RECORD ON DECEMBER 2, 2021 IN BOOK FF OF MAPS, AT PAGE 84, PLACER COUNTY RECORDS.

5. A PRELIMINARY SOILS REPORT WAS PREPARED BY GEOCON CONSULTANTS, INC. DATED AUGUST, 2014; PROJECT NO. S9578-05-05 AND ON FILE WITH THE CITY OF ROSEVILLE DEVELOPMENT SERVICES - ENGINEERING DEPARTMENT, FILE NO. 308-885.

LEGEND:

⊙	COPPERWELD SURVEY MONUMENT WITH CENTER PUNCH IN MONUMENT WELL STAMPED "LS 9265" TO BE SET PER (1)
●	5/8" REBAR WITH PLASTIC CAP STAMPED "LS 9265" TO BE SET PER (1)
⊙	SET COPPERWELD SURVEY MONUMENT WITH CENTER PUNCH IN MONUMENT WELL STAMPED "LS 8268"
○	DIMENSION POINT
CB	CHORD BEARING
CD	CHORD DISTANCE
IOD	IRREVOCABLE OFFER OF DEDICATION
(OA)	OVERALL
OR	OFFICIAL RECORDS OF PLACER COUNTY
PUE	PUBLIC UTILITY EASEMENT
(R)	RADIAL BEARING
SF	SQUARE FEET
(X)	SHEET INDEX NUMBER
———	BOUNDARY
———	LOT LINE
- - - - -	ADJACENT PROPERTY
———	RIGHT-OF-WAY
— — —	EXISTING RIGHT-OF-WAY
- - - - -	EASEMENT
—— - ——	CENTER LINE

N

0 40 80 160

SCALE: 1"=80'

FINAL MAP OF

CREEKVIEW PHASE 4 VILLAGE 6

SUBDIVISION NO. PL20-0201

LOT 6 AS SHOWN ON THAT CERTAIN FINAL MAP TITLED "CREEKVIEW - PHASE 3 LARGE LOT SUBDIVISION, SUBDIVISION NO. PL20-0201", FILED FOR RECORD ON DECEMBER 2, 2021, IN BOOK FF OF MAPS AT PAGE 84, PLACER COUNTY RECORDS, WITHIN SECTION 14, TOWNSHIP 11 NORTH, RANGE 5 EAST, MOUNT DIABLO MERIDIAN

CITY OF ROSEVILLE • PLACER COUNTY • CALIFORNIA

MACKAY & SOMPS
ENGINEERS PLANNERS SURVEYORS
1025 Creekside Ridge Drive, Suite 150, Roseville, CA 95678 (916) 773-1189

AUGUST 2024

18431.CV.PH4.V6

N

0 30 60

SCALE: 1"=30'

Curve Table					
Curve #	Radius	Delta	Length	Chord Bearing	Chord Length
C1	267.00'	1°10'48"	5.50'	N44°47'01"E	5.50'
C2	24.00'	87°04'17"	36.47'	N01°50'17"E	33.06'
C3	250.00'	19°05'20"	83.29'	N44°45'29"E	82.91'

WESTBROOK BOULEVARD

ADIRONDACK PLACE

LEAP FROG LOOP

CANOPY COURT

LOT 22 PUE/PE FF MAPS 84

LOT 26 FF MAPS 84

LOT 7 FF MAPS 84

LOT A PUE 17,164 SF

SEE SHEET 4

SEE SHEET 4

SEE SHEET 4

SEE SHEET 2 FOR NOTES, REFERENCES, BASIS OF BEARINGS AND LEGEND

FINAL MAP OF

CREEKVIEW PHASE 4 VILLAGE 6

SUBDIVISION NO. PL20-0201

LOT 6 AS SHOWN ON THAT CERTAIN FINAL MAP TITLED "CREEKVIEW - PHASE 3 LARGE LOT SUBDIVISION, SUBDIVISION NO. PL20-0201", FILED FOR RECORD ON DECEMBER 2, 2021, IN BOOK FF OF MAPS AT PAGE 84, PLACER COUNTY RECORDS, WITHIN SECTION 14, TOWNSHIP 11 NORTH, RANGE 5 EAST, MOUNT DIABLO MERIDIAN

CITY OF ROSEVILLE • PLACER COUNTY • CALIFORNIA

MACKAY & SOMPS
ENGINEERS PLANNERS SURVEYORS
1025 Creekside Ridge Drive, Suite 150, Roseville, CA 95678 (916) 773-1189

AUGUST 2024

 18431.CV.PH4.V6

SEE SHEET 3

SEE SHEET 3

SEE SHEET 3

CANOPY COURT

LEAP FROG LOOP

LEAP FROG LOOP

HOLT PARKWAY

WHISTLING PINE WAY

LOT 7
FF MAPS 84

LOT 7
FF MAPS 84

LOT A
PUE
17,164 SF

LOT B
PUE
3,195 SF

Curve Table					
Curve #	Radius	Delta	Length	Chord Bearing	Chord Length
C1	32.00'	28°14'33"	15.77'	N62°54'28"W	15.61'
C2	546.00'	3°09'14"	30.06'	N80°00'15"W	30.05'
C3	317.00'	1°20'39"	7.44'	N80°46'31"W	7.44'
C4	24.00'	83°49'53"	35.12'	N39°31'54"W	32.07'

SCALE: 1"=30'

FINAL MAP OF
CREEKVIEW PHASE 4
VILLAGE 6
SUBDIVISION NO. PL20-0201

LOT 6 AS SHOWN ON THAT CERTAIN FINAL MAP TITLED "CREEKVIEW - PHASE 3 LARGE LOT SUBDIVISION, SUBDIVISION NO. PL20-0201", FILED FOR RECORD ON DECEMBER 2, 2021, IN BOOK FF OF MAPS AT PAGE 84, PLACER COUNTY RECORDS, WITHIN SECTION 14, TOWNSHIP 11 NORTH, RANGE 5 EAST, MOUNT DIABLO MERIDIAN

CITY OF ROSEVILLE • PLACER COUNTY • CALIFORNIA

MACKAY & SOMPS
ENGINEERS PLANNERS SURVEYORS
1025 Creekside Ridge Drive, Suite 150, Roseville, CA 95678 (916) 773-1189

AUGUST 2024

18431.CV.PH4.V6

SEE SHEET 2 FOR NOTES, REFERENCES, BASIS OF BEARINGS AND LEGEND

BOOK_____ OF MAPS, PAGE_____

OWNER'S STATEMENT

THE UNDERSIGNED HEREBY CERTIFY THAT THEY ARE THE ONLY PERSONS HAVING ANY RECORD TITLE INTEREST IN THE REAL PROPERTY INCLUDED WITHIN THE SUBDIVISION SHOWN UPON THIS FINAL MAP OF "CREEKVIEW PHASE 4 VILLAGE 8" AND THEY HEREBY CONSENT TO THE PREPARATION AND RECORDATION OF THIS FINAL MAP AND HEREBY OFFER FOR DEDICATION AND DO HEREBY DEDICATE FOR SPECIFIC PURPOSES THE FOLLOWING:

THE REAL PROPERTY DESCRIBED BELOW IS DEDICATED AS EASEMENTS FOR PUBLIC PURPOSES:

(A) A PUBLIC EASEMENT FOR THE INSTALLATION AND MAINTENANCE OF, BUT NOT LIMITED TO ELECTROLIERS, WATER AND GAS PIPES, SEWER AND DRAINAGE PIPES, AND FOR UNDERGROUND WIRE AND CONDUITS FOR ELECTRIC, TELEPHONE AND TELEVISION SERVICES AND TRAFFIC CONTROL APPURTENANCES TOGETHER WITH ANY AND ALL APPURTENANCES PERTAINING THERETO ON, OVER, UNDER AND ACROSS LOT A, THE STREETS SHOWN HEREON AS CANOE COURT AND CHIPMUNK COURT AND THOSE STRIPS OF LAND LYING CONTIGUOUS TO THE RIGHTS-OF-WAY AS SHOWN HEREON AND DESIGNATED "PUE" (PUBLIC UTILITY EASEMENT).

(B) A PUBLIC EASEMENT FOR THE INSTALLATION AND MAINTENANCE OF DRAINAGE PIPES OR OPEN DRAINAGE CHANNELTOGETHER WITH ANY AND ALL APPURTENANCES PERTAINING THERETO ON, OVER, UNDER AND ACROSS THOSE AREAS AS SHOWN HEREON AND DESIGNATED "SDE" (STORM DRAINAGE EASEMENT).

THE REAL PROPERTY DESCRIBED BELOW IS DEDICATED IN FEE FOR PUBLIC PURPOSES:

(A) AS PUBLIC RIGHTS-OF-WAY (INCLUDING ALL IMPROVEMENTS THEREON) THE STREETS SHOWN HEREON AS CANOE COURT AND CHIPMUNK COURT.

(B) LOT A AS SHOWN HEREON TO THE CITY OF ROSEVILLE FOR LANDSCAPING AND AS PUBLIC RIGHT-OF-WAY.

ANTHEM UNITED CREEKVIEW DEVELOPMENTS LIMITED PARTNERSHIP,
A WASHINGTON LIMITED PARTNERSHIP

BY: _____

_____

TRUSTEE'S STATEMENT

FIRST AMERICAN TITLE INSURANCE COMPANY, A NEBRASKA CORPORATION, AS TRUSTEE UNDER THAT CERTAIN CONSTRUCTION DEED OF TRUST AND SECURITY AGREEMENT RECORDED ON JUNE 29, 2023, AS INSTRUMENT NO. 2023-0033905, ORPC AND MODIFIED BY INSTRUMENT NO. 2023-0033906 ORPC, HEREBY CONSENTS TO THE RECORDING OF THIS MAP AND THE SUBDIVISION OF THE LANDS SHOWN HEREON.

BY: _____

_____

_____

NOTARY'S ACKNOWLEDGMENT

A NOTARY PUBLIC OR OTHER OFFICER COMPLETING THIS CERTIFICATE VERIFIES ONLY THE IDENTITY OF THE INDIVIDUAL WHO SIGNED THE DOCUMENT TO WHICH THIS CERTIFICATE IS ATTACHED, AND NOT THE TRUTHFULNESS, ACCURACY OR VALIDITY OF THAT DOCUMENT.

STATE OF CALIFORNIA

COUNTY OF _____

ON_____ BEFORE ME,_____, A NOTARY PUBLIC

PERSONALLY APPEARED _____
WHO PROVED TO ME ON THE BASIS OF SATISFACTORY EVIDENCE TO BE THE PERSON(S) WHOSE NAME(S) IS/ARE SUBSCRIBED TO THE WITHIN INSTRUMENT AND ACKNOWLEDGED TO ME THAT HE/SHE/THEY EXECUTED THE SAME IN HIS/HER/THEIR AUTHORIZED CAPACITY(IES), AND THAT BY HIS/HER/THEIR SIGNATURE(S) ON THE INSTRUMENT THE PERSON(S), OR THE ENTITY UPON BEHALF OF WHICH THE PERSON(S) ACTED, EXECUTED THE INSTRUMENT.

I CERTIFY UNDER PENALTY OF PERJURY UNDER THE LAWS OF THE STATE OF CALIFORNIA THAT THE FOREGOING PARAGRAPH IS TRUE AND CORRECT.

WITNESS MY HAND AND OFFICIAL SEAL.

_____
SIGNATURE PRINTED NAME

MY PRINCIPAL PLACE OF BUSINESS IS _____COUNTY

MY COMMISSION EXPIRES: _____ MY COMMISSION NUMBER: _____

CITY ENGINEER'S STATEMENT

I HEREBY STATE THAT I HAVE EXAMINED THIS FINAL MAP OF "CREEKVIEW PHASE 4 VILLAGE 8" AND FIND IT TO BE SUBSTANTIALLY THE SAME AS THE TENTATIVE MAP ON FILE AND ANY APPROVED ALTERATIONS THEREOF; THAT ALL PROVISIONS OF THE SUBDIVISION MAP ACT AND ALL APPLICABLE CITY ORDINANCES HAVE BEEN COMPLIED WITH.

_____ DATE: _____

MARC STOUT, R.C.E. 69879
CITY ENGINEER, CITY OF ROSEVILLE
LICENSE EXPIRES: SEPTEMBER 30, 2024

I HEREBY STATE THAT I AM SATISFIED THIS FINAL MAP OF "CREEKVIEW PHASE 4 VILLAGE 8" IS TECHNICALLY CORRECT.

FOR MARC STOUT, CITY ENGINEER, CITY OF ROSEVILLE

_____ DATE: _____

TIMOTHY G. BLAIR, PLS 8278
EXPIRES DECEMBER 31, 2025

LICENSED LAND SURVEYOR
TIMOTHY G BLAIR
Exp. 12-31-25
No. 8278
STATE OF CALIFORNIA

CITY CLERK'S STATEMENT

I HEREBY CERTIFY THAT THE CITY COUNCIL, CITY OF ROSEVILLE, HAS APPROVED THIS FINAL MAP OF "CREEKVIEW PHASE 4 VILLAGE 8", AND HAS ACCEPTED ON BEHALF OF THE PUBLIC, THE PUBLIC UTILITY EASEMENTS AND STORM DRAINAGE EASEMENT OFFERED HEREON FOR DEDICATION AND HAS ACCEPTED, SUBJECT TO IMPROVEMENT, LOT A AND THE RIGHTS-OF-WAY OFFERED HEREON FOR DEDICATION, AND HEREBY APPROVES THE ABANDONMENT OF THE EASEMENTS LISTED WITHIN NOTE 5 ON SHEET 2.

_____
CITY CLERK, CITY OF ROSEVILLE

DATE: _____ BY: _____
ASSISTANT CITY CLERK

NOTARY'S ACKNOWLEDGMENT

A NOTARY PUBLIC OR OTHER OFFICER COMPLETING THIS CERTIFICATE VERIFIES ONLY THE IDENTITY OF THE INDIVIDUAL WHO SIGNED THE DOCUMENT TO WHICH THIS CERTIFICATE IS ATTACHED, AND NOT THE TRUTHFULNESS, ACCURACY OR VALIDITY OF THAT DOCUMENT.

STATE OF CALIFORNIA

COUNTY OF _____

ON_____ BEFORE ME,_____, A NOTARY PUBLIC

PERSONALLY APPEARED _____
WHO PROVED TO ME ON THE BASIS OF SATISFACTORY EVIDENCE TO BE THE PERSON(S) WHOSE NAME(S) IS/ARE SUBSCRIBED TO THE WITHIN INSTRUMENT AND ACKNOWLEDGED TO ME THAT HE/SHE/THEY EXECUTED THE SAME IN HIS/HER/THEIR AUTHORIZED CAPACITY(IES), AND THAT BY HIS/HER/THEIR SIGNATURE(S) ON THE INSTRUMENT THE PERSON(S), OR THE ENTITY UPON BEHALF OF WHICH THE PERSON(S) ACTED, EXECUTED THE INSTRUMENT.

I CERTIFY UNDER PENALTY OF PERJURY UNDER THE LAWS OF THE STATE OF CALIFORNIA THAT THE FOREGOING PARAGRAPH IS TRUE AND CORRECT.

WITNESS MY HAND AND OFFICIAL SEAL.

_____
SIGNATURE PRINTED NAME

MY PRINCIPAL PLACE OF BUSINESS IS _____COUNTY

MY COMMISSION EXPIRES: _____ MY COMMISSION NUMBER: _____

SURVEYOR'S STATEMENT

THIS MAP OF "CREEKVIEW PHASE 4 VILLAGE 8" WAS PREPARED BY ME OR UNDER MY DIRECTION AND IS BASED UPON A FIELD SURVEY IN CONFORMANCE WITH THE REQUIREMENTS OF THE SUBDIVISION MAP ACT AND LOCAL ORDINANCE AT THE REQUEST OF ANTHEM UNITED CREEKVIEW DEVELOPMENTS LIMITED PARTNERSHIP, IN JANUARY, 2019, I HEREBY STATE THAT THE SURVEY IS TRUE AND COMPLETE AS SHOWN, THAT ALL THE MONUMENTS ARE OF THE CHARACTER AND OCCUPY THE POSITIONS INDICATED OR THAT THEY WILL BE SET IN THOSE POSITIONS BEFORE DECEMBER 31, 2025, AND THAT THE MONUMENTS ARE, OR WILL BE, SUFFICIENT TO ENABLE THE SURVEY TO BE RETRACED, AND THAT THIS FINAL MAP SUBSTANTIALLY CONFORMS TO THE CONDITIONALLY APPROVED TENTATIVE MAP.

MACKAY & SOMPS CIVIL ENGINEERS, INC.

BY: _____
PEDRO JARQUIN., PLS 8268
EXPIRATION DATE: DECEMBER 31, 2025

DATE: _____

LICENSED LAND SURVEYOR
PEDRO JARQUIN
Exp. 12-31-25
No. 8268
STATE OF CALIFORNIA

RECORDER'S STATEMENT

FILED THIS _____ DAY OF _____, 2024, AT _____ .M. IN BOOK _____ OF MAPS, AT PAGE _____, IN THE OFFICE OF THE PLACER COUNTY RECORDER, AT THE REQUEST OF MACKAY & SOMPS CIVIL ENGINEERS, INC.

_____ DOCUMENT NO.: _____
RECORDER OF PLACER COUNTY
STATE OF CALIFORNIA

BY:_____ FEE: $ _____
DEPUTY

FINAL MAP OF

CREEKVIEW PHASE 4 VILLAGE 8

SUBDIVISION NO. PL14-0522

A PORTION OF LOT 8 AS SHOWN ON THAT CERTAIN FINAL MAP TITLED "CREEKVIEW - PHASE 3 LARGE LOT SUBDIVISION, SUBDIVISION NO. PL20-0201", FILED FOR RECORD ON DECEMBER 2, 2021, IN BOOK FF OF MAPS AT PAGE 84, PLACER COUNTY RECORDS, WITHIN SECTION 14, TOWNSHIP 11 NORTH, RANGE 5 EAST, MOUNT DIABLO MERIDIAN

CITY OF ROSEVILLE • PLACER COUNTY • CALIFORNIA

MACKAY & SOMPS
ENGINEERS PLANNERS SURVEYORS
1025 Creekside Ridge Drive, Suite 150, Roseville, CA 95678 (916) 773-1189

AUGUST 2024

18431.CV.PH4.V8

BOOK_____ OF MAPS, PAGE_____

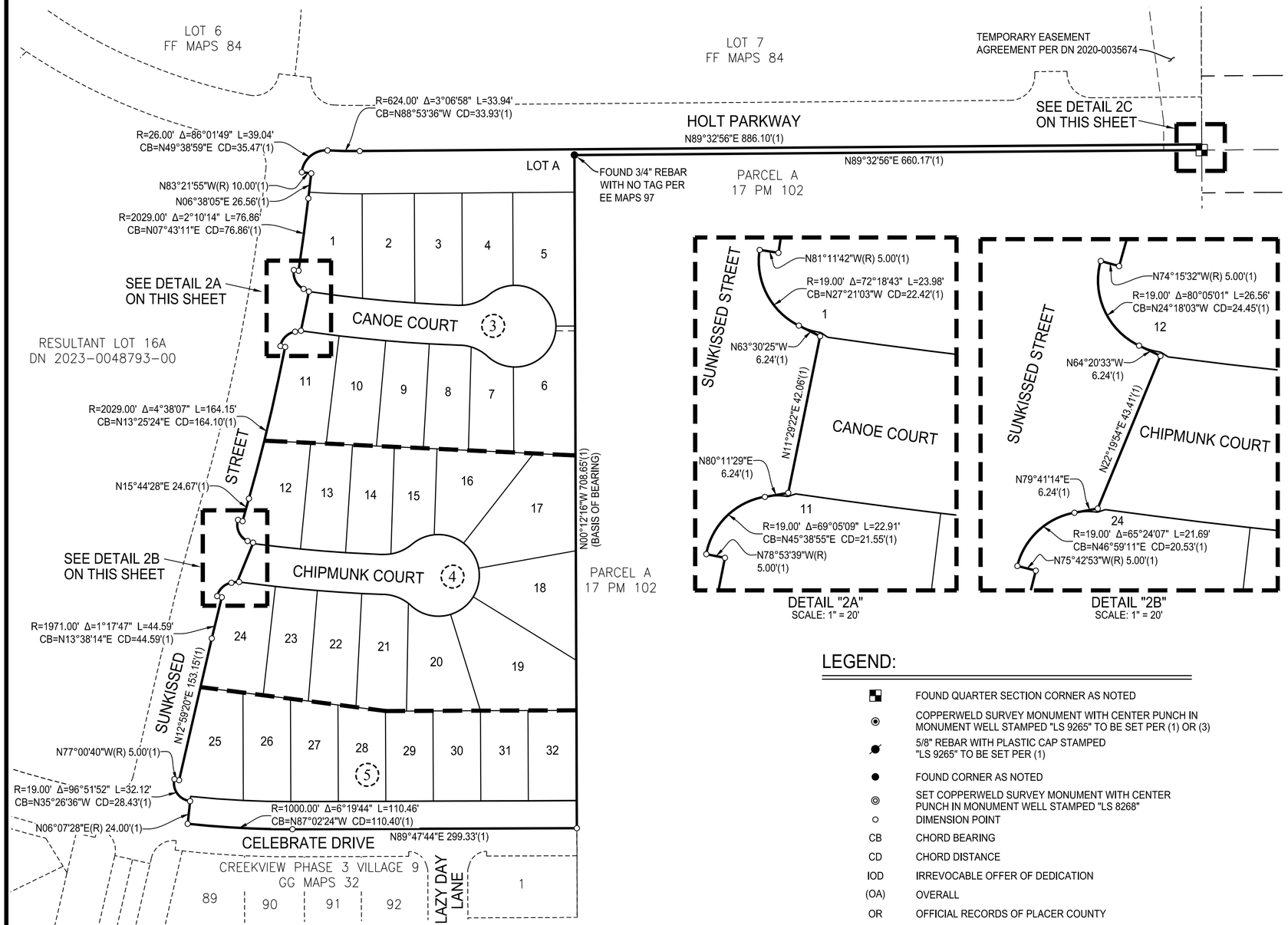

DETAIL "2A"
SCALE: 1" = 20'

DETAIL "2B"
SCALE: 1" = 20'

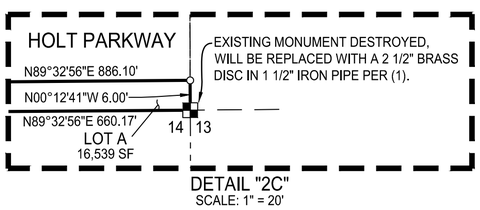

DETAIL "2C"
SCALE: 1" = 20'

NOTES

1. ALL CURVES ARE DIMENSIONED WITH RADIUS, DELTA, ARC LENGTH, CHORD BEARING AND CHORD LENGTH. DISTANCES SHOWN HEREON ARE IN FEET AND DECIMALS THEREOF AND ARE "GROUND" DISTANCES. DUE TO ROUNDING, THE SUM OF INDIVIDUAL DIMENSIONS MAY NOT EQUAL THE OVERALL DIMENSION.
2. TOTAL AREA FOR THIS SUBDIVISION IS 5.437± ACRES, CONSISTING OF 32 RESIDENTIAL LOTS AND 1 LANDSCAPE LOT.
3. ALL FRONT LOT CORNERS WILL BE SET WITH A 1" DIAMETER BRASS DISC STAMPED "LS 8268" IN THE SIDEWALK ON THE EXTENSION OF SIDE LOT LINES 1.00 FOOT FROM THE FRONT PROPERTY LINE UNLESS OTHERWISE NOTED.
4. ALL REAR LOT CORNERS AND ANGLE POINTS WILL BE SET WITH A 5/8" REBAR WITH PLASTIC CAP STAMPED "LS 8268". WHERE MONUMENTS FALL WITHIN A SOUND WALL OR CONCRETE FOOTING A 5/8" REBAR WITH PLASTIC CAP STAMPED "LS 8268" WILL BE SET ON THE SIDE LOT LINE ON A 4.00 FOOT OFFSET TO THE REAR LOT CORNER OR A 3/4" DIAMETER BRASS TAG STAMPED "LS 8268" WILL BE SET WITH EPOXY TO THE FACE OF WALL 2.00 FOOT ABOVE GROUND OR ON TOP OF WALL WHERE AN OFFSET MONUMENT CANNOT BE SET.
5. PURSUANT TO GOVERNMENT CODE SECTION 66434(G), THE FOLLOWING EASEMENTS, NOT SHOWN HEREON, IS HEREBY ABANDONED:
   a. 45' PUE/PE ALONG THE SOUTHERLY RIGHT-OF-WAY OF HOLT PARKWAY, WITHIN LOT 8 AS SHOWN ON THAT CERTAIN FINAL MAP ENTITLED "CREEKVIEW - PHASE 3 LARGE LOT SUBDIVISION", FILED FOR RECORD ON DECEMBER 2, 2021 IN BOOK FF OF MAPS , AT PAGE 84, PLACER COUNTY RECORDS.
   b. 12.5' PUE/PE ALONG THE EASTERLY RIGHT-OF-WAY OF SUNKISSED STREET, WITHIN LOT 8 AS SHOWN ON THAT CERTAIN FINAL MAP ENTITLED "CREEKVIEW - PHASE 3 LARGE LOT SUBDIVISION", FILED FOR RECORD ON DECEMBER 2, 2021 IN BOOK FF OF MAPS , AT PAGE 84, PLACER COUNTY RECORDS.
   c. PUE AS DESCRIBED IN DOCUMENT NUMBER 2023-0024786-00 RECORDED MAY 12, 2023, OFFICIAL RECORDS OF PLACER COUNTY, ALONG THE SOUTHERLY LINE OF LOT 8 AS SHOWN ON THAT CERTAIN FINAL MAP ENTITLED "CREEKVIEW - PHASE 3 LARGE LOT SUBDIVISION", FILED FOR RECORD ON DECEMBER 2, 2021 IN BOOK FF OF MAPS , AT PAGE 84, PLACER COUNTY RECORDS.
5. A PRELIMINARY SOILS REPORT WAS PREPARED BY GEOCON CONSULTANTS, INC. DATED AUGUST, 2014; PROJECT NO. S9578-05-05 AND ON FILE WITH THE CITY OF ROSEVILLE DEVELOPMENT SERVICES - ENGINEERING DEPARTMENT, FILE NO. 308-885.

BASIS OF BEARINGS:

THE BASIS OF BEARINGS FOR THIS MAP IS NORTH 00°12'16" WEST ALONG THE EASTERLY BOUNDARY LINE OF LOT 8 AS SHOWN ON THAT CERTAIN FINAL MAP ENTITLED "CREEKVIEW - PHASE 3 LARGE LOT SUBDIVISION" FILED FOR RECORD ON DECEMBER 2, 2021 IN BOOK FF OF MAPS, AT PAGE 84, PLACER COUNTY RECORDS.

REFERENCES:

(1) FF MAPS 84
(2) GG MAPS 32

LEGEND:

◪	FOUND QUARTER SECTION CORNER AS NOTED
⊙	COPPERWELD SURVEY MONUMENT WITH CENTER PUNCH IN MONUMENT WELL STAMPED "LS 9265" TO BE SET PER (1) OR (3)
⦿	5/8" REBAR WITH PLASTIC CAP STAMPED "LS 9265" TO BE SET PER (1)
●	FOUND CORNER AS NOTED
◎	SET COPPERWELD SURVEY MONUMENT WITH CENTER PUNCH IN MONUMENT WELL STAMPED "LS 8268"
○	DIMENSION POINT
CB	CHORD BEARING
CD	CHORD DISTANCE
IOD	IRREVOCABLE OFFER OF DEDICATION
(OA)	OVERALL
OR	OFFICIAL RECORDS OF PLACER COUNTY
PUE	PUBLIC UTILITY EASEMENT
(R)	RADIAL BEARING
SF	SQUARE FEET
(X)	SHEET INDEX NUMBER
———	BOUNDARY
———	LOT LINE
- - - - -	ADJACENT PROPERTY
———	RIGHT-OF-WAY
— — — —	IOD
— — — —	EASEMENT
——— - ———	CENTER LINE

N

0 40 80 160
SCALE: 1"=80'

FINAL MAP OF

CREEKVIEW PHASE 4 VILLAGE 8

SUBDIVISION NO. PL14-0522

A PORTION OF LOT 8 AS SHOWN ON THAT CERTAIN FINAL MAP TITLED "CREEKVIEW - PHASE 3 LARGE LOT SUBDIVISION, SUBDIVISION NO. PL20-0201", FILED FOR RECORD ON DECEMBER 2, 2021, IN BOOK FF OF MAPS AT PAGE 84, PLACER COUNTY RECORDS, WITHIN SECTION 14, TOWNSHIP 11 NORTH, RANGE 5 EAST, MOUNT DIABLO MERIDIAN

CITY OF ROSEVILLE • PLACER COUNTY • CALIFORNIA

MACKAY & SOMPS
ENGINEERS PLANNERS SURVEYORS
1025 Creekside Ridge Drive, Suite 150, Roseville, CA 95678 (916) 773-1189

AUGUST 2024

18431.CV.PH4.V8

LOT 7
FF MAPS 84

HOLT PARKWAY

R=600.00' Δ=7°05'09" L=74.20'
CB=N86°54'30"W CD=74.16'(1)

R=624.00' Δ=3°06'58" L=33.94'
CB=N88°53'36"W CD=33.93'(1)

R=26.00' Δ=86°01'49" L=39.04'
CB=N49°38'59"E CD=35.47'(1)

N89°32'56"E 705.68'(1)

R=500.00' Δ=2°33'45" L=22.36'
CB=N88°16'03"E CD=22.36'(1)

N89°32'56"E 135.81'(1)

R=500.00' Δ=2°33'45" L=22.36'
CB=S88°16'03"W CD=22.36'(1)

N89°32'56"E 886.10'(1)

N00°13'15"W 25.00'(1)

N00°12'41"W 6.00'(1)

N89°32'56"E 660.17'(1)

FOUND 3/4" REBAR
WITH NO TAG PER
EE MAPS 97

PARCEL A
17 PM 102

EXISTING MONUMENT DESTROYED,
WILL BE REPLACED WITH A 2 1/2" BRASS
DISC IN 1 1/2" IRON PIPE PER (1).

LOT A
16,539 SF

N89°32'56"E 225.74'

N83°21'55"W(R) 10.00'(1)
S04°09'01"W(R)
R=669.00' Δ=4°36'05" L=53.73'
CB=N88°09'02"W CD=53.71'

N06°38'05"E(R) 75.00'(1)
N06°38'05"E 26.56'(1)
19.93'

R=2029.00' Δ=2°10'14" L=76.86'
CB=N07°43'11"E CD=76.86'(1)

R=2000.00' Δ=3°20'16" L=116.51'
CB=N08°18'13"E CD=116.50'(1)

SUNKISSED DRIVE

RESULTANT LOT 16A
DN 2023-0048793-00

SEE DETAIL 3A
ON THIS SHEET

12.5' PUE

1
6,708 SF

2
6,209 SF

3
5,850 SF

4
5,800 SF

5
7,616 SF

N00°12'16"W 110.08'
S06°05'49"W(R)
S03°57'26"W(R)
N00°12'16"W 115.35'
N00°12'16"W 118.26'
S01°46'21"E(R)
N00°12'16"W 97.75'
N02°52'31"W(R)

Δ=2°07'25" L=54.82'
CB=N82°50'28"W CD=54.82'

Δ=2°08'23" L=55.23'
CB=N84°58'22"W CD=55.23'

Δ=3°54'32" L=3.07'
CB=N89°49'06"W CD=3.07'

Δ=1°49'16" L=47.01'
CB=N86°57'12"W CD=47.01'

Δ=38°39'02" L=30.36'
CB=N68°54'07"E CD=29.78'

Δ=37°32'53" L=28.18'
CB=N68°21'03"E CD=27.68'

Δ=92°40'15" L=69.55'
CB=N46°37'24"W CD=62.21'

R=45.00' Δ=42°33'34" L=33.43'
CB=N70°51'23"E CD=32.66'

R=262°47'41" L=197.23'
CD=64.51'
CB=S00°58'27"E

N89°47'44"E (R) 20.00'

N00°12'16"W 708.65'(1)(OA)
(BASIS OF BEARING)

5' SDE

39.00'
140.98'
136.27'

45'

Δ=1°37'39" L=42.61'
CB=N80°50'36"W CD=42.61'(1)

S80°01'39"E(R)
R=2000.00'
S09°58'14"W(R)
R=1500.00'

S08°20'34"W(R)

CANOE COURT

R=1479.00' Δ=6°05'04" L=157.06'
CB=S84°49'18"E CD=156.99'

Δ=8°28'51" L=222.03'
CB=N85°53'51"W CD=221.82'

R=1500.00' Δ=10°06'30" L=264.64'
CB=S85°05'01"E CD=264.29'

R=1521.00' Δ=6°16'22" L=166.52'
CB=N84°49'31"W CD=166.44'

R=45.00' Δ=40°20'00" L=31.68'
CB=N67°47'43"W CD=31.03'

R=2000.00' Δ=9°06'23" L=317.88' CB=N11°11'16"E CD=317.54'(1)(OA)
R=2000.00' Δ=5°46'07" L=201.36'
CB=N12°51'24"E CD=201.28'(1)

R=2029.00' Δ=4°38'07" L=164.15'
CB=N13°25'24"E CD=164.10'(1)(OA)

Δ=1°26'55" L=38.46'
CB=N82°24'48"W CD=38.46'

Δ=1°51'33" L=49.35'
CB=N84°04'02"W CD=49.35'

Δ=1°43'49" L=45.93'
CB=N85°51'43"W CD=45.93'

Δ=1°14'05" L=32.78'
CB=N87°20'40"W CD=32.78'

Δ=14°49'41" L=11.65'
CB=N80°32'52"W CD=11.61'

Δ=39°54'18" L=29.95'
CB=N67°34'52"W CD=29.35'

Δ=25°30'19" L=20.03'
CB=N60°22'52"W CD=19.87'

R=43.00' Δ=262°47'41" L=197.23'
CB=N00°58'27"E CD=64.51'

Δ=92°40'15" L=69.55'
CB=N46°07'51"E CD=62.21'

SEE DETAIL 3B
ON THIS SHEET

S76°02'22"E(R)
65.11'

53.10'
49.29'
47.49'
47.82'
65.08'

N87°17'04"W 327.89'

11
6,858 SF

10
5,767 SF

9
5,264 SF

8
5,046 SF

7
4,523 SF

6
7,211 SF

12
13
14
15
16
17

N06°51'44"E(R) 114.30'
N05°00'12"E(R) 111.32'
N03°16'22"E(R) 110.10'
N01°36'17"E 108.79'
S02°27'59"W(R)
N00°12'16"W 90.00'

12.5' PUE

19'
29'

SEE SHEET 4

SEE SHEET 2 FOR NOTES, REFERENCES, BASIS OF BEARINGS AND LEGEND

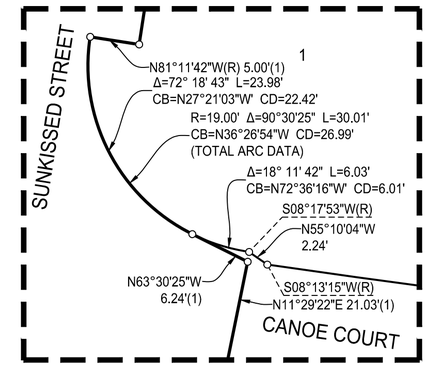

DETAIL "3A"
1" = 10'

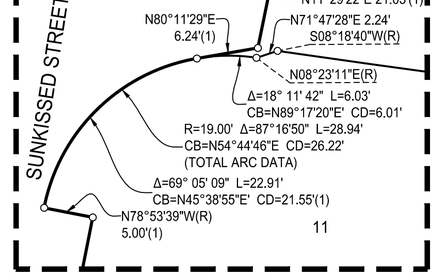

DETAIL "3B"
1" = 10'

N

0 30 60
SCALE: 1"=30'

FINAL MAP OF
CREEKVIEW PHASE 4
VILLAGE 8
SUBDIVISION NO. PL14-0522

A PORTION OF LOT 8 AS SHOWN ON THAT CERTAIN FINAL MAP TITLED "CREEKVIEW - PHASE 3 LARGE LOT SUBDIVISION, SUBDIVISION NO. PL20-0201", FILED FOR RECORD ON DECEMBER 2, 2021, IN BOOK FF OF MAPS AT PAGE 84, PLACER COUNTY RECORDS, WITHIN SECTION 14, TOWNSHIP 11 NORTH, RANGE 5 EAST, MOUNT DIABLO MERIDIAN

CITY OF ROSEVILLE • PLACER COUNTY • CALIFORNIA

MACKAY & SOMPS
ENGINEERS PLANNERS SURVEYORS
1025 Creekside Ridge Drive, Suite 150, Roseville, CA 95678 (916) 773-1189

AUGUST 2024

18431.CV.PH4.V8

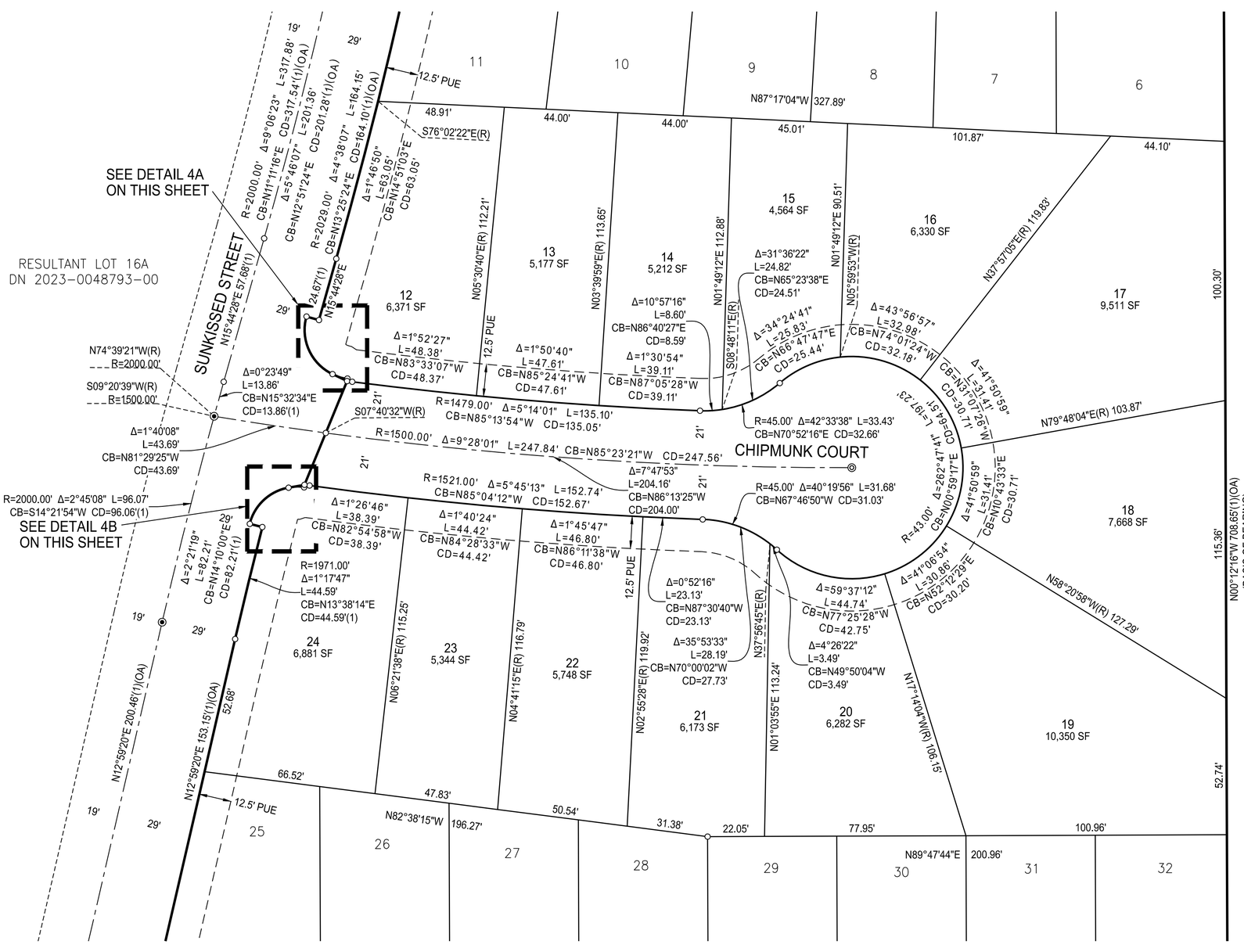

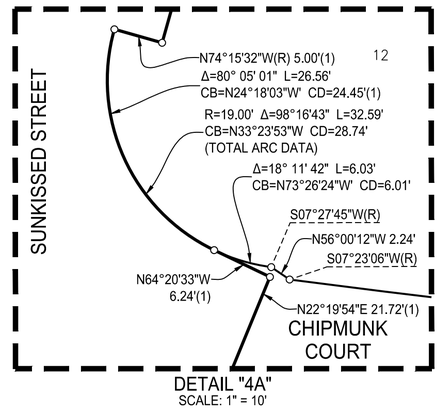

DETAIL "4A"
SCALE: 1" = 10'

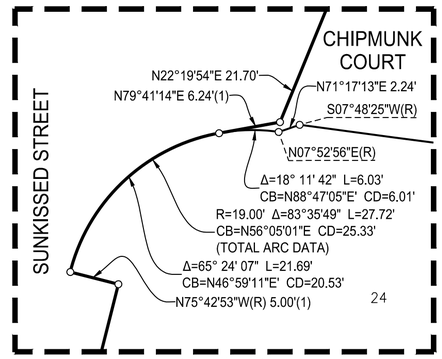

DETAIL "4B"
SCALE: 1" = 10'

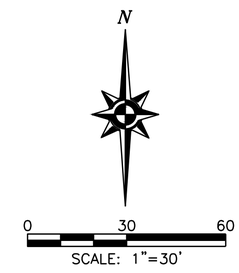

FINAL MAP OF

CREEKVIEW PHASE 4 VILLAGE 8

SUBDIVISION NO. PL14-0522

A PORTION OF LOT 8 AS SHOWN ON THAT CERTAIN FINAL MAP TITLED "CREEKVIEW - PHASE 3 LARGE LOT SUBDIVISION, SUBDIVISION NO. PL20-0201", FILED FOR RECORD ON DECEMBER 2, 2021, IN BOOK FF OF MAPS AT PAGE 84, PLACER COUNTY RECORDS, WITHIN SECTION 14, TOWNSHIP 11 NORTH, RANGE 5 EAST, MOUNT DIABLO MERIDIAN

CITY OF ROSEVILLE • PLACER COUNTY • CALIFORNIA

MACKAY & SOMPS
ENGINEERS PLANNERS SURVEYORS
1025 Creekside Ridge Drive, Suite 150, Roseville, CA 95678 (916) 773-1189

AUGUST 2024

18431.CV.PH4.V8

SEE SHEET 2 FOR NOTES, REFERENCES, BASIS OF BEARINGS AND LEGEND

SEE SHEET 4

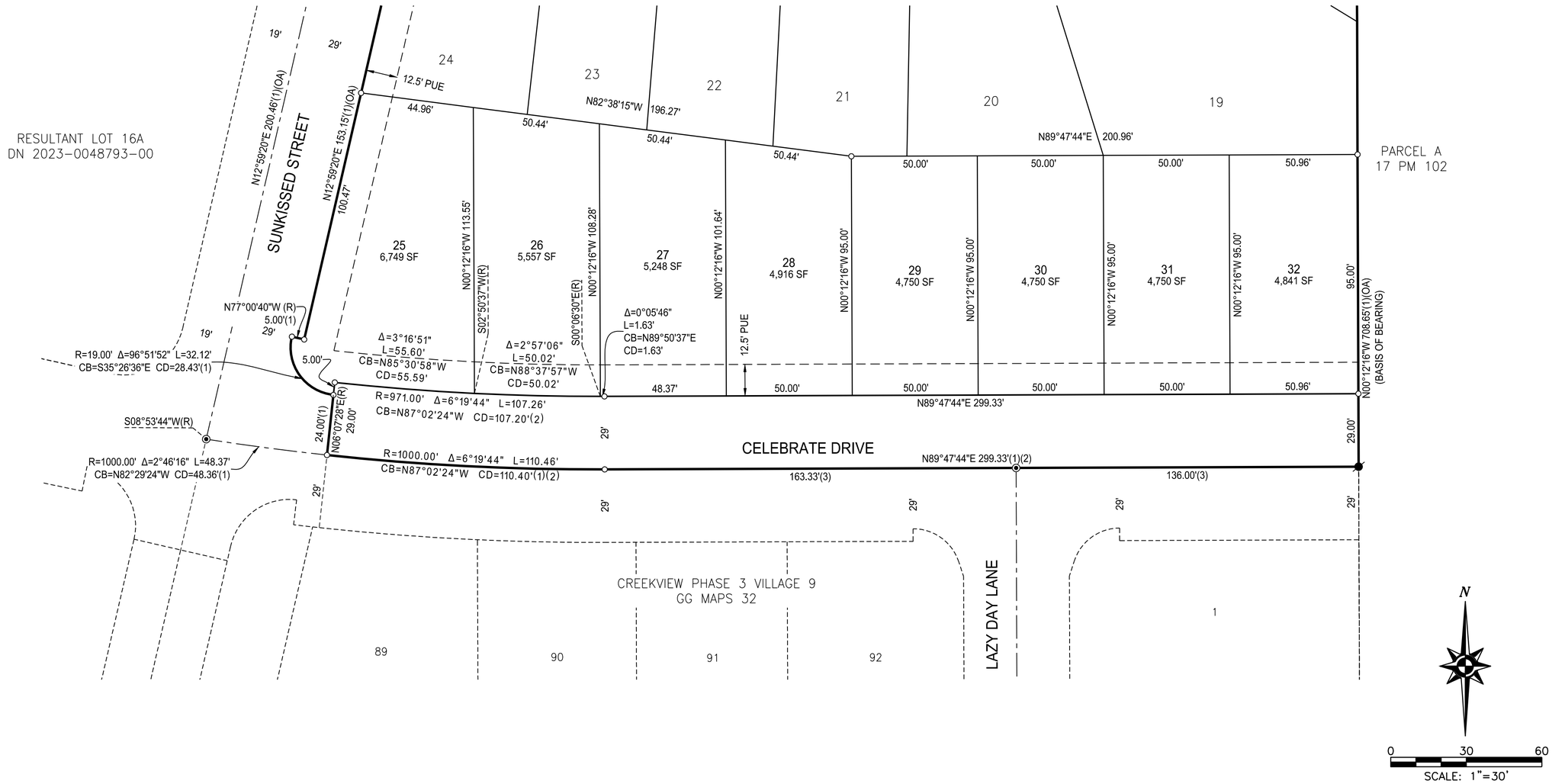

FINAL MAP OF

CREEKVIEW PHASE 4 VILLAGE 8

SUBDIVISION NO. PL14-0522

A PORTION OF LOT 8 AS SHOWN ON THAT CERTAIN FINAL MAP TITLED "CREEKVIEW - PHASE 3 LARGE LOT SUBDIVISION, SUBDIVISION NO. PL20-0201", FILED FOR RECORD ON DECEMBER 2, 2021, IN BOOK FF OF MAPS AT PAGE 84, PLACER COUNTY RECORDS, WITHIN SECTION 14, TOWNSHIP 11 NORTH, RANGE 5 EAST, MOUNT DIABLO MERIDIAN

CITY OF ROSEVILLE • PLACER COUNTY • CALIFORNIA

MACKAY & SOMPS
ENGINEERS PLANNERS SURVEYORS
1025 Creekside Ridge Drive, Suite 150, Roseville, CA 95678 (916) 773-1189

AUGUST 2024

SHEET 5 OF 6

18431.CV.PH4.V8

SEE SHEET 2 FOR NOTES, REFERENCES, BASIS OF BEARINGS AND LEGEND

BOOK_____OF MAPS, PAGE_____

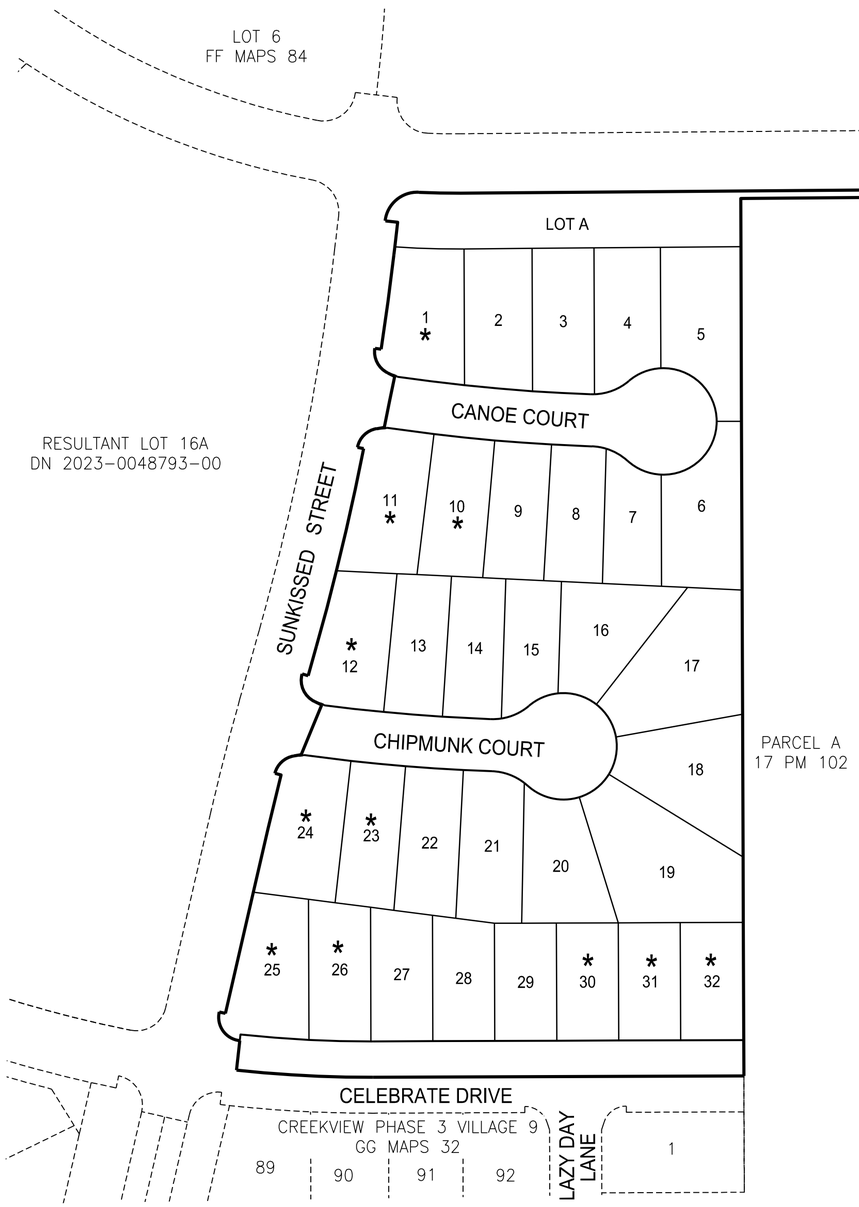

ADDITIONAL INFORMATION FOR INFORMATIONAL PURPOSES ONLY PURSUANT TO SECTION 66434.2 OF THE GOVERNMENT CODE

EACH RESIDENTIAL DWELLING CONSTRUCTED ON ANY OF THE LOTS INDICATED SHALL BE FITTED WITH A SEWER BACKFLOW PREVENTER VALVE AS APPROVED BY THE CITY OF ROSEVILLLE. IT SHALL BE THE RESPONSIBILITY OF THE OWNER OF SAID DWELLING TO MAINTAIN THE VALVE AND PREVENT DAMAGE FROM OCCURRING THERETO. THE CITY OF ROSEVILLE SHALL NOT BE RESPONSIBLE FOR THE MAINTENANCE OR PERFORMANCE OF THE VALVE, AND THE CITY OF ROSEVILLE SHALL NOT BE LIABLE FOR ANY DAMAGE OCCURRING TO ANY SUCH DWELLING OR ITS CONTENTS DUE TO FAILURE OF THE VALVE FOR ANY REASON WHATSOEVER.

LEGEND

* DENOTES SEWER BACKFLOW PREVENTER VALVE REQUIRED ON SANITARY SEWER CONNECTION BY THE CITY OF ROSEVILLE WITH THE BUILDING PERMIT AND MAINTAINED THEREAFTER BY THE OWNER.

N

0 40 80 160

SCALE: 1"=80'

FINAL MAP OF

CREEKVIEW PHASE 4 VILLAGE 8

SUBDIVISION NO. PL14-0522

A PORTION OF LOT 8 AS SHOWN ON THAT CERTAIN FINAL MAP TITLED "CREEKVIEW - PHASE 3 LARGE LOT SUBDIVISION, SUBDIVISION NO. PL20-0201", FILED FOR RECORD ON DECEMBER 2, 2021, IN BOOK FF OF MAPS AT PAGE 84, PLACER COUNTY RECORDS, WITHIN SECTION 14, TOWNSHIP 11 NORTH, RANGE 5 EAST, MOUNT DIABLO MERIDIAN

CITY OF ROSEVILLE • PLACER COUNTY • CALIFORNIA

MACKAY & SOMPS
ENGINEERS PLANNERS SURVEYORS
1025 Creekside Ridge Drive, Suite 150, Roseville, CA 95678 (916) 773-1189

AUGUST 2024

SHEET 6 OF 6

18431.CV.PH4.V8

RESOLUTION NO. 24-286

APPROVING A SUBDIVISION AGREEMENT, BY AND BETWEEN THE CITY OF ROSEVILLE AND ANTHEM UNITED CREEKVIEW DEVELOPMENT LIMITED PARTNERSHIP, AND AUTHORIZING THE CITY MANAGER TO EXECUTE IT ON BEHALF OF THE CITY OF ROSEVILLE

WHEREAS, a subdivision agreement, by and between the City of Roseville and Anthem United Creekview Development Limited Partnership, for the Creekview Phase 4 Village 6 and Creekview Phase 4 Village 8 Subdivisions, has been reviewed by the City Council; and

NOW, THEREFORE, BE IT RESOLVED by the Council of the City of Roseville that said agreement is approved and the City Manager is authorized to execute it on behalf of the City of Roseville.

PASSED AND ADOPTED by the Council of the City of Roseville this____day of _____, 2024, by the following vote on roll call:

AYES COUNCILMEMBERS:

NOES COUNCILMEMBERS:

ABSENT COUNCILMEMBERS:

_____
MAYOR

ATTEST:

_____
City Clerk

RECORDING REQUESTED BY AND WHEN RECORDED, PLEASE RETURN TO:

City Clerk
CITY OF ROSEVILLE
311 Vernon Street
Roseville, CA 95678

Exempt from recording fees
Pursuant to Govt. Code §27383

SUBDIVISION AGREEMENT

CREEKVIEW PHASE 4 VILLAGES 6 & 8

THIS AGREEMENT, made and entered into this ___ day of _____, 20__, by and between the CITY OF ROSEVILLE, a municipal corporation ("CITY"), and Anthem United Creekview Development Limited Partnership, a Washington Limited Partnership, ("SUBDIVIDER"),

W I T N E S S E T H:

WHEREAS, SUBDIVIDER is possessed of a tract(s) of land lying in the City of Roseville, County of Placer, known as "Creekview Phase 4 Villages 6 & 8 Subdivisions" (Subdivision nos. PL20-0201 and PL14-0522; "the Subdivisions"); and

WHEREAS, tentative maps of the Subdivisions were approved by the City Planning Commission on July 22, 2021, and January 29, 2016, and the final maps of the Subdivisions have been approved subject to the execution of this Agreement; and

WHEREAS, the final map for Creekview Phase 4 Village 6 has been filed on the ____ day of _____, 20__ in Book _____ of Parcel/Subdivision Maps at Page _____ in the Official Records, Placer County Recorder, file no. _____; and the final map for Creekview Phase 4 Village 8 has been filed on the ____ day of _____, 20__ in Book _____ of Parcel/Subdivision Maps at Page _____ in the Official Records, Placer County Recorder, file no. _____; and

WHEREAS, Section 18.20.110 of the Roseville Municipal Code, regulating the subdivision of land in the City, requires that SUBDIVIDER shall execute and file an agreement between itself and CITY relating to the improvements to be made in a subdivision, prior to the approval by the City Council of the final map(s).

NOW, THEREFORE, the parties agree as follows:

1. Rights-of-Way. Except as otherwise provided by this Agreement, CITY rejects all lands, right-of-ways, and easements offered for dedication on the final maps of the Subdivisions. All such offers shall, however, remain open, and shall constitute irrevocable offers of dedication in accordance with Government Code Section 66477.2. All such offers may be accepted by CITY in its sole discretion at any later date without further notice to SUBDIVIDER as provided by law.

By way of explanation only, it is the current intention of CITY to accept all or part of such irrevocable offers to dedicate upon acceptance of the improvements called for in this Agreement.

2. Improvements - Time Limit. SUBDIVIDER agrees to cause all improvements to be made and constructed in the Subdivisions to fully comply with the requirements of the

Roseville Municipal Code and the Subdivision Map Act of the State of California according to the improvement plans for the Subdivisions prepared by MacKay & Somps, dated January 10, 2024 and approved by the City Engineer and including any changes or alterations to such improvements required by the City Engineer, and to install, on or before December 31, 2025, such survey monuments as may be required by the City Engineer ("the Work"). SUBDIVIDER agrees to pay for any materials, provisions or other supplies used in, upon, for or about the performance of the Work, or for any work or labor of any kind done in connection with the Work, or for any amounts due under the Unemployment Insurance Act with respect to such work or labor.

SUBDIVIDER agrees to complete all of the Work on or before twenty-four (24) months from the date of this Agreement. If in the opinion of the City Engineer of CITY, an extension of this Agreement is not detrimental to the public welfare, he or she is, in his or her sole discretion, hereby authorized to extend the time within which the Work shall be completed for a period not to exceed twelve (12) months. Upon a written application made by SUBDIVIDER, further extensions, not to exceed an additional six (6) months, shall be reviewed and approved at the discretion of the City Engineer of CITY. Any such application extension request by SUBDIVIDER shall fully state the grounds and facts relied upon for the granting of additional extensions.

In the event that SUBDIVIDER shall fail to complete the Work within the time provided by this Agreement, CITY may, in its sole discretion and in addition to any other remedy provided in this Agreement or by law, enter upon the Subdivisions and complete the Work and recover the full cost and expense of such construction from SUBDIVIDER, SUBDIVIDER's successors and assigns, or from the then owner of the Subdivisions, and/or

place a lien upon the Subdivisions for such cost and expense.

If at anytime prior to the expiration of the time provided by this Agreement the City Engineer of CITY determines that a safety hazard exists within an existing public right-of-way, the City Engineer shall give written notice to SUBDIVIDER to eliminate the safety hazard. If SUBDIVIDER fails to eliminate the safety hazard within five (5) calendar days of the written notice, CITY may, in its sole discretion and in addition to any other remedy provided in this Agreement or by law, eliminate the safety hazard and recover the full cost and expense of such work from SUBDIVIDER, SUBDIVIDER's successors and assigns, or from the then owner of the Subdivisions, and/or place a lien upon the Subdivisions for such cost and expense.

3. Acquisition and Dedication of Easements or Rights-of-Ways. If any of the Work is to be constructed or installed on land not within the Subdivisions or already existing public right-of-way, no construction or installation shall be commenced before:

a. The irrevocable offer of dedication or conveyance to CITY of appropriate right-of-ways, easements or other interest in real property, and appropriate authorization from the property owner to allow construction or installation of the improvements or work; or

b. The issuance of an order of possession by a court of competent jurisdiction pursuant to the State Eminent Domain Law. SUBDIVIDER shall comply in all respects with any such order of possession.

Nothing in this Section 3 shall be construed as authorizing or granting an extension of time to SUBDIVIDER for completion of the Work.

4. Inspection Fees and Costs. The City Engineer shall inspect all of the Work improvements made in the Subdivisions to see that they comply with CITY's subdivision regulations and specifications. SUBDIVIDER shall deposit the estimated inspection fee and

reimburse CITY for the cost of such inspections in accordance with Roseville Municipal Code section 18.20.070.

5. Securities.

a. SUBDIVIDER shall file with this Agreement two (2) improvement securities as set forth in Roseville Municipal Code Sections 18.20.150 and 18.20.160. Each security shall be in the amount of one hundred percent (100%) of the total estimated cost of the Work as determined by the City Engineer which amount is the sum of $2,375,746.70. One improvement security shall secure faithful performance of this Agreement as required by Section 66499.3(a) of the Government Code of the State of California (the "faithful performance" security). The second improvement security shall, as required by Section 66499.3(b) of the Government Code of the State of California, secure the obligations set forth in Title 1 (commencing with Section 8000) of Part 6 of Division 4 of the Civil Code of the State of California for payment to the contractor, his subcontractors and to persons renting equipment or furnishing labor or materials to them for the Work (the "payment security"). The improvement securities required under this paragraph shall also secure placement of monumentation and guarantee payment therefor as provided by California Government Code section 66496.

b. SUBDIVIDER shall also file with this Agreement a "guarantee and warranty security" in the amount of ten percent (10%) of the City Engineer's estimated cost of the Work as set forth in Section 18.20.170 of the Roseville Municipal Code to guarantee and warrant the Work for a period of one year following its completion and acceptance against any defective work or labor done, or defective materials furnished, as required by Section 66499(a)(5) of the Government Code of the State of California. The guarantee and warranty security shall be released upon SUBDIVIDER's request following expiration of the warranty

period and subject to the reasonable determination of the City Engineer that SUBDIVIDER's warranty obligations have been satisfied.

c. Any bonds submitted as security pursuant to this section shall be executed by a surety company authorized to transact a surety business in the State of California. All required securities shall be in a form approved by the City Attorney of CITY.

6. Successors and Assigns – Covenant Running with the Land. This Agreement shall inure to the benefit of, and be binding upon, the successors and assigns of the respective parties. It shall be recorded in the Office of the Recorder of Placer County concurrently with the final maps of the Subdivisions, and shall constitute a covenant running with the land and an equitable servitude upon the real property within the Subdivisions.

7. Acceptance of Improvements Upon Completion. Upon satisfactory completion of the Work, in accordance with this Agreement, CITY agrees to accept the Work and its improvements and the offers of dedication described in paragraph 1, subject to the provisions of paragraphs 1 and 10 of this Agreement.

8. Notice Regarding Construction. SUBDIVIDER shall notify the City Engineer of CITY in writing three (3) days prior to the commencement of construction of the Work.

9. Subdivider's Obligation to Warn Public During Construction. Until final acceptance of the Work, SUBDIVIDER shall give good and adequate warning to the public of each and every dangerous condition which may exist in the Work, and will take all reasonable actions to protect the public from any such dangerous condition.

10. Warranty.

a. SUBDIVIDER guarantees and warrants the public improvements which constitute the Work required by this Agreement, and agrees to remedy any defects in the

improvements or the Work arising from faulty or defective materials or construction of said improvements or the Work occurring within twelve (12) months after their acceptance by CITY. SUBDIVIDER agrees to permit inspection of all improvements in the Subdivisions by the City Engineer of CITY for such period, and to reimburse CITY for the cost of such inspections.

b. If, within the warranty period, the Work or improvement or any part of the Work done, furnished, installed, or constructed fails to fulfill any of the requirements of this Agreement or the improvement plans and specifications, SUBDIVIDER shall, without delay or cost to CITY, repair, replace or reconstruct any defective or otherwise unsatisfactory part or parts of the Work. CITY may, at its sole option, perform such repair or replacement itself if SUBDIVIDER has failed to commence such repair within twenty (20) days after CITY has mailed written notice of default to SUBDIVIDER and to SUBDIVIDER'S Surety. In such event, SUBDIVIDER agrees to pay the cost of such repair and replacement by CITY and CITY may, at its option, recover such cost as a lien against the Subdivisions should the cost exceed the inspection fee deposited pursuant to paragraph 4 of this Agreement.

Should CITY determine that the public safety requires repairs or replacements to be made before SUBDIVIDER can be notified, CITY may, in its sole discretion, make the necessary repairs or replacement or perform the necessary work. SUBDIVIDER shall pay to CITY the cost of such repairs and CITY may at its option recover such cost as a lien against the Subdivision.

11. Indemnification. To the fullest extent allowed by law, SUBDIVIDER shall defend, indemnify, and save and hold harmless CITY, its officers, agents, employees and volunteers from any claims, suits or actions of every name, kind and description brought forth, or on account of, injuries to or death of any person (including but not limited to workers and the

public), or damage to property, resulting from or arising out of SUBDIVIDER 's willful misconduct or negligent act or omission while engaged in the performance of obligations or exercise of rights created by this Agreement, except those matters arising from CITY's sole or active negligence or willful misconduct. The parties intend that this provision shall be broadly construed.

SUBDIVIDER's responsibility for such defense and indemnity obligations shall survive the termination or completion of this Agreement for the full period of time allowed by law. The defense and indemnity obligations of this Agreement are undertaken in addition to, and shall not in any way be limited by, the insurance obligations contained in this Agreement.

12. Insurance. SUBDIVIDER agrees to continuously maintain, in full force and effect, at a minimum the following policies of insurance during the term of this Agreement.

COVERAGE	LIMITS OF LIABILITY
General Liability	$2,000,000 per occurrence $4,000,000 aggregate Personal Injury: $2,000,000 per occurrence $4,000,000 aggregate
Automobile Liability	$1,000,000 combined single limit
Workers' Compensation	Statutory

a. Form. SUBDIVIDER shall submit a certificate evidencing such coverage for the period covered by this Agreement in a form satisfactory to Risk Management and the City Attorney, prior to undertaking any work hereunder. Any insurance written on a claims made basis is subject to the approval of Risk Management and the City Attorney.

b. Additional Insureds. SUBDIVIDER shall also provide a separate endorsement form or section of the policy showing CITY, its officers, agents, employees and

volunteers as additional insureds for each type of coverage, except for Workers' Compensation, for ongoing and completed operations. Such insurance shall specifically cover the contractual liability of SUBDIVIDER. The additional insured coverage under the SUBDIVIDER's policy shall be primary and noncontributory, as evidenced by a separate endorsement or section of the policy, and shall not seek contribution from CITY's insurance or self-insurance. In addition, the additional insured coverage shall be at least as broad as the Insurance Services Office ("ISO") CG 20 01 Endorsement. Any available insurance proceeds in excess of the specified minimum insurance coverage requirements and limits shall be available to the additional insureds. Furthermore, the requirements for coverage and limits shall be: (1) the minimum coverage and limits specified in this Agreement; or (2) the full coverage and maximum limits of any insurance proceeds available to the named insureds, whichever is greater.

c. Cancellation/Modification. SUBDIVIDER shall provide ten (10) days written notice to CITY prior to cancellation or modification of any insurance required by this Agreement.

d. Umbrella/Excess Insurance. The limits of insurance required in this Agreement may be satisfied by a combination of primary and excess insurance. Any excess insurance shall contain or be endorsed to contain a provision that such coverage shall also apply on a primary and noncontributory basis for the benefit of CITY (if agreed to in a written contract) before CITY's own insurance shall be called upon to protect it as a named insured.

e. Self-Insured Retentions. All self-insured retentions ("SIR") must be disclosed to Risk Management for approval and shall not reduce the limits of liability. Policies containing any SIR provision shall provide or be endorsed to provide that the SIR may be satisfied by either the named insured or CITY. CITY reserves the right to obtain a full

certified copy of any insurance policy and endorsements. The failure to exercise this right shall not constitute a waiver of such right.

f. Waiver of Subrogation. SUBDIVIDER hereby agrees to waive subrogation which any insurer of SUBDIVIDER may acquire from SUBDIVIDER by virtue of the payment of any loss under a Workers Compensation, Commercial General Liability or Automobile Liability policy. All Workers Compensation, Commercial General Liability and Automobile Liability policies shall be endorsed with a waiver of subrogation in favor of CITY, its officers, agents, employees and volunteers for all worked performed by SUBDIVIDER, its employees, agents and subcontractors.

g. Liability/Remedies. Insurance coverage in the minimum amounts set forth herein shall not be construed to relieve SUBDIVIDER of liability in excess of such coverage, nor shall it preclude CITY from taking such other actions as are available to it under any other provisions of this Agreement or law.

13. Irrevocability of Security. The improvement securities furnished pursuant to paragraph 5 shall be irrevocable, shall not be limited as to time (except as to the one-year guarantee and warranty period specified in paragraph 10) and shall provide that they may be released, in whole or part, only upon the written approval of the City Engineer of CITY.

14. Attorney's Fees; Venue; Governing Law. Any action by any party to this Agreement, or any action concerning a security furnished pursuant to paragraph 5, shall be brought in the appropriate court of competent jurisdiction within the County of Placer, State of California, notwithstanding any other provision of law which may provide that such action may be brought in some other location. In the event it becomes necessary for either party to bring an action with respect to enforcement of the provisions of this Agreement, or the security therefor,

the prevailing party in such action shall be awarded a reasonable attorney's fee, as may be determined by the Court. This Agreement shall be governed by and construed in accordance with the laws of the State of California.

15. Release of Faithful Performance Security. Release of faithful performance security shall be in compliance with and pursuant to the procedures set forth in Government Code Section 66499.7. Upon the completion of all secured Work by SUBDIVIDER and written acceptance of that completed Work by CITY, and the furnishing of the warranty security as required by paragraph 5(b), the City Engineer shall authorize the release of the remaining faithful performance security.

16. Release of Payment Security. Thirty-five (35) days after a notice of completion is recorded with respect to the Work, the City Engineer of CITY may authorize the release of the payment security, in the event that no claims have been filed against said security. In the event that claims or actions are filed against the security, the City Engineer may release so much of such security as is in excess of the total of the claims made against it, plus a reasonable amount of costs and attorney's fees.

17. Automatic Termination Upon Completion and Sale of Residential Unit. This Agreement and any lien pursuant hereto shall automatically be terminated, without any further action by either party or need to record any additional document, with respect to any single-family residential lot within a parcel designated by the Specific Plan for residential use, upon completion of construction and issuance by the City of a final inspection for a dwelling unit upon such residential lot and conveyance of such improved residential lot to a bona-fide good faith purchaser thereof. In connection with its issuance of a final inspection for such improved lot, City shall confirm that: (i) all improvements which are required to serve the lot, as determined by

City, have been accepted by City; (ii) the lot is included within the Maintenance CFD as required by the applicable Development Agreement or other financing mechanism acceptable to the City, to the extent required hereby; and (iii) if and to the extent applicable to such lot, an affordable purchase or rental housing agreement has been recorded on the lot. Termination of this Agreement for any such residential lot as provided for in this section shall not in any way be construed to terminate or modify any assessment district or Mello-Roos Community Facilities District lien affecting such lot at the time of termination.

18. Failure of Performance. In addition to any other remedies provided in this Agreement or by law, in the event SUBDIVIDER fails to perform one or more of the covenants or conditions of this Agreement, CITY shall have recourse to the security given to guarantee the performance of such acts. CITY may do, or cause to be done, those acts required of SUBDIVIDER, and shall have recourse against so much of the security as is necessary to discharge the responsibility of SUBDIVIDER. In the event CITY seeks recourse against a security, CITY shall also have recourse against SUBDIVIDER for any and all amounts necessary to complete the obligations of SUBDIVIDER in the event the security is insufficient to pay such amounts. All administrative costs, including reasonable attorney's fees pursuant to Section 66499.4 of the Government Code, incurred by CITY, in addition to the costs of the improvements, shall be a proper charge against the security and SUBDIVIDER.

19. Integration. This Agreement is an integrated agreement. It supersedes all prior negotiations, representations, or agreements, either written or oral.

20. Modification. This Agreement and each provision contained herein may be waived, amended, supplemented or eliminated only by mutual written agreement of the parties.

21. Notices. Any notices sent to the parties relating to this Agreement shall be sent by first class mail, postage prepaid or delivered to the following addresses:

Marc Stout, City Engineer
City of Roseville
311 Vernon Street
Roseville, CA 95678

Jason Gray, Vice President Land Development and Entitlements
Anthem Properties
1410 Rocky Ridge Drive, Suite 200
Roseville, CA 95661

Either party may amend its address by giving written notice to the other.

22. Severability. If any of the provisions contained in this Agreement are for any reason held invalid or unenforceable, such holding shall not affect the remaining provisions or the validity and enforceability of the Agreement as a whole.

IN WITNESS WHEREOF, the City of Roseville, a municipal corporation, has authorized the execution of this Agreement in duplicate by its City Manager and attestation by its City Clerk under authority of Resolution No. ____, adopted by the Council of the City of Roseville on the ___ day of _____, 20__, and SUBDIVIDER has caused this Agreement to be executed.

CITY OF ROSEVILLE, a
municipal corporation,

BY:_____
DOMINICK CASEY
City Manager

ANTHEM UNITED
CREEKVIEW Development
Limited Partnership, a Washington
Limited Partnership

BY:_____
Print name: Brian Moore
Title: Vice President

[SIGNATURES CONTINUED ON FOLLOWING PAGE]

ATTEST:

BY:_____
CARMEN AVALOS
City Clerk

APPROVED AS TO FORM:

BY:_____
MICHELLE SHEIDENBERGER
City Attorney

APPROVED AS TO SUFFICIENCY:

BY:_____
MARC STOUT
City Engineer

and

BY:_____
Print name: Matt Gustus
Title: Vice President

(NOTARIZATION REQUIRED)

CALIFORNIA CERTIFICATE OF ACKNOWLEDGMENT

A notary public or other officer completing this certificate verifies only the identity of the individual who signed the document to which this certificate is attached, and not the truthfulness, accuracy, or validity of that document.

State of California)

County of Placer)

On 4/2/24 before me, Terri Susan Sublett, Notary Public,
(here insert name and title of the officer)

personally appeared BRIAN MOORE & Matt Gustus

who proved to me on the basis of satisfactory evidence to be the person(s) whose name(s) is/are subscribed to the within instrument and acknowledged to me that he/she/they executed the same in his/her/their authorized capacity(ies), and that by his/her/their signature(s) on the instrument the person(s), or the entity upon behalf of which the person(s) acted, executed the instrument.

I certify under PENALTY OF PERJURY under the laws of the State of California that the foregoing paragraph is true and correct.

WITNESS my hand and official seal.

NRO1 TERRI SUSAN SUBLETT COMM. #2431193 Notary Public - California Placer County My Comm. Expires Dec. 16, 2026 NRO1

Signature Terri Susan Sublett (Seal)

Optional Information

Although the information in this section is not required by law, it could prevent fraudulent removal and reattachment of this acknowledgment to an unauthorized document and may prove useful to persons relying on the attached document.

Description of Attached Document

The preceding Certificate of Acknowledgment is attached to a document titled/for the purpose of Subdivision Improvement Agreement - Creekview Villages 6&8, containing 14 pages, and dated N/A.

The signer(s) capacity or authority is/are as:

- ☐ Individual(s)
- ☐ Attorney-in-Fact
- ☑ Corporate Officer(s) VICE PRESIDENTS
  Title(s)
- ☐ Guardian/Conservator
- ☐ Partner - Limited/General
- ☐ Trustee(s)
- ☐ Other:

representing:
Name(s) of Person(s) or Entity(ies) Signer is Representing

Additional Information

Method of Signer Identification

Proved to me on the basis of satisfactory evidence:
○ form(s) of identification ○ credible witness(es)

Notarial event is detailed in notary journal on:
Page # Entry #

Notary contact:

Other

☐ Additional Signer(s) ☐ Signer(s) Thumbprint(s)

☐

© Copyright 2007-2021 Notary Rotary, PO Box 41400, Des Moines, IA 50311-0507. All Rights Reserved. Item Number 101772. Please contact your Authorized Reseller to purchase copies of this form.

COUNCIL COMMUNICATION

CC #: 3486
File #: 0400-04-13-1 & 0400-07

Title:	Creekview Phase 4 Village 7 Subdivision - Final Map and Subdivision Agreement
Contact:	Jeff Hendrix 916-774-5463 jhendrix@roseville.ca.us

Meeting Date: 8/21/2024
Item #: 7.10.

RECOMMENDATION TO COUNCIL

It is recommended that the City Council take the following actions:

1. Approve the final map on file with the City Clerk and accept on behalf of the public, the public utility easements, and accept, subject to improvement, Lots A, B and C and the rights of way offered thereon; and
2. Adopt the attached resolution approving the Subdivision Agreement and authorize the City Manager to execute the agreement on behalf of the City.

BACKGROUND

The Development Services Department, Engineering Division, has reviewed the subject final map and found that it is in compliance with the Subdivision Map Act and the City's Subdivision Ordinance and all conditions of the tentative map have been met. This map will create 74 residential lots and 3 public landscape lots.

FISCAL IMPACT

There is no fiscal impact to the City's General Fund associated with this approval.

ENVIRONMENTAL REVIEW

Development of the Creekview Phase 4 Village 7 project was previously evaluated in the Creekview Specific Plan EIR (certified September 19, 2012 SCH No. 2008032017), and identified in the associated Creekview Specific Plan. Construction of the Creekview Phase 4 Village 7 project is found to be within the scope of the project covered by the Creekview Specific Plan EIR, and is therefore exempt from CEQA pursuant to Section 15182. As discussed in the Specific Plan EIR, the EIR provides environmental analyses of community infrastructure and facilities, including residential subdivisions. Because the project is consistent with the Creekview

Specific Plan EIR and Specific Plan, no new effects would be expected to occur and all applicable mitigation measures from the Creekview Specific Plan EIR will be implemented during the design and construction of the Creekview Phase 4 Village 7 project. Because the proposed project meets the requirements identified in the State CEQA Guidelines Section 15183, no additional CEQA review is required.

CITY COUNCIL STRATEGIC PLAN/OVERARCHING GOALS

Goal F - Invest in well-planned infrastructure and growth

Respectfully Submitted,

Jeff Hendrix, Associate Engineer

Mike Isom, Development Services Director

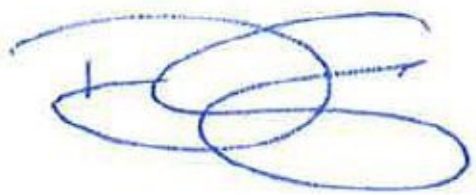

_____

Dominick Casey, City Manager

ATTACHMENTS:

Description

Vicinity Map

Map

Resolution 24-287

Subdivision Agreement

CREEKVIEW PHASE 4 VILLAGE 7

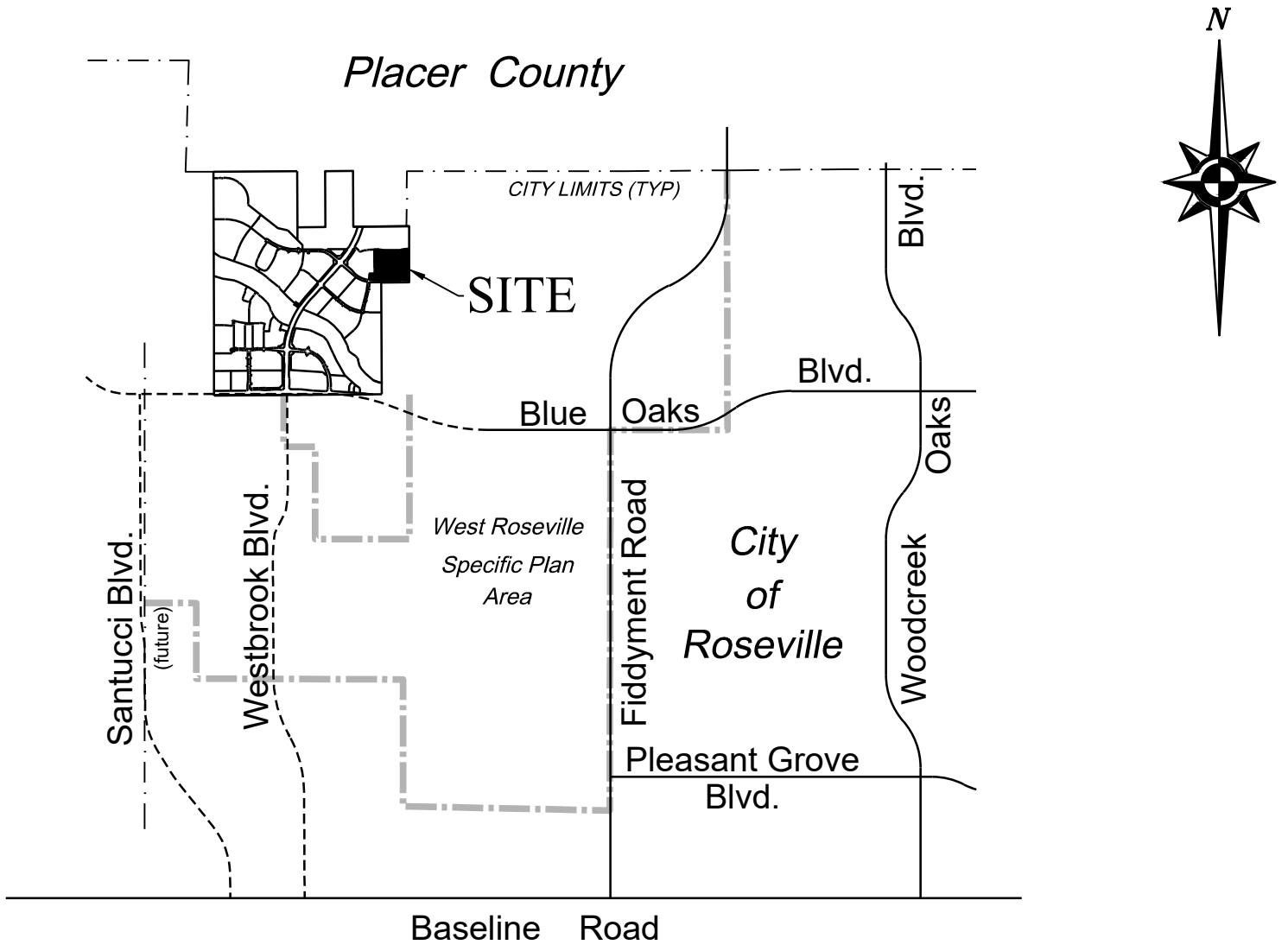

VICINITY MAP

BOOK_____ OF MAPS, PAGE_____

OWNER'S STATEMENT

THE UNDERSIGNED HEREBY CERTIFY THAT THEY ARE THE ONLY PERSONS HAVING ANY RECORD TITLE INTEREST IN THE REAL PROPERTY INCLUDED WITHIN THE SUBDIVISION SHOWN UPON THIS FINAL MAP OF "CREEKVIEW PHASE 4 VILLAGE 7" AND THEY HEREBY CONSENT TO THE PREPARATION AND RECORDATION OF THIS FINAL MAP AND HEREBY OFFER FOR DEDICATION AND DO HEREBY DEDICATE FOR SPECIFIC PURPOSES THE FOLLOWING:

THE REAL PROPERTY DESCRIBED BELOW IS DEDICATED AS EASEMENTS FOR PUBLIC PURPOSES:

(A) A PUBLIC EASEMENT FOR THE INSTALLATION AND MAINTENANCE OF, BUT NOT LIMITED TO ELECTROLIERS, WATER AND GAS PIPES, SEWER AND DRAINAGE PIPES, AND FOR UNDERGROUND WIRE AND CONDUITS FOR ELECTRIC, TELEPHONE AND TELEVISION SERVICES AND TRAFFIC CONTROL APPURTENANCES TOGETHER WITH ANY AND ALL APPURTENANCES PERTAINING THERETO ON, OVER, UNDER AND ACROSS LOTS A, B, AND C, THE STREETS SHOWN HEREON AS LEAP FROG LOOP, SALAMANDER CIRCLE, CANTEEN DRIVE, AND WHISTLING PINE WAY AND THOSE STRIPS OF LAND LYING CONTIGUOUS TO THE RIGHTS-OF-WAY AS SHOWN HEREON AND DESIGNATED "PUE" (PUBLIC UTILITY EASEMENT).

THE REAL PROPERTY DESCRIBED BELOW IS DEDICATED IN FEE FOR PUBLIC PURPOSES:

(A) AS PUBLIC RIGHTS-OF-WAY (INCLUDING ALL IMPROVEMENTS THEREON) THE STREETS SHOWN HEREON AS LEAP FROG LOOP, SALAMANDER CIRCLE, CANTEEN DRIVE, AND WHISTLING PINE WAY.

(B) LOTS A, B, AND C AS SHOWN HEREON TO THE CITY OF ROSEVILLE FOR LANDSCAPING AND AS PUBLIC RIGHTS-OF-WAY.

ANTHEM UNITED CREEKVIEW DEVELOPMENTS LIMITED PARTNERSHIP,
A WASHINGTON LIMITED PARTNERSHIP

BY: _____

_____

NOTARY'S ACKNOWLEDGMENT

A NOTARY PUBLIC OR OTHER OFFICER COMPLETING THIS CERTIFICATE VERIFIES ONLY THE IDENTITY OF THE INDIVIDUAL WHO SIGNED THE DOCUMENT TO WHICH THIS CERTIFICATE IS ATTACHED, AND NOT THE TRUTHFULNESS, ACCURACY OR VALIDITY OF THAT DOCUMENT.

STATE OF CALIFORNIA

COUNTY OF _____

ON_____ BEFORE ME,_____, A NOTARY PUBLIC

PERSONALLY APPEARED _____
WHO PROVED TO ME ON THE BASIS OF SATISFACTORY EVIDENCE TO BE THE PERSON(S) WHOSE NAME(S) IS/ARE SUBSCRIBED TO THE WITHIN INSTRUMENT AND ACKNOWLEDGED TO ME THAT HE/SHE/THEY EXECUTED THE SAME IN HIS/HER/THEIR AUTHORIZED CAPACITY(IES), AND THAT BY HIS/HER/THEIR SIGNATURE(S) ON THE INSTRUMENT THE PERSON(S), OR THE ENTITY UPON BEHALF OF WHICH THE PERSON(S) ACTED, EXECUTED THE INSTRUMENT.

I CERTIFY UNDER PENALTY OF PERJURY UNDER THE LAWS OF THE STATE OF CALIFORNIA THAT THE FOREGOING PARAGRAPH IS TRUE AND CORRECT.

WITNESS MY HAND AND OFFICIAL SEAL.

_____
SIGNATURE PRINTED NAME

MY PRINCIPAL PLACE OF BUSINESS IS _____COUNTY

MY COMMISSION EXPIRES: _____ MY COMMISSION NUMBER: _____

TRUSTEE'S STATEMENT

FIRST AMERICAN TITLE INSURANCE COMPANY, AS TRUSTEE UNDER THAT CERTAIN CONSTRUCTION DEED OF TRUST AND SECURITY AGREEMENT RECORDED ON JUNE 29, 2023, AS INSTRUMENT NO. 2023-0033905, ORPC AND MODIFIED BY INSTRUMENT NO. 2023-0033906 ORPC, HEREBY CONSENTS TO THE RECORDING OF THIS MAP AND THE SUBDIVISION OF THE LANDS SHOWN HEREON.

BY: _____

_____

_____

NOTARY'S ACKNOWLEDGMENT

A NOTARY PUBLIC OR OTHER OFFICER COMPLETING THIS CERTIFICATE VERIFIES ONLY THE IDENTITY OF THE INDIVIDUAL WHO SIGNED THE DOCUMENT TO WHICH THIS CERTIFICATE IS ATTACHED, AND NOT THE TRUTHFULNESS, ACCURACY OR VALIDITY OF THAT DOCUMENT.

STATE OF CALIFORNIA

COUNTY OF _____

ON_____ BEFORE ME,_____, A NOTARY PUBLIC

PERSONALLY APPEARED _____
WHO PROVED TO ME ON THE BASIS OF SATISFACTORY EVIDENCE TO BE THE PERSON(S) WHOSE NAME(S) IS/ARE SUBSCRIBED TO THE WITHIN INSTRUMENT AND ACKNOWLEDGED TO ME THAT HE/SHE/THEY EXECUTED THE SAME IN HIS/HER/THEIR AUTHORIZED CAPACITY(IES), AND THAT BY HIS/HER/THEIR SIGNATURE(S) ON THE INSTRUMENT THE PERSON(S), OR THE ENTITY UPON BEHALF OF WHICH THE PERSON(S) ACTED, EXECUTED THE INSTRUMENT.

I CERTIFY UNDER PENALTY OF PERJURY UNDER THE LAWS OF THE STATE OF CALIFORNIA THAT THE FOREGOING PARAGRAPH IS TRUE AND CORRECT.

WITNESS MY HAND AND OFFICIAL SEAL.

_____
SIGNATURE PRINTED NAME

MY PRINCIPAL PLACE OF BUSINESS IS _____COUNTY

MY COMMISSION EXPIRES: _____ MY COMMISSION NUMBER: _____

SURVEYOR'S STATEMENT

THIS MAP OF "CREEKVIEW PHASE 4 VILLAGE 7" WAS PREPARED BY ME OR UNDER MY DIRECTION AND IS BASED UPON A FIELD SURVEY IN CONFORMANCE WITH THE REQUIREMENTS OF THE SUBDIVISION MAP ACT AND LOCAL ORDINANCE AT THE REQUEST OF ANTHEM UNITED CREEKVIEW DEVELOPMENTS LIMITED PARTNERSHIP, IN JANUARY, 2019, I HEREBY STATE THAT THE SURVEY IS TRUE AND COMPLETE AS SHOWN, THAT ALL THE MONUMENTS ARE OF THE CHARACTER AND OCCUPY THE POSITIONS INDICATED OR THAT THEY WILL BE SET IN THOSE POSITIONS BEFORE DECEMBER 31, 2025, AND THAT THE MONUMENTS ARE, OR WILL BE, SUFFICIENT TO ENABLE THE SURVEY TO BE RETRACED, AND THAT THIS FINAL MAP SUBSTANTIALLY CONFORMS TO THE CONDITIONALLY APPROVED TENTATIVE MAP.

MACKAY & SOMPS CIVIL ENGINEERS, INC.

BY: _____
PEDRO JARQUIN., PLS 8268
EXPIRATION DATE: DECEMBER 31, 2025

DATE: _____

CITY ENGINEER'S STATEMENT

I HEREBY STATE THAT I HAVE EXAMINED THIS FINAL MAP OF "CREEKVIEW PHASE 4 VILLAGE 7" AND FIND IT TO BE SUBSTANTIALLY THE SAME AS THE TENTATIVE MAP ON FILE AND ANY APPROVED ALTERATIONS THEREOF; THAT ALL PROVISIONS OF THE SUBDIVISION MAP ACT AND ALL APPLICABLE CITY ORDINANCES HAVE BEEN COMPLIED WITH.

_____ DATE: _____
MARC STOUT, R.C.E. 69879
CITY ENGINEER, CITY OF ROSEVILLE
LICENSE EXPIRES: SEPTEMBER 30, 2024

I HEREBY STATE THAT I AM SATISFIED THIS FINAL MAP OF "CREEKVIEW PHASE 4 VILLAGE 7" IS TECHNICALLY CORRECT.

FOR MARC STOUT, CITY ENGINEER, CITY OF ROSEVILLE

_____ DATE: _____
TIMOTHY G. BLAIR, PLS 8278
EXPIRES DECEMBER 31, 2025

CITY CLERK'S STATEMENT

I HEREBY CERTIFY THAT THE CITY COUNCIL, CITY OF ROSEVILLE, HAS APPROVED THIS FINAL MAP OF "CREEKVIEW PHASE 4 VILLAGE 7", AND HAS ACCEPTED ON BEHALF OF THE PUBLIC, THE PUBLIC UTILITY EASEMENTS OFFERED HEREON FOR DEDICATION AND HAS ACCEPTED, SUBJECT TO IMPROVEMENT, LOTS A, B, AND C AND THE RIGHTS-OF-WAY OFFERED HEREON FOR DEDICATION, AND HEREBY APPROVES THE ABANDONMENT OF THE EASEMENTS LISTED WITHIN NOTE 5 ON SHEET 2.

_____
CITY CLERK, CITY OF ROSEVILLE

DATE: _____ BY: _____
ASSISTANT CITY CLERK

RECORDER'S STATEMENT

FILED THIS _____ DAY OF _____, 2024, AT _____ .M. IN BOOK _____ OF MAPS, AT PAGE _____, IN THE OFFICE OF THE PLACER COUNTY RECORDER, AT THE REQUEST OF MACKAY & SOMPS CIVIL ENGINEERS, INC.

_____ DOCUMENT NO.: _____
RECORDER OF PLACER COUNTY
STATE OF CALIFORNIA

BY:_____ FEE: $ _____
DEPUTY

FINAL MAP OF

CREEKVIEW PHASE 4 VILLAGE 7

SUBDIVISION NO. PL20-0201

LOT 7 AS SHOWN ON THAT CERTAIN FINAL MAP TITLED "CREEKVIEW - PHASE 3 LARGE LOT SUBDIVISION, SUBDIVISION NO. PL20-0201", FILED FOR RECORD ON DECEMBER 2, 2021, IN BOOK FF OF MAPS AT PAGE 84, PLACER COUNTY RECORDS, WITHIN SECTION 14, TOWNSHIP 11 NORTH, RANGE 5 EAST, MOUNT DIABLO MERIDIAN

CITY OF ROSEVILLE • PLACER COUNTY • CALIFORNIA

MACKAY & SOMPS
ENGINEERS PLANNERS SURVEYORS
1025 Creekside Ridge Drive, Suite 150, Roseville, CA 95678 (916) 773-1189

AUGUST 2024

18431.CV.PH4.V7

BOOK_____OF MAPS, PAGE_____

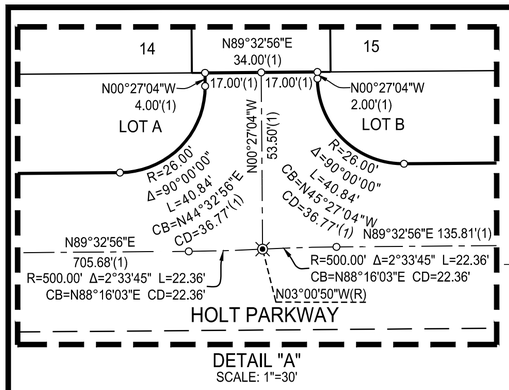

DETAIL "A"
SCALE: 1"=30'

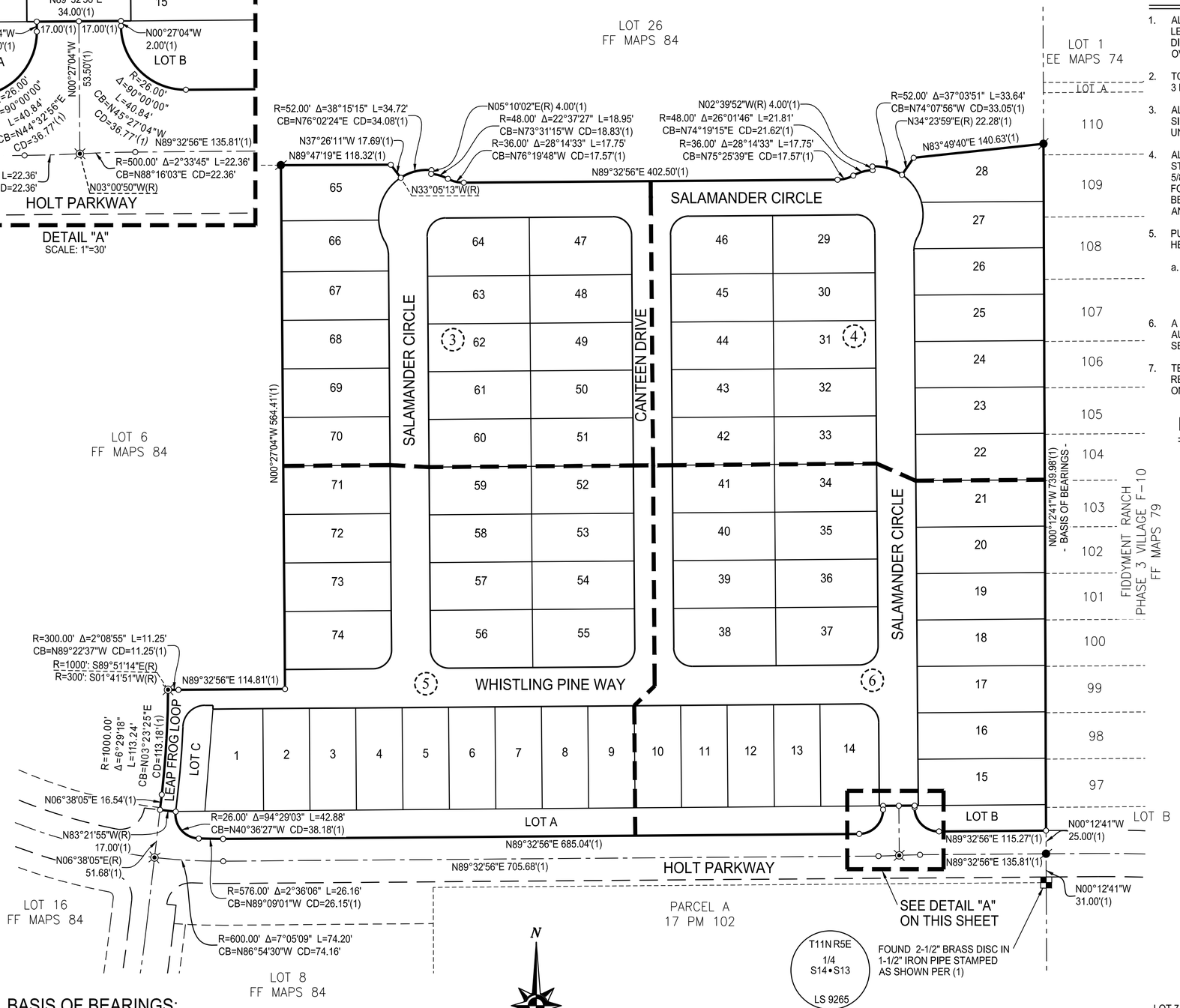

NOTES

1. ALL CURVES ARE DIMENSIONED WITH RADIUS, DELTA, ARC LENGTH, CHORD BEARING AND CHORD LENGTH. DISTANCES SHOWN HEREON ARE IN FEET AND DECIMALS THEREOF AND ARE "GROUND" DISTANCES. DUE TO ROUNDING, THE SUM OF INDIVIDUAL DIMENSIONS MAY NOT EQUAL THE OVERALL DIMENSION.
2. TOTAL AREA FOR THIS SUBDIVISION IS 13.881± ACRES, CONSISTING OF 74 RESIDENTIAL LOTS AND 3 LANDSCAPE LOTS.
3. ALL FRONT LOT CORNERS WILL BE SET WITH A 1" DIAMETER BRASS DISC STAMPED "LS 8268" IN THE SIDEWALK ON THE EXTENSION OF SIDE LOT LINES 1.00 FOOT FROM THE FRONT PROPERTY LINE UNLESS OTHERWISE NOTED.
4. ALL REAR LOT CORNERS AND ANGLE POINTS WILL BE SET WITH A 5/8" REBAR WITH PLASTIC CAP STAMPED "LS 8268", WHERE MONUMENTS FALL WITHIN A SOUND WALL OR CONCRETE FOOTING A 5/8" REBAR WITH PLASTIC CAP STAMPED "LS 8268" WILL BE SET ON THE SIDE LOT LINE ON A 4.00 FOOT OFFSET TO THE REAR LOT CORNER OR A 3/4" DIAMETER BRASS TAG STAMPED "LS 8268" WILL BE SET WITH EPOXY TO THE FACE OF WALL 2.00 FOOT ABOVE GROUND OR ON TOP OF WALL WHERE AN OFFSET MONUMENT CANNOT BE SET.
5. PURSUANT TO GOVERNMENT CODE SECTION 66434(G), THE FOLLOWING EASEMENTS, NOT SHOWN HEREON, IS HEREBY ABANDONED:
   a. 28'/30' PUE/PE ALONG THE NORTHERLY RIGHT-OF-WAY OF HOLT PARKWAY, WITHIN LOT 7 AS SHOWN ON THAT CERTAIN FINAL MAP ENTITLED "CREEKVIEW - PHASE 3 LARGE LOT SUBDIVISION", FILED FOR RECORD ON DECEMBER 2, 2021 IN BOOK FF OF MAPS, AT PAGE 84, PLACER COUNTY RECORDS.
6. A PRELIMINARY SOILS REPORT WAS PREPARED BY GEOCON CONSULTANTS, INC. DATED AUGUST, 2014; PROJECT NO. S9578-05-05 AND ON FILE WITH THE CITY OF ROSEVILLE DEVELOPMENT SERVICES - ENGINEERING DEPARTMENT, FILE NO. 308-885.
7. TEMPORARY EASEMENT AGREEMENT AS DESCRIBED IN DOCUMENT NUMBER 2020-0035674, OFFICIAL RECORDS OF PLACER COUNTY, HAS COMPLETED ITS TERM AND IS NO LONGER AN ENCUMBRANCE ON THE PROPERTY.

LEGEND:

■	FOUND QUARTER SECTION CORNER AS NOTED
⊗	COPPERWELD SURVEY MONUMENT WITH CENTER PUNCH IN MONUMENT WELL STAMPED "LS 9265" TO BE SET PER (1)
●	5/8" REBAR WITH PLASTIC CAP STAMPED "LS 9265" TO BE SET PER (1)
⊗	SET COPPERWELD SURVEY MONUMENT WITH CENTER PUNCH IN MONUMENT WELL STAMPED "LS 8268"
○	DIMENSION POINT
CB	CHORD BEARING
CD	CHORD DISTANCE
IOD	IRREVOCABLE OFFER OF DEDICATION
(OA)	OVERALL
OR	OFFICIAL RECORDS OF PLACER COUNTY
PE	PEDESTRIAN EASEMENT
PUE	PUBLIC UTILITY EASEMENT
(R)	RADIAL BEARING
SF	SQUARE FEET
(X)	SHEET INDEX NUMBER
———	BOUNDARY
———	LOT LINE
- - - - -	ADJACENT PROPERTY
———	RIGHT-OF-WAY
— — —	EXISTING IOD/RIGHT-OF-WAY
— — —	EASEMENT
— - —	CENTER LINE
— · —	SECTION LINE

BASIS OF BEARINGS:

THE BASIS OF BEARINGS FOR THIS MAP IS NORTH 00°12'41" WEST ALONG THE EASTERLY BOUNDARY LINE OF LOT 7 AND THE QUARTER SECTION CORNER AS SHOWN ON THAT CERTAIN FINAL MAP ENTITLED "CREEKVIEW - PHASE 3 LARGE LOT SUBDIVISION" FILED FOR RECORD ON DECEMBER 2, 2021 IN BOOK FF OF MAPS, AT PAGE 84, PLACER COUNTY RECORDS.

REFERENCES:

(1) FF MAPS 84

N

0 40 80 160
SCALE: 1"=80'

FINAL MAP OF
CREEKVIEW PHASE 4 VILLAGE 7
SUBDIVISION NO. PL20-0201

LOT 7 AS SHOWN ON THAT CERTAIN FINAL MAP TITLED "CREEKVIEW - PHASE 3 LARGE LOT SUBDIVISION, SUBDIVISION NO. PL20-0201", FILED FOR RECORD ON DECEMBER 2, 2021, IN BOOK FF OF MAPS AT PAGE 84, PLACER COUNTY RECORDS, WITHIN SECTION 14, TOWNSHIP 11 NORTH, RANGE 5 EAST, MOUNT DIABLO MERIDIAN

CITY OF ROSEVILLE • PLACER COUNTY • CALIFORNIA

MACKAY & SOMPS
ENGINEERS PLANNERS SURVEYORS
1025 Creekside Ridge Drive, Suite 150, Roseville, CA 95678 (916) 773-1189

AUGUST 2024

18431.CV.PH4.V7

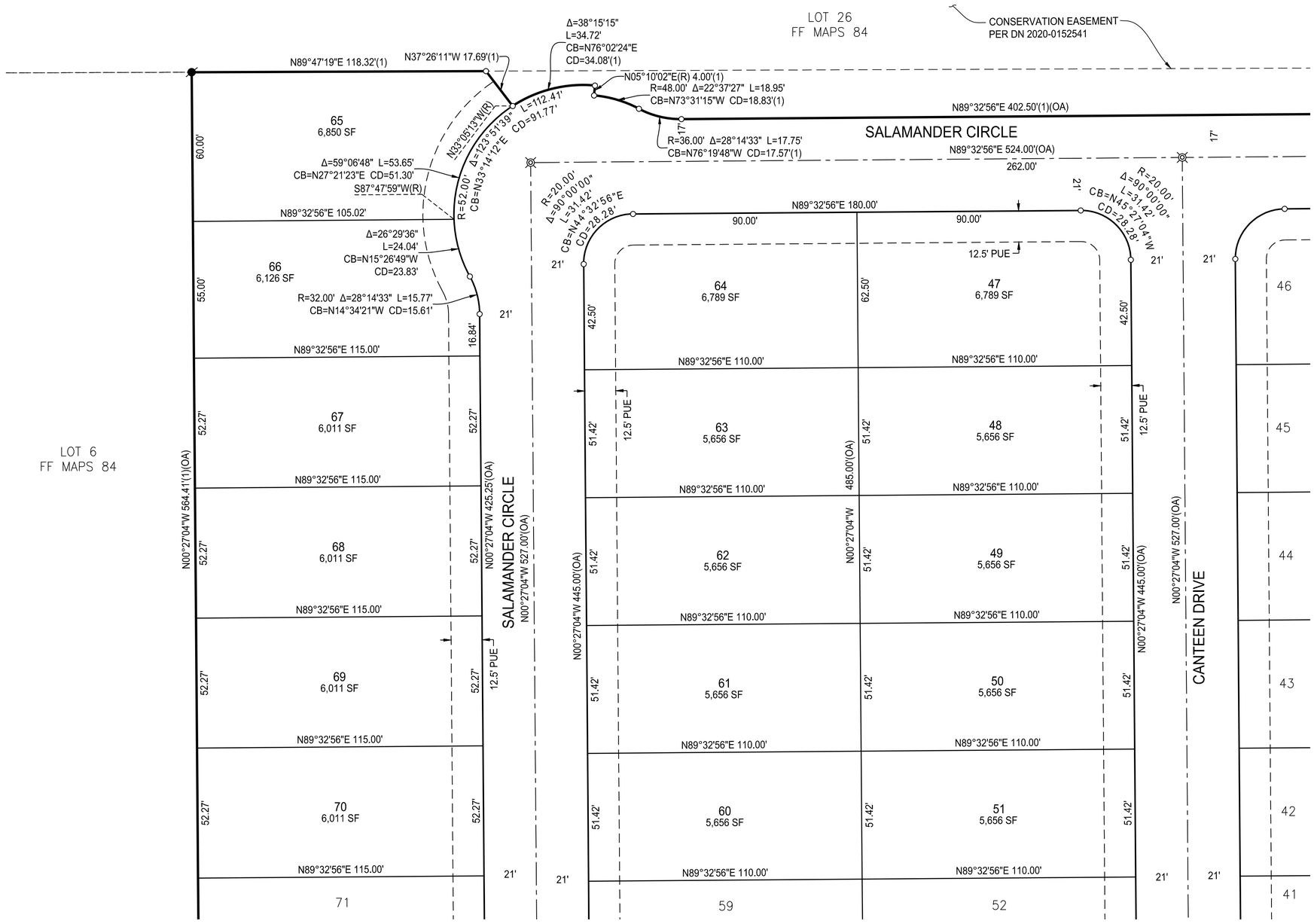

FINAL MAP OF

CREEKVIEW PHASE 4
VILLAGE 7

SUBDIVISION NO. PL20-0201

LOT 7 AS SHOWN ON THAT CERTAIN FINAL MAP TITLED "CREEKVIEW - PHASE 3 LARGE LOT SUBDIVISION, SUBDIVISION NO. PL20-0201", FILED FOR RECORD ON DECEMBER 2, 2021, IN BOOK FF OF MAPS AT PAGE 84, PLACER COUNTY RECORDS, WITHIN SECTION 14, TOWNSHIP 11 NORTH, RANGE 5 EAST, MOUNT DIABLO MERIDIAN

CITY OF ROSEVILLE • PLACER COUNTY • CALIFORNIA

MACKAY & SOMPS
ENGINEERS PLANNERS SURVEYORS
1025 Creekside Ridge Drive, Suite 150, Roseville, CA 95678 (916) 773-1189

AUGUST 2024

SHEET 3 OF 7 18431.CV.PH4.V7

SEE SHEET 2 FOR NOTES, REFERENCES, BASIS OF BEARINGS AND LEGEND

BOOK ___ OF MAPS, PAGE ____

LOT 26
FF MAPS 84

CONSERVATION EASEMENT
PER DN 2020-0152541

Δ=37°03'51" L=33.64'
CB=N74°07'56"W CD=33.05'(1)

N02°39'52"W(R) 4.00'(1)

R=48.00' Δ=26°01'46" L=21.81'
CB=N74°19'15"E CD=21.62'(1)

N89°32'56"E 402.50'(1)(OA)

R=36.00' Δ=28°14'33" L=17.75'
CB=N75°25'39"E CD=17.57'(1)

SALAMANDER CIRCLE

N89°32'56"E 524.00'(OA)

262.00'

17'

R=20.00'
Δ=90°00'00"
L=31.42'
CB=N44°32'56"E
CD=28.28'

21'

N89°32'56"E 180.00'

90.00'

90.00'

12.5' PUE

R=20.00'
Δ=90°00'00"
L=31.42'
CB=N45°27'04"W
CD=28.28'

R=52.00'
CB=N32°26'12"W
L=109.32'
CD=90.27'

N83°49'40"E 140.63'(1)

N34°23'59"E(R) 22.28'(1)

Δ=40°40'17" L=36.91'
CB=N35°15'52"W CD=36.14'

N75°04'17"E(R)

N89°32'56"E 131.76'

Δ=42°43'12" L=38.77'
CB=N06°25'53"E CD=37.88'

Δ=23°18'50" L=13.02'
CB=N16°08'03"E CD=12.93'

N85°31'22"W(R)

N89°32'56"E 139.78'

Δ=4°55'43" L=2.75'
CB=N02°00'47"E CD=2.75'

C1

N89°32'56"E 139.69'

N89°32'56"E 139.48'

N89°32'56"E 139.28'

N89°32'56"E 139.07'

N89°32'56"E 138.86'

N89°32'56"E 110.00'

N00°27'04"W 445.00'(OA)

N00°27'04"W 527.00'(OA)

N00°27'04"W 597.25'(OA)

N00°27'04"W 658.00'(OA)

N00°12'41"W 739.98'(1)(OA)

485.00'(OA)

527.00'

42.50'

62.50'

51.42'

47.25'

61.97'

50.00'

12.5' PUE

Curve Table					
Curve #	Radius	Delta	Length	Chord Bearing	Chord Length
C1	32.00'	28°14'33"	15.77'	N13°40'12"E	15.61'

46
6,789 SF

29
6,789 SF

45
5,656 SF

30
5,656 SF

44
5,656 SF

31
5,656 SF

43
5,656 SF

32
5,656 SF

42
5,656 SF

33
5,656 SF

41

34

28
7,792 SF

27
6,662 SF

26
6,990 SF

25
6,979 SF

24
6,969 SF

23
6,959 SF

22
6,948 SF

21

47

48

49

50

51

52

110

109

108

107

106

105

104

103

CANTEEN DRIVE

SALAMANDER CIRCLE

FIDDYMENT RANCH
PHASE 3 VILLAGE F-10
FF MAPS 79

SEE SHEET 3

SEE SHEET 6

N

0 30 60

SCALE: 1"=30'

FINAL MAP OF

CREEKVIEW PHASE 4
VILLAGE 7

SUBDIVISION NO. PL20-0201

LOT 7 AS SHOWN ON THAT CERTAIN FINAL MAP TITLED "CREEKVIEW - PHASE 3 LARGE LOT SUBDIVISION, SUBDIVISION NO. PL20-0201", FILED FOR RECORD ON DECEMBER 2, 2021, IN BOOK FF OF MAPS AT PAGE 84, PLACER COUNTY RECORDS, WITHIN SECTION 14, TOWNSHIP 11 NORTH, RANGE 5 EAST, MOUNT DIABLO MERIDIAN

CITY OF ROSEVILLE • PLACER COUNTY • CALIFORNIA

MACKAY & SOMPS
ENGINEERS PLANNERS SURVEYORS
1025 Creekside Ridge Drive, Suite 150, Roseville, CA 95678 (916) 773-1189

AUGUST 2024

18431.CV.PH4.V7

SEE SHEET 2 FOR NOTES, REFERENCES, BASIS OF BEARINGS AND LEGEND

BOOK ___ OF MAPS, PAGE ____

FINAL MAP OF

CREEKVIEW PHASE 4
VILLAGE 7

SUBDIVISION NO. PL20-0201

LOT 7 AS SHOWN ON THAT CERTAIN FINAL MAP TITLED "CREEKVIEW - PHASE 3 LARGE LOT SUBDIVISION, SUBDIVISION NO. PL20-0201", FILED FOR RECORD ON DECEMBER 2, 2021, IN BOOK FF OF MAPS AT PAGE 84, PLACER COUNTY RECORDS, WITHIN SECTION 14, TOWNSHIP 11 NORTH, RANGE 5 EAST, MOUNT DIABLO MERIDIAN

CITY OF ROSEVILLE • PLACER COUNTY • CALIFORNIA

MACKAY & SOMPS
ENGINEERS PLANNERS SURVEYORS
1025 Creekside Ridge Drive, Suite 150, Roseville, CA 95678 (916) 773-1189

AUGUST 2024

SHEET 5 OF 7 18431.CV.PH4.V7

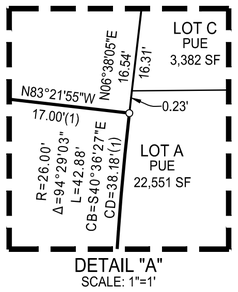

DETAIL "A"
SCALE: 1"=1'

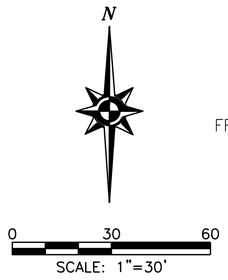

LOT 6
FF MAPS 84

Line Table		
Line #	Bearing	Length
L1	N6°38'05"E	16.54'

SEE SHEET 3

SEE SHEET 6

SEE SHEET 2 FOR NOTES, REFERENCES, BASIS OF BEARINGS AND LEGEND

SEE SHEET 4

SEE SHEET 5

CANTEEN DRIVE

SALAMANDER CIRCLE

WHISTLING PINE WAY

HOLT PARKWAY

FIDDYMENT RANCH
PHASE 3 VILLAGE F-10
FF MAPS 79

LOT A
PUE
22,551 SF

LOT B
PUE
3,812 SF

LOT 8 – FF MAPS 84

PARCEL A
17 PM 102

FOUND 2-1/2" BRASS DISC IN
1-1/2" IRON PIPE STAMPED
AS SHOWN PER (1)

T11N R5E
1/4
S14•S13
LS 9265

N

0 30 60
SCALE: 1"=30'

FINAL MAP OF

CREEKVIEW PHASE 4 VILLAGE 7

SUBDIVISION NO. PL20-0201

LOT 7 AS SHOWN ON THAT CERTAIN FINAL MAP TITLED "CREEKVIEW - PHASE 3 LARGE LOT SUBDIVISION, SUBDIVISION NO. PL20-0201", FILED FOR RECORD ON DECEMBER 2, 2021, IN BOOK FF OF MAPS AT PAGE 84, PLACER COUNTY RECORDS, WITHIN SECTION 14, TOWNSHIP 11 NORTH, RANGE 5 EAST, MOUNT DIABLO MERIDIAN

CITY OF ROSEVILLE • PLACER COUNTY • CALIFORNIA

MACKAY & SOMPS
ENGINEERS PLANNERS SURVEYORS
1025 Creekside Ridge Drive, Suite 150, Roseville, CA 95678 (916) 773-1189

AUGUST 2024

18431.CV.PH4.V7

SEE SHEET 2 FOR NOTES, REFERENCES, BASIS OF BEARINGS AND LEGEND

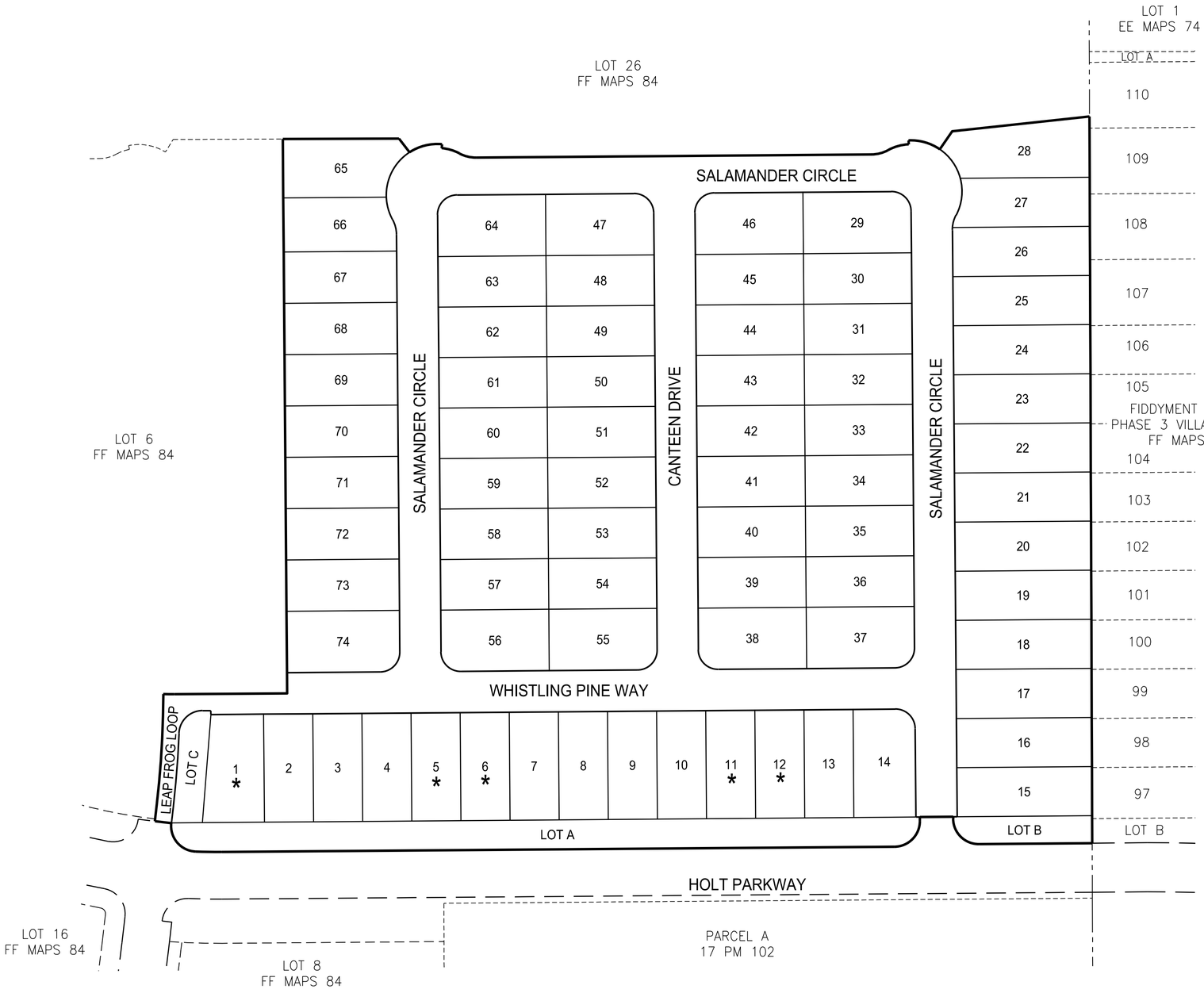

ADDITIONAL INFORMATION FOR INFORMATIONAL PURPOSES ONLY PURSUANT TO SECTION 66434.2 OF THE GOVERNMENT CODE

EACH RESIDENTIAL DWELLING CONSTRUCTED ON ANY OF THE LOTS INDICATED SHALL BE FITTED WITH A SEWER BACKFLOW PREVENTER VALVE AS APPROVED BY THE CITY OF ROSEVILLLE. IT SHALL BE THE RESPONSIBILITY OF THE OWNER OF SAID DWELLING TO MAINTAIN THE VALVE AND PREVENT DAMAGE FROM OCCURRING THERETO. THE CITY OF ROSEVILLE SHALL NOT BE RESPONSIBLE FOR THE MAINTENANCE OR PERFORMANCE OF THE VALVE, AND THE CITY OF ROSEVILLE SHALL NOT BE LIABLE FOR ANY DAMAGE OCCURRING TO ANY SUCH DWELLING OR ITS CONTENTS DUE TO FAILURE OF THE VALVE FOR ANY REASON WHATSOEVER.

LEGEND

* DENOTES SEWER BACKFLOW PREVENTER VALVE REQUIRED ON SANITARY SEWER CONNECTION BY THE CITY OF ROSEVILLE WITH THE BUILDING PERMIT AND MAINTAINED THEREAFTER BY THE OWNER.

N

0 40 80 160
SCALE: 1"=80'

FINAL MAP OF

CREEKVIEW PHASE 4
VILLAGE 7

SUBDIVISION NO. PL20-0201

LOT 7 AS SHOWN ON THAT CERTAIN FINAL MAP TITLED "CREEKVIEW - PHASE 3 LARGE LOT SUBDIVISION, SUBDIVISION NO. PL20-0201", FILED FOR RECORD ON DECEMBER 2, 2021, IN BOOK FF OF MAPS AT PAGE 84, PLACER COUNTY RECORDS, WITHIN SECTION 14, TOWNSHIP 11 NORTH, RANGE 5 EAST, MOUNT DIABLO MERIDIAN

CITY OF ROSEVILLE • PLACER COUNTY • CALIFORNIA

MACKAY & SOMPS
ENGINEERS PLANNERS SURVEYORS
1025 Creekside Ridge Drive, Suite 150, Roseville, CA 95678 (916) 773-1189

AUGUST 2024

18431.CV.PH4.V7

RESOLUTION NO. 24-287

APPROVING A SUBDIVISION AGREEMENT, BY AND BETWEEN THE CITY OF ROSEVILLE AND ANTHEM UNITED CREEKVIEW DEVELOPMENTS LIMITED PARTNERSHIP, AND AUTHORIZING THE CITY MANAGER TO EXECUTE IT ON BEHALF OF THE CITY OF ROSEVILLE

WHEREAS, a subdivision agreement, by and between the City of Roseville and Anthem United Creekview Developments Limited Partnership, for the Creekview Phase 4 - Village 7 Subdivision, has been reviewed by the City Council; and

NOW, THEREFORE, BE IT RESOLVED by the Council of the City of Roseville that said agreement is approved and the City Manager is authorized to execute it on behalf of the City of Roseville.

PASSED AND ADOPTED by the Council of the City of Roseville this____day of _____, 2024, by the following vote on roll call:

AYES COUNCILMEMBERS:

NOES COUNCILMEMBERS:

ABSENT COUNCILMEMBERS:

_____
MAYOR

ATTEST:

_____
City Clerk

RECORDING REQUESTED BY AND WHEN RECORDED, PLEASE RETURN TO:

City Clerk
CITY OF ROSEVILLE
311 Vernon Street
Roseville, CA 95678

Exempt from recording fees
Pursuant to Govt. Code §27383

SUBDIVISION AGREEMENT

Creekview Phase 4-Village 7 SUBDIVISION

THIS AGREEMENT, made and entered into this ___ day of _____, 20__, by and between the CITY OF ROSEVILLE, a municipal corporation ("CITY"), and Anthem United Creekview Developments Limited Partnership, a Washington Limited Partnership, ("SUBDIVIDER"),

W I T N E S S E T H:

WHEREAS, SUBDIVIDER is possessed of a tract of land lying in the City of Roseville, County of Placer, known as " Creekview Phase 4 Village 7 Subdivision" (Subdivision no. PL20-0201 ; "the Subdivision"); and

WHEREAS, a tentative map of the Subdivision was approved by the City Planning Commission on the 22nd day of July, 20 21, and the final map of the Subdivision has been approved subject to the execution of this Agreement; and

WHEREAS, the final map has been filed on the ____ day of _____, 20__ in Book _____ of Parcel/Subdivision Maps at Page _____ in the Official Records, Placer County Recorder, file no. _____; and

WHEREAS, Section 18.20.110 of the Roseville Municipal Code, regulating the subdivision of land in the City, requires that SUBDIVIDER shall execute and file an agreement between itself and CITY relating to the improvements to be made in a subdivision, prior to the approval by the City Council of the final map.

NOW, THEREFORE, the parties agree as follows:

1. Rights-of-Way. Except as otherwise provided by this Agreement, CITY rejects all lands, right-of-ways, and easements offered for dedication on the final map of the Subdivision. All such offers shall, however, remain open, and shall constitute irrevocable offers of dedication in accordance with Government Code Section 66477.2. All such offers may be accepted by CITY in its sole discretion at any later date without further notice to SUBDIVIDER as provided by law.

By way of explanation only, it is the current intention of CITY to accept all or part of such irrevocable offers to dedicate upon acceptance of the improvements called for in this Agreement.

2. Improvements - Time Limit. SUBDIVIDER agrees to cause all improvements to be made and constructed in the Subdivision to fully comply with the requirements of the Roseville Municipal Code and the Subdivision Map Act of the State of California according to the improvement plans for the Subdivision prepared by MacKay & Somps, dated December 7, 2023 and approved by the City Engineer and including any changes or

alterations to such improvements required by the City Engineer, and to install, on or before December 31, 2025, such survey monuments as may be required by the City Engineer ("the Work"). SUBDIVIDER agrees to pay for any materials, provisions or other supplies used in, upon, for or about the performance of the Work, or for any work or labor of any kind done in connection with the Work, or for any amounts due under the Unemployment Insurance Act with respect to such work or labor.

SUBDIVIDER agrees to complete all of the Work on or before twenty-four (24) months from the date of this Agreement. If in the opinion of the City Engineer of CITY, an extension of this Agreement is not detrimental to the public welfare, he or she is, in his or her sole discretion, hereby authorized to extend the time within which the Work shall be completed for a period not to exceed twelve (12) months. Upon a written application made by SUBDIVIDER, further extensions, not to exceed an additional six (6) months, shall be reviewed and approved at the discretion of the City Engineer of CITY. Any such application extension request by SUBDIVIDER shall fully state the grounds and facts relied upon for the granting of additional extensions.

In the event that SUBDIVIDER shall fail to complete the Work within the time provided by this Agreement, CITY may, in its sole discretion and in addition to any other remedy provided in this Agreement or by law, enter upon the Subdivision and complete the Work and recover the full cost and expense of such construction from SUBDIVIDER, SUBDIVIDER's successors and assigns, or from the then owner of the Subdivision, and/or place a lien upon the Subdivision for such cost and expense.

If at anytime prior to the expiration of the time provided by this Agreement the City Engineer of CITY determines that a safety hazard exists within an existing public right-of-

way, the City Engineer shall give written notice to SUBDIVIDER to eliminate the safety hazard. If SUBDIVIDER fails to eliminate the safety hazard within five (5) calendar days of the written notice, CITY may, in its sole discretion and in addition to any other remedy provided in this Agreement or by law, eliminate the safety hazard and recover the full cost and expense of such work from SUBDIVIDER, SUBDIVIDER's successors and assigns, or from the then owner of the Subdivision, and/or place a lien upon the Subdivision for such cost and expense.

3. Acquisition and Dedication of Easements or Rights-of-Ways. If any of the Work is to be constructed or installed on land not within the Subdivision or already existing public right-of-way, no construction or installation shall be commenced before:

a. The irrevocable offer of dedication or conveyance to CITY of appropriate right-of-ways, easements or other interest in real property, and appropriate authorization from the property owner to allow construction or installation of the improvements or work; or

b. The issuance of an order of possession by a court of competent jurisdiction pursuant to the State Eminent Domain Law. SUBDIVIDER shall comply in all respects with any such order of possession.

Nothing in this Section 3 shall be construed as authorizing or granting an extension of time to SUBDIVIDER for completion of the Work.

4. Inspection Fees and Costs. The City Engineer shall inspect all of the Work improvements made in the Subdivision to see that they comply with CITY's subdivision regulations and specifications. SUBDIVIDER shall deposit the estimated inspection fee and reimburse CITY for the cost of such inspections in accordance with Roseville Municipal Code section 18.20.070.

5. Securities.

a. SUBDIVIDER shall file with this Agreement two (2) improvement securities as set forth in Roseville Municipal Code Sections 18.20.150 and 18.20.160. Each security shall be in the amount of one hundred percent (100%) of the total estimated cost of the Work as determined by the City Engineer which amount is the sum of $ 1,407,845.00 . One improvement security shall secure faithful performance of this Agreement as required by Section 66499.3(a) of the Government Code of the State of California (the "faithful performance" security). The second improvement security shall, as required by Section 66499.3(b) of the Government Code of the State of California, secure the obligations set forth in Title 1 (commencing with Section 8000) of Part 6 of Division 4 of the Civil Code of the State of California for payment to the contractor, his subcontractors and to persons renting equipment or furnishing labor or materials to them for the Work (the "payment security"). The improvement securities required under this paragraph shall also secure placement of monumentation and guarantee payment therefor as provided by California Government Code section 66496.

b. SUBDIVIDER shall also file with this Agreement a "guarantee and warranty security" in the amount of ten percent (10%) of the City Engineer's estimated cost of the Work as set forth in Section 18.20.170 of the Roseville Municipal Code to guarantee and warrant the Work for a period of one year following its completion and acceptance against any defective work or labor done, or defective materials furnished, as required by Section 66499(a)(5) of the Government Code of the State of California. The guarantee and warranty security shall be released upon SUBDIVIDER's request following expiration of the warranty period and subject to the reasonable determination of the City Engineer that SUBDIVIDER's warranty obligations have been satisfied.

c. Any bonds submitted as security pursuant to this section shall be executed by a surety company authorized to transact a surety business in the State of California. All required securities shall be in a form approved by the City Attorney of CITY.

6. Successors and Assigns – Covenant Running with the Land. This Agreement shall inure to the benefit of, and be binding upon, the successors and assigns of the respective parties. It shall be recorded in the Office of the Recorder of Placer County concurrently with the final map of the Subdivision, and shall constitute a covenant running with the land and an equitable servitude upon the real property within the Subdivision.

7. Acceptance of Improvements Upon Completion. Upon satisfactory completion of the Work, in accordance with this Agreement, CITY agrees to accept the Work and its improvements and the offers of dedication described in paragraph 1, subject to the provisions of paragraphs 1 and 10 of this Agreement.

8. Notice Regarding Construction. SUBDIVIDER shall notify the City Engineer of CITY in writing three (3) days prior to the commencement of construction of the Work.

9. Subdivider's Obligation to Warn Public During Construction. Until final acceptance of the Work, SUBDIVIDER shall give good and adequate warning to the public of each and every dangerous condition which may exist in the Work, and will take all reasonable actions to protect the public from any such dangerous condition.

10. Warranty.

a. SUBDIVIDER guarantees and warrants the public improvements which constitute the Work required by this Agreement, and agrees to remedy any defects in the improvements or the Work arising from faulty or defective materials or construction of said improvements or the Work occurring within twelve (12) months after their acceptance by CITY.

SUBDIVIDER agrees to permit inspection of all improvements in the Subdivision by the City Engineer of CITY for such period, and to reimburse CITY for the cost of such inspections.

b. If, within the warranty period, the Work or improvement or any part of the Work done, furnished, installed, or constructed fails to fulfill any of the requirements of this Agreement or the improvement plans and specifications, SUBDIVIDER shall, without delay or cost to CITY, repair, replace or reconstruct any defective or otherwise unsatisfactory part or parts of the Work. CITY may, at its sole option, perform such repair or replacement itself if SUBDIVIDER has failed to commence such repair within twenty (20) days after CITY has mailed written notice of default to SUBDIVIDER and to SUBDIVIDER'S Surety. In such event, SUBDIVIDER agrees to pay the cost of such repair and replacement by CITY and CITY may, at its option, recover such cost as a lien against the Subdivision should the cost exceed the inspection fee deposited pursuant to paragraph 4 of this Agreement.

Should CITY determine that the public safety requires repairs or replacements to be made before SUBDIVIDER can be notified, CITY may, in its sole discretion, make the necessary repairs or replacement or perform the necessary work. SUBDIVIDER shall pay to CITY the cost of such repairs and CITY may at its option recover such cost as a lien against the Subdivision.

11. Indemnification. To the fullest extent allowed by law, SUBDIVIDER shall defend, indemnify, and save and hold harmless CITY, its officers, agents, employees and volunteers from any claims, suits or actions of every name, kind and description brought forth, or on account of, injuries to or death of any person (including but not limited to workers and the public), or damage to property, resulting from or arising out of SUBDIVIDER 's willful misconduct or negligent act or omission while engaged in the performance of obligations or

exercise of rights created by this Agreement, except those matters arising from CITY's sole or active negligence or willful misconduct. The parties intend that this provision shall be broadly construed.

SUBDIVIDER's responsibility for such defense and indemnity obligations shall survive the termination or completion of this Agreement for the full period of time allowed by law. The defense and indemnity obligations of this Agreement are undertaken in addition to, and shall not in any way be limited by, the insurance obligations contained in this Agreement.

12. Insurance. SUBDIVIDER agrees to continuously maintain, in full force and effect, at a minimum the following policies of insurance during the term of this Agreement.

COVERAGE	LIMITS OF LIABILITY
General Liability	$2,000,000 per occurrence $4,000,000 aggregate Personal Injury: $2,000,000 per occurrence $4,000,000 aggregate
Automobile Liability	$1,000,000 combined single limit
Workers' Compensation	Statutory

a. Form. SUBDIVIDER shall submit a certificate evidencing such coverage for the period covered by this Agreement in a form satisfactory to Risk Management and the City Attorney, prior to undertaking any work hereunder. Any insurance written on a claims made basis is subject to the approval of Risk Management and the City Attorney.

b. Additional Insureds. SUBDIVIDER shall also provide a separate endorsement form or section of the policy showing CITY, its officers, agents, employees and volunteers as additional insureds for each type of coverage, except for Workers' Compensation, for ongoing and completed operations. Such insurance shall specifically cover the contractual

liability of SUBDIVIDER. The additional insured coverage under the SUBDIVIDER's policy shall be primary and noncontributory, as evidenced by a separate endorsement or section of the policy, and shall not seek contribution from CITY's insurance or self-insurance. In addition, the additional insured coverage shall be at least as broad as the Insurance Services Office ("ISO") CG 20 01 Endorsement. Any available insurance proceeds in excess of the specified minimum insurance coverage requirements and limits shall be available to the additional insureds. Furthermore, the requirements for coverage and limits shall be: (1) the minimum coverage and limits specified in this Agreement; or (2) the full coverage and maximum limits of any insurance proceeds available to the named insureds, whichever is greater.

c. Cancellation/Modification. SUBDIVIDER shall provide ten (10) days written notice to CITY prior to cancellation or modification of any insurance required by this Agreement.

d. Umbrella/Excess Insurance. The limits of insurance required in this Agreement may be satisfied by a combination of primary and excess insurance. Any excess insurance shall contain or be endorsed to contain a provision that such coverage shall also apply on a primary and noncontributory basis for the benefit of CITY (if agreed to in a written contract) before CITY's own insurance shall be called upon to protect it as a named insured.

e. Self-Insured Retentions. All self-insured retentions ("SIR") must be disclosed to Risk Management for approval and shall not reduce the limits of liability. Policies containing any SIR provision shall provide or be endorsed to provide that the SIR may be satisfied by either the named insured or CITY. CITY reserves the right to obtain a full certified copy of any insurance policy and endorsements. The failure to exercise this right shall not constitute a waiver of such right.

f. Waiver of Subrogation. SUBDIVIDER hereby agrees to waive subrogation which any insurer of SUBDIVIDER may acquire from SUBDIVIDER by virtue of the payment of any loss under a Workers Compensation, Commercial General Liability or Automobile Liability policy. All Workers Compensation, Commercial General Liability and Automobile Liability policies shall be endorsed with a waiver of subrogation in favor of CITY, its officers, agents, employees and volunteers for all worked performed by SUBDIVIDER, its employees, agents and subcontractors.

g. Liability/Remedies. Insurance coverage in the minimum amounts set forth herein shall not be construed to relieve SUBDIVIDER of liability in excess of such coverage, nor shall it preclude CITY from taking such other actions as are available to it under any other provisions of this Agreement or law.

13. Irrevocability of Security. The improvement securities furnished pursuant to paragraph 5 shall be irrevocable, shall not be limited as to time (except as to the one-year guarantee and warranty period specified in paragraph 10) and shall provide that they may be released, in whole or part, only upon the written approval of the City Engineer of CITY.

14. Attorney's Fees; Venue; Governing Law. Any action by any party to this Agreement, or any action concerning a security furnished pursuant to paragraph 5, shall be brought in the appropriate court of competent jurisdiction within the County of Placer, State of California, notwithstanding any other provision of law which may provide that such action may be brought in some other location. In the event it becomes necessary for either party to bring an action with respect to enforcement of the provisions of this Agreement, or the security therefor, the prevailing party in such action shall be awarded a reasonable attorney's fee, as may be

determined by the Court. This Agreement shall be governed by and construed in accordance with the laws of the State of California.

15. Release of Faithful Performance Security. Release of faithful performance security shall be in compliance with and pursuant to the procedures set forth in Government Code Section 66499.7. Upon the completion of all secured Work by SUBDIVIDER and written acceptance of that completed Work by CITY, and the furnishing of the warranty security as required by paragraph 5(b), the City Engineer shall authorize the release of the remaining faithful performance security.

16. Release of Payment Security. Thirty-five (35) days after a notice of completion is recorded with respect to the Work, the City Engineer of CITY may authorize the release of the payment security, in the event that no claims have been filed against said security. In the event that claims or actions are filed against the security, the City Engineer may release so much of such security as is in excess of the total of the claims made against it, plus a reasonable amount of costs and attorney's fees.

17. Automatic Termination Upon Completion and Sale of Residential Unit. This Agreement and any lien pursuant hereto shall automatically be terminated, without any further action by either party or need to record any additional document, with respect to any single-family residential lot within a parcel designated by the Specific Plan for residential use, upon completion of construction and issuance by the City of a final inspection for a dwelling unit upon such residential lot and conveyance of such improved residential lot to a bona-fide good faith purchaser thereof. In connection with its issuance of a final inspection for such improved lot, City shall confirm that: (i) all improvements which are required to serve the lot, as determined by City, have been accepted by City; (ii) the lot is included within the Maintenance CFD as required

by the applicable Development Agreement or other financing mechanism acceptable to the City, to the extent required hereby; and (iii) if and to the extent applicable to such lot, an affordable purchase or rental housing agreement has been recorded on the lot. Termination of this Agreement for any such residential lot as provided for in this section shall not in any way be construed to terminate or modify any assessment district or Mello-Roos Community Facilities District lien affecting such lot at the time of termination.

18. Failure of Performance. In addition to any other remedies provided in this Agreement or by law, in the event SUBDIVIDER fails to perform one or more of the covenants or conditions of this Agreement, CITY shall have recourse to the security given to guarantee the performance of such acts. CITY may do, or cause to be done, those acts required of SUBDIVIDER, and shall have recourse against so much of the security as is necessary to discharge the responsibility of SUBDIVIDER. In the event CITY seeks recourse against a security, CITY shall also have recourse against SUBDIVIDER for any and all amounts necessary to complete the obligations of SUBDIVIDER in the event the security is insufficient to pay such amounts. All administrative costs, including reasonable attorney's fees pursuant to Section 66499.4 of the Government Code, incurred by CITY, in addition to the costs of the improvements, shall be a proper charge against the security and SUBDIVIDER.

19. Integration. This Agreement is an integrated agreement. It supersedes all prior negotiations, representations, or agreements, either written or oral.

20. Modification. This Agreement and each provision contained herein may be waived, amended, supplemented or eliminated only by mutual written agreement of the parties.

21. Notices. Any notices sent to the parties relating to this Agreement shall be sent by first class mail, postage prepaid or delivered to the following addresses:

Marc Stout, City Engineer
City of Roseville
311 Vernon Street
Roseville, CA 95678

Anthem Properties
Jason Gray, VP Land Development & Entitlements
3001 Douglas Boulevard, Ste. 200
Roseville CA 95661

Either party may amend its address by giving written notice to the other.

22. Severability. If any of the provisions contained in this Agreement are for any reason held invalid or unenforceable, such holding shall not affect the remaining provisions or the validity and enforceability of the Agreement as a whole.

IN WITNESS WHEREOF, the City of Roseville, a municipal corporation, has authorized the execution of this Agreement in duplicate by its City Manager and attestation by its City Clerk under authority of Resolution No. ____, adopted by the Council of the City of Roseville on the ___ day of _____, 20__, and SUBDIVIDER has caused this Agreement to be executed.

CITY OF ROSEVILLE, a
municipal corporation,

BY: _____
DOMINICK CASEY
City Manager

ATTEST:

BY: _____
CARMEN AVALOS
City Clerk

Anthem United Creekview Developments Limited Partnership
a Washington Limited Partnership

BY: _____
Print name: Brian Moore
Title: Vice President

and

BY: _____
Print name: Matt Gustus
Title: Vice President

(NOTARIZATION REQUIRED)

APPROVED AS TO FORM:

BY:_____
MICHELLE SHEIDENBERGER
City Attorney

APPROVED AS TO SUFFICIENCY:

BY: _____
MARC STOUT
City Engineer

CALIFORNIA CERTIFICATE OF ACKNOWLEDGMENT

A notary public or other officer completing this certificate verifies only the identity of the individual who signed the document to which this certificate is attached, and not the truthfulness, accuracy, or validity of that document.

State of California)

County of Placer)

On 4/2/24 before me, Terri Susan Sublett, Notary Public,
(here insert name and title of the officer)

personally appeared Brian Moore & Matt Gustus

who proved to me on the basis of satisfactory evidence to be the person(s) whose name(s) is/are subscribed to the within instrument and acknowledged to me that he/she/they executed the same in his/her/their authorized capacity(ies), and that by his/her/their signature(s) on the instrument the person(s), or the entity upon behalf of which the person(s) acted, executed the instrument.

I certify under PENALTY OF PERJURY under the laws of the State of California that the foregoing paragraph is true and correct.

TERRI SUSAN SUBLETT
COMM. #2431193
Notary Public - California
Placer County
My Comm. Expires Dec. 16, 2026

WITNESS my hand and official seal.

Signature Terri Susan Sublett (Seal)

Optional Information

Although the information in this section is not required by law, it could prevent fraudulent removal and reattachment of this acknowledgment to an unauthorized document and may prove useful to persons relying on the attached document.

Description of Attached Document

The preceding Certificate of Acknowledgment is attached to a document titled/for the purpose of Subdivision Improvement Agreement Creekview Phase 4 Village 7, containing 14 pages, and dated N/A.

The signer(s) capacity or authority is/are as:

- ☐ Individual(s)
- ☐ Attorney-in-Fact
- ☑ Corporate Officer(s) Vice Presidents
  Title(s)
- ☐ Guardian/Conservator
- ☐ Partner - Limited/General
- ☐ Trustee(s)
- ☐ Other: _____

representing: _____
Name(s) of Person(s) or Entity(ies) Signer is Representing

Additional Information

Method of Signer Identification

Proved to me on the basis of satisfactory evidence:
○ form(s) of identification ○ credible witness(es)

Notarial event is detailed in notary journal on:
Page # _____ Entry # _____

Notary contact: _____

Other

☐ Additional Signer(s) ☐ Signer(s) Thumbprint(s)

☐ _____

© Copyright 2007-2021 Notary Rotary, PO Box 41400, Des Moines, IA 50311-0507. All Rights Reserved.

Item Number 101772. Please contact your Authorized Reseller to purchase copies of this form.

COUNCIL COMMUNICATION

CC #: 3490
File #: 0900-04

Title:	Roseville Police Department Expansion Project - Professional Design Services Agreement
Contact:	Andre Baranov 916-774-5342 ajbaranov@roseville.ca.us

Meeting Date: 8/21/2024
Item #: 7.11.

RECOMMENDATION TO COUNCIL

Staff recommends that the City Council adopt a resolution to approve a professional design services agreement with 19Six Architects, Inc., for the design of the Police Department Expansion Project, and authorize the City Manager to execute the agreement in the amount of $1,351,350.

BACKGROUND

The Roseville Police Department building was originally designed to be 95,861 square feet. During the bidding process in 1996, the building was reduced by 12,161 square feet to 83,700 square feet and constructed in 1997 at this reduced size.

By 2007, the Police Department outgrew the building capacity, and a plan was developed to fill in the previously removed areas as part of the original construction value engineering. The project construction bid amount was over $10,000,000 and required a complete structural retrofit of the existing building. The project was considered unfeasible and suspended at that time.

In 2012, a new space study was performed showing that in addition to the work above, an additional 19,690 square feet of building area is needed to serve the expected growth of the Police Department through 2032. This larger project is not being pursued as part of this current scope due to funding limitations.

After considering various planning approaches, in March of 2022, the Public Works Department issued a Request for Proposals soliciting architectural services to assist with Master Planning of the Police Department Expansion Project to address the growing needs.

The Master Planning work that followed used the 2012 study as a basis for phasing of the Police Department Expansion Project and is summarized as follows:

- Phase 1A – Prepare a facilities master plan *(Completed in 2023)*

- Phase 1B – Construct a new parking lot or parking structure *(Now presented as phase 1B.1, 1B.2 at the Existing PD project location, and 1B.3 at the 2000 Hilltop Circle project location in this project)*
- Phase 2 – Construct a new office building and expanded public parking *(Not a part of this project)*
- Phase 3 – Tenant improvements to the existing building *(Part of this project scope)*
- Phase 4 – Construct of a new training facility *(Not a part of this project).*

At the present time, the project is transitioning to the Construction Documentation stage of the design process with a new architectural firm 19Six Architects Inc. Following a City standard Request for Proposal process, Public Works and Police Department staff have negotiated a scope of work and a corresponding fee with the selected consultant, 19Six Architects, to provide Construction Documentation based on the Phase 1A Master Plan. The project design scope includes:

- A Secured Parking Area;
- Improvements to Corporation Yard Road;
- Relocation of the Streets Maintenance Building from the PD Secured Parking area to 2000 Hilltop Circle; and
- Tenant Improvements to the existing Police Department building.

The not-to-exceed award amount for this work is $1,351,350.

FISCAL IMPACT

The $1,351,350 contract with 19Six Architects will be funded through the existing Police Department Facility Expansion, Design and Construction Project budget. The current project budget totaling $10,100,000 is appropriated in the Public Facilities Fund. There will be increased facility maintenance costs in the General Fund associated with the project due to the increased parking and building area. The project intends to incorporate energy savings from shade canopies and may realize solar electrical production from photovoltaic panels.

ENVIRONMENTAL REVIEW

The proposed project involves the minor alteration of an existing facility and construction of a limited number of small facilities. It also involves the construction of an Infill Development project. The project meets the requirements described in CEQA including conforming to the general plan and with the existing zoning, not more than five acres in size, has no habitat value for endangered, threatened, or rare species, would not result in any significant effects relating to traffic, noise, air quality, or water quality, and the site can be adequately served by all required utilities and public services. Therefore, this project is categorially exempt as a Class 1, Class 3, and Class 32 Exemption (State CEQA Guidelines Sections 15301, 15303, and 15332). The Exemption has been prepared and no further CEQA action is required.

CITY COUNCIL STRATEGIC PLAN/OVERARCHING GOALS

Goal A - Remain fiscally responsible in a changing world
Goal C - Maintain a safe and healthy community
Goal E - Deliver exceptional city services
Goal F - Invest in well-planned infrastructure and growth

Respectfully Submitted,

Andre Baranov, Project Supervisor

Jason Shykowski, Public Works Director

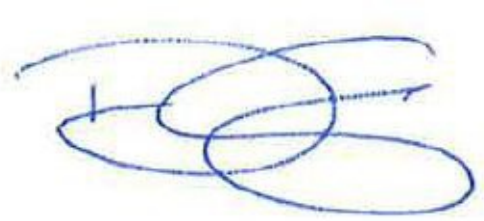

_____
Dominick Casey, City Manager

ATTACHMENTS:

Description

Resolution 24-290

Agreement

CEQA Exemption

RESOLUTION NO. 24-290

APPROVING A PROFESSIONAL DESIGN SERVICES AGREEMENT, BY AND BETWEEN THE CITY OF ROSEVILLE AND 19SIX ARCHITECTS, AND AUTHORIZING THE CITY MANAGER TO EXECUTE IT ON BEHALF OF THE CITY OF ROSEVILLE

WHEREAS, a professional design services agreement for architectural design services for the Roseville Police Department Expansion Project, Phase 1B Parking Lot, Phase 3 Tenant Improvements, by and between the City of Roseville and 19Six Architects, has been reviewed by the City Council; and

NOW, THEREFORE, BE IT RESOLVED by the Council of the City of Roseville that said agreement is hereby approved and that the City Manager is authorized to execute it on behalf of the City of Roseville.

PASSED AND ADOPTED by the Council of the City of Roseville this____day of _____, 2024, by the following vote on roll call:

AYES COUNCILMEMBERS:

NOES COUNCILMEMBERS:

ABSENT COUNCILMEMBERS:

_____
MAYOR

ATTEST:

_____
City Clerk

PROFESSIONAL DESIGN SERVICES AGREEMENT

Roseville Police Department Expansion Project

Phase 1B Parking Lot, Phase 3 Tenant Improvement

THIS AGREEMENT is made and entered into this ___ day of _____, 20__, by and between the City of Roseville, a municipal corporation ("CITY"), and 19Six Architects, a California corporation ("CONSULTANT"); and

W I T N E S S E T H:

WHEREAS, CITY desires professional design services consisting of architectural design services for Phase 1B Parking Lot and Phase 3 Tenant Improvement of the Roseville Police Department Expansion Project; and

WHEREAS, CONSULTANT has prepared a proposal dated April 22, 2024, which describes the scope of work to be performed by CONSULTANT, the budget for the work, and the schedule for performance of the work; and

WHEREAS, CONSULTANT is qualified and experienced to provide such professional design services.

NOW, THEREFORE, the parties agree as follows:

1. Services. CONSULTANT shall perform, at the direction of CITY, the scope of services as described in EXHIBIT "A," attached hereto and incorporated herein by this reference.

2. Compensation. For its services provided hereunder, CONSULTANT shall be compensated on a time and expense basis in accordance with the budget estimate as described in EXHIBIT "B," attached hereto and incorporated herein by this reference. Total compensation shall not exceed one million, three hundred fifty-one thousand, three hundred fifty dollars ($1,351,350).

CONSULTANT shall submit monthly invoices for its services. Such invoices shall be delineated by task, the person performing the services, and the hourly rate, which shall be stated in time increments of not greater than one-tenth (1/10) hours. CITY shall pay invoices within thirty (30) days after receipt, if the services specified in the invoice have been satisfactorily completed.

3. Indemnification. To the fullest extent allowed by law, CONSULTANT agrees to indemnify, including the cost to defend CITY, and its officers, agents, employees and volunteers from any and all claims, demands, costs or liability that arise out of, or pertain to, or relate to the negligence, recklessness, or willful misconduct of CONSULTANT and its agents in the performance of services under this contract, but this indemnity does not apply to liability for damages for death or bodily injury to persons, injury to property, or other loss, arising from the sole negligence, willful misconduct or defects in design by CITY or the agents, servants, or independent contractors who are directly responsible to CITY, or arising from the active negligence of CITY. Notwithstanding any terms of this section, indemnification and defense obligations shall conform to California Civil Code Section 2782.8.

CONSULTANT agrees to defend and indemnify CITY if, despite the parties intent and practice, any venue, agency, or court with competent jurisdiction determines that

CONSULTANT and/or any of its agents, officers, employees, volunteers, independent contractors, or subcontractors, are characterized as employee(s) of CITY.

CONSULTANT's responsibility for such defense and indemnity obligations shall survive the termination or completion of this Agreement for the full period of time allowed by law. The defense and indemnity obligations of this Agreement are undertaken in addition to, and shall not in any way be limited by, the insurance obligations contained in this Agreement.

4. Insurance. CONSULTANT agrees to continuously maintain, in full force and effect, the following minimum policies of insurance during the term of this Agreement.

COVERAGE	LIMITS OF LIABILITY
Workers' Compensation	Statutory
Commercial General Liability	$2,000,000 each occurrence $4,000,000 aggregate Personal Injury: $2,000,000 each occurrence $4,000,000 aggregate
Automobile Liability	$1,000,000 combined single limit
Professional Liability (errors and omissions)	$2,000,000 per claim $4,000,000 aggregate

a. Form. CONSULTANT shall submit a certificate evidencing such coverage for the period covered by this Agreement in a form satisfactory to Risk Management and the City Attorney, prior to undertaking any work hereunder. Any insurance written on a claims made basis is subject to the approval of Risk Management and the City Attorney.

b. Additional Insureds. CONSULTANT shall also provide a separate endorsement form or section of the policy showing CITY, its officers, agents, employees and volunteers as additional insureds for each type of coverage, except for Workers' Compensation

and Professional Liability. Such insurance shall specifically cover the contractual liability of CONSULTANT. The additional insured coverage under the CONSULTANT's policy shall be primary and noncontributory, as evidenced by a separate endorsement or section of the policy, and shall not seek contribution from CITY's insurance or self-insurance. In addition, the additional insured coverage shall be at least as broad as the Insurance Services Office ("ISO") CG 20 01 Endorsement. Any available insurance proceeds in excess of the specified minimum insurance coverage requirements and limits shall be available to the additional insureds. Furthermore, the requirements for coverage and limits shall be: (1) the minimum coverage and limits specified in this Agreement; or (2) the full coverage and maximum limits of any insurance proceeds available to the named insureds, whichever is greater.

c. Cancellation/Modification. CONSULTANT shall provide ten (10) days written notice to CITY prior to cancellation or modification of any insurance required by this Agreement.

d. Umbrella/Excess Insurance. The limits of insurance required in this Agreement may be satisfied by a combination of primary and excess insurance. Any excess insurance shall contain or be endorsed to contain a provision that such coverage shall also apply on a primary and noncontributory basis for the benefit of CITY (if agreed to in a written contract) before CITY's own insurance shall be called upon to protect it as a named insured.

e. Subcontractors. CONSULTANT agrees to include in its contracts with all subcontractors the same requirements and provisions of this Agreement, including the indemnity and insurance requirements, to the extent they apply to the scope of the subcontractor's work. Furthermore, CONSULTANT shall require its subcontractors to agree to be bound to CONSULTANT and CITY in the same manner and to the same extent as CONSULTANT is

bound to CITY under this Agreement. Additionally, CONSULTANT shall obligate its subcontractors to comply with these same provisions with respect to any tertiary subcontractor, regardless of tier. A copy of CITY's indemnity and insurance provisions will be furnished to the subcontractor or tertiary subcontractor upon request.

f. Self-Insured Retentions. All self-insured retentions ("SIR") must be disclosed to Risk Management for approval and shall not reduce the limits of liability. Policies containing any SIR provision shall provide or be endorsed to provide that the SIR may be satisfied by either the named insured or CITY. CITY reserves the right to obtain a full certified copy of any insurance policy and endorsements. The failure to exercise this right shall not constitute a waiver of such right.

g. Waiver of Subrogation. CONSULTANT hereby agrees to waive subrogation which any insurer of CONSULTANT may acquire from CONSULTANT by virtue of the payment of any loss under a Workers Compensation, Commercial General Liability or Automobile Liability policy. All Workers Compensation, Commercial General Liability and Automobile Liability policies shall be endorsed with a waiver of subrogation in favor of CITY, its officers, agents, employees and volunteers for all worked performed by CONSULTANT, its employees, agents and subcontractors.

h. Liability/Remedies. Insurance coverage in the minimum amounts set forth herein shall not be construed to relieve CONSULTANT of liability in excess of such coverage, nor shall it preclude CITY from taking such other actions as are available to it under any other provisions of this Agreement or law.

5. Records. CONSULTANT and its subcontractors shall maintain all files and records relating to the services performed hereunder during the term of this Agreement and for a

period of not less than one (1) year after the date of termination or expiration. Provided, however, that in the event of litigation or settlement of claims arising from the performance of this Agreement, CONSULTANT and its subcontractors shall maintain all files and records until such litigation, appeals or claims are resolved. Duly authorized representatives of CITY shall have right of access during normal business hours and after reasonable notice to CONSULTANT's and subcontractors' files and records relating to the services performed hereunder and may review and copy the files and records at appropriate stages during performance of the services and during the one (1) year period following termination or expiration of this Agreement. CONSULTANT shall include this provision in its contracts with all subcontractors.

6. Time is of the Essence. Time is of the essence of this Agreement.

7. Prevailing Wages. When applicable, for purposes of this Agreement, CONSULTANT and its subcontractors shall comply with all applicable prevailing wage laws, e.g., but not limited to, California Labor Code Sections 1770 et seq. In accordance with said Section 1775, CONSULTANT shall forfeit as a penalty to the City two hundred dollars ($200) for each calendar day or portion thereof for each worker paid less than the prevailing rates for such work or craft in which such worker is employed for any work done on-site under the Agreement by CONSULTANT or by any subcontractor in violation of the provisions of the Labor Code and in particular, Labor Code Sections 1770 to 1780, inclusive. In addition to said penalty and pursuant to said Section 1775, the difference between such stipulated prevailing wage rates and the amount paid to each worker for each calendar day or portion thereof for which each worker was paid less than the stipulated prevailing wage shall be paid to each worker by CONSULTANT or the applicable subcontractor.

Pursuant to the provisions of California Labor Code Section 1773, the contracting department has identified the source, stated below, of the general prevailing rate of wages applicable to the site to be done, for straight time, overtime, and holiday work. The holiday wage rate listed shall be applicable to all holidays recognized in the collective bargaining agreement of the particular craft, classification or type of worker concerned. These wage rates may be obtained from the State Department of Industrial Relations and/or the following website address: http://www.dir.ca.gov/dlsr/DPreWageDetermination.htm.

Pursuant to Labor Code Section 1773.2, general prevailing wage rates set forth above, which forms a part of this Agreement, shall be posted by CONSULTANT at a prominent place at the work site. Prevailing wage rates to be posted at the work site will be furnished by the contracting department. The possibility of wage increases is one of the elements to be considered by CONSULTANT in determining its proposal and will not under any circumstances be considered as the basis of a claim against CITY or the Agreement.

8. Contractor Registration. No contractor or subcontractor may work on a public works project unless registered with the Department of Industrial Relations pursuant to Labor Code section 1725.5. During the performance of this Agreement, CONSULTANT and its subcontractors shall have a continuing legal obligation to maintain current registration with the Department of Industrial Relations. CONSULTANT is hereby notified that this Agreement is subject to compliance monitoring and enforcement by the Department of Industrial Relations.

9. Compliance with Laws. CONSULTANT shall comply with all federal, state and local laws, ordinances and policies as may be applicable to the performance of services under this Agreement.

10. Public Contracts: Conflicts of Interest. CONSULTANT's duties and services under this Agreement shall not include preparing or assisting CITY with any portion of the CITY's preparation of a request for proposals, request for qualifications, or any other solicitation regarding a subsequent or additional contract with CITY. CITY shall at all times retain responsibility for public contracting, including with respect to any subsequent phase of this project. CONSULTANT's participation in the planning, discussions, or drawing of project plans or specifications shall be limited to conceptual, preliminary, or initial plans or specifications. CONSULTANT shall cooperate with CITY to ensure that all bidders for a subsequent contract on any subsequent phase of this project have access to the same information, including all conceptual, preliminary, or initial plans or specifications prepared by CONSULTANT pursuant to this Agreement.

11. Ability to Perform. CONSULTANT agrees and represents that it has the time, ability and professional expertise to perform the services required under this Agreement.

12. The Levine Act Disclosure. The Levine Act (Govt. Code, Section 84308) requires a Party (and its agent(s), if any) to a Proceeding before the City of Roseville that involves any action or consideration related to their contract, license, permit, or other entitlement for use, to disclose any campaign contributions made to CITY elected or appointed officers totaling more than $250 within the twelve (12) months prior to the CITY decision and while a proceeding is pending, and includes certain prohibitions on contribution activity thereafter. If applicable campaign contributions have been made by CONSULTANT and/or its agent(s), CONSULTANT is responsible for compliance, including for its disclosure obligations, if any, as further described at:

https://www.roseville.ca.us/government/departments/city_clerk/transparency/levine_act.

13. Governing Agreement. In the event of any conflict between this Agreement and its EXHIBITS, the provisions of this Agreement shall govern. In the event of any conflict between any of the EXHIBITS, the provisions of the first in order of attachment shall govern.

14. Assignment. CONSULTANT is employed to perform unique personal services. CONSULTANT shall not assign this Agreement without the prior written consent of CITY. CONSULTANT shall not employ or otherwise incur any obligation to pay other specialists or experts for services in connection with this Agreement, without prior written consent of CITY.

15. Independent Contractor. CONSULTANT, inclusive of its agents, officers, employees, volunteers, independent contractors, and subcontractors, shall act as an independent contractor, and covenants and agrees that it will conduct itself consistent with such status, that it will neither hold itself out as, nor claim to be, an officer or employee of CITY by reason of this Agreement.

CONSULTANT and CITY agree that: (a) CONSULTANT is free from the control and direction of CITY in connection with the performance of the work; (b) CONSULTANT is providing services directly to CITY; (c) CONSULTANT has and will maintain at all relevant times a business license; (d) CONSULTANT maintains a business location that is separate from CITY; (e) CONSULTANT is customarily engaged in an independently established business of the same nature as that involved in the work performed hereunder; (f) CONSULTANT actually contracts with other businesses to provide the same or similar services and maintains a clientele without restrictions from CITY; (g) CONSULTANT advertises and holds itself out to the public as available to provide the same or similar services; (h) CONSULTANT provides its own tools, vehicles, and equipment to perform the services; (i) CONSULTANT has negotiated its own rates; (j) CONSULTANT set its own hours and location

of work in accomplishing CITY's on-call needs; and (k) CONSULTANT has the right to control the manner and means of accomplishing the result desired and exercises its own expert independent judgement.

16. Representation and Warranties. CONSULTANT warrants that it has not employed or retained any company or person, other than a bona fide employee working for CONSULTANT, to solicit or secure this Agreement, and that it has not paid or agreed to pay any company or person, other than a bona fide employee, any fee, commission, percentage, brokerage fee, gift or any other consideration, contingent upon or resulting from the award or making of this Agreement. For breach or violation of this warranty, CITY shall have the right to terminate as void this Agreement, without liability, or, in its discretion, to deduct from the Agreement price or consideration, or otherwise recover, the full amount of such fee, commission, percentage, brokerage fee, gift or contingent fee.

17. Successors in Interest. This Agreement shall be binding upon the heirs, successors, executors, administrators and assigns of the respective parties hereto.

18. Copyright, Ownership and Use of Materials. All tangible materials ("Material") created or delivered pursuant to this Agreement is considered a work made for hire under the Copyright Act. To the extent such Material does not qualify as a work made for hire, CONSULTANT hereby assigns to CITY all right, title, and interest, including but not limited to all copyrights, in all Material created by CONSULTANT in its performance under this Agreement. Material constitutes the scope of work outlined in Exhibit A and attached hereto, and all written and other tangible expressions, including but not limited to, drawings, papers, documents, reports, surveys, renderings, exhibits, sketches, maps, models, prints, paintings or photographs, in any and all media or formats in which such materials have been created or are

maintained. All Material furnished by CONSULTANT is, and shall remain, the property of CITY.

CONSULTANT shall execute any documents necessary to effectuate such assignment. In the event that CONSULTANT uses, employs, designates, or retains any person or entity who is not an employee of CONSULTANT, to perform any work required of it pursuant to this Agreement, CONSULTANT shall require said person or entity to execute an agreement containing the preceding paragraph.

19. Termination of Agreement. The City may terminate this Agreement without cause by giving CONSULTANT ten (10) days advance written notice from the City Manager. CONSULTANT may terminate this Agreement without cause by giving CITY thirty (30) days advance written notice. In the event of termination through no fault of CONSULTANT, CITY shall compensate CONSULTANT for services performed as of the date of termination, upon the release to CITY of all Material hereunder, in any and all media or formats in which such materials have been created or are maintained. CITY retains the right to receive and use any Material, notwithstanding any termination or any dispute regarding the amount to be paid.

20. Attorney's Fees; Venue; Governing Law. If either party commences any legal action against the other party arising out of this Agreement or the performance thereof, the prevailing party in such action shall be entitled to recover its reasonable litigation expenses, including but not limited to, court costs, expert witness fees, discovery expenses, and attorneys' fees. Any action arising out of this Agreement shall be brought in Placer County, California, regardless of where else venue may lie. This Agreement shall be governed by and construed in accordance with the laws of the State of California.

21. Modification. This Agreement and each provision contained herein may be waived, amended, supplemented or eliminated only by mutual written agreement of the parties.

22. Severability. If any of the provisions contained in this Agreement is for any reason held invalid or unenforceable, such holding shall not affect the remaining provisions or the validity and enforceability of the Agreement as a whole.

23. Notices. Any notices to parties required by this Agreement shall be delivered personally or mailed, U.S. first class postage prepaid, addressed as follows:

CITY OF ROSEVILLE	CONSULTANT
Andre Baranov Project Supervisor 2005 Hilltop Circle, Suite 150 Roseville, CA 95747	Gregory Tonello AIA Principal 2237 Douglas Boulevard, Suite 160 Roseville, CA 95661

Either party may amend its address for notice by giving notice to the other party in writing.

24. Integrated Agreement. This is an integrated agreement and contains all of the terms, considerations, understanding and promises of the parties. It shall be read as a whole.

IN WITNESS WHEREOF, the City of Roseville, a municipal corporation, has authorized the execution of this Agreement in duplicate by its City Manager and attested to by its City Clerk under the authority of Resolution No. _____, adopted by the Council of the City of Roseville on the ___ day of _____, 20__, and CONSULTANT has caused this Agreement to be executed.

(SIGNATURES ON NEXT PAGE)

CITY OF ROSEVILLE, a municipal corporation

BY: _____
DOMINICK CASEY
City Manager

ATTEST:

BY: _____
CARMEN AVALOS
City Clerk

APPROVED AS TO FORM:

BY: _____
MICHELLE SHEIDENBERGER
City Attorney

APPROVED AS TO SUBSTANCE:

BY: _____
JASON SHYKOWSKI
Public Works Director

19SIX ARCHITECTS, a California corporation

BY: _____
its: PRESIDENT

and

BY: _____
its: TREASURER

EXHIBIT "A"

Project Understanding

We understand the Projects to be undertaken include Phase IB, and its three Projects and Phase 3, and its two Projects, as outlined in the RFP. A description of the Projects and our proposed Scope of Services to achieve City's objectives for those Projects are described herein.

Phase 1B Projects

- Phase 1B.1 - Parking Lot Expansion and Utilization of Existing Property
- Phase 1B.2 - Corporation Yard Road Design
- Phase 1B.3 – Relocation of Street Maintenance Building (Hilltop Circle Site)

Phase 3 Projects

- Phase 3.1 - Tenant Improvements
- Phase 3.2 - Existing Building Expansion

PHASE IB

PROJECT DESCRIPTION

Phase 1B.1 - Parking Lot Expansion and Utilization of Existing Property

Project is assumed to consist of the reconfiguration and expansion existing parking as shown on RFP Attachment D, "Existing Site Plan", dated 2/24/23 to configuration shown on RFP attachment "Proposed Site Plan Exhibit" dated 2/24/23 with integration of the following:

- Incorporate Low Impact Design (LID) measures from the West Placer Storm Water Quality Design Manual for the landscaping and for storm water management.
- Landscape design coordinated with required LID and Storm Water Quality features.
- Address concerns regarding site access, safety, building access, parking, and vehicle circulation on site.
- Incorporate Fleet Electrification design to facilitate long-term electrical vehicle charging equipment infrastructure installation.
- Incorporate Electrical Vehicle Charging Station (EVCS) infrastructure design to create an "EV ready" site for future EVCS installation.
- Architecturally integral design for 2 vehicular gate entrances, perimeter security fencing, two personnel gates including structural, electrical, communication/security design integrated with City card access system.
- Incorporate shade structures (solar panel canopies)
  - Shade structures with infrastructure for PV to be documented as a Bid Alternate
  - Shade structures with infrastructure for PV and full PV/battery storage to be documented as a separate Bid Alternate
- Incorporate Trash Enclosure
- Security, Access Control and Video Surveillance Improvements compatible with City's security platform (Ocularis) to include card key, cameras.
- The covered parking area adjacent to the SPCA Storage Building indicated as "New" is existing and will remain as is.

Phase 1B.2 - Corporation Yard Road Design

Project is assumed to consist of the reconfiguration of Corporation Yard Road shown on RFP Attachment E "Exhibit", dated 2/2024 with integration of the following:

- Impacts of the proposed PD Expansion including improvements necessary for access and function of the RPD Expansion, site access, and maintaining access to existing buildings and parcels.

- Impact on on-site trees and neighboring trees along Corporation Yard Road that may be affected by the development.Infrastructure needed to provide effective storm drain management at the existing culvert crossing in Corporation Yard Road.
- Road section to be coordinated with City and County agencies.

Phase 1B.3 – Relocation of Street Maintenance Building (Hilltop Circle Site)

Project is assumed to consist of construction of a 4,000 sf Street Maintenance Building located on less than 1 acre portion of parcel located at 2000 Hill Top Circle, Roseville, CA, RFP Attachment F, "Street Storage Building Replacement". dated 2/24/23, with integration of the following:

- 3,000 sf Pre-Engineered Metal Building (PEMB) with single user restroom.
- Less than 1 acre site improvements, parking, circulation, paving drainage, utilities and landscape.
- A portion of the Fleet Electrification Plan as it pertains to the new location.
- Infrastructure for future PV and battery storage

PHASE IB

SCOPE OF SERVICES

Scope of Services is typical for Phase all Projects in Phase 1B (1B.1 1B.2 and 1B.3)

Task 1 – Programming

Organize Existing Documentation

19six will organize **Existing Documentation** and analyze data that generates parameters and information program document.

Project Kickoff Meeting

19six will facilitate a Project Kickoff Meeting with the representatives of the Police Department, Facilities, and other City Staff, to communicate the Project Plan, proposed schedule, to gather background information, and solicit comments and questions to ascertain Program (User Needs) for the Project.

Program Document

19six will develop a **Program Document** defining quantitative and qualitative requirements and operational needs for the Projects.

Agency Review

19six will facilitate meeting(s) representatives of the Police Department, Facilities, other City Staff and City agencies having jurisdiction over the project to present the Projects and solicit initial feedback.

Progress Meetings

At stages appropriate to the progress of the work, 19six will facilitate in Progress Meetings with representatives of the Police Department, Facilities, other City Staff and other members of the Project Team to review progress, determine preferred alternates and secure approval to proceed.

Meetings

- Project Kickoff Meeting
- Staff Programming Interviews
- Progress Meetings
- Agency Review Meetings

Task 2 – Site Analysis and Conceptual Design

Task 2 activities will consist of the development of two and three-dimensional response to the program needs of the Projects in the form of Conceptual Plans based on the Program Document prepared in Task 1. The process will include an initial concept design charrette with representatives of representatives of the Police Department, Facilities, and other City Staff Conceptual Site & Building Design

For the **Parking Lot Expansion and Utilization of Existing Property and Corporation Yard Road Projects** 19six will prepare Site layout plans streets, access and circulation drives, parking, infrastructure/utility and drainage, exterior spaces. Develop conceptual level designs for each layout, including floor plans, site circulation plans, and related site areas such as parking areas, material storage, landscaping, fences, and gates.

For the **Street Maintenance Building** 19six will prepare alternative Site and Building layout plans and exterior elevations indicative of massing, volumes, and orientation, building access, building infrastructure/utility distribution area, interior spaces and circulation, exterior spaces, site access and circulation, vehicular parking and circulation. We will develop conceptual level designs including floor plan, site circulation plans, and related site areas such as parking areas, material storage, landscaping, fences, and gates.

Energy Concepting, and Basis of Design, and Sustainability
19 six will identify and evaluate alternative energy conservation strategies. Develop "benchmark" designs based on program requirements, Title 24 energy compliance requirements, resource conservation priorities, and chosen sustainable design strategies identified in Phase 1. Evaluate and make recommendations on energy strategies such as daylighting, building shading and glazing elements, photovoltaic power generation, solar space heating and domestic water heating, lighting, natural ventilation, high efficiency mechanical equipment, and water and material conservation.

Drainage Analysis
For Phase 1B.2 Design Development 19six's Civil Engineer will prepare Preliminary Drainage Memorandum. They will evaluate the drainage patterns at Corporation Yard Road to evaluate post developed peak flow rates and size conveyance pipes and prepare a tech memo. They will utilize open source LIDAR data outside of the Exhibit D survey limits to establish drainage shed areas from the south for evaluation of the existing cross street culvert located at the existing low point. The Civil Engineer will utilize the LIDAR data to evaluate the existing drainage shed anticipated to contribute to the culvert in question and will utilize rational method to generate anticipated peak runoff rates and evaluate capacity of the existing infrastructure to identify if the flow should be able to pass. If the culvert and downstream infrastructure are identified as being too small they will identify the size that the culvert would need to be however, design of drainage updaytes are excluded at this time as the scope is too ambiguous to budget at this early stage. As the existing site is generally developed as impervious surface we assume that no issues will be identified by this analysis. This effort does not include evaluation of the overall existing upstream or downstream drainage system. This task also includes development of LID calculations and the Preliminary Storm Water Quality Plan.

Code/Accessibility Analysis
19six will prepare a Building Code/Access Compliance Analysis identifying compliance criteria based on the California Building Code (CBC) and Americans with Disabilities Act (ADA).

Agency Review
19six will facilitate meeting(s) representatives of the Police Department, Facilities, other City Staff and City agencies having jurisdiction over the project to present Project progress and solicit feedback.

Progress Meetings
At stages appropriate to the progress of the work, 19six will facilitate in Progress Meetings with representatives of the Police Department, Facilities, other City Staff, and other members of the Project Team to review progress, determine preferred alternates and secure approval to proceed.

Meetings

- Progress Meetings
  - Parking Lot Expansion and Corporation Yard Road Projects
  - Street Maintenance Building
- Agency Review Meetings

Task 3 – Schematic Design

Task 3 activities will consist of the continued development of the Conceptual Design alternates approved by the City into Schematic Design alternatives and a final Schematic Design approach including:

For the **Parking Lot Expansion and Utilization of Existing Property and Corporation Yard Road Projects** preparation of Schematic level exhibits:

- Site Plan
- Site Demolition Plan
- Grading and Drainage Plans
- Paving Plans
- Utility Plans
- Laboratory Space Plan
- Roof Plans
- Exterior Elevations and Building Sections
- Reflected Ceiling Plans
- Preliminary structural systems layouts and design parameters for specialized systems and equipment design constraints.
- Define and set system service parameters for basic Mechanical, Plumbing, Electrical, Fire Sprinklers and Fire Alarm systems Energy and Sustainability

For the **Street Maintenance Building Project** preparation of Schematic level exhibits:

- Site Plan
- Site Demolition Plan
- Grading and Drainage Plans
- Paving Plans
- Utility Plans
- Site Plan
- Floor Plans/Space Plans
- Roof Plans
- Exterior Elevations and Building Sections
- Reflected Ceiling Plans
- Preliminary structural systems layouts and design parameters for specialized systems and equipment design constraints.
- Define and set system service parameters for basic Mechanical, Plumbing, Electrical, Fire Sprinklers and Fire Alarm systems.

Update Code/Accessibility Analysis

19six will update the Building Code/Access Compliance Analysis

Agency Review

19six will facilitate meeting(s) representatives of the Police Department, Facilities, other City Staff and City agencies having jurisdiction over the project to present Project progress and solicit feedback.

Progress Meetings

At stages appropriate to the progress of the work, 19six will facilitate in Progress Meetings with representatives of the Police Department, Facilities, other City Staff and other members of the Project Team to review progress, determine preferred alternates and secure approval to proceed.

Meetings

- Progress Meetings
  - Parking Lot Expansion and Corporation Yard Road Projects
  - Street Maintenance Building
- Agency Review Meetings

Task 4 – Design Development

Task 4 activities will consist of the further refinement of the approved Schematic Design, through the Design Development process. Design Development tasks will include establishing, evaluating, and selecting final design direction for the Site and Building Design and Engineering Systems and selections for the Projects.

Update Code/Accessibility Analysis

Based on Design Development exhibits 19six will update the Code/Access Compliance Analysis.

Agency Review

19six will facilitate meeting(s) representatives of the Police Department, Facilities, other City Staff and City agencies having jurisdiction over the project to present Project progress and solicit feedback.

Estimate of Probable Construction Cost

19six will prepare an Estimates of Probable Construction Cost. The Estimates will consider anticipated cost of construction, factors for escalation (inflationary effects on construction materials and labor), and contingencies (for project unknowns).

Progress Meetings

At stages appropriate to the progress of the work, 19six will facilitate in Progress Meetings with representatives of the Police Department, Facilities, other City Staff and other members of the Project Team to review progress, determine preferred alternates and secure approval to proceed.

Meetings

- Progress Meetings
  - Parking Lot Expansion and Corporation Yard Road Projects
  - Street Maintenance Building
- Agency Review Meetings

Task 5 – Construction Documents

Task 5 activities will consist of the preparation of final Construction Documents (Drawings and Project Manual/Specifications) setting forth in detail the construction requirements for the projects.

Update Code/Accessibility Analysis

19six will update the Building Code/Access Compliance Analysis

Estimate of Probable Construction Cost

Based on final construction documents 19six will update the Estimates of Probable Construction Cost.

Building Permit Processing

19six will be responsible for the processing of applications for Public Works and Building Permits and will submit, track and route of permit applications, resubmittals, and related documents.

Easement Abandonment Coordination
Assist with Easement abandonment coordination with the Department of General Services and associated State and County agencies for the purposes of closing Corporation Yard Road to through traffic.

Progress Meetings
At stages appropriate to the progress of the work, 19six will facilitate in Progress Meetings with representatives of the Police Department, Facilities, other City Staff and other members of the Project Team to review progress, determine preferred alternates and secure approval to proceed.

Meetings
- Progress Meetings
  - Parking Lot Expansion and Corporation Yard Road Projects
  - Street Maintenance Building
- Agency Review Meetings

Task 6 - Project Procurement

It is anticipated that the **Parking Lot Expansion and Utilization of Existing Property and Corporation Yard Road and Street Maintenance Building Project** will be bid as three separate, non-concurrent bid packages.

Task 6 activities will consist of 19six assisting the City in preparing the final bidding documents for each of the three Bids including:
- Incorporating Bid Alternates as directed by the City.
- Answering bid questions and preparation of any Addenda.
- Attend Pre-Bid Conferences as scheduled by the City Project Procurement.
- Assist City in selecting lowest qualified bidders.

Meetings
- Prebid Conferences
  - Parking Lot Expansion
  - Corporation Yard Road
  - Street Maintenance Building
- Post Bid Evaluation Meeting
  - Parking Lot Expansion
  - Corporation Yard Road
  - Street Maintenance Building

Task 7 - Project Construction Administration

It is anticipated that the **Parking Lot Expansion and Utilization of Existing Property and Corporation Yard Road and Street Maintenance Building Project** will be constructed as three separate, non-concurrent construction Projects by three different General Contractors.

Task 7 activities will consist of 19six assisting the City in connection with administration of the construction for each of the three separate Construction Contracts as follows:

- Attend Pre-Construction Conference and Mobilization Conference meetings.
- Facilitate periodic field visits.
- Provide consultant meeting notes and field observation reports.
- Review of Submittals and Shop Drawings.

- Assistance to the City in answering Contractor Requests for Information (RFI).
- Preparation of the punch list for Substantial Completion and assistance with Final Closeout.

Available as Additional Services when requested and authorized by the City:
- *Review Contractor's Applications for Payment and percentage of completion.*
- *Review of Proposed Change Orders (PCO's).*
- *Preparation of "Record Documents" reflecting bid addenda and changes to be based on Contractors "As Built Documents" field documents. Documents shall be provided in AutoCAD and .PDF formats.*
- *Approximately eleven (11) months after Substantial Completion, attend the Warranty Period inspection on site with the City and provide written notes and recommendations to the City.*

Construction Meetings

19six will attend construction meetings facilitated by the General Contractor.

On Site Meetings
Architectural staff will attend on-site construction meetings with the City and General Contractor.

Construction Field Observations
19six will visit the site at intervals appropriate to the stage of demolition and construction or as otherwise agreed in writing to become generally familiar with the progress and quality of the work and to determine in general if the work is proceeding in accordance with the contract documents and preparing related reports and communications. Observations to be concurrent with on-site Construction Meetings.

Site Observation Visits

Parking Lot Expansion and Utilization of Existing Property Project
Architect - up to six (6) Site Visits
Civil Engineer - up to six (6) Site Visits
Landscape Architect - up to two (2) Site Visits
Structural Engineer - up to two (2) Site Visits
Electrical Engineer - up to two (2) Site Visits

Corporation Yard Road Project
Architect - up to six (6) Site Visits
Civil Engineer - up to six (6) Site Visits
Landscape Architect - up to two (2) Site Visits
Electrical Engineer - up to two (2) Site Visits

Street Maintenance Building Project
Architect - up to six (6) Site Visits
Civil Engineer - up to six (6) Site Visits
Landscape Architect - up to two (2) Site Visits
Structural Engineer - up to two (2) Site Visits
Electrical Engineer - up to two (2) Site Visits
Mechanical Engineer - up to two (2) Site Visits

Punchlist Site Visits
Architect – One (1) punchlist site visits and one (1) final walk-through
All other Consultants – One (1) punchlist site visits and one (1) final walk-through

Phase 1B Deliverables

Parking Lot Expansion and Utilization of Existing Property

- Design Schedule
- Arborist Report for on-site trees and neighboring trees effected by the development.
- Survey for Corporation Yard Road, subject parcels, parcels with contributing impact on design if improvements on subject parcels.
- Plan Development Progress Sets
  - Pre-Design - 60%, 90% and 100 % Progress Sets
  - Preliminary Engineering - 60%, 90% and 100% Progress Sets
  - Construction Documents - 60%, 90% and Final Progress Sets
  - Permit Application Sets
  - Bid Documents Sets
  - Construction Sets
- Estimates of Probable Construction Cost
  - Preliminary Engineering - 100% Progress Set
  - Construction Documents - Final Progress Sets

Corporation Yard Road Design

- Design Schedule
- Arborist Report
- Survey
- Drainage Study
- Plan Development Progress Sets
  - Pre-Design - 60%, 90% and 100 % Progress Sets
  - Preliminary Engineering - 60%, 90% and 100% Progress Sets
  - Construction Documents - 60%, 90% and Final Progress Sets
  - Permit Application Sets
  - Bid Documents Sets
  - Construction Sets
- Estimates of Probable Construction Cost
  - Preliminary Engineering - 100% Progress Set
  - Construction Documents - Final Progress Sets

Street Maintenance Building (Hilltop Circle Site)

- Survey
- Plan Development Progress Sets
  - Pre-Design - 60%, 90% and 100 % Progress Sets
  - Preliminary Engineering - 60%, 90% and 100% Progress Sets
  - Construction Documents - 60%, 90% and Final Progress Sets
  - Permit Application Sets
  - Bid Documents Sets
  - Construction Sets
- Estimates of Probable Construction Cost
  - Preliminary Engineering - 100% Progress Set
  - Construction Documents - Final Progress Sets

Phase 3

Tenant Improvements and Existing Building Expansion

Project is assumed to consist of alterations and potential expansion of the Roseville Police Department Building as indicated on RFP Attachment G, "Existing and Alterations" drawings A1.1 and A1.2, dated 2/08/24, with integration of the following:

- **Phase 3.1 - Tenant Improvements** within the existing building envelope.
  - Based on refinement of Conceptual Design Attachment G and as may be modified by criteria defined in the Program Verification Tasks included in Scope of Services Task 1.
  - Barrier Removal Improvement (accessibility improvements) as required throughout the subject site up to the 20% threshold.
- **Phase 3.2 - Additions/Expansion** to existing building floor plates.
  - Based on refinement of Conceptual Design Attachment G and as may be modified by criteria defined in the Program Verification Tasks included in Scope of Services Task 1.
  - Barrier Removal Improvement (accessibility improvements) as required throughout the subject site.
  - .

Task 1 – Programming

Task 1 applies to Projects 3.1and 3.2

Organize Existing Documentation
19six will organize **Existing Documentation** and analyze data that generates parameters and information program document.

Project Kickoff Meeting
19six will facilitate a Project Kickoff Meeting with the representatives of the Police Department, Facilities, and other City Staff, to communicate the Project Plan, proposed schedule, to gather background information, and solicit comments and questions to ascertain Program (User Needs) for the Project.

Program Document
Based on the Program information prepared for the Master Plan Study, prepared by others, 19six will confirm information contained therein through interviews with Police Department and other City staff. Information gathered will be used to prepare an updated **Program Document** defining quantitative and qualitative requirements and operational needs for the Projects.

Agency Review
19six will facilitate meeting(s) representatives of the Police Department, Facilities, other City Staff and City agencies having jurisdiction over the project to present the Projects and solicit initial feedback.

Progress Meetings
At stages appropriate to the progress of the work, 19six will facilitate in Progress Meetings with representatives of the Police Department, Facilities, other City Staff and other members of the Project Team to review progress, determine preferred alternates and secure approval to proceed.

Meetings
- Project Kickoff Meeting
- Staff Programming Interviews
- Progress Meetings
- Agency Review Meetings

Task 2 – Conceptual Design

Task 2 applies to Projects 3.1and 3.2

Task 2 activities will consist of the development of two and three-dimensional response to the program needs of the Projects in the form of Conceptual Plans based on the Program Document prepared in Task 1. The process will include an initial concept design charrette with representatives of representatives of the Police

Department, Facilities, and other City Staff Conceptual Site & Building Design

For the **Phase 3.1, Tenant Improvement Project,** 19six will develop conceptual level space plans for each floor of the existing Police Department building. Plans will identify barrier removal improvements that may be required to comply with valuation thresholds of the California Building Code, Accessibility Requirements.

For the **Phase 3.2, Additions/Expansion Project**, 19six will prepare conceptual level space plans for 1) each floor of the existing Police Department building and 2) space plans for the potential Additions/Expansion areas.
Space plans will identify potential barrier removal improvements that may be required throughout the site and building that may BE required to comply with Building Accessibility Code thresholds. A structural feasibility review of potential Additions/Expansion to the building will be prepared with list of triggering thresholds for seismic and other code required upgrades.

Projects 3.1and 3.2 Conceptual Plans will be combined into a coordinated, long-term concept level plan including written narratives of MEP and Structural scoping describing the implications of proposed concept plans. Present findings to City staff. Final Concept Plans will include a list of triggering thresholds to Facilities staff and address comments from Public Works Facilities staff.

Energy Concepting, and Basis of Design, and Sustainability
19 six will identify and evaluate alternative energy conservation strategies. Develop "benchmark" designs based on program requirements, Title 24 energy compliance requirements, resource conservation priorities, and chosen sustainable design strategies identified in Phase 1. Evaluate and make recommendations on energy strategies such as daylighting, building shading and glazing elements, photovoltaic power generation, solar space heating and domestic water heating, lighting, natural ventilation, high efficiency mechanical equipment, and water and material conservation.

Code/Accessibility Analysis
19six will prepare a Building Code/Access Compliance Analysis identifying compliance criteria based on the California Building Code (CBC) and Americans with Disabilities Act (ADA).

Agency Review
19six will facilitate meeting(s) representatives of the Police Department, Facilities, other City Staff and City agencies having jurisdiction over the project to present Project progress and solicit feedback.

Estimate of Probable Construction Cost
Based on approved Conceptual Design 19six will prepare an Estimate of Probable Construction Cost. It is anticipated that the estimate will consider anticipated cost of construction, factors for escalation (inflationary effects on construction materials and labor), and contingencies (for project unknowns).

Progress Meetings
At stages appropriate to the progress of the work, 19six will facilitate in Progress Meetings with representatives of the Police Department, Facilities, other City Staff and other members of the Project Team to review progress, determine preferred alternates and secure approval of the Conceptual Design approach.

Meetings
- Progress Meetings
- Agency Review Meetings

Task 3 – Schematic Design

Task 3 applies to Project 3.1 only.

Schematic Design
Task 3 activities will consist of the continued development of the Conceptual Design alternates approved by the City into Schematic Design alternatives and a final Schematic Design approach including:

- Site Plan
- Site Demolition Plan
- Floor Plans/Space Plans
- Interior Design – Preliminary Visioning
- Roof Plans
- Reflected Ceiling Plans
- Preliminary structural systems impacts and design parameters for specialized systems and equipment design constraints.
- Define and set system service parameters for basic Mechanical, Plumbing, Electrical, Fire Sprinklers and Fire Alarm.
- Define and set system service parameters for Security systems including coordination with owner for the specification of all active security equipment and locations and security drawings for infrastructure and cabling.

Update Code/Accessibility Analysis
19six will update the Building Code/Access Compliance Analysis Update Code/Accessibility Analysis

Agency Review
19six will facilitate meeting(s) representatives of the Police Department, Facilities, other City Staff and City agencies having jurisdiction over the project to present Project progress and solicit feedback.

Design Review Permit Processing
Submittal and processing of Design Review Permits as may be required by the City of Roseville.

Estimate of Probable Construction Cost
19six will assist City's General Contractor with their responsibility for preparation of Estimates of Probable Construction Cost. It is anticipated that the estimates will consider anticipated cost of construction, factors for escalation (inflationary effects on construction materials and labor), and contingencies (for project unknowns). Estimate of Probable Construction Cost - Assist the Contractor in developing Construction Cost Estimates

Progress Meetings
At stages appropriate to the progress of the work, 19six will facilitate in Progress Meetings with representatives of the Police Department, Facilities, other City Staff and other members of the Project Team to review progress, determine preferred alternates and secure approval to proceed.
Meetings
- Progress Meetings
- Agency Review Meetings

Task 4 – Design Development
Task 4 applies to Project 3.1 only.

Task 4 activities will consist of the further refinement of the approved Schematic Design, through the Design Development process. Design Development tasks will include establishing, evaluating, and selecting final design direction for the Site and Building Design, Interior Design and Engineering Systems and selections for the Projects.

Update Code/Accessibility Analysis
Based on Design Development exhibits 19six will update the Code/Access Compliance Analysis.

Agency Review
19six will facilitate meeting(s) representatives of the Police Department, Facilities, other City Staff and City agencies having jurisdiction over the project to present Project progress and solicit feedback.

Estimate of Probable Construction Cost - Based on final Design Development documents 19six will assist the City's General Contractor with their responsibility for updating the Estimates of Probable Construction Cost.

Progress Meetings
At stages appropriate to the progress of the work, 19six will facilitate in Progress Meetings with representatives of the Police Department, Facilities, other City Staff and other members of the Project Team to review progress, determine preferred alternates and secure approval to proceed.

Meetings
- Progress Meetings
- Agency Review Meetings

Task 5 – Construction Documents

Task 5 applies to Project 3.1 only.

Task 5 activities will consist of the preparation of final Construction Documents (Drawings and Project Manual/Specifications) setting forth in detail the construction requirements for the projects.

Update Code/Accessibility Analysis
19six will update the Building Code/Access Compliance Analysis

Estimate of Probable Construction Cost
Based on final Construction Documents 19six will assist the City's General Contractor with their responsibility for updating the Estimates of Probable Construction Cost.

Building Permit Processing
19six will be responsible for the processing of applications for Public Works and Building Permits and will submit, track and route of permit applications, resubmittals, and related documents.

Progress Meetings
At stages appropriate to the progress of the work, 19six will facilitate in Progress Meetings with representatives of the Police Department, Facilities, other City Staff and other members of the Project Team to review progress, determine preferred alternates and secure approval to proceed.

Meetings
- Progress Meetings
- Agency Review Meetings

Task 6 - Project Procurement

Task 6 applies to Project 3.1 only.

Contractor Selection Process
At end of Conceptual Design Phase assist the City in selection of General Contractor.
- Review and comment on City's RFP for General Contractor Design Assistant Delivery Method.

- Assemble Design document for inclusion in RFP for General Contractor.
- Assist City in evaluation of General Contractor proposals.
- Participate in interview of General Contractors.
- Assist with selection of General Contractor.

Construction Cost Estimates
During Schematic Design, Design Development, and Construction Documentation Tasks assist the Contractor with their responsibility in preparing and updating in developing Construction Cost Estimates.

Meetings
Meetings with City Staff
General Contractor Interviews

Task 7 - Project Construction Administration

Task 7 applies to Project 3.1 only.

It is assumed that construction will occur over a 10-month period. **Task 7** activities will consist of 19six assisting the City in connection with administration of the contract for construction as follows:

- Attend Pre-Construction Conference and Mobilization Conference meetings.
- Facilitate periodic field visits.
- Provide consultant meeting notes and field observation reports.
- Review of Submittals and Shop Drawings.
- Assistance to the City in answering Contractor Requests for Information (RFI).
- Preparation of the punch list for Substantial Completion and assistance with Final Closeout.

Available as Additional Services when requested and authorized by the City:
- *Review Contractor's Applications for Payment and percentage of completion.*
- *Review of Proposed Change Orders (PCO's).*
- *Preparation of "Record Documents" reflecting bid addenda and changes to be based on Contractors "As Built Documents" field documents. Documents shall be provided in AutoCAD and .PDF formats.*
- *Approximately eleven (11) months after Substantial Completion, attend the Warranty Period inspection on site with the City and provide written notes and recommendations to the City.*

Construction Meetings

19six will attend construction meetings facilitated by the General Contractor.

On Site Meetings
Architectural staff will attend on-site construction meetings with the City and General Contractor.

Construction Field Observations
19six will visit the site at intervals appropriate to the stage of demolition and construction or as otherwise agreed in writing to become generally familiar with the progress and quality of the work and to determine in general if the work is proceeding in accordance with the contract documents and preparing related reports and communications. Observations to be concurrent with on-site Construction Meetings

Site Observation Visits
Architect - up to twelve (12) Site Visits
Structural Engineer - up to four (4) Site Visits
Mechanical Engineer - up to four (4) Site Visits
Electrical Engineer - up to four (4) Site Visits

Punchlist Site Visits

Architect – One (1) punchlists site visits and one (1) final walk-through
All other Consultants – One (1) punchlist site visits and one (1) final walk-through

Phase 3 Deliverables

- **Design Schedule**
- **Arborist Report** (For on-site trees and immediately neighboring trees that may be effected by potential development.)
- **Survey**
- Plan Development Progress Sets
    - Construction Documents - 50%, 75%, 90% and Final Progress Sets
    - Permit Application Sets
- Estimates of Probable Construction Cost
    - Conceptual Design - 100% Progress Set
    - Construction Documents - Final Progress Sets

Other Services Recommended for inclusion in Architects Scope

These services can be provided by 19six as Additional Services to those described in Scope of Work above.

- Design and Specification of Furniture, Fixtures and Equipment.
- Commissioning Agent
- Submitting and processing applications for sustainability rating systems registration or certification, ie:LEED.

City Provided Information

It is anticipated that the City will provide the following information:

- Plans and specifications for existing Police Department Building and Site (drawings In PDF and AutoCAD format and Specifications in PDF and Word formats)
    - Architectural, Landscape, Civil, Structural, Mechanical, Plumbing and Electrical and other Disciplines
- Space Requirements Study (Program) as referenced in RFP.
- Facilities Master Plan Design Exhibits as referenced in RFP.
- Project 3.1 Estimates of Probable Cost starting at Schematic Design
- CAD Model (Revit) of Police Department Building
- Roseville Fleet Electrification Plan
- Geotechnical Reports
- Access Compliance Documentation

Roseville Police Department Expansion

City of Roseville

19six Architects

Assigned Staff per Task

Labor Hour Estimates

Rev 2 7/24/2024

Architecture / Interiors

		Team Members								Total Hours
		Principal I	Project Manager	Architect III	Architect I	Interior Designer I	Design Profess I	Tech Staff	Spec Writer	QA/QC	
Phase 1B.1 - Parking Lot Expansion											
0	Task 1 Programming	2	2								4
0	Task 2 Site Analysis and Conceptual Design	2	9		3		18	3		1	36
0	Task 3 Schematic Design	2	9		3		18	3		2	37
0	Task 4 Design Development	2	12		2		18	3		2	39
0	Task 5 Construction Documents	2	12		1		24	3	18	2	62
0	Task 6 Project Procurement	1	4					2			7
0	Task 7 Project Construction Administration	2	24					24			50
0	0 0										0
0	0 0										0
0	0 0										0
0	Meetings										0
0	Project Kickoff Meeting										0
0	Staff Programming Interviews										0
0	Client Progress Meetings										0
0	Team Meetings										0
0	Agency Meetings										0
	SUB-TOTAL - PHASE 1B.1	13	72	0	9	0	78	38	18	7	235
Phase 1B.2 - Corporation Yard Street											
0	Task 1 Programming	1	3					1			5
0	Task 2 Site Analysis and Conceptual Design	1	9				6	3		1	20
0	Task 3 Schematic Design	1	9				6	3		2	21
0	Task 4 Design Development	2	12				9	3		2	28
0	Task 5 Construction Documents	2	12				12	3	18	3	50
0	Task 6 Project Procurement	1	4					2			7
0	Task 7 Project Construction Administration	2	24					24			50
0	0 0										0
0	0 0										0
0	0 0										0
0	0										0
0	Meetings										0
0	Client Progress Meetings										0
0	Team Meetings										0
0	Agency Meetings										0
0	0										0
	SUB-TOTAL - PHASE 1B.2	10	73	0	0	0	33	39	18	8	181
Phase 1b.3 - Streets Maintenance Building											
0	Task 1 Programming		3								3
0	Task 2 Site Analysis and Conceptual Design	2	18		9		18	2		1	50
0	Task 3 Schematic Design	2	18		9		18	2		2	51
0	Task 4 Design Development	2	18		4		24	3		4	55
0	Task 5 Construction Documents	2	24		4		54	2	18	4	108
0	Task 6 Project Procurement	1	9					18			28
0	Task 7 Project Construction Administration	2	48				18	12			80
0	0 0										0
0	0 0										0
0	0 0										0
0	0										0
0	Meetings										0
0	Client Progress Meetings										0
0	Team Meetings										0
0	Agency Meetings										0
0	0										0
	SUB-TOTAL - PHASE 1B.3	11	138	0	26	0	132	39	18	11	375
Phase 3.1 - PD Building Tenant Improvements											
0	Task 1 Programming	2	9		4	18	4	3			40
0	Task 2 Site Analysis and Conceptual Design	2	9		9	24	12	6		1	63
0	Task 3 Schematic Design	2	18		9	48	48	6		2	133
0	Task 4 Design Development	4	24		9	48	48	9		8	150
0	Task 5 Construction Documents	6	90		12	120	120	12	20	12	392
0	Task 6 Project Procurement	2	9			9	9	3			32
0	Task 7 Project Construction Administration	4	150		6	48	48	48			304
0	0 0										0
0	0 0										0
0	0 0										0
0											0
0	Meetings										0
0	Client Progress Meetings										0
0	Team Meetings										0
0	Agency Meetings										0
0	0										0
	SUB-TOTAL - PHASE 3.1	22	309	0	49	315	289	97	20	23	1114
Phase 3.2 - PD Building Addition/Expansion											
0	Task 1 Programming	2	9	6		4	2	3			26
0	Task 2 Site Analysis and Conceptual Design	4	32	27		36	60	9		4	172
0	0 0										0
0	0 0										0
0	0 0										0
0	0 0										0
0	0 0										0
0	0 0										0
0	0 0										0
0	0 0										0
0	0										0
0	Meetings										0
0	Client Progress Meetings										0
0	Team Meetings										0
0	Agency Meetings										0
0	0										0
	SUB-TOTAL - PHASE 3.2	6	41	33	0	40	62	12	0	4	198
~~**Phase 3.3 - PD New Two Story Building (Master Plans Phase 3)**~~											
0	~~Task 1 Programming~~										0
0	~~Task 2 Site Analysis and Conceptual Design~~										0
0	0 0										0
0	0 0										0
0	0 0										0
0	0 0										0
0	0 0										0
0	0 0										0
0	0 0										0
0	0										0
0	Meetings										0
0	Client Progress Meetings										0
0	Team Meetings										0
0	Agency Meetings										0
0	0										0
	SUB-TOTAL - PHASE 3.3	0	0	0	0	0	0	0	0	0	0

No. of Mtgs

Roseville Police Department Expansion

City of Roseville

19six Architects

Assigned Staff per Task

Labor Hour Estimates

Civil Engineer

		Team Members									
		Principal II	Principal I	Project Engineer I	Assistant Engineer I	x	x	x	x	x	Total Hours
Phase 1B.1 - Parking Lot Expansion											
0 Task 1 Programming		1	2	4							7
0 Task 2 Site Analysis and Conceptual Design			2	4	16						22
0 Task 3 Schematic Design		1.5	8	16							25.5
0 Task 4 Design Development		2	40	60	112						214
0 Task 5 Construction Documents		7.5	82	136	268						493.5
0 Task 6 Project Procurement											0
0 Task 7 Project Construction Administration			40	40							80
0 0 0											0
0 0 0											0
0 0 0											0
0 Meetings	*No. of Mtgs*		80								80
0 Internal Project Kickoff Meeting	1										0
0 Staff Programming Interviews	2										0
0 Client Progress Meetings	3										0
0 Team Meetings	10										0
0 Agency Meetings	5										0
SUB-TOTAL - PHASE 1B.1		12	254	260	396	0	0	0	0	0	922
Phase 1B.2 - Corporation Yard Street											
0 Task 1 Programming		1	2	4							7
0 Task 2 Site Analysis and Conceptual Design			2	4	12						18
0 Task 3 Schematic Design			4	16							20
0 Task 4 Design Development		1.5	28	56	120						205.5
0 Task 5 Construction Documents		6	61	80	168						315
0 Task 6 Project Procurement											0
0 Task 7 Project Construction Administration			20	60							80
0 0 0											0
0 0 0											0
0 0 0											0
0 0											0
0 Meetings	*No. of Mtgs*		60								60
0 Client Progress Meetings	1										0
0 Team Meetings	5										0
0 Agency Meetings	4										0
0 0											0
SUB-TOTAL - PHASE 1B.2		9	177	220	300	0	0	0	0	0	706
Phase 1b.3 - Streets Maintenance Building											
0 Task 1 Programming		1	2	4							7
0 Task 2 Site Analysis and Conceptual Design			2	4	12						18
0 Task 3 Schematic Design			3	12							15
0 Task 4 Design Development		3.5	20	44	96						163.5
0 Task 5 Construction Documents		3	33	64	144						244
0 Task 6 Project Procurement											0
0 Task 7 Project Construction Administration			30	30							60
0 0 0											0
0 0 0											0
0 0 0											0
0 0											0
0 Meetings	*No. of Mtgs*		60								60
0 Client Progress Meetings	1										0
0 Team Meetings	5										0
0 Agency Meetings	4										0
0 0											0
SUB-TOTAL - PHASE 1B.3		8	150	158	252	0	0	0	0	0	568
Phase 3.1 - PD Building Tenant Improvements											
0 Task 1 Programming											0
0 Task 2 Site Analysis and Conceptual Design											0
0 Task 3 Schematic Design											0
0 Task 4 Design Development			1	8	16						25
0 Task 5 Construction Documents			2.5	22	18						42.5
0 Task 6 Project Procurement											0
0 Task 7 Project Construction Administration			10								10
0 0 0											0
0 0 0											0
0 0 0											0
0 #REF!											0
0 Meetings	*No. of Mtgs*										0
0 Client Progress Meetings											0
0 Team Meetings											0
0 Agency Meetings											0
0 0											0
SUB-TOTAL - PHASE 3.1		0	14	30	34	0	0	0	0	0	78
Phase 3.2 - PD Building Addition/Expansion											
0 Task 1 Programming											0
0 Task 2 Site Analysis and Conceptual Design											0
0 0 0											0
0 0 0											0
0 0 0											0
0 0 0											0
0 0 0											0
0 0 0											0
0 0 0											0
0 0 0											0
0 0											0
0 Meetings	*No. of Mtgs*		12								12
0 Client Progress Meetings											0
0 Team Meetings	2										0
0 Agency Meetings	1										0
0 0											0
SUB-TOTAL - PHASE 3.2		0	12	0	0	0	0	0	0	0	12
~~**Phase 3.3 - PD New Two Story Building (Master Plans Phase 2)**~~											
0 ~~Task 1 Programming~~											0
0 ~~Task 2 Site Analysis and Conceptual Design~~											0
0 0 0											0
0 0 0											0
0 0 0											0
0 0 0											0
0 0 0											0
0 0 0											0
0 0 0											0
0 0 0											0
0 0											0
0 Meetings	*No. of Mtgs*										0
0 Client Progress Meetings											0
0 Team Meetings											0
0 Agency Meetings											0
0 0											0
SUB-TOTAL - PHASE 3.3		0	0	0	0	0	0	0	0	0	0

Roseville Police Department Expansion

City of Roseville

19six Architects

Assigned Staff per Task

Labor Hour Estimates

Rev 2 7/24/2024

Landscape Architect

		Team Members									
		Principal	Landscape Architect	Landscape Designer	x	x	x	x	x	x	Total Hours
Phase 1B.1 - Parking Lot Expansion											
0	Task 1 Programming										0
0	Task 2 Site Analysis and Conceptual Design										0
0	Task 3 Schematic Design	1	8	2							11
0	Task 4 Design Development	1	8	14							23
0	Task 5 Construction Documents	1	8	34							43
0	Task 6 Project Procurement	1	3	0							4
0	Task 7 Project Construction Administration	1	7	0							8
0	0 0										0
0	0 0										0
0	0 0										0
0	Meetings										0
0	Internal Project Kickoff Meeting										0
0	Staff Programming Interviews										0
0	Client Progress Meetings										0
0	Team Meetings										0
0	Agency Meetings										0
	SUB-TOTAL - PHASE 1B.1	5	34	50	0	0	0	0	0	0	89
Phase 1B.2 - Corporation Yard Street											
0	Task 1 Programming										0
0	Task 2 Site Analysis and Conceptual Design										0
0	Task 3 Schematic Design	1	8	2							11
0	Task 4 Design Development	1	4	8							13
0	Task 5 Construction Documents	1	8	24							33
0	Task 6 Project Procurement	1	1								2
0	Task 7 Project Construction Administration	1	4								5
0	0 0										0
0	0 0										0
0	0 0										0
0	0										0
0	Meetings										0
0	Client Progress Meetings										0
0	Team Meetings										0
0	Agency Meetings										0
0	0										0
	SUB-TOTAL - PHASE 1B.2	5	25	34	0	0	0	0	0	0	64
Phase 1b.3 - Streets Maintenance Building											
0	Task 1 Programming										0
0	Task 2 Site Analysis and Conceptual Design										0
0	Task 3 Schematic Design	1	8	2							11
0	Task 4 Design Development	1	4	8							13
0	Task 5 Construction Documents	1	8	24							33
0	Task 6 Project Procurement	1	1								2
0	Task 7 Project Construction Administration	1	4								5
0	0 0										0
0	0 0										0
0	0 0										0
0	0										0
0	Meetings										0
0	Client Progress Meetings										0
0	Team Meetings										0
0	Agency Meetings										0
0	0										0
	SUB-TOTAL - PHASE 1B.3	5	25	34	0	0	0	0	0	0	64
Phase 3.1 - PD Building Tenant Improvements											
0	Task 1 Programming										0
0	Task 2 Site Analysis and Conceptual Design										0
0	Task 3 Schematic Design										0
0	Task 4 Design Development										0
0	Task 5 Construction Documents										0
0	Task 6 Project Procurement										0
0	Task 7 Project Construction Administration										0
0	0 0										0
0	0 0										0
0	0 0										0
0	#REF!										0
0	Meetings										0
0	Client Progress Meetings										0
0	Team Meetings										0
0	Agency Meetings										0
0	0										0
	SUB-TOTAL - PHASE 3.1	0	0	0	0	0	0	0	0	0	0
Phase 3.2 - PD Building Addition/Expansion											
0	Task 1 Programming										0
0	Task 2 Site Analysis and Conceptual Design										0
0	0 0										0
0	0 0										0
0	0 0										0
0	0 0										0
0	0 0										0
0	0 0										0
0	0 0										0
0	0										0
0	Meetings										0
0	Client Progress Meetings										0
0	Team Meetings										0
0	Agency Meetings										0
0	0										0
	SUB-TOTAL - PHASE 3.2	0	0	0	0	0	0	0	0	0	0
~~**Phase 3.3 - PD New Two Story Building (Master Plans Phase 2)**~~											
0	~~Task 1 Programming~~										0
0	~~Task 2 Site Analysis and Conceptual Design~~										0
0	0 0										0
0	0 0										0
0	0 0										0
0	0 0										0
0	0 0										0
0	0 0										0
0	0 0										0
0	0										0
0	Meetings										0
0	Client Progress Meetings										0
0	Team Meetings										0
0	Agency Meetings										0
0	0										0
	SUB-TOTAL - PHASE 3.3	0	0	0	0	0	0	0	0	0	0

No. of Mtgs

No. of Mtgs

No. of Mtgs

No. of Mtgs

No. of Mtgs

Roseville Police Department Expansion

City of Roseville

19six Architects

Assigned Staff per Task

Labor Hour Estimates

Rev 2 7/24/2024

Structural Engineer

		Team Members									
		Sr Principal	Principal	Sr Professional	Professional	SrTech	Tech	x	x	x	Total Hours
Phase 1B.1 - Parking Lot Expansion											
0	Task 1 Programming										0
0	Task 2 Site Analysis and Conceptual Design										0
0	Task 3 Schematic Design										0
0	Task 4 Design Development	2			2						4
0	Task 5 Construction Documents	2			4		4				10
0	Task 6 Project Procurement	1			2						3
0	Task 7 Project Construction Administration	2			4						6
0	0 0										0
0	0 0										0
0	0 0										0
0	Meetings										0
0	Internal Project Kickoff Meeting										0
0	Staff Programming Interviews										0
0	Client Progress Meetings										0
0	Team Meetings										0
0	Agency Meetings										0
	SUB-TOTAL - PHASE 1B.1	7	0	0	12	0	4	0	0	0	23

Meetings	No. of Mtgs
Internal Project Kickoff Meeting	1
Staff Programming Interviews	
Client Progress Meetings	1
Team Meetings	2
Agency Meetings	2

Phase 1B.2 - Corporation Yard Street											
0	Task 1 Programming										0
0	Task 2 Site Analysis and Conceptual Design										0
0	Task 3 Schematic Design										0
0	Task 4 Design Development										0
0	Task 5 Construction Documents										0
0	Task 6 Project Procurement										0
0	Task 7 Project Construction Administration										0
0	0 0										0
0	0 0										0
0	0 0										0
0	0										0
0	Meetings										0
0	Client Progress Meetings										0
0	Team Meetings										0
0	Agency Meetings										0
0	0										0
	SUB-TOTAL - PHASE 1B.2	0	0	0	0	0	0	0	0	0	0

Meetings	No. of Mtgs
Client Progress Meetings	
Team Meetings	
Agency Meetings	

Phase 1b.3 - Streets Maintenance Building											
0	Task 1 Programming										0
0	Task 2 Site Analysis and Conceptual Design										0
0	Task 3 Schematic Design	2		4		2	4				12
0	Task 4 Design Development	2	4	4	4	2	8				24
0	Task 5 Construction Documents	2	4	4	16	8	8				42
0	Task 6 Project Procurement	1			4						5
0	Task 7 Project Construction Administration	2		4	8	2	2				18
0	0 0										0
0	0 0										0
0	0 0										0
0	0										0
0	Meetings										0
0	Client Progress Meetings										0
0	Team Meetings										0
0	Agency Meetings										0
0	0										0
	SUB-TOTAL - PHASE 1B.3	9	8	16	32	14	22	0	0	0	101

Meetings	No. of Mtgs
Client Progress Meetings	1
Team Meetings	2
Agency Meetings	1
	2

Phase 3.1 - PD Building Tenant Improvements											
0	Task 1 Programming										0
0	Task 2 Site Analysis and Conceptual Design										0
0	Task 3 Schematic Design										0
0	Task 4 Design Development	2	4	4	4	2	8				24
0	Task 5 Construction Documents	2	4	4	16	8	8				42
0	Task 6 Project Procurement	1			4						5
0	Task 7 Project Construction Administration	1		2	8	2					13
0	0 0										0
0	0 0										0
0	0 0										0
0	#REF!										0
0	Meetings										0
0	Client Progress Meetings										0
0	Team Meetings										0
0	Agency Meetings										0
0	0										0
	SUB-TOTAL - PHASE 3.1	6	8	10	32	12	16	0	0	0	84

Meetings	No. of Mtgs
Client Progress Meetings	1
Team Meetings	2
Agency Meetings	

Phase 3.2 - PD Building Addition/Expansion											
0	Task 1 Programming	4		4							8
0	Task 2 Site Analysis and Conceptual Design	8		12		8	8			4	36
0	0 0										0
0	0 0										0
0	0 0										0
0	0 0										0
0	0 0										0
0	0 0										0
0	0 0										0
0	0 0										0
0	0										0
0	Meetings										0
0	Client Progress Meetings										0
0	Team Meetings										0
0	Agency Meetings										0
0	0										0
	SUB-TOTAL - PHASE 3.2	12	0	16	0	8	8	0	0	0	44

Meetings	No. of Mtgs
Client Progress Meetings	1
Team Meetings	2
Agency Meetings	

~~**Phase 3.3 - PD New Two Story Building (Master Plans Phase 3)**~~											
0	~~Task 1 Programming~~										0
0	~~Task 2 Site Analysis and Conceptual Design~~										0
0	0 0										0
0	0 0										0
0	0 0										0
0	0 0										0
0	0 0										0
0	0 0										0
0	0 0										0
0	0 0										0
0	0										0
0	Meetings										0
0	Client Progress Meetings										0
0	Team Meetings										0
0	Agency Meetings										0
0	0										0
	SUB-TOTAL - PHASE 3.3	0	0	0	0	0	0	0	0	0	0

Meetings	No. of Mtgs
Client Progress Meetings	
Team Meetings	
Agency Meetings	

Roseville Police Department Expansion

City of Roseville

19six Architects

Assigned Staff per Task

Labor Hour Estimates

Rev 2 7/24/2024

Mechanical Engineer

		Team Members									Total Hours
		Principal	Proj Mgr	Engineer	Des	Admin	x	x	x	x	
Phase 1B.1 - Parking Lot Expansion											
0	Task 1 Programming										0
0	Task 2 Site Analysis and Conceptual Design										0
0	Task 3 Schematic Design										0
0	Task 4 Design Development										0
0	Task 5 Construction Documents										0
0	Task 6 Project Procurement										0
0	Task 7 Project Construction Administration										0
0	0 0										0
0	0 0										0
0	0 0										0
0	0										0
0	Meetings										0
0	Internal Project Kickoff Meeting										0
0	Staff Programming Interviews										0
0	Client Progress Meetings										0
0	Team Meetings										0
0	Agency Meetings										0
	SUB-TOTAL - PHASE 1B.1	0	0	0	0	0	0	0	0	0	0
Phase 1B.2 - Corporation Yard Street											
0	Task 1 Programming										0
0	Task 2 Site Analysis and Conceptual Design										0
0	Task 3 Schematic Design										0
0	Task 4 Design Development										0
0	Task 5 Construction Documents										0
0	Task 6 Project Procurement										0
0	Task 7 Project Construction Administration										0
0	0 0										0
0	0 0										0
0	0 0										0
0	0										0
0	Meetings										0
0	Client Progress Meetings										0
0	Team Meetings										0
0	Agency Meetings										0
0	0										0
	SUB-TOTAL - PHASE 1B.2	0	0	0	0	0	0	0	0	0	0
Phase 1b.3 - Streets Maintenance Building											
0	Task 1 Programming										0
0	Task 2 Site Analysis and Conceptual Design										0
0	Task 3 Schematic Design										0
0	Task 4 Design Development	4	8	24	4	4					44
0	Task 5 Construction Documents	4	8	20	16	4					52
0	Task 6 Project Procurement	2	4								6
0	Task 7 Project Construction Administration	2	6	16		2					26
0	0 0										0
0	0 0										0
0	0 0										0
0	0										0
0	Meetings										0
0	Client Progress Meetings										0
0	Team Meetings										0
0	Agency Meetings										0
0	0										0
	SUB-TOTAL - PHASE 1B.3	12	26	60	20	10	0	0	0	0	128
Phase 3.1 - PD Building Tenant Improvements											
0	Task 1 Programming										0
0	Task 2 Site Analysis and Conceptual Design	4	6	4							14
0	Task 3 Schematic Design	8	12	8							28
0	Task 4 Design Development	8	12	40	16	8					84
0	Task 5 Construction Documents	8	16	54	32	16					126
0	Task 6 Project Procurement	4	6	6							16
0	Task 7 Project Construction Administration	4	12	40	0	20					76
0	0 0										0
0	0 0										0
0	0 0										0
0	#REF!										0
0	Meetings										0
0	Client Progress Meetings										0
0	Team Meetings										0
0	Agency Meetings										0
0	0										0
	SUB-TOTAL - PHASE 3.1	36	64	152	48	44	0	0	0	0	344
Phase 3.2 - PD Building Addition/Expansion											
0	Task 1 Programming	4	8	4							16
0	Task 2 Site Analysis and Conceptual Design	4	8	12							24
0	0 0										0
0	0 0										0
0	0 0										0
0	0 0										0
0	0 0										0
0	0 0										0
0	0 0										0
0	0 0										0
0	0										0
0	Meetings										0
0	Client Progress Meetings										0
0	Team Meetings										0
0	Agency Meetings										0
0	0										0
	SUB-TOTAL - PHASE 3.2	8	16	16	0	0	0	0	0	0	40
~~**Phase 3.3 - PD New Two Story Building (Master Plans Phase 2)**~~											
0	~~Task 1 Programming~~										0
0	~~Task 2 Site Analysis and Conceptual Design~~										0
0	0 0										0
0	0 0										0
0	0 0										0
0	0 0										0
0	0 0										0
0	0 0										0
0	0 0										0
0	0										0
0	Meetings										0
0	Client Progress Meetings										0
0	Team Meetings										0
0	Agency Meetings										0
0	0										0
	SUB-TOTAL - PHASE 3.3	0	0	0	0	0	0	0	0	0	0

No. of Mtgs

Roseville Police Department Expansion

City of Roseville

19six Architects

Assigned Staff per Task

Labor Hour Estimates

Rev 2 7/24/2024

Electrical Engineer

		Team Members									
		Principal	Proj Mgr	Engineer	Des	Admin	PV	Security			Total Hours
Phase 1B.1 - Parking Lot Expansion											
0	Task 1 Programming										0
0	Task 2 Site Analysis and Conceptual Design										0
0	Task 3 Schematic Design										0
0	Task 4 Design Development	2	4	8	12		8	8			42
0	Task 5 Construction Documents	1	4	12	12	4	12	8			53
0	Task 6 Project Procurement	1	4	4	8		2	2			21
0	Task 7 Project Construction Administration	1	2	16	8		4	4			35
0	0 0										0
0	0 0										0
0	0 0										0
0	Meetings										0
0	Internal Project Kickoff Meeting	1	1	1				1			4
0	Staff Programming Interviews										0
0	Client Progress Meetings		2	2			2	2			8
0	Team Meetings		2	2							4
0	Agency Meetings										0
	SUB-TOTAL - PHASE 1B.1	6	19	45	40	4	28	25	0	0	167
Phase 1B.2 - Corporation Yard Street											
0	Task 1 Programming										0
0	Task 2 Site Analysis and Conceptual Design										0
0	Task 3 Schematic Design										0
0	Task 4 Design Development		2	4	8						14
0	Task 5 Construction Documents		1	2	4	2					9
0	Task 6 Project Procurement										0
0	Task 7 Project Construction Administration		1	16							17
0	0 0										0
0	0 0										0
0	0 0										0
0	0										0
0	Meetings										0
0	Client Progress Meetings	1	1								2
0	Team Meetings										0
0	Agency Meetings										0
0	0										0
	SUB-TOTAL - PHASE 1B.2	1	5	22	12	2	0	0	0	0	42
Phase 1b.3 - Streets Maintenance Building											
0	Task 1 Programming										0
0	Task 2 Site Analysis and Conceptual Design										0
0	Task 3 Schematic Design	2	6	8	4		8	6			34
0	Task 4 Design Development	1	6	6	4		8	4			29
0	Task 5 Construction Documents	1	6	6	6	4	4	4			31
0	Task 6 Project Procurement	2	4				2	2			10
0	Task 7 Project Construction Administration	2	6	16		2		6			32
0	0 0										0
0	0 0										0
0	0 0										0
0	0										0
0	Meetings										0
0	Client Progress Meetings						2				2
0	Team Meetings										0
0	Agency Meetings										0
0	0										0
	SUB-TOTAL - PHASE 1B.3	8	28	36	14	6	24	22	0	0	138
Phase 3.1 - PD Building Tenant Improvements											
0	Task 1 Programming	4	8	4				4			20
0	Task 2 Site Analysis and Conceptual Design	4	8	8				4			24
0	Task 3 Schematic Design	2	8	28	16			4			58
0	Task 4 Design Development	4	8	28	20	8		4			72
0	Task 5 Construction Documents	4	8	16	16			8			52
0	Task 6 Project Procurement	2	12	24	0	8		4			50
0	Task 7 Project Construction Administration							12			12
0	0 0										0
0	0 0										0
0	0 0										0
0	#REF!										0
0	Meetings										0
0	Client Progress Meetings										0
0	Team Meetings										0
0	Agency Meetings										0
0	0										0
	SUB-TOTAL - PHASE 3.1	20	52	108	52	16	0	40	0	0	288
Phase 3.2 - PD Building Addition/Expansion											
0	Task 1 Programming	4	8	4							16
0	Task 2 Site Analysis and Conceptual Design	4	8	12							24
0	0 0										0
0	0 0										0
0	0 0										0
0	0 0										0
0	0 0										0
0	0 0										0
0	0 0										0
0	0 0										0
0	0										0
0	Meetings										0
0	Client Progress Meetings										0
0	Team Meetings										0
0	Agency Meetings										0
0	0										0
	SUB-TOTAL - PHASE 3.2	8	16	16	0	0	0	0	0	0	40
~~**Phase 3.3 - PD New Two Story Building (Master Plans Phase 3)**~~											
0	~~Task 1 Programming~~										0
0	~~Task 2 Site Analysis and Conceptual Design~~										0
0	0 0										0
0	0 0										0
0	0 0										0
0	0 0										0
0	0 0										0
0	0 0										0
0	0 0										0
0	0 0										0
0	0										0
0	Meetings										0
0	Client Progress Meetings										0
0	Team Meetings										0
0	Agency Meetings										0
0	0										0
	SUB-TOTAL - PHASE 3.3	0	0	0	0	0	0	0	0	0	0

Meetings	No. of Mtgs
Internal Project Kickoff Meeting	
Staff Programming Interviews	
Client Progress Meetings	
Team Meetings	
Agency Meetings	

Roseville Police Department Expansion

City of Roseville

19six Architects

Assigned Staff per Task

Labor Hour Estimates

Rev 2 7/24/2024

Acoustical Engineer

		Team Members									
		Principal	x	x	x	x	x	x	x	x	Total Hours
Phase 1B.1 - Parking Lot Expansion											
0	Task 1 Programming										0
0	Task 2 Site Analysis and Conceptual Design										0
0	Task 3 Schematic Design										0
0	Task 4 Design Development										0
0	Task 5 Construction Documents										0
0	Task 6 Project Procurement										0
0	Task 7 Project Construction Administration										0
0	0 0										0
0	0 0										0
0	0 0										0
0	Meetings										0
0	Project Kickoff Meeting										0
0	Staff Programming Interviews										0
0	Client Progress Meetings										0
0	Team Meetings										0
0	Agency Meetings										0
	No. of Mtgs										
	SUB-TOTAL - PHASE 1B.1	0	0	0	0	0	0	0	0	0	0
Phase 1B.2 - Corporation Yard Street											
0	Task 1 Programming										0
0	Task 2 Site Analysis and Conceptual Design										0
0	Task 3 Schematic Design										0
0	Task 4 Design Development										0
0	Task 5 Construction Documents										0
0	Task 6 Project Procurement										0
0	Task 7 Project Construction Administration										0
0	0 0										0
0	0 0										0
0	0 0										0
0	0										0
0	Meetings										0
0	Client Progress Meetings										0
0	Team Meetings										0
0	Agency Meetings										0
0	0										0
	No. of Mtgs										
	SUB-TOTAL - PHASE 1B.2	0	0	0	0	0	0	0	0	0	0
Phase 1b.3 - Streets Maintenance Building											
0	Task 1 Programming										0
0	Task 2 Site Analysis and Conceptual Design										0
0	Task 3 Schematic Design										0
0	Task 4 Design Development										0
0	Task 5 Construction Documents										0
0	Task 6 Project Procurement										0
0	Task 7 Project Construction Administration										0
0	0 0										0
0	0 0										0
0	0 0										0
0	0										0
0	Meetings										0
0	Client Progress Meetings										0
0	Team Meetings										0
0	Agency Meetings										0
0	0										0
	No. of Mtgs										
	SUB-TOTAL - PHASE 1B.3	0	0	0	0	0	0	0	0	0	0
Phase 3.1 - PD Building Tenant Improvements											
0	Task 1 Programming	2									2
0	Task 2 Site Analysis and Conceptual Design	2									2
0	Task 3 Schematic Design	12									12
0	Task 4 Design Development	16									16
0	Task 5 Construction Documents	6									6
0	Task 6 Project Procurement										0
0	Task 7 Project Construction Administration	6									6
0	0 0										0
0	0 0										0
0	0 0										0
0	#REF!										0
0	Meetings										0
0	Client Progress Meetings										0
0	Team Meetings										0
0	Agency Meetings										0
0	0										0
	No. of Mtgs										
	SUB-TOTAL - PHASE 3.1	44	0	0	0	0	0	0	0	0	44
Phase 3.2 - PD Building Addition/Expansion											
0	Task 1 Programming										0
0	Task 2 Site Analysis and Conceptual Design										0
0	0 0										0
0	0 0										0
0	0 0										0
0	0 0										0
0	0 0										0
0	0 0										0
0	0 0										0
0	0 0										0
0	0										0
0	Meetings										0
0	Client Progress Meetings										0
0	Team Meetings										0
0	Agency Meetings										0
0	0										0
	No. of Mtgs										
	SUB-TOTAL - PHASE 3.2	0	0	0	0	0	0	0	0	0	0
~~Phase 3.3 - PD New Two Story Building (Master Plans Phase 3)~~											
0	~~Task 1 Programming~~										0
0	~~Task 2 Site Analysis and Conceptual Design~~										0
0	0 0										0
0	0 0										0
0	0 0										0
0	0 0										0
0	0 0										0
0	0 0										0
0	0 0										0
0	0										0
0	Meetings										0
0	Client Progress Meetings										0
0	Team Meetings										0
0	Agency Meetings										0
0	0										0
	No. of Mtgs										
	SUB-TOTAL - PHASE 3.3	0	0	0	0	0	0	0	0	0	0

Roseville Police Department Expansion

City of Roseville

19six Architects

Assigned Staff per Task

Labor Hour Estimates

Rev 2 7/24/2024

Cost Estimator

		Team Members									
		Managing Director	Sr Cost Estimator	Cost Manager	x	x	x	x	x	x	Total Hours
Phase 1B.1 - Parking Lot Expansion											
0	Task 1 Programming										0
0	Task 2 Site Analysis and Conceptual Design	3	24	16							43
0	Task 3 Schematic Design										0
0	Task 4 Design Development										0
0	Task 5 Construction Documents	3	32	16							51
0	Task 6 Project Procurement										0
0	Task 7 Project Construction Administration										0
0	0 0										0
0	0 0										0
0	0 0										0
0	Meetings										0
0	Project Kickoff Meeting										0
0	Staff Programming Interviews										0
0	Client Progress Meetings										0
0	Team Meetings										0
0	Agency Meetings										0
	SUB-TOTAL - PHASE 1B.1	6	56	32	0	0	0	0	0	0	94
Phase 1B.2 - Corporation Yard Street											
0	Task 1 Programming										0
0	Task 2 Site Analysis and Conceptual Design	2	12	7							21
0	Task 3 Schematic Design										0
0	Task 4 Design Development										0
0	Task 5 Construction Documents	2	18	10							30
0	Task 6 Project Procurement										0
0	Task 7 Project Construction Administration										0
0	0 0										0
0	0 0										0
0	0 0										0
0	0										0
0	Meetings										0
0	Client Progress Meetings										0
0	Team Meetings										0
0	Agency Meetings										0
0	0										0
	SUB-TOTAL - PHASE 1B.2	4	30	17	0	0	0	0	0	0	51
Phase 1b.3 - Streets Maintenance Building											
0	Task 1 Programming										0
0	Task 2 Site Analysis and Conceptual Design	2	12	7							21
0	Task 3 Schematic Design										0
0	Task 4 Design Development										0
0	Task 5 Construction Documents	2	18	10							30
0	Task 6 Project Procurement										0
0	Task 7 Project Construction Administration										0
0	0 0										0
0	0 0										0
0	0 0										0
0	0										0
0	Meetings										0
0	Client Progress Meetings										0
0	Team Meetings										0
0	Agency Meetings										0
0	0										0
	SUB-TOTAL - PHASE 1B.3	4	30	17	0	0	0	0	0	0	51
Phase 3.1 - PD Building Tenant Improvements											
0	Task 1 Programming	1	4	2							7
0	Task 2 Site Analysis and Conceptual Design	5	30	19							54
0	Task 3 Schematic Design	Peer Review									0
0	Task 4 Design Development	Peer Review									0
0	Task 5 Construction Documents	Peer Review									0
0	Task 6 Project Procurement										0
0	Task 7 Project Construction Administration										0
0	0 0										0
0	0 0										0
0	0 0										0
0	#REF!										0
0	Meetings										0
0	Client Progress Meetings										0
0	Team Meetings										0
0	Agency Meetings										0
0	0										0
	SUB-TOTAL - PHASE 3.1	6	34	21	0	0	0	0	0	0	61
Phase 3.2 - PD Building Addition/Expansion											
0	Task 1 Programming	1	4	2							7
0	Task 2 Site Analysis and Conceptual Design	3	18	10							31
0	0 0										0
0	0 0										0
0	0 0										0
0	0 0										0
0	0 0										0
0	0 0										0
0	0 0										0
0	0 0										0
0	0										0
0	Meetings										0
0	Client Progress Meetings										0
0	Team Meetings										0
0	Agency Meetings										0
0	0										0
	SUB-TOTAL - PHASE 3.2	4	22	12	0	0	0	0	0	0	38
~~**Phase 3.3 - PD New Two-Story Building (Master Plans Phase 2)**~~											
0	~~Task 1 Programming~~										0
0	~~Task 2 Site Analysis and Conceptual Design~~										0
0	0 0										0
0	0 0										0
0	0 0										0
0	0 0										0
0	0 0										0
0	0 0										0
0	0 0										0
0	0										0
0	Meetings										0
0	Client Progress Meetings										0
0	Team Meetings										0
0	Agency Meetings										0
0	0										0
	SUB-TOTAL - PHASE 3.3	0	0	0	0	0	0	0	0	0	0

	No. of Mtgs

	No. of Mtgs

	No. of Mtgs

	No. of Mtgs

	No. of Mtgs

	No. of Mtgs

Roseville Police Department Expansion

City of Roseville

19six Architects

Assigned Staff per Task

Labor Hour Estimates

Rev 2 7/24/2024

Surveyor

		Team Members									
		Senior Surveyor	2-Man Crew	x	x	x	x	x	x	x	Total Hours
Phase 1B.1 - Parking Lot Expansion											
0	Task 1 Programming	64	32								96
0	Task 2 Site Analysis and Conceptual Design										0
0	Task 3 Schematic Design										0
0	Task 4 Design Development										0
0	Task 5 Construction Documents										0
0	Task 6 Project Procurement										0
0	Task 7 Project Construction Administration										0
0	0 0										0
0	0 0										0
0	0 0										0
0	Meetings										0
		No. of Mtgs									
0	Internal Project Kickoff Meeting	0									0
0	Staff Programming Interviews	0									0
0	Client Progress Meetings	0									0
0	Team Meetings	0									0
0	Agency Meetings	0									0
	SUB-TOTAL - PHASE 1B.1	64	32	0	0	0	0	0	0	0	96
Phase 1B.2 - Corporation Yard Street											
0	Task 1 Programming	34	24								58
0	Task 2 Site Analysis and Conceptual Design										0
0	Task 3 Schematic Design										0
0	Task 4 Design Development										0
0	Task 5 Construction Documents										0
0	Task 6 Project Procurement										0
0	Task 7 Project Construction Administration										0
0	0 0										0
0	0 0										0
0	0 0										0
0	0										0
0	Meetings										0
		No. of Mtgs									
0	Client Progress Meetings	0									0
0	Team Meetings	0									0
0	Agency Meetings	0									0
0	0	0									0
	SUB-TOTAL - PHASE 1B.2	34	24	0	0	0	0	0	0	0	58
Phase 1b.3 - Streets Maintenance Building											
0	Task 1 Programming	28	24								52
0	Task 2 Site Analysis and Conceptual Design										0
0	Task 3 Schematic Design										0
0	Task 4 Design Development										0
0	Task 5 Construction Documents										0
0	Task 6 Project Procurement										0
0	Task 7 Project Construction Administration										0
0	0 0										0
0	0 0										0
0	0 0										0
0	0										0
0	Meetings										0
		No. of Mtgs									
0	Client Progress Meetings	0									0
0	Team Meetings	0									0
0	Agency Meetings	0									0
0	0	0									0
	SUB-TOTAL - PHASE 1B.3	28	24	0	0	0	0	0	0	0	52
Phase 3.1 - PD Building Tenant Improvements											
0	Task 1 Programming										0
0	Task 2 Site Analysis and Conceptual Design										0
0	Task 3 Schematic Design										0
0	Task 4 Design Development										0
0	Task 5 Construction Documents										0
0	Task 6 Project Procurement										0
0	Task 7 Project Construction Administration										0
0	0 0										0
0	0 0										0
0	0 0										0
0	#REF!										0
0	Meetings										0
		No. of Mtgs									
0	Client Progress Meetings	0									0
0	Team Meetings	0									0
0	Agency Meetings	0									0
0	0	0									0
	SUB-TOTAL - PHASE 3.1	0	0	0	0	0	0	0	0	0	0
Phase 3.2 - PD Building Addition/Expansion											
0	Task 1 Programming										0
0	Task 2 Site Analysis and Conceptual Design										0
0	0 0										0
0	0 0										0
0	0 0										0
0	0 0										0
0	0 0										0
0	0 0										0
0	0 0										0
0	0 0										0
0	0										0
0	Meetings										0
		No. of Mtgs									
0	Client Progress Meetings	0									0
0	Team Meetings	0									0
0	Agency Meetings	0									0
0	0	0									0
	SUB-TOTAL - PHASE 3.2	0	0	0	0	0	0	0	0	0	0
~~**Phase 3.3 - PD New Two Story Building (Master Plans Phase 3)**~~											
0	~~Task 1 Programming~~										0
0	~~Task 2 Site Analysis and Conceptual Design~~										0
0	0 0										0
0	0 0										0
0	0 0										0
0	0 0										0
0	0 0										0
0	0 0										0
0	0 0										0
0	0 0										0
0	0										0
0	Meetings										0
		No. of Mtgs									
0	Client Progress Meetings	0									0
0	Team Meetings	0									0
0	Agency Meetings	0									0
0	0	0									0
	SUB-TOTAL - PHASE 3.3	0	0	0	0	0	0	0	0	0	0

Roseville Police Department Expansion

City of Roseville

19six Architects

Assigned Staff per Task

Labor Hour Estimates

Rev 2 7/24/2024

Arborist

	Team Members									Total Hours
	Arborist	Mapping Tech	x	x	x	x	x	x	x	
Phase 1B.1 - Parking Lot Expansion										
0 Task 1 Programming	12	2								14
0 Task 2 Site Analysis and Conceptual Design										0
0 Task 3 Schematic Design										0
0 Task 4 Design Development										0
0 Task 5 Construction Documents										0
0 Task 6 Project Procurement										0
0 Task 7 Project Construction Administration										0
0 0 0										0
0 0 0										0
0 0 0										0
0 Meetings										0
0 Project Kickoff Meeting										0
0 Staff Programming Interviews										0
0 Client Progress Meetings										0
0 Team Meetings										0
0 Agency Meetings										0
SUB-TOTAL - PHASE 1B.1	12	2	0	0	0	0	0	0	0	14
Phase 1B.2 - Corporation Yard Street										
0 Task 1 Programming	12	2								14
0 Task 2 Site Analysis and Conceptual Design										0
0 Task 3 Schematic Design										0
0 Task 4 Design Development										0
0 Task 5 Construction Documents										0
0 Task 6 Project Procurement										0
0 Task 7 Project Construction Administration										0
0 0 0										0
0 0 0										0
0 0 0										0
0 0										0
0 Meetings										0
0 Client Progress Meetings										0
0 Team Meetings										0
0 Agency Meetings										0
0 0										0
SUB-TOTAL - PHASE 1B.2	12	2	0	0	0	0	0	0	0	14
Phase 1b.3 - Streets Maintenance Building										
0 Task 1 Programming										0
0 Task 2 Site Analysis and Conceptual Design										0
0 Task 3 Schematic Design										0
0 Task 4 Design Development										0
0 Task 5 Construction Documents										0
0 Task 6 Project Procurement										0
0 Task 7 Project Construction Administration										0
0 0 0										0
0 0 0										0
0 0 0										0
0 0										0
0 Meetings										0
0 Client Progress Meetings										0
0 Team Meetings										0
0 Agency Meetings										0
0 0										0
SUB-TOTAL - PHASE 1B.3	0	0	0	0	0	0	0	0	0	0
Phase 3.1 - PD Building Tenant Improvements										
0 Task 1 Programming										0
0 Task 2 Site Analysis and Conceptual Design										0
0 Task 3 Schematic Design										0
0 Task 4 Design Development										0
0 Task 5 Construction Documents										0
0 Task 6 Project Procurement										0
0 Task 7 Project Construction Administration										0
0 0 0										0
0 0 0										0
0 0 0										0
0 #REF!										0
0 Meetings										0
0 Client Progress Meetings										0
0 Team Meetings										0
0 Agency Meetings										0
0 0										0
SUB-TOTAL - PHASE 3.1	0	0	0	0	0	0	0	0	0	0
Phase 3.2 - PD Building Addition/Expansion										
0 Task 1 Programming										0
0 Task 2 Site Analysis and Conceptual Design										0
0 0 0										0
0 0 0										0
0 0 0										0
0 0 0										0
0 0 0										0
0 0 0										0
0 0 0										0
0 0										0
0 Meetings										0
0 Client Progress Meetings										0
0 Team Meetings										0
0 Agency Meetings										0
0 0										0
SUB-TOTAL - PHASE 3.2	0	0	0	0	0	0	0	0	0	0
~~**Phase 3.3 - PD New Two Story Building (Master Plans Phase 2)**~~										
0 ~~Task 1 Programming~~										0
0 ~~Task 2 Site Analysis and Conceptual Design~~										0
0 0 0										0
0 0 0										0
0 0 0										0
0 0 0										0
0 0 0										0
0 0 0										0
0 0 0										0
0 0										0
0 Meetings										0
0 Client Progress Meetings										0
0 Team Meetings										0
0 Agency Meetings										0
0 0										0
SUB-TOTAL - PHASE 3.3	0	0	0	0	0	0	0	0	0	0

No. of Mtgs

EXHIBIT "B"

July 25, 2024

Andre Baranov R.A.
Project Supervisor
City of Roseville – Public Works Department Facilities
2005 Hilltop Circle, Suite 150
Roseville, CA 95747

RE: Roseville Police Department Expansion Design
Professional Services Fee Summary
19six File No. 24153

Dear Mr. Baranov:

19six will provide Design Consulting Services as defined in Project Understanding, attached, with compensation to be on a fixed fee basis as follows:

Basic Services

Phase 1B.1 - Parking Lot Expansion	$ 365,500
Phase 1B.2 - Corporation Yard Street	$ 249,500
Phase 1b.3 - Streets Maintenance Building	$ 311,500
Phase 3.1 - PD Building Tenant Improvements	$ 337,900
Phase 3.2 - PD Building Addition/Expansion	$ 69,700

Allowances:
Peer review of Contractors Estimates by 19six's Cost Estimator, when requested and authorized in writing by the City will be provided on a time expended basis with an estimated fee of $17,250.

We sincerely look forward to working with the Police Department, Facilities and other City staff to achieve successful results for all.

Sincerely,

Gregory M Tonello AIA Principal
19six Architects

enclosures: Project Understanding

Notice of Exemption

To: Placer County Clerk
Recorder's Office
2954 Richardson Drive
Auburn, CA 95603

From: City of Roseville
Development Services Dept.
311 Vernon Street
Roseville, CA 95678

Project Title: Roseville Police Department Expansion – Design and Construction

Project Location: Roseville Police Department, 1051 Junction Boulevard (APN 150-350-040-000) and Corporation Yard Road, including portions of the following parcels: APNs 011-010-008-000, 011-020-005-000, and 011-030-001-000, Roseville, CA 95678 and 2000 Hilltop Circle (APN 473-110-001-000), Roseville, CA 95747.

Project Description: The Public Works Department recommending the adoption of a resolution approving a professional design services agreement to prepare and provide construction plans based on an existing sites assessment and Facilities Master Plan for improvements to the Roseville Police Department building located at 1051 Junction Boulevard.

The current project includes:

1. Expansion to the Police Department secured parking area to accommodate 171 new parking spaces, including spaces with electric vehicle charging capabilities, consistent with all applicable codes and regulations at the time of construction; and
2. Purchase, acquisition, and subsequent improvements of Corporation Yard Road, including three parcels (APNs 011-010-008-000, 011-020-005- 000, and 011-030-001-000) currently owned by Placer County; and
3. The demolition of the existing Public Streets Maintenance building currently located at 200 Corporation Yard Road and its relocation to a new 3,000 square-foot maintenance building located at 2000 Hilltop Circle at the City's existing Corporation Yard facility; and
4. Tenant improvements within the existing approximately 84,000-square foot Police Department building and the addition of a total of approximately 6,800 square feet.

The Police Department facility is located on a parcel zoned Light Industrial (M1) and designated Community Commercial (CC) in the General Plan; the proposed parking area and existing Public Works Street Maintenance shop are located on portions of currently non-conforming parcels zoned Single-Family Residential (R1) and designated Public/Quasi-Public (P/QP), and the City's Corporation Yard facility is zoned and designated Public/Quasi-Public (P/QP). The Police Department facility, and therefore its expansion, are permitted in the M1 zone and within the CC designation. The associated parking lot is similarly permitted within the R1 zone and P/QP designation. And lastly, the Corporation Yard's zoning and designation of P/QP allows for the building of a new Public Works Streets Maintenance building.

Any additional expansions to the Police Department building are not being considered at this time and would be subject to additional CEQA review, if ever required. The surrounding environment is heavily urbanized and disturbed on all sides. There are no trees and no wildlife habitat located within or surrounded the project areas.

Public Agency Approving Project: Roseville City Council

Agency/Individual Carrying Out Project: City of Roseville Public Works Department

Reason why this Project is Exempt: This project qualifies for Class 1, Class 3, and Class 32 Exemptions as described in Section 15301, 15303, and 15332, respectively, of the California Environmental Quality Act (CEQA) Guidelines which state:

> "Class 1 consists of…minor alteration of existing public…facilities….involving negligible or no expansion of existing or former use... Examples include but are not limited to: (l) Demolition and removal of individual small structures listed in this subdivision: (3) A store, motel, office, restaurant, or similar small commercial structure if designed for an occupant load of 30 persons or less…"
>
> "Class 3 consists of construction and location of limited numbers of new, small facilities or structures; installation of small new equipment and facilities in small structures… Examples of this exemption include, but are not limited to: (c) A store, motel, office, restaurant or similar structure not involving the use of significant amounts of hazardous substances, and not exceeding 2500 square feet in floor area. In urbanized areas, the exemption also applies to up to four such commercial buildings not exceeding 10,000 square feet in floor area on sites zoned for such use if not involving the use of significant amounts of hazardous substances where all necessary public services and facilities are available and the surrounding area is not environmentally sensitive.
>
> "Class 32 consists of projects characterized as in-fill development meeting the conditions described in this section.
>
> (a) The project is consistent with the applicable general plan designation and all applicable general plan policies as well as with applicable zoning designation and regulations.
> (b) The proposed development occurs within city limits on a project site of no more than five acres substantially surrounded by urban uses.
> (c) The project site has no value as habitat for endangered, rare or threatened species.
> (d) Approval of the project would not result in any significant effects relating to traffic, noise, air quality, or water quality.
> (e) The site can be adequately served by all required utilities and public services."

The Class 1 exemption applies to the demolition of the existing Public Works Streets Maintenance building currently located at 200 Corporation Yard Road. The existing building is approximately 2,700 square feet and houses up to 10 employees and provides dry storage for maintenance materials. The proposed replacement building to be located at 2000 Hilltop Circle would be constructed as an approximately 3,000 square-foot building with the same purpose as the demolished structure and would house the same 10 employees. Because the Hilltop Circle location is located in a highly urbanized area, appropriately zoned for the proposed use, and the surrounding area is not considered to be environmentally sensitive, the Class 3 exemption applies.

The tenant improvements and expansion of the Police Department facility qualify for the Class 32 exemption, as this project meets all the criteria of an infill project pursuant to Section 15332 of the CEQA Guidelines. The project is consistent with the general plan designation and zoning of the site, as well as all applicable general plan policies. The project site is less than 5 acres in size, located within a substantially urbanized area of the city, and it can be adequately served by existing utilities and public services. within the incorporated city limits. No environmentally sensitive resources are located within the project sites. Based on this information, the Class 1, Class 3, and Class 32 exemptions apply to the proposed project.

Lead Agency Contact Person: Andre Baranov, Public Works Department-Facility Services, 2005 Hilltop Circle, Roseville, CA 95747. (916) 774-5342.

Signature: 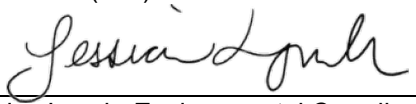 Date: 8/2/2024

Jessica Lynch, Environmental Coordinator
City of Roseville

COUNCIL COMMUNICATION

CC #: 3499
File #: 0203-09

Title:	Water, Wastewater, and Recycled Water Cost-of-Service / Rate Study – Professional Services Agreement
Contact:	Joseph Barrow 916-746-1732 jlbarrow@roseville.ca.us

Meeting Date: 8/21/2024
Item #: 7.12.

RECOMMENDATION TO COUNCIL

Staff recommends that the City Council approve a professional services agreement with Raftelis Financial Consultants, Inc. (Raftelis) for a utility rate study for water, wastewater, and recycled water in the amount of $91,560 and adopt a resolution to authorize the City Manager to execute it.

BACKGROUND

The Environmental Utilities Department (EU) is coordinating the development of a water, wastewater, and recycled water utility rate study for fiscal years (FY) 2025-26 and 2026-27. The scope of the cost-of-service rate study includes a 10-year financial forecast, comprehensive financial planning and rate models, review and potential update of existing EU fiscal policies, and documentation of the analyses.

EU published a Request for Proposals (RFP #08-136) on April 2, 2024, for a Water, Wastewater, and Recycled Water Utility Cost-of-Service Study. On May 13, 2024, the City Clerk's office received proposals from (4) firms for review and consideration. Based on evaluation criteria established in the RFP, staff determined the highest-ranking firm to be Raftelis.

FISCAL IMPACT

This professional services agreement has a not-to-exceed amount of $91,560. Funding is included in the FY2024-25 budgets in the Water and Wastewater Operations Funds.

ENVIRONMENTAL REVIEW

The California Environmental Quality Act (CEQA) only applies to projects which have the potential to cause a significant effect on the environment. Where it can be seen with certainty that there is no possibility that the activity in question may have a significant effect on the environment, the activity is not subject to CEQA. (CEQA Guidelines §15061(b)(3)).

CITY COUNCIL STRATEGIC PLAN/OVERARCHING GOALS

Goal A - Remain fiscally responsible in a changing world
Goal F - Invest in well-planned infrastructure and growth

Respectfully Submitted,

Joseph Barrow, Enivronmental Utilities Business Analyst

Richard Plecker, Environmental Utilities Director

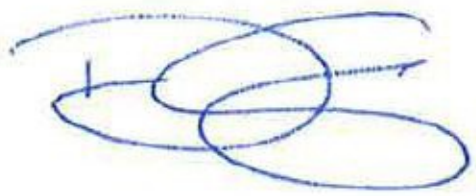

Dominick Casey, City Manager

ATTACHMENTS:

Description

Resolution 24-297

Professional Services Agreement

RESOLUTION NO. 24-297

APPROVING A PROFESSIONAL SERVICES AGREEMENT, BY AND BETWEEN THE CITY OF ROSEVILLE AND RAFTELIS FINANCIAL CONSULTANTS, INC., AND AUTHORIZING THE CITY MANAGER TO EXECUTE IT ON BEHALF OF THE CITY OF ROSEVILLE

WHEREAS, a professional services agreement for a water, wastewater and recycled water utility cost-of-service study, by and between the City of Roseville and Raftelis Financial Consultants, Inc., has been reviewed by the City Council; and

NOW, THEREFORE, BE IT RESOLVED by the Council of the City of Roseville that said professional services agreement is hereby approved and that the City Manager is authorized to execute it on behalf of the City of Roseville.

PASSED AND ADOPTED by the Council of the City of Roseville this____day of _____, 2024, by the following vote on roll call:

AYES COUNCILMEMBERS:

NOES COUNCILMEMBERS:

ABSENT COUNCILMEMBERS:

_____
MAYOR

ATTEST:

_____
City Clerk

PROFESSIONAL SERVICES AGREEMENT

Waste, Wastewater and Recycled Water Utility Cost-of-Service Study

THIS AGREEMENT is made and entered into this ___ day of _____, 20__, by and between the City of Roseville, a municipal corporation ("CITY"), and Raftelis Financial Consultants, Inc., a North Carolina corporation ("CONSULTANT"); and

W I T N E S S E T H:

WHEREAS, CITY issued Request for Proposal # 08-136 for professional services consisting of preparing a Water, Wastewater and Recycled Water Utility Cost-of-Service Study; and

WHEREAS, CONSULTANT has prepared a response to the Request for Proposal dated June 19, 2024, which describes the scope of services to be performed by CONSULTANT, and the hourly rates for performance of such services; and

WHEREAS, CONSULTANT is qualified and experienced to provide such professional services.

NOW, THEREFORE, the parties agree as follows:

1. Services. CONSULTANT shall perform, at the direction of CITY, the scope of services as described in EXHIBIT "A," attached hereto and incorporated herein by this reference.

2. Compensation. For its services provided hereunder, CONSULTANT shall be compensated on a time and expense basis in accordance with the budget estimate as described in

EXHIBIT "B," attached hereto and incorporated herein by this reference. Total compensation shall not exceed ninety-one thousand five hundred sixty dollars ($91,560).

CONSULTANT shall submit one monthly invoice for its services. Such invoices shall be delineated by task, the person performing the services, and the hourly rate, which shall be stated in time increments of not greater than one tenth (1/10) hours. CITY shall pay invoices within thirty (30) days after receipt, if the services specified in the invoice have been satisfactorily completed.

3. Indemnification. CONSULTANT shall defend, indemnify, and save and hold harmless CITY, its officers employees and volunteers from any claims, suits or actions of every name, kind and description brought forth, or on account of, injuries to or death of any person (including but not limited to workers and the public), or damage to property, resulting from or arising out of CONSULTANT's willful misconduct or negligent act or omission while engaged in the performance of obligations or exercise of rights created by this Agreement, except those matters arising from CITY's sole negligence or willful misconduct. The parties intend that this provision shall be broadly construed.

CONSULTANT agrees to defend and indemnify CITY if, despite the parties intent and practice, any venue, agency, or court with competent jurisdiction determines that CONSULTANT and/or any of its agents, officers, employees, volunteers, independent contractors, or subcontractors, are characterized as employee(s) of CITY.

CONSULTANT's responsibility for such defense and indemnity obligations shall survive the termination or completion of this Agreement for the applicable statute of limitations. The defense and indemnity obligations of this Agreement are undertaken in addition to, and shall not in any way be limited by, the insurance obligations contained in this Agreement.

CONSULTANT shall have no obligation to indemnify CITY or any other indemnified party hereunder against liability for claims by a third party of CITY's sole failure to comply with its obligations under Article XIII D of the California Constitution (Proposition 218).

4. Insurance. CONSULTANT agrees to continuously maintain, in full force and effect, the following minimum policies of insurance during the term of this Agreement.

COVERAGE	LIMITS OF LIABILITY
Workers' Compensation	Statutory
Commercial General Liability	$1,000,000 each occurrence $2,000,000 aggregate Personal Injury: $1,000,000 each occurrence $2,000,000 aggregate
Automobile Liability	$1,000,000 combined single limit
Professional Liability (errors and omissions)	$1,000,000 per claim $2,000,000 aggregate

a. Form. CONSULTANT shall submit a certificate evidencing such coverage for the period covered by this Agreement in a form satisfactory to Risk Management and the City Attorney, prior to undertaking any work hereunder. Any insurance written on a claims made basis is subject to the approval of Risk Management and the City Attorney.

b. Additional Insureds. CONSULTANT shall also provide a separate endorsement form or section of the policy showing CITY, its officers, agents, employees and volunteers as additional insureds for each type of coverage, except for Workers' Compensation and Professional Liability. Such insurance shall specifically cover the contractual liability of CONSULTANT. The additional insured coverage under the CONSULTANT's policy shall be primary and noncontributory, as evidenced by a separate endorsement or section of the policy,

and shall not seek contribution from CITY's insurance or self-insurance. In addition, the additional insured coverage shall be at least as broad as the Insurance Services Office ("ISO") CG 20 01 Endorsement. Any available insurance proceeds in excess of the specified minimum insurance coverage requirements and limits shall be available to the additional insureds. Furthermore, the requirements for coverage and limits shall be: (1) the minimum coverage and limits specified in this Agreement; or (2) the full coverage and maximum limits of any insurance proceeds available to the named insureds, whichever is greater.

c. Cancellation/Modification. CONSULTANT shall provide ten (10) days written notice to CITY prior to cancellation or modification of any insurance required by this Agreement.

d. Umbrella/Excess Insurance. The limits of insurance required in this Agreement may be satisfied by a combination of primary and excess insurance. Any excess insurance shall contain or be endorsed to contain a provision that such coverage shall also apply on a primary and noncontributory basis for the benefit of CITY (if agreed to in a written contract) before CITY's own insurance shall be called upon to protect it as a named insured.

e. Subcontractors. CONSULTANT agrees to include in its contracts with all subcontractors the same requirements and provisions of this Agreement, including the indemnity and insurance requirements, to the extent they apply to the scope of the subcontractor's work. Furthermore, CONSULTANT shall require its subcontractors to agree to be bound to CONSULTANT and CITY in the same manner and to the same extent as CONSULTANT is bound to CITY under this Agreement. Additionally, CONSULTANT shall obligate its subcontractors to comply with these same provisions with respect to any tertiary subcontractor,

regardless of tier. A copy of CITY's indemnity and insurance provisions will be furnished to the subcontractor or tertiary subcontractor upon request.

f. Self-Insured Retentions. All self-insured retentions ("SIR") must be disclosed to Risk Management for approval and shall not reduce the limits of liability. Policies containing any SIR provision shall provide or be endorsed to provide that the SIR may be satisfied by either the named insured or CITY. CITY reserves the right to obtain a full certified copy of any insurance policy and endorsements. The failure to exercise this right shall not constitute a waiver of such right.

g. Waiver of Subrogation. CONSULTANT hereby agrees to waive subrogation which any insurer of CONSULTANT may acquire from CONSULTANT by virtue of the payment of any loss under a Workers Compensation, Commercial General Liability or Automobile Liability policy. All Workers Compensation, Commercial General Liability and Automobile Liability policies shall be endorsed with a waiver of subrogation in favor of CITY, its officers, agents, employees and volunteers for all worked performed by CONSULTANT, its employees, agents and subcontractors.

h. Liability/Remedies. Insurance coverage in the minimum amounts set forth herein shall not be construed to relieve CONSULTANT of liability in excess of such coverage, nor shall it preclude CITY from taking such other actions as are available to it under any other provisions of this Agreement or law.

5. Records. CONSULTANT and its subcontractors shall maintain all files and records relating to the services performed hereunder during the term of this Agreement and for a period of not less than one (1) year after the date of termination or expiration. Provided, however, that in the event of litigation or settlement of claims arising from the performance of

this Agreement, CONSULTANT and its subcontractors shall maintain all files and records until such litigation, appeals or claims are resolved. Duly authorized representatives of CITY shall have right of access during normal business hours and after reasonable notice to CONSULTANT's and subcontractors' files and records relating to the services performed hereunder and may review and copy the files and records at appropriate stages during performance of the services and during the one (1) year period following termination or expiration of this Agreement. CONSULTANT shall include this provision in its contracts with all subcontractors.

6. Time is of the Essence. Time is of the essence of this Agreement.

7. Prevailing Wages. When applicable, for purposes of this Agreement, CONSULTANT and its subcontractors shall comply with all applicable prevailing wage laws, e.g., but not limited to, California Labor Code Sections 1770 et seq. In accordance with said Section 1775, CONSULTANT shall forfeit as a penalty to the City two hundred dollars ($200) for each calendar day or portion thereof for each worker paid less than the prevailing rates for such work or craft in which such worker is employed for any work done on-site under the Agreement by CONSULTANT or by any subcontractor in violation of the provisions of the Labor Code and in particular, Labor Code Sections 1770 to 1780, inclusive. In addition to said penalty and pursuant to said Section 1775, the difference between such stipulated prevailing wage rates and the amount paid to each worker for each calendar day or portion thereof for which each worker was paid less than the stipulated prevailing wage shall be paid to each worker by CONSULTANT or the applicable subcontractor.

Pursuant to the provisions of California Labor Code Section 1773, the contracting department has identified the source, stated below, of the general prevailing rate of wages

applicable to the site to be done, for straight time, overtime, and holiday work. The holiday wage rate listed shall be applicable to all holidays recognized in the collective bargaining agreement of the particular craft, classification or type of worker concerned. These wage rates may be obtained from the State Department of Industrial Relations and/or the following website address: http://www.dir.ca.gov/dlsr/DPreWageDetermination.htm.

Pursuant to Labor Code Section 1773.2, general prevailing wage rates set forth above, which forms a part of this Agreement, shall be posted by CONSULTANT at a prominent place at the work site. Prevailing wage rates to be posted at the work site will be furnished by the contracting department. The possibility of wage increases is one of the elements to be considered by CONSULTANT in determining its proposal and will not under any circumstances be considered as the basis of a claim against CITY or the Agreement.

8. Compliance with Laws. CONSULTANT shall comply with all federal, state and local laws, ordinances and policies as may be applicable to the performance of services under this Agreement.

9. Ability to Perform. CONSULTANT agrees and represents that it has the time, ability and professional expertise to perform the services required under this Agreement.

10. Public Contracts: Conflicts of Interest. CONSULTANT's duties and services under this Agreement shall not include preparing or assisting CITY with any portion of the CITY's preparation of a request for proposals, request for qualifications, or any other solicitation regarding a subsequent or additional contract with CITY. CITY shall at all times retain responsibility for public contracting, including with respect to any subsequent phase of this project. CONSULTANT's participation in the planning, discussions, or drawing of project plans or specifications shall be limited to conceptual, preliminary, or initial plans or specifications.

CONSULTANT shall cooperate with CITY to ensure that all bidders for a subsequent contract on any subsequent phase of this project have access to the same information, including all conceptual, preliminary, or initial plans or specifications prepared by CONSULTANT pursuant to this Agreement.

11. Governing Agreement. In the event of any conflict between this Agreement and its EXHIBITS, the provisions of this Agreement shall govern. In the event of any conflict between any of the EXHIBITS, the provisions of the first in order of attachment shall govern.

12. The Levine Act Disclosure. The Levine Act (Govt. Code, Section 84308) requires a Party (and its agent(s), if any) to a Proceeding before the City of Roseville that involves any action or consideration related to their contract, license, permit, or other entitlement for use, to disclose any campaign contributions made to CITY elected or appointed officers totaling more than $250 within the twelve (12) months prior to the CITY decision and while a proceeding is pending, and includes certain prohibitions on contribution activity thereafter. If applicable campaign contributions have been made by CONSULTANT and/or its agent(s), CONSULTANT is responsible for compliance, including for its disclosure obligations, if any, as further described at:

https://www.roseville.ca.us/government/departments/city_clerk/transparency/levine_act.

13. Assignment. CONSULTANT is employed to perform unique personal services. CONSULTANT shall not assign this Agreement without the prior written consent of CITY. CONSULTANT shall not employ or otherwise incur any obligation to pay other specialists or experts for services in connection with this Agreement, without prior written consent of CITY.

14. Independent Contractor. CONSULTANT, inclusive of its agents, officers, employees, volunteers, independent contractors, and subcontractors, shall act as an independent

contractor, and covenants and agrees that it will conduct itself consistent with such status, that it will neither hold itself out as, nor claim to be, an officer or employee of CITY by reason of this Agreement.

CONSULTANT and CITY agree that: (a) CONSULTANT is free from the control and direction of CITY in connection with the performance of the work; (b) CONSULTANT is providing services directly to CITY; (c) CONSULTANT has and will maintain at all relevant times a business license; (d) CONSULTANT maintains a business location that is separate from CITY; (e) CONSULTANT is customarily engaged in an independently established business of the same nature as that involved in the work performed hereunder; (f) CONSULTANT actually contracts with other businesses to provide the same or similar services and maintains a clientele without restrictions from CITY; (g) CONSULTANT advertises and holds itself out to the public as available to provide the same or similar services; (h) CONSULTANT provides its own tools, vehicles, and equipment to perform the services; (i) CONSULTANT has negotiated its own rates; (j) CONSULTANT set its own hours and location of work in accomplishing CITY's on-call needs; and (k) CONSULTANT has the right to control the manner and means of accomplishing the result desired and exercises its own expert independent judgement.

15. Representations and Warranties. CONSULTANT warrants that it has not employed or retained any company or person, other than a bona fide employee working for CONSULTANT, to solicit or secure this Agreement, and that it has not paid or agreed to pay any company or person, other than a bona fide employee, any fee, commission, percentage, brokerage fee, gift or any other consideration, contingent upon or resulting from the award or making of this Agreement. For breach or violation of this warranty, CITY shall have the right to terminate as void this Agreement, without liability, or, in its discretion, to deduct from the

Agreement price or consideration, or otherwise recover, the full amount of such fee, commission, percentage, brokerage fee, gift or contingent fee.

16. Successors in Interest. This Agreement shall be binding upon the heirs, successors, executors, administrators and assigns of the respective parties hereto.

17. Copyright, Ownership and Use of Materials. All tangible material ("Material") created and delivered by CONSULTANT to CITY pursuant to this Agreement shall be the property of the CITY. Material constitutes deliverables identified in the scope of work outlined in Exhibit A and attached hereto. All Material furnished by CONSULTANT is, and shall remain, the property of CITY.

Nothing in this Agreement shall be deemed or construed as a waiver, release, transfer, assignment or divestiture by CONSULTANT of any of its intellectual property, know-how or trade secrets.

18. Termination of Agreement. The City may terminate this Agreement without cause by giving CONSULTANT ten (10) days advance written notice from the City Manager. CONSULTANT may terminate this Agreement without cause by giving CITY thirty (30) days advance written notice. In the event of termination through no fault of CONSULTANT, CITY shall compensate CONSULTANT for services performed as of the date of termination, upon the release to CITY of all Material hereunder, in any and all media or formats in which such materials have been created or are maintained. CITY retains the right to receive and use any Material, notwithstanding any termination or any dispute regarding the amount to be paid.

19. Attorney's Fees; Venue; Governing Law. If either party commences any legal action against the other party arising out of this Agreement or the performance hereof, the prevailing party in such action shall be entitled to recover its reasonable litigation expenses,

including but not limited to, court costs, expert witness fees, discovery expenses, and attorney's fees. Any action arising out of this Agreement shall be brought in Placer County, California, regardless of where else venue may lie. This Agreement shall be governed by and construed in accordance with the laws of the State of California.

20. Modification. This Agreement and each provision contained herein may be waived, amended, supplemented or eliminated only by mutual written agreement of the parties.

21. Severability. If any of the provisions contained in this Agreement are for any reason held invalid or unenforceable, such holding shall not affect the remaining provisions or the validity and enforceability of the Agreement as a whole.

22. Notices. Any notices to parties required by this Agreement shall be delivered personally or mailed, U.S. first class postage prepaid, addressed as follows:

CITY OF ROSEVILLE	CONSULTANT
Joseph Barrow Environmental Utilities Business Analyst 1800 Booth Road Roseville, CA 95747	John Wright, CPA Project Manager 24640 Jefferson Avenue, Suite 207 Murrieta, CA 92562

Either party may amend its address for notice by giving notice to the other party in writing.

23. Integrated Agreement. This is an integrated agreement and contains all of the terms, considerations, understanding and promises of the parties. It shall be read as a whole.

IN WITNESS WHEREOF, the City of Roseville, a municipal corporation, has authorized the execution of this Agreement in duplicate by its City Manager and attested to by its City Clerk under the authority of Resolution No. _____, adopted by the Council of the City of Roseville on the ___ day of _____, 20__, and CONSULTANT has caused this Agreement to be executed.

(SIGNATURES ON NEXT PAGE)

CITY OF ROSEVILLE, a municipal corporation

BY: _____
DOMINICK CASEY
City Manager

ATTEST:

BY: _____
CARMEN AVALOS
City Clerk

APPROVED AS TO FORM:

BY: _____
MICHELLE SHEIDENBERGER
City Attorney

APPROVED AS TO SUBSTANCE:

BY: _____ Devin Whittington on behalf of Richard Plecker
RICHARD PLECKER
Environmental Utilities Director

RAFTELIS FINANCIAL CONSULTANTS, INC., a North Carolina corporation

BY: _____
its: Executive Vice President

and

BY: _____
its: Chief Financial Officer

EXHIBIT “A”

RAFTELIS

TAB E: PROJECT PLAN

Tab E: Project Plan – Revised

Project Plan

Our proposed project plan is based on our extensive experience completing water, wastewater, and recycled water rate studies for utilities in California and across the United States. The plan has been tailored to reflect the specific objectives provided in the City's RFP.

Task 1: Project Initiation, Management, and Kick Off

1.1 Initial Data Request and Data Review

Immediately upon receiving the notice to proceed, Raftelis will submit a comprehensive data request to the City seeking information such as that listed below. To the extent possible, we will review the information provided prior to the project kickoff meeting.

- Customer billing data (Microsoft Excel)
- Current and proposed revenue and expenditure budgets (Microsoft Excel)
- CIP projections based on the water and sewer master plans and the City's long-term CIP plans (Microsoft Excel)
- Water and wastewater treatment plant production data (Microsoft Excel)
- 2020 Urban Water Management Plan (PDF)

1.2 Project Kick-off Meeting

A single kickoff meeting will be held for the water, wastewater, and recycled water utility cost-of-service studies. Our proposed consulting fee assumes that the kickoff meeting will be held onsite in Roseville. Topics of discussion will include:

- Information on the operations of each utility including:
  - Customer demographics, consumption characteristics, and land-use patterns
  - Projected capital expenditures for the water and sewer utility systems as developed in the master planning process
  - Rate structure concerns and pricing objectives
  - Utility financial policies
  - Legal/regulatory issues
  - Key City Council and external stakeholder concerns/perspectives
- Confirmation of project objectives, deliverables, and schedule
- City and Raftelis points of contact and communications protocols

1.3 Project Management

- Timely identification of project issues/challenges as they arise during the project
- On-going model QA/QC by the Project Director and Technical Advisor
- Monthly invoicing and tracking of actual consulting hours and costs to budgeted consulting hours and costs
- Scheduled virtual bi-weekly check-in meetings

DELIVERABLES:

- Pre-kick-off meeting data request
- Onsite kick-off meeting
- Kick-off meeting agenda and meeting minutes
- Project schedule with key milestones within two weeks after the kick-off meeting

- Monthly invoicing and tracking actual to budget consulting hours and costs
- Virtual bi-weekly project check-in meetings

Task 2: Analysis of Customer Demand Characteristics and Demand Forecasting

2.1 Analysis of Customer Water, Wastewater, and Recycled Water Demand

The analysis of customer billed water consumption and estimated wastewater discharges is critical to developing the demand forecast that underlies the financial planning, cost-of-service analysis, and rate structure design. After obtaining the City's actual historical customer billing data for the period FY 2021-2023, Raftelis will seek to analyze the following types of information for each major customer type/land use:

- Account growth by land use type and meter size
- Monthly, seasonal, and annual consumption by land use type and meter size
- The relationship between billed water consumption and wastewater treatment plant influent volumes
- Average day, maximum day, and maximum hour consumption
- Winter average consumption as a proxy for indoor consumption
- Estimates of indoor and outdoor consumption on a per account and gallons per capita day (GPCD) basis
- Historical consumption declines during drought stage emergencies

2.2 Demand Forecasting

Raftelis will prepare comprehensive demand forecasts for the water, recycled water, and wastewater utilities for the 10-year period FY 2025-2026 through FY 2034-FY 3035. It will be developed using Microsoft Excel to allow for scenario modeling.

DELIVERABLES:

- Detailed understanding of customer billed water consumption and estimated wastewater discharges
- Forecast of billed water and recycled water consumption for the 10-year period FY 2025-2026 through FY 2034-2035
- Estimate of wastewater discharges for the 10-year period FY 2025-2026 through FY 2034-2035

Task 3: Financial Planning and Revenue Requirement Forecasting

Separate financial plans will be developed for the City's water, wastewater, and recycled water utilities. They will be developed in Microsoft Excel and feature variable input assumptions to allow for scenario planning by City Staff.

3.1 Raftelis Approach to the Financial Planning Process

Utility financial planning is an iterative process in which the "optimal" capital financing strategy must be identified. This requires achieving the correct balance between CIP financing provided by rate revenues, capacity fees, grants, and external debt financing. A comprehensive and correctly developed financial plan must be based on a realistic projection of customer water and wastewater demands under normalized climate conditions and reasonable assumptions of customer account growth. The Microsoft Excel financial planning models developed by Raftelis will allow City staff to vary inputs for items such as customer account growth, average billed water consumption per account, average contributed wastewater discharges per account, CIP expenditures and financing strategies, operating expenses, inflation rates, etc.

Figure 1 illustrates the financial planning process that will be used by Raftelis for each of the City's utility services.

Figure 1: Financial Planning Process

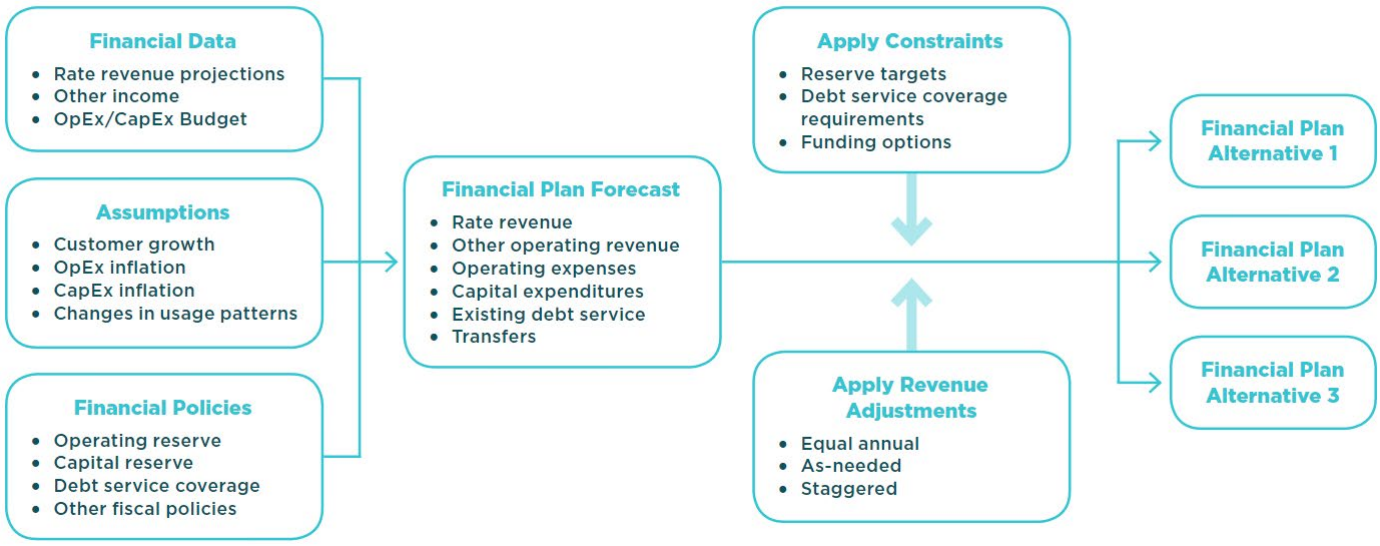

3.2 Review and Evaluation of Environmental Utilities Financial Policies

Raftelis will review, and as appropriate, make recommendations regarding the Environmental Utilities' financial policies. These policies will include items such as your minimum and maximum cash reserve targets, the use of external debt financing for repair and replacement versus growth-related CIP projects, and the appropriate target debt service coverage ratios for senior and subordinated debt.

3.3 Comprehensive Cash Flow Projection and Revenue Requirement Forecasting

10-year financial plans for the period FY 2025-2026 through FY 2034-2025 will be developed. The 10-year financial plans will allow the City to assess its financial position in years 6-10 of the planning horizon when long-term changes may take place in customer demand characteristics, water supply costs, regulatory requirements, etc. The financial planning models will include:

- ***Revenue Under Existing Rates***: A projection of rate revenues generated under existing rates based on the updated demand forecast completed in Task 2. The projection will include billed water and recycled water consumption, and estimated wastewater discharges

- ***Operations and Maintenance Expenses (O&M):*** O&M expenses including inflation adjustments and potential changes in the profile of out-year O&M caused by system technological changes

- ***Potential Pass-Through Costs***: The identification of on-going costs that are not under City control and thus potentially appropriate for recovery via a "pass through" adjustment (e.g., water supply costs and electric power)

- ***Debt Service***: Existing and projected debt service expenditures used for CIP funding, pension obligation funding, etc.

- ***CIP Expenditures***: All CIP expenditures, regardless of funding source, developed as part of the water and sewer master planning process and the City's long-term CIP plan

3.4 Scenario Analysis - Financial Plan Optimization

Optimal Financing Strategy Development: The objective of the financial planning process is to develop an optimal financing strategy that provides for utility revenue sufficiency and stability while, to the maximum extent possible, resulting in small, smooth, and predictable annual rate increases. Development of the optimate financing strategy requires scenario analysis that models required rate increase under different utility sales for each service, CIP expenditure, and debt service alternatives. It includes the modeling of projected cash reserve and debt service coverage for each year of the planning horizon. As instructed in the City's RFP, a minimum of three financial planning scenarios will be developed:

- ***"Do Nothing" Scenario***: Comprehensive financial plans that assume no rate increases over the 10-year financial planning horizon
- ***"More of the Same" Scenario***: Comprehensive financial plans that assume annual rate revenue increases if the City was to replicate its previously approved historical rate increases over the 10-year planning horizon
- ***Optimal Capital Financing Scenario***: Development of an "optimal" capital financing strategy that balances the projected mix of rate revenues, capacity fees, grants, and external debt funding to fund capital improvements.
- ***Drought Risk Assessment***: Assessment of the risk of water sales revenue shortfalls due to short- and long-term drought events.

3.5 Revenue Requirement and 10-Year Rate Projection

- Based on the optimal financial planning scenarios developed in Task 3.4, Raftelis will project, for the water, wastewater, and recycled water utilities, a total system revenue requirement from rates for the 10-year period FY 2025-2026 through FY 2034-2025. A 10-year forecast of rates will also be developed.

DELIVERABLES:

- Development of the optimal water, wastewater, and recycled water financial planning scenarios in consultation with City staff
- Water, wastewater, and recycled water financial plans for the 10-year period FY 2025-2026 and FY 2034-2035
- Potential recommendations for changes in financial policies

Task 4: Cost-of-service Analysis

Separate cost-of-service studies will be developed for the City's water, wastewater, and recycled water utilities.

4.1 Raftelis Approach to the Cost-of-service Process

The procedures used by Raftelis in water, wastewater, and recycled water cost-of-service studies are based on industry standard methods presented in AWWA's *Manual of Water Supply Practices M1, Principles of Water, Rates, Fees, and Charges* and WEF's *Manual of Practice No. 27, Financing and Charges for Wastewater Systems*. The use of industry-standard procedures corresponds to the cost-of-service mandate contained in California Proposition 218. Figure 2 illustrates the multi-step cost allocation process used by Raftelis for a water cost-of-service study.

Figure 2: Water Cost-of-service Process

Step 1 Revenue Requirement from Financial Plan	Step 2 *Functionalize* Costs	Step 3 *Allocate* Functions to Demand Characteristics	Step 4 *Distribute* Costs to Customer Classes
Operation and Maintenance Expense	Source of Supply	Base	Residential
Debt service	Treatment	Max Day	Multifamily
Capital Costs	Storage & Distribution	Max Hour	Commercial / Industrial
Transfers	Meters and Billing	Metering	Irrigation
		Fire Protection	

Figure 3 illustrates the multi-step cost allocation process used by Raftelis for a wastewater cost-of-service study.

Figure 3: Wastewater Cost-of-service Process

Step 1 Revenue Requirement from Financial Plan	Step 2 *Functionalize* Costs	Step 3 *Allocate* Functions to Demand Characteristics	Step 4 *Distribute* Costs to Customer Classes
Operation and Maintenance Expense	Collection/Conveyance	Flow	Residential
Debt service	Lift Stations/Pumping	Biochemical Oxygen Demand	Multifamily
Capital Costs	Treatment	Suspended Solids	Commercial
Transfers	Biosolid Handling	Customer Service	Industrial

4.2 Water and Wastewater Cost-of-service Analyses

- ***Test-Year Revenue Requirement***: Determination of the test year revenue requirement based on the Task 3 financial planning process

- ***Cost Functionalization***: Determination of the net book value or replacement cost of existing utility infrastructure to the correct functional categories to allocate annual capital costs. Assignment of test-year capital costs (PAYGO financing and projected debt service), O&M expenses, and non-rate revenue offsets to the correct functional categories

- ***Allocation to Cost Causation Components***: Allocation of test-year capital costs, O&M expenses, and non-rate revenue offsets to the correct cost causation components. For a water utility, common cost causation components are water supply, base demand, maximum day demand, maximum hour demand, billing, and customer service. Common wastewater utility cost causation components include flow, biochemical oxygen demand, and suspended solids

- ***Customer Class Units of Service***: Determination of the customer class units of service. For a water utility, units of service often include customer class average day demands, peak demands, number of bills, and number of

3/4" or 1" meter equivalents. For a wastewater utility, units of service include volume of flows and pounds of biochemical oxygen demand and pounds of suspended solids

- ***Customer Class Cost of Service***: Distribution of the allocated test-year capital costs, O&M expenses, and non-rate revenue offsets to customer classes based on each of their proportionate share of demands, bills, and equivalent meters.

DELIVERABLES:

- Water customer class cost-of-service and the identification of fixed and variable costs
- Wastewater customer class cost-of-service and the identification of fixed and variable costs

4.3 Recycled Water Cost-of-service Analyses

As currently understood by Raftelis, recycled water utility costs are recorded in the Wastewater Enterprise Fund. As part of the recycled water study, we will analyze both wastewater ***and*** water utility costs to identify those items that were appropriately attributable to the provision of recycled water service.

DELIVERABLES:

- Recycled water cost-of-service

Task 5: Rate Structure Design and Proposed Rates

5.1 Current Water and Sewer Rates

The City's current water and recycled water rates are presented below.

Commodity Rates for Metered Water Service	
Potable water usage (per cubic foot)	$0.02
Recycled water usage (per cubic foot)	$0.01

Monthly Service Charge by Meter Size	
Up to 3/4"	$30.82
1"	$47.57
1 1/2"	$89.44
2"	$139.70
3"	$298.82
4"	$533.31
6"	$1,094.41
8"	$2,350.61
10"	$3,523.07

Monthly Flat Rate for Unmetered Water Service	
Single-family lots under 4,901 square feet	$46.64
Single-family lots 4,901 to 8,900 square feet	$55.19
Single-family lots 8,901 to 12,000 square feet	$62.73
Single-family lots 12,001 to 15,000 square feet	$69.22

The City's current wastewater rates are as follow:

Residential Monthly Waster Service Charge	
Monthly Charge per Billing Unit	$53.45

Commercial Sewer Rates	
Monthly Charge per Sewer Billing Unit	$53.45
Sewer consumption charge above 560 cubic feet of potable water usage	$0.04978 per cubic foot $0.00665 per gallon

5.2 Development of Proposed Rates

After the completion of the cost-of-service analyses described in Task 4, Raftelis will develop proposed water, wastewater, and recycled water rates for FY 2025-2026 and FY 2026-2027 *based on the City's current rate structures*. Our proposed consulting fee assumes that we will evaluate one potential alternative water and rate structure and one alternative wastewater rate structure.

Any alternative rate structures evaluated by Raftelis will produce adequate revenues to maintain water, wastewater, and recycled water financial sufficiency over short-, medium-, and long-term planning horizons. When considering potential alternative rate designs, Raftelis will perform the following analyses.

- ***City Rate Structure Objectives***: Evaluation of the effectiveness of the current water, wastewater, and recycled water rate structures in achieving the City's financial and policy objectives

- ***Fixed vs. Volumetric Revenue Recovery***: Impact of potential alternative rate structures on utility revenue stability/volatility

- ***Customer Class Definitions***: Appropriateness of the current customer class definitions

- ***Proposition 218 Compliance***: Ability of alternative rate structures to fully comply with Proposition 218 and other applicable California regulatory requirements

- ***Customer Bill Impacts***: Impact of potential alternative rate structures on customer bills (monthly and annual) across a broad range of demand (i.e., very low consumption to very high consumption customers)

- ***Eash of Customer Understanding***: Ability of customers to easily understand potential alternative rate structures and the ability of the City to administer such alternatives

5.3 Overarching Awareness of Proposition 218 Requirements

From the initial kickoff meeting through the development of proposed rates, we stay focused on the need to comply with the intent and requirements of Proposition 218. Throughout the financial planning, cost allocation, and rate design process we will work with City staff and legal counsel to help achieve this objective.

5.4 Comprehensive Bill Impact Calculations

Raftelis will calculate comprehensive bill impacts for the City's existing and proposed water, wastewater, and recycled water rates. Bill impacts will be calculated for multiple customer land use types and across a wide

distribution of monthly and annual consumption volumes. This will ensure that City staff is fully informed about potential customer bill ramifications.

DELIVERABLES:

- Proposed 5-year water and sewer rates for the period FY 2025-2026 and FY 2026-2027
- A 10-year projection of water, wastewater, and recycled water rates for the period FY 2025-2026 through FY 2034-2035
- The consideration of potential modifications to the City's existing water, wastewater, and recycled water utility rate structures
- Comprehensive customer bill impacts

Task 6: Rate Model Development and Training

The City's RFP seeks the development of Microsoft Excel financial model with a user friendly dashboard that can be used by City staff for scenario planning. The financial model must have the following capabilities:

- Ability to automatically produce a suite of reports and graphs based on dashboard inputs
- Model training for City staff that will allow staff to run alternative financial scenarios

During the project, City staff will be provided with working copies of drafts financial model so they can provide input into the development of the model. Once the project is complete, the City will be provided with fully functioning copies of the model and Raftelis personnel will train members of the City staff in its use. Our proposed consulting fee includes eight hours of onsite model training for City staff. An example financial model dashboard is shown below.

DELIVERABLES:

- A Microsoft Excel financial model designed to the City's specifications.

Raftelis will develop a customized financial model that incorporates a dashboard to allow you to easily run scenarios and see the impacts in real time. Shown here is a sample dashboard that we developed for another project.

Task 7: Cost-of-service Study Report

Raftelis will prepare a single consolidated report that describes the water, wastewater, and recycled water rate studies. Our approach to the development of cost-of-service study reports includes:

- ***Creation of a Detailed Administrative Record***: Raftelis prepares comprehensive rate study reports that fully document the assumptions, inputs, and analytical procedures used to develop proposed rates. Our reports provide clients with a detailed administrative record that can be referenced if rates are questioned or challenged in litigation.

- ***Collaboration with Legal Counsel***: Maintaining a close partnership with City legal counsel throughout the rate study process is a priority. As complex, and potentially controversial, cost allocation or rate design cost recovery issues arise during the rate study process, we will request review and input from the City's legal counsel.

- ***Review and Comment by the City***: Raftelis welcomes the comprehensive review and comment of preliminary/draft reports by City staff, City legal counsel, and the City Council.

DELIVERABLES:

- Draft cost-of-service rate study reports for review by City Staff and City Council
- Final cost-of-service rate study report

Task 8: Meetings and Presentations

Our proposed consulting fee includes the cost of:

- Onsite attendance at three public workshops including presentations at each workshop
- Onsite attendance, and the preparation of a presentation, for the City Council meeting where the proposed water, wastewater, and recycled water rates will be considered for adoption.

We will prepare draft PowerPoint presentations for each meeting. We will provide a draft of this presentation to City staff for their review, comment, and approval.

DELIVERABLES:

- Onsite attendance and presentations at three public workshops
- Onside attendance at the City Council meeting where proposed water, wastewater, and recycled water rates will be considered for adoption

Task 9: Proposition 218 Notice Assistance

Our proposed consulting fee includes a total of six (6) hours to assist staff with its proposed Proposition 218 notice. Our assistance will be limited to a review of the notice drafted by staff.

DELIVERABLES:

- Proposition 218 notice

Staff Assigned to Each Task

Tasks	Web Meetings	In-person Meetings	Hours					
			TC	JW	SP	SC	Admin	Total
Technical Tasks								
Task 1: Project Initiation, Management, and Kick-Off		1	2	12	2	2	2	20
Task 2: Analysis of Customer Demand Characteristics and Demand Forecasting	1		1	4	1	24		30
Task 3: Financial Planning and Revenue Requirement Forecasting	1		1	10	1	40		52
Task 4: Cost-of-Service Analysis	1		1	10	1	28		40
Task 5: Rate Structure Design and Proposed Rates	1			10	2	20		32
Task 6: Rate Model Development	4	1		2		16		18
Task 7: Cost-of-Service Study Report	1			12	1	50	1	64
Task 8: Meetings and Presentations		3		36		8		44
Task 9: Proposition 218 Notice Assistance	1			4		2		6
Total Meetings / Hours	**10**	**5**	**5**	**100**	**8**	**190**	**3**	**306**

TC – Todd Cristiano
JW – John Wright
SP – Sudhir Pardiwala
SC – Staff Consultant
Admin - Administration

NECESSARY EQUIPMENT, TRAINING, OR INSTALLATION SERVICES REQUIRED

We have included the necessary equipment, training and installation services required throughout the tasks listed in the project plan.

Work Schedule

Raftelis will complete the scope of services within the timeframe shown in the schedule below. The proposed schedule assumes a notice-to-proceed by the beginning of August 2024 and that Raftelis will receive the needed data in a timely manner and be able to schedule meetings as necessary. Project completion is estimated for April 2025.

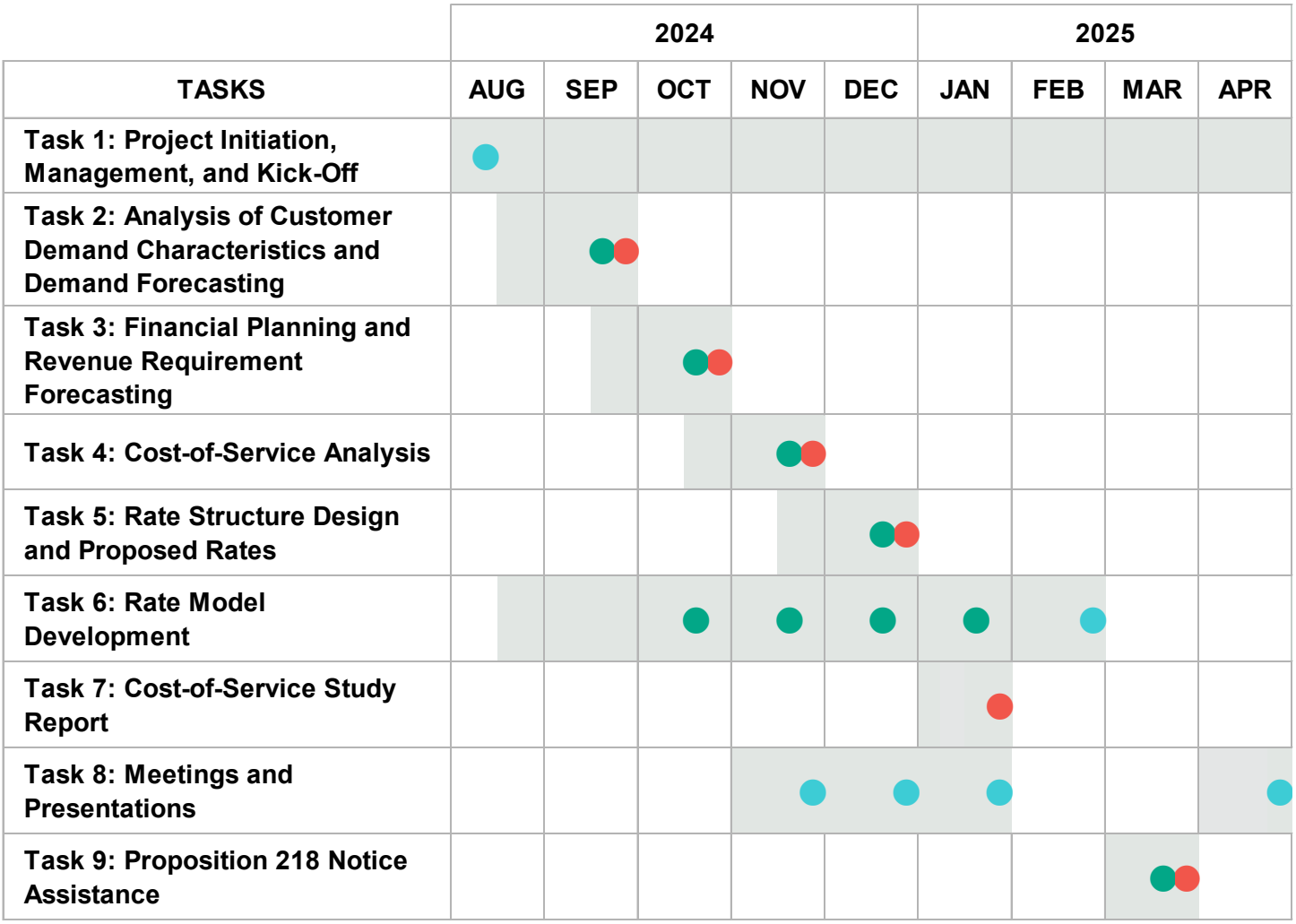

EXHIBIT “B”

TAB F: COST PROPOSAL

Tab F: Cost Proposal

Cost Proposal

The following table provides a breakdown of our proposed fee for this project. This table includes the estimated level of effort required for completing each task and the hourly billing rates for our project team members. Expenses include costs associated with travel and a $10 per hour technology charge covering computers, networks, telephones, postage, etc.

Tasks	Web Meetings	In-person Meetings	Hours						Total Fees & Expenses
			TC	JW	SP	SC	Admin	Total	
Technical Tasks									
Task 1: Project Initiation, Management, and Kick-Off		1	2	12	2	2	2	20	**$7,070**
Task 2: Analysis of Customer Demand Characteristics and Demand Forecasting	1		1	4	1	24		30	**$7,595**
Task 3: Financial Planning and Revenue Requirement Forecasting	1		1	10	1	40		52	**$13,255**
Task 4: Cost-of-Service Analysis	1		1	10	1	28		40	**$10,495**
Task 5: Rate Structure Design and Proposed Rates	1			10	2	20		32	**$8,670**
Task 6: Rate Model Development	4	1		2		16		18	**$5,260**
Task 7: Cost-of-Service Study Report	1			12	1	50	1	64	**$15,955**
Task 8: Meetings and Presentations		3		36		8		44	**$16,480**
Task 9: Proposition 218 Notice Assistance	1			4		2		6	**$1,780**
Total Meetings / Hours	**10**	**5**	**5**	**100**	**8**	**190**	**3**	**306**	
Hourly Billing Rate			**$360**	**$320**	**$375**	**$220**	**$100**		
Total Professional Fees			**$1,800**	**$32,000**	**$3,000**	**$41,800**	**$300**	**$78,900**	

TC - Todd Cristiano, Vice-President and Project Director
JW - John Wright, Senior Manager and Project Manager
SP - Sudhir Pardiwala, Executive Vice-President and Technical Reviewer
SC - Staff Consult
Admin - Administration

Total Fees Before Continency	**$78,900**
Total Expenses Before Continency	**$7,660**
Total Fees & Expenses Before Contingency	**$86,560**
Project Contingency	**$5,000**
Total Project Fee After Contingency	**$91,560**

Hourly Billing Rates

Project team hours and expenses will be billed on the same invoice. Expenses related to travel will be billed at cost. Additional services outside the agreed upon scope of work will be billed on a time and materials basis. Raftelis' billing rates can be found below. These rates will be in effect for calendar year 2024 and will then increase annually by 3% unless specified otherwise by contract.

POSITION	HOURLY BILLING RATE**
Chair/Chair Emeritus	$500
Chief Executive Officer/President	$450
Executive Vice President	$400
Vice President	$360
Senior Manager	$320
Principal Consultant	$295
Manager	$285
Senior Consultant	$250
Consultant	$220
Creative Director	$220
Associate	$185
Graphic Designer	$160
Analyst	$135
Administration	$100
Technology Charge*	$10

**Technology/Communications Charge: This is an hourly fee charged monthly for each hour worked on the project to recover telephone, facsimile, computer, postage/overnight delivery, conference calls, electronic/computer webinars, photocopies, etc.*

***For services related to the preparation for and participation in deposition and trials/hearings, the standard billing rates listed above will be increased by an amount up to 50 percent.*

COUNCIL COMMUNICATION

CC #: 3487
File #: 0704-01

Title:	Duke Davis Water Feature Renovation Project - Notice of Completion
Contact:	Kelly Appier 916-774-5927 ksappier@roseville.ca.us

Meeting Date: 8/21/2024
Item #: 7.13.

RECOMMENDATION TO COUNCIL

Staff recommends that the City Council accept the Duke Davis Water Feature Renovation Project as complete and adopt a resolution authorizing the Parks, Recreation & Libraries Director to execute the attached Notice of Completion.

BACKGROUND

The renovation site is at the Duke Davis Park on Northpark Dr. The project replaced an existing water and sand play area with a new misting water feature. The existing water play feature was non-functioning and an inefficient use of water. The project removed the existing sand play area, added concrete and a new misting water play feature. The scope of work also included permanent disabling of the existing water play feature. The Parks, Recreation & Libraries Department has made a final inspection of the Duke Davis Water Feature Renovation Project and has found that all contract work has been completed in accordance with the improvement plans and specifications. The project is now ready for acceptance. In accordance with City specifications, the contractor shall guarantee the installation of these improvements for a period of twelve (12) months from the date of this Notice of Completion.

FISCAL IMPACT

Funding of $138,000 was approved using the North Roseville Community Facilities District No. 2 (Services District), Zone C. There will be no increase in maintenance costs and no General Fund impact.

ENVIRONMENTAL REVIEW

The proposed project involves the replacement of existing structures and facilities. This activity is categorically exempt from CEQA as a Class 2 Exemption (State CEQA Guidelines Section 15302). This Notice of Completion meets the above criteria and is not subject to CEQA. No

additional environmental review is required.

CITY COUNCIL STRATEGIC PLAN/OVERARCHING GOALS

Goal B – Support community engagement and advocacy
Goal C – Maintain a safe and healthy community
Goal E – Deliver exceptional city services
Goal F – Invest in well-planned infrastructure and growth

Respectfully Submitted,

Kelly Appier, Park Development Project Manager

Jill Geller, Parks, Recreations, and Libraries Director

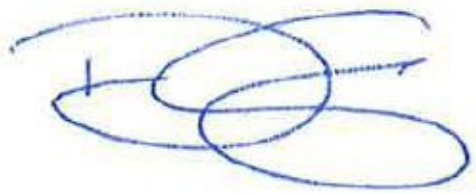

_____
Dominick Casey, City Manager

ATTACHMENTS:

Description

Vicinity Map

Resolution 24-288

NOC

Exhibit A

CEQA Exemption

Duke Davis Park

Vicinity Map

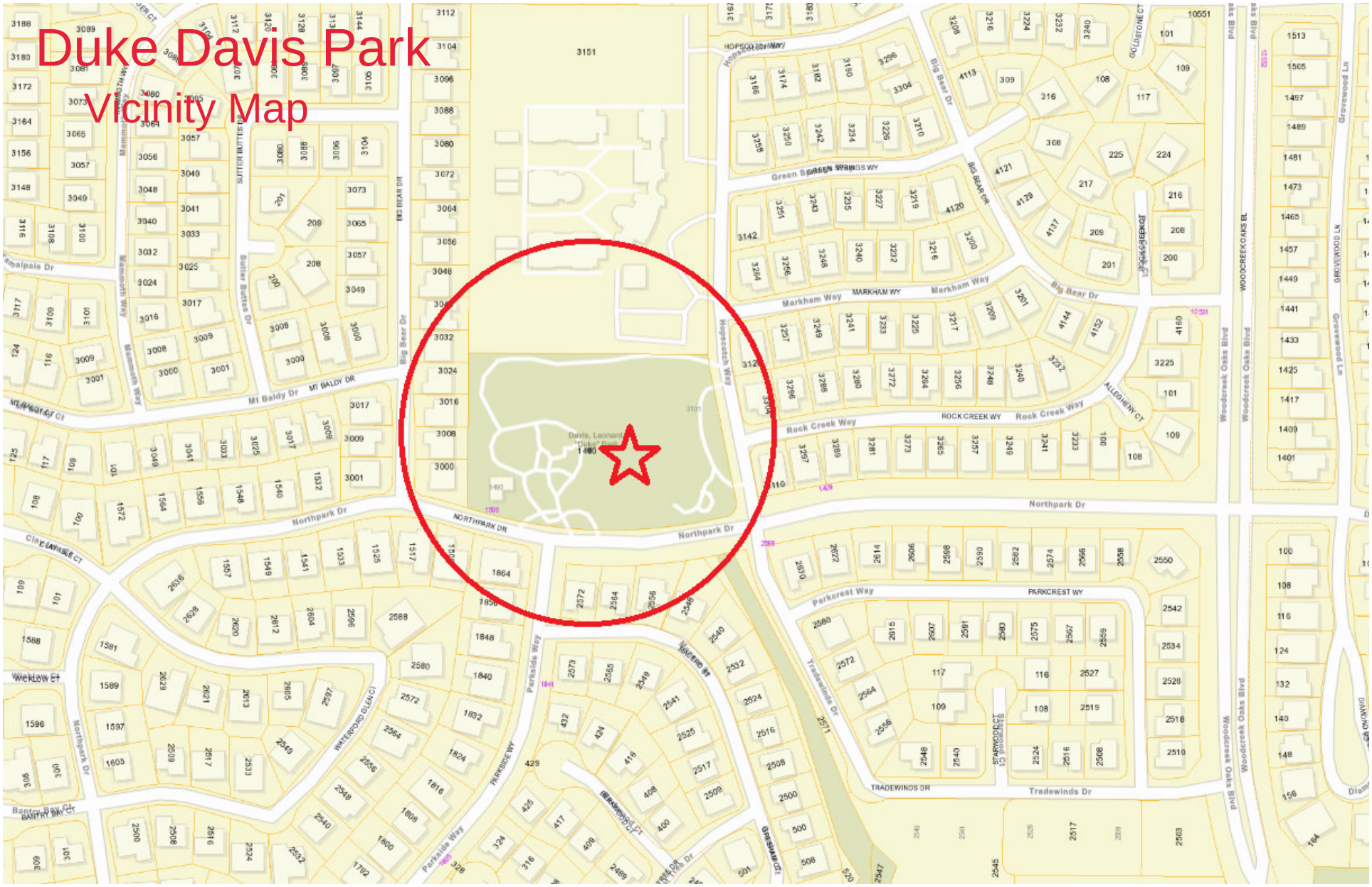

RESOLUTION NO. 24-288

ACCEPTING THE PUBLIC WORK KNOWN AS DUKE DAVIS WATER FEATURE RENOVATION PROJECT, APPROVING THE "NOTICE OF COMPLETION", AND AUTHORIZING THE PARKS, RECREATION AND LIBRARIES DIRECTOR TO EXECUTE SAID NOTICE ON BEHALF OF THE CITY OF ROSEVILLE

BE IT RESOLVED by the City Council of the City of Roseville as follows:

1. The "Notice of Completion" on file in the City Clerk's Department relative to that public work known as Duke Davis Water Feature Renovation Project, has been approved and the public work accepted.

2. The Parks, Recreation and Libraries Director is hereby authorized and directed to execute said Notice on behalf of the City of Roseville.

PASSED AND ADOPTED by the Council of the City of Roseville this_____day of _____, 2024, by the following vote on roll call:

AYES COUNCILMEMBERS:

NOES COUNCILMEMBERS:

ABSENT COUNCILMEMBERS:

_____
MAYOR

ATTEST:

_____
City Clerk

RECORDING REQUESTED BY AND WHEN
RECORDED MAIL TO:

CITY CLERK
CITY OF ROSEVILLE
311 VERNON STREET
ROSEVILLE, CA 95678

Exempt from recording fees
Pursuant to Gov't Code §27383

NOTICE OF COMPLETION

NOTICE IS HEREBY GIVEN that the public work of improvement known as the Duke Davis Water Feature Renovation Project was completed and accepted by the City of Roseville on _____. The location is situated in the City of Roseville, County of Placer, State of California and is indicated on the attached map, marked as Exhibit "A" and incorporated herein by this reference. The real property herein described is owned by the City of Roseville, 311 Vernon Street, Roseville CA 95678.

The direct/general contractor on said project was Sitewise Construction, Inc..

The surety on said project was The Ohio Casualty Insurance Company

_____.

_____

Jill Geller

Parks, Recreation & Libraries Director
City of Roseville
Owner

ATTEST:

_____

Carmen Avalos, City Clerk

State of California)
County of Placer)

I, Jill Geller, being first duly sworn, depose and say: I am the Parks, Recreation & Libraries Direct of the City of Roseville, a municipal corporation in the State of California, owner of the property described in the above Notice. I am duly authorized to make this verification for and on behalf of the City of Roseville. I have read the Notice of Completion and know its contents and the facts stated therein are true.

_____

Jill Geller

Parks, Recreation & Libraries Director
City of Roseville

A notary public or other officer completing this certificate verifies only the identity of the individual who signed the document to which this certificate is attached, and not the truthfulness, accuracy, or validity of that document.

State of California)
County of Placer)

Subscribed and sworn to (or affirmed) before me on this _____ day of _____, 20___, Jill Geller

proved to me on the basis of satisfactory evidence to be the person(s) who appeared before me.

_____

Place Notary Seal and/or Stamp Above *Signature of Notary Public*

Exhibit A

Duke Davis Park
1460 North Park Dr., Roseville, CA 95678

The project scope of work includes demo of the existing sand play area, create a new misting pole water play area, replacing a concrete panel, and permanent disabling of existing water play channel.

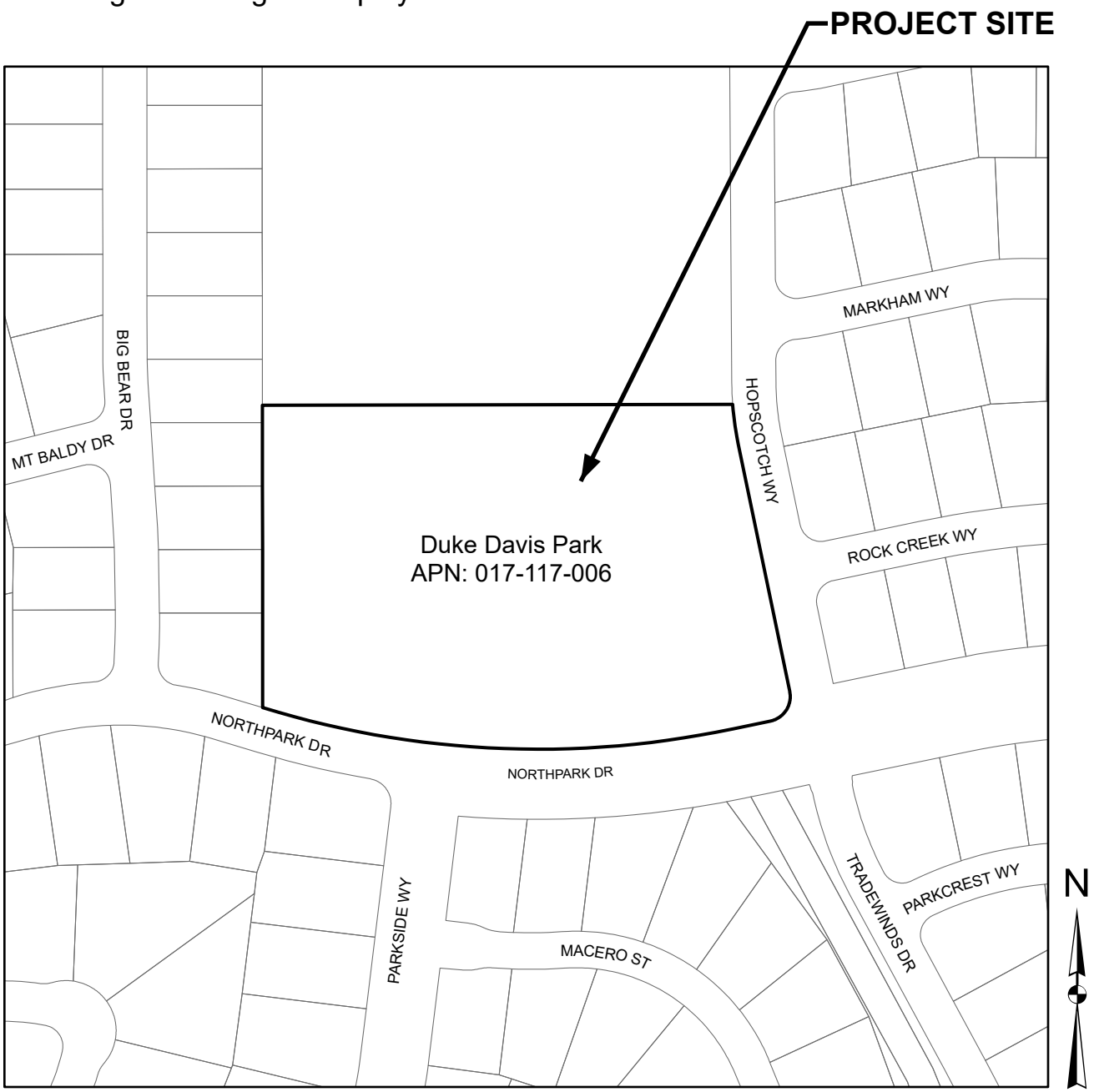

Notice of Exemption

To: Placer County Clerk
Recorder's Office
2954 Richardson Drive
Auburn, CA 95603

From: City of Roseville
Development Services Dept.
311 Vernon Street
Roseville, CA 95678

Project Title: Duke Davis Water Feature Renovation Project

Project Location(s): 1500 Northpark Drive (APN 017-117-006-000), City of Roseville, CA.

Project Description: The Parks, Recreation and Libraries Department proposes replace an existing water and sand play area with a new misting water feature. The existing water play feature is non-functioning and was an inefficient use of water. The project will convert an existing sand play area into a new misting water play feature. The scope of work will also include permanent disabling of the existing water play feature.

Public Agency Approving Project: Roseville City Council

Agency/Individual Carrying Out Project: City of Roseville Park, Recreation and Libraries Department

Reason why this Project is Exempt: This project qualifies for a Class 2 Exemption as described in Section 15302 of the California Environmental Quality Act (CEQA) guidelines which states:

> "Class 2 consists of replacement or reconstruction of existing structures and facilities where the new structure will be located on the same site as the structure replaced and will have substantially the same purpose and capacity as the structure replaced.

The project activities are replacement and/or repair of existing structures and equipment and will have the same purpose and capacity as the existing structures and equipment. The misting water feature is more water efficient than the existing water play feature. Therefore, the Class 2 Exemption is applicable to the proposed project.

Lead Agency Contact Person: Kelly Appier, Park, Recreation and Libraries Department, 316 Vernon Street, Roseville, CA 95678. 916-774-5927.

Signature: _____ Date: 9-20-2023

Jessica Lynch, Environmental Coordinator
City of Roseville

COUNCIL COMMUNICATION

CC #: 3496
File #: 0800-02

Title:	RiverArc Project – Memorandum of Agreement Amendment
Contact:	Sean Bigley 916-774-5513 sbigley@roseville.ca.us

Meeting Date: 8/21/2024
Item #: 7.14.

RECOMMENDATION TO COUNCIL

Staff recommends that the City Council adopt a resolution to approve Amendment 1 of the Amended and Restated Memorandum of Agreement for Planning and Design of the RiverArc Project to allow for Roseville's participation in the environmental review and project design of the RiverArc Project, and authorize the City Manager to execute it on behalf of the City of Roseville.

BACKGROUND

Roughly eighty percent of Sacramento-area water agencies currently depend solely on the American River watershed for their water supply. The RiverArc Project aims to redistribute a portion of the region's water reliance on the American River to the much larger Sacramento River.

The RiverArc project, stemming from the 2000 Water Forum Agreement, once built will offer regional benefits by optimizing groundwater use, increasing Folsom Reservoir storage during dry years, and redirecting diversions to meet municipal water needs while protecting fish habitats in the Lower American River.

The RiverArc Project will include construction of water treatment and transmission facilities to deliver Sacramento River water supplies to the region upon implementation. The facilities are planned to include use of an existing raw water intake (Pritchard Lake), owned by the Natomas Mutual Water Company, on the Sacramento River, that includes state-of-the-art fish screens, a raw water booster pump station, a transmission pipeline to deliver raw water for treatment, a water treatment plant, and treated water delivery pipelines, that would ultimately connect to the City of Roseville's drinking water system, on its western edge.

The RiverArc Project Partners currently consists of the Placer County Water Agency (PCWA), Sacramento County Water Agency (SCWA) and the City of Sacramento (Sacramento). The RiverArc Project Partners estimate that upon completion of the project design and environmental work (proposed in this item), the subsequent Phase 1 Construction work will cost between $250 and $350 million; however, the costs are highly dependent on Phase 1 capacity and the project

participants involved. Any participation in future phases of the RiverArc Project, beyond what is included in this item, will come to the Roseville City Council for future consideration as separate items.

In the fall of 2023, Roseville staff was approached by the RiverArc Partners about Roseville's potential interest in re-joining the RiverArc partnership.

Some of the benefits to the City of Roseville associated with participation in RiverArc are expected to include:

• Potential in-lieu recharge of the groundwater basin due to strategic use of surface water between the American River and the Sacramento River tied to hydrological conditions;

• More available surface water to support Roseville's existing Aquifer Storage and Recovery (ASR) program;

• An even more reliable surface water supply for Roseville by the addition of a second raw intake on the Sacramento River (instead of the current single raw water intake at Folsom Dam);

• Connection of the American River and Sacramento River supplies by joining the RiverArc treated water pipeline to the cooperative pipeline;

• Attractive project for state and federal funding due to the regional, environmental, and climate mitigation nature of the project leading to lower customer costs; and,

• Greater regional water supply reliability associated with the operational flexibility provided to the Bureau of Reclamation by RiverArc.

Roseville began participation in the RiverArc Project in April 2016 working with the other five partners (at that time) on early project design, siting, project advocacy and communication. On April 7, 2019, the City of Roseville decided to discontinue participation in the RiverArc Project to focus Roseville staff time on the development of Roseville's Aquifer Storage and Recovery (ASR) Program. With the ASR Program now successfully in place and operating optimally, focusing on RiverArc as another way to increase Roseville's long-range water supply reliability is appropriate and well timed.

Due to the recent award by the California Wildlife Conservation Board of $5.1 million to fund the development of the environmental document for the RiverArc Project, now is an ideal time for the City of Roseville to re-join the RiverArc Project as it is an opportunity for Roseville's future project capacity needs to be included in the environmental document's project description and would position Roseville well to participate in future stages of the RiverArc Project, if the City of Roseville chooses to do so.

Participating in the environmental review and project design of the RiverArc Project, as part of this item, does not obligate the City of Roseville to participate in future phases. Any participation in future phases of the RiverArc Project, beyond what is included in this item, will come to the Roseville City Council for future consideration as separate items.

FISCAL IMPACT

Roseville's participation in this phase of the RiverArc Project requires two participation payments totaling $944,277 to Placer County Water Agency (PCWA). The required participation payments are budgeted in the FY2024-25 budget and planned for the FY2025-26 budget in the River Arc Project, which is funded through the Water Construction Fund which receives funding via water connection fees paid by developers and other parties that connect into the City's drinking water system.

ENVIRONMENTAL REVIEW

The California Environmental Quality Act (CEQA) does not apply to activities that will not result in a direct or reasonably foreseeable indirect physical change in the environment, or is otherwise not considered a project as defined by CEQA Statute §21065 and CEQA State Guidelines §15060(c)(3) and §15378. The proposed Amendment for Planning and Design of the RiverArc Project meets the above criteria and is not subject to CEQA. No additional environmental review is required.

CITY COUNCIL STRATEGIC PLAN/OVERARCHING GOALS

Goal F - Invest in well-planned infrastructure and growth

Respectfully Submitted,

Sean Bigley, Environmental Utilities Assistant Director

Richard Plecker, Environmental Utilities Director

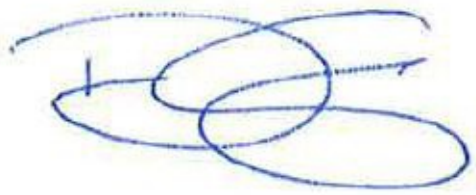

_____

Dominick Casey, City Manager

ATTACHMENTS:

Description

Resolution 24-295

RiverArc Project Map

Pritchard Lake Raw Water Intake

Amendment 1 to Amended and Restated RiverArc MOA

Amended and Restated MOA for Planning and Early Design of the Riverarc Project - signed

RESOLUTION NO. 24-295

APPROVING AMENDMENT 1 TO AMENDED AND RESTATED MEMORANDUM OF AGREEMENT, BY AND BETWEEN THE CITY OF SACRAMENTO, SACRAMENTO COUNTY WATER AGENCY, AND PLACER COUNTY WATER AGENCY AND THE CITY OF ROSEVILLE, AND AUTHORIZING THE CITY MANAGER TO EXECUTE IT ON BEHALF OF THE CITY OF ROSEVILLE

WHEREAS, Amendment 1 to Amended and Restated Memorandum of Agreement of Agreement for Planning and Early Design of the RiverArc project, by and between the City of Sacramento, Sacramento County Water Agency, and Placer County Water Agency and the City of Roseville, has been reviewed by the City Council;

NOW, THEREFORE, BE IT RESOLVED by the Council of the City of Roseville that said Memorandum of Agreement is approved and that the City Manager is authorized to execute it on behalf of the City of Roseville.

PASSED AND ADOPTED by the Council of the City of Roseville this____day of _____, 2024, by the following vote on roll call:

AYES COUNCILMEMBERS:

NOES COUNCILMEMBERS:

ABSENT COUNCILMEMBERS:

_____
MAYOR

ATTEST:

_____
City Clerk

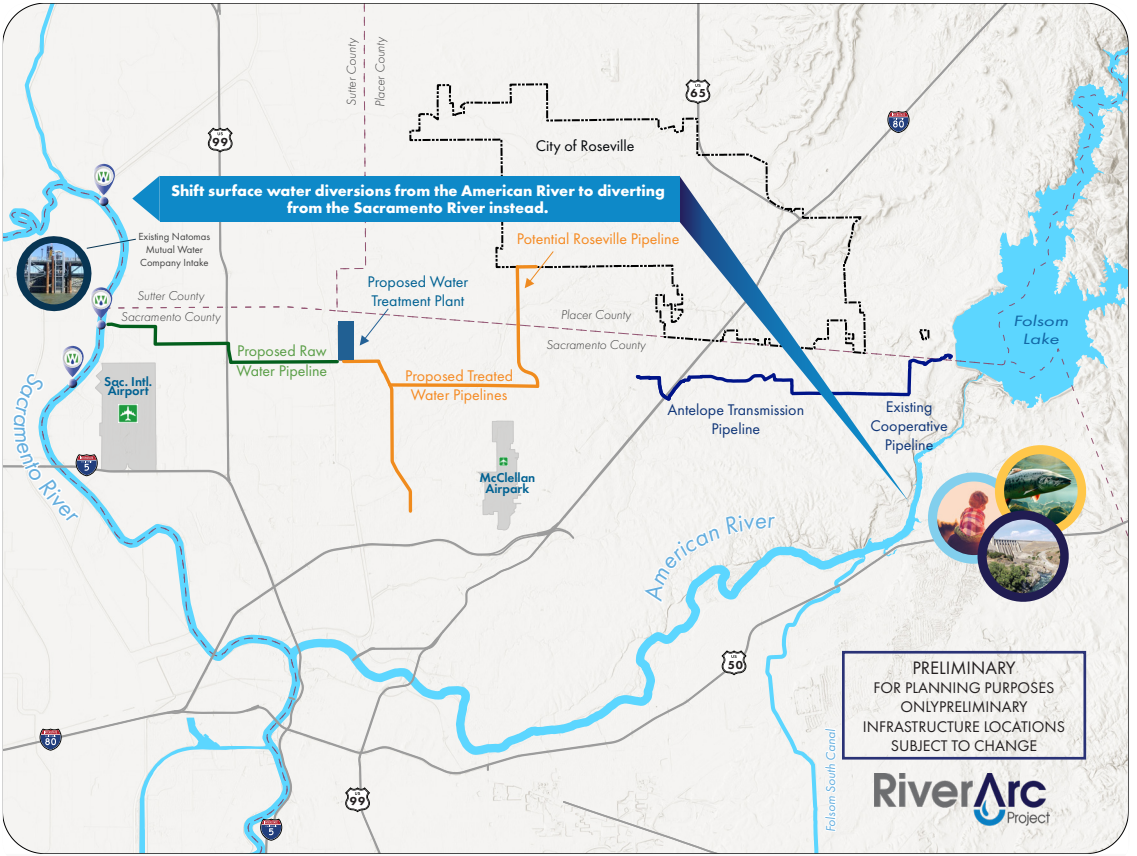
Shift surface water diversions from the American River to diverting from the Sacramento River instead.
Existing Natomas Mutual Water Company Intake
Sutter County
Sacramento County
Proposed Raw Water Pipeline
Proposed Water Treatment Plant
Proposed Treated Water Pipelines
Potential Roseville Pipeline
Sutter County
Placer County
City of Roseville
Placer County
Sacramento County
Antelope Transmission Pipeline
Existing Cooperative Pipeline
Folsom Lake
Sac. Intl. Airport
McClellan Airpark
Sacramento River
American River
Folsom South Canal
PRELIMINARY
FOR PLANNING PURPOSES ONLYPRELIMINARY
INFRASTRUCTURE LOCATIONS
SUBJECT TO CHANGE
RiverArc Project

Pritchard Lake Raw Water Intake: View looking southeast from Sacramento River
Low river flows, (1) fish screens outside the water.

View looking east from Sacramento River
Low river flows, (1) fish screens outside the water.

View looking east from Sacramento River
High river flows, fish screens outside the water.

AMENDMENT 1 TO
AMENDED AND RESTATED MEMORANDUM OF AGREEMENT FOR PLANNING AND EARLY DESIGN OF THE RIVERARC PROJECT

WHEREAS, Paragraph 7, subdivision (a) of the Amended And Restated Memorandum Of Agreement For Planning And Early Design Of The RiverArc Project (Agreement) provides that the Agreement may be amended in writing upon approval of all Parties and their respective governing bodies; and

WHEREAS, Paragraph 7 subdivision (b) of the Agreement provides that new parties can be added to the Agreement and such addition must be approved in writing by all Parties and memorialized through an amendment to this Agreement.

NOW, THEREFORE, the parties agree as follows:

1. The City of Roseville shall be added as a Party to the Agreement.

2. Paragraph 7, subdivision e, of the Agreement is hereby amended to include the City of Roseville to the list of Parties in that paragraph.

3. Paragraph 10, subdivision a., is amended as follows:

   The first bullet point is amended to add the following sentence: Since the time of execution, Roseville commits a contribution to the local cost share match to WC-2376AH, as detailed in Revised Exhibit A.

   The last bullet point is amended to add the City of Roseville to the list of parties.

4. Exhibit A to the Agreement is replaced with Revised Exhibit A, attached to this Amendment 1.

IN WITNESS THEREOF, the Parties have executed this Amendment 1 to the Agreement as of the dates written below.

[SIGNATURE PAGES TO FOLLOW]

REVISED EXHIBIT A
FISCAL CONTRIBUTIONS SUMMARY

RiverArc Project Party[1]	Fiscal Year 2016/17 to 2023/24 Contributions[2,3]	Additional WCB Grant Cost Share Match	Subtotal[4,5]	Amendment 1[6,7]	Revised Total
Placer County Water Agency (PCWA)	$ 712,500.00	$ 200,000.00	$ 912,500.00	$ 100,000.00	$ 1,012,500.00
City of Sacramento (Sacramento)	$ 712,500.00	$ 200,000.00	$ 912,500.00	$ 100,000.00	$ 1,012,500.00
Sacramento County Water Agency (SCWA)	$ 712,500.00	-	$ 712,500.00	$ 100,000.00	$ 812,500.00
California American Water (CalAm)	$ 654,199.10	$ 75,000.00	$ 729,199.10	-	$ 729,199.10
City of Roseville	$ 88,223.00	-	$ 88,223.00	$ 944,277.00	$ 1,032,500.00
Rio Linda/Elverta Community Water District	$ 86,012.00	-	$ 86,012.00	-	$ 86,012.00
TOTAL CONTRIBUTIONS	**$ 2,965,934.10**	**$ 475,000.00**	**$ 3,440,934.10**	**$ 1,244,277.00**	**$4,685,211.10**

Notes:

1. Reflects all current and previous Parties per 2016 Memorandum of Agreement (MOA) Amendments 1, 2, and 3.
2. Amounts shown are reflective of any surplus funds that were returned to the withdrawing Party at the time of withdrawal.
3. Amounts shown are reflective of Parties' (PCWA, Sacramento, SCWA, and CalAm) equal share of partnership contributions totaling, $700,000, to the Wildlife Conservation Board's (WCB) Streamflow Enhancement Grant Program local cost share requirement.
4. Amounts are not reflective of "Administrative Expenses" incurred by the Administering Agency under the terms of Section 3.b of this MOA, which includes but are not limited to, expenses incurred in utilizing staff time and resources of the Administering Agency.
5. Amounts are not reflective of any internal, in- house, or administrative costs or expenses incurred by any Party related to that Party's obligations under Section 7 and 8 of this MOA. Those costs or expenses are the sole responsibility of that Party.
6. Reflects Fiscal Year (FY) 2024/25 annual contribution of $100,000. RiverArc Project's FY is from July 1 to June 30. Annual contributions are set according to Section 8 of this MOA.
7. Roseville's re-entry balance consists of the following: 1) FY 2016/17 through FY 2023/24 annual contributions of $712,500 in arrears; 2) WCB Grant Cost Share Match of $200,000 in arrears; 3) FY 2016/17 through FY 2023/24 administrative fees of $20,000 comparable to previous non-administrative support from PCWA, Sacramento, and SCWA; 4) FY 2024/25 annual contribution of $100,000, future year contributions are subject to budgetary approval by Roseville's governing body. The City of Roseville has $88,223 in available credit from prior FY 2016/17 to 2018/19 contributions to the RiverArc Project. The outstanding re-entry balance for Roseville participation is $944,277, after available credit has been applied. FY 2024/25 contributions will be invoiced by August 31, 2024, and payable within 30 days of approval of the Amendment 1 to Amended and Restated Memorandum of Agreement for Planning and Early Design of the RiverArc Project by Roseville's governing body. The remaining balance of $844,277 is due by July 2025 or the final RiverArc EIR completion date, whichever is later.

Placer County Water Agency

_____ _____

Robert Dugan, Chair of the Board
Placer County Water Agency

Date

ATTEST:

_____

Lori Young
Clerk to the Board

City of Sacramento

By: _____ _____
Title Date

Approved as to Form:

_____
Title

ATTEST:

_____
Title

Sacramento County Water Agency

_____ _____

Name, Title Date
Sacramento County Water Agency

ATTEST:

_____

Name
Title

CITY OF ROSEVILLE, a
municipal corporation

BY:

_____
DOMINICK CASEY
City Manager

ATTEST:

BY:

_____
CARMEN AVALOS
City Clerk

APPROVED AS TO FORM:

BY:

_____
MICHELLE SHEIDENBERGER
City Attorney

APPROVED AS TO SUBSTANCE:

BY:

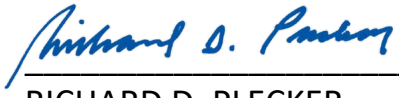

_____
RICHARD D. PLECKER
Environmental Utilities Director

City of SACRAMENTO
Office of the City Clerk

CONTRACT ROUTING SHEET

Contract Cover/Routing Form: Must Accompany ALL Contracts; however, it is NOT part of the contract.

General Information (Required)

Original Contract # (supplements only): _____ Supplement/Addendum #: _____

Assessor's Parcel Number(s): _____

Contract Effective Date: 06/19/2024 Contract Expiration Date (if applicable): _____

$ Amount (Not to Exceed): $1,000,000.00 Adjusted $ Amount (+/-): _____

Other Party: SCWA and PCWA

Project Title: Memorandum of Agreement for Planning and Early Design of the Riverarc Project

Project #: NA Bid/RFQ/RFP #: NA

City Council Approval: YES if YES, Council File ID#: 2024-00802

Contract Processing Contacts

Department: Utilities Project Manager: Michelle Carrey MC

Contract Coordinator: Jacqueline Martinez Email: jmartinez@cityofsacramento.org

Department Review and Routing

Construction Mgmt:	(Signature)	Jun 20, 2024 (Date)
Supervisor:	(Signature)	Jun 20, 2024 (Date)
Division Manager:	Paul Barnes (Signature)	Jun 21, 2024 (Date)
Other:	Chuong (Ryan) Pham for Pravani Vandeyar Chuong (Ryan) Pham for Pravani Vandeyar (Jun 25, 2024 12:20 PDT)	

Director of Utilities:

Special Instruction/Comments (i.e. recording requested, other agency signatures required, etc.)

☐ **Recording Requested** ☐ **Other Party Signature Required**

----------FOR CLERK & IT DEPARTMENTS ONLY – DO NOT WRITE BELOW THIS LINE----------

AMENDED AND RESTATED
MEMORANDUM OF AGREEMENT FOR
PLANNING AND EARLY DESIGN OF THE RIVERARC PROJECT

RECITALS

A. In 2016, the City of Roseville, the City of Sacramento, the Sacramento County Water Agency (SCWA), California American Water (CalAm), the Rio Linda/Elverta Community Water District and Placer County Water Agency (PCWA) entered into the "Memorandum of Agreement for Planning of the RiverArc Project".

B. Between 2019 and 2023 Rio Linda/Elverta Community Water District, the City of Roseville, and CalAm withdrew from the Memorandum of Agreement for Planning of the RiverArc Project.

C. The remaining parties to the Memorandum of Agreement for Planning of the RiverArc Project - specifically, the City of Sacramento, SCWA and PCWA (Parties) now desire to amend and restate the Memorandum of Agreement for Planning of the RiverArc Project to describe the current agreement terms amongst the remaining parties.

D. The Parties and other stakeholders throughout the greater Sacramento area have prepared a Phase 1 planning study for the RiverArc Project (also known as the Sacramento River Regional Water Reliability Project) which was completed in September of 2015. The purpose of the Phase 1 planning study was to conceptually evaluate ways to enhance water supply diversity and reliability on a regional scale to benefit regional water suppliers, increase the sustainability of regional groundwater supplies, and provide additional environmental protection of the American River Watershed.

E. The primary purposes of the RiverArc Project ("Project") are: (1) to divert water through existing, or potentially upgraded, intake(s) from the Sacramento River to offset water diverted from the American River, deliver that water through new raw water pipelines to a new regional water treatment plant, and distribute the treated surface water through new and existing pipelines to the Parties; (2) alleviate pressure on the lower American River ecosystem; and (3) to recharge the groundwater storage basin via "direct" or "in lieu" recharge in wet years, so that groundwater can be used in years when surface water supplies are insufficient to meet the needs of the Sacramento region and potentially other areas in northern California.

F. Through this amendment to the Memorandum of Agreement for Planning of the RiverArc Project, the Parties now intend: (1) to coordinate their efforts in Planning and Early Design (as defined below) of the Project; (2) to memorialize the Parties' express understanding relating to such Planning and Early Design efforts; and (3) to allocate costs to be expended in administering

the Project's Planning and Early Design.

NOW THEREFORE, in consideration of the mutual obligations set forth herein, the Parties hereby agree as follows:

AGREEMENT

1. Incorporation of Recitals. The foregoing recitals are hereby incorporated by reference.

2. Title. The title of the agreement between the Parties is hereby changed from "Memorandum of Agreement for Planning of the RiverArc Project" to "Amended and Restated Memorandum of Agreement for Planning and Early Design of the RiverArc Project" ("Agreement"), as is reflected by the title of this document. This Amended and Restated Memorandum of Agreement for Planning and Early Design of the RiverArc Project replaces the Memorandum of Agreement for Planning of the RiverArc Project in its entirety.

3. Definitions. When used in this Agreement, the following terms shall have the meanings set forth below:

a. "Administering Agency" means a Party, appointed by the other Parties from time to time in the manner set forth in this Agreement, that is authorized to administer the Project's Planning and Early Design as set forth herein.

b. "Administrative Expenses" means those authorized expenses incurred by the Administering Agency under the terms of this Agreement, which expenses include, but are not limited to, expenses incurred in hiring outside consultants and in utilizing staff time and resources of the Administering Agency.

c. "Budget" means the budget contemplated by this Agreement which Budget shall be approved by the governing body of each Party prior to funding. The Budget shall include the allocation of Funds and the apportionment of Administrative Expenses to be shared among the Parties, not necessarily in equal shares.

d. "Fiscal Year" means an accounting period specified by the Administering Agency with the approval of all of the Parties.

e. "Funds" means funds received by the Administering Agency from the Parties, or from state, federal or other sources, including those from grant funding agreements, for use in the Planning and/or Early Design or for other activities expressly authorized under the terms of this Agreement.

f. "Party Representative" means the person (or alternates), designated from time to time by the governing body of each Party, who is authorized to

take actions under this Agreement to the extent permitted, until such time as the governing body of such Party notifies the Administering Agency and the other Parties, as provided in Section 17 of this Agreement of a change in its Party Representative.

g. "Planning" means technical studies and investigations, preliminary facility planning, preparation of preliminary cost estimates and allocations, preparation and submission of grant funding applications and grant administration, conducting water supply modeling, preparing environmental analyses and evaluations, preparing a programmatic environmental impact report and preparation of permitting applications for the RiverArc Project.

h. "Early Design" means development of design criteria, drawings, and technical studies, including water rights, contract rights, and right-of-way analyses, to comply with California Environmental Quality Act (CEQA)/ National Environmental Protection Act (NEPA) and prepare for Project implementation (i.e. final design, construction procurement, and purchase of necessary easements and real property).

4. Purpose of this Agreement. The purpose of this Agreement is to memorialize the Parties' coordinated efforts in Project Planning and Early Design and to allocate Funds and Administrative Expenses to be expended in administering the Project's Planning and Early Design. Nothing in this Agreement grants the Administering Agency or the Parties any power or authority to alter any water right, contract right or any similar right of any Party or to direct the water-delivery practices of any Party without the prior written consent of the Party and receipt of all required approvals. This Agreement is intended to facilitate and provide for Planning and Early Design activities only. The Parties anticipate that any future development or implementation of the Project would be governed by future agreement(s), and approval of any such agreements will be subject to compliance with the CEQA and all other applicable environmental laws or regulations.

5. Actions of the Representatives of the Parties. Once this Agreement is approved by the governing body of each Party and Party Representatives have been designated, Party Representatives shall have authority to take action under this Agreement on behalf of the Party that he or she represents, consistent with the approved Budget. An affirmative vote by a majority of the Party Representatives shall be required for any action under this Agreement, except for the actions set forth in Sections 3.d, 7, 8, and 17 of this Agreement, which shall require approval of all of the Parties. Party Representatives may take action contemplated by this Agreement at a meeting, during a telephone conference call, through electronic correspondence or other means approved by the Party Representatives from time to time, in writing, provided each Party Representative was provided reasonable notice of the proposed action in accordance with Section 18, below, and a reasonable opportunity to participate in the consideration of the action item. Reasonable notice shall refer to a period of not less than thirty (30) days except in cases of an emergency.

6. Appointment and Actions of the Administering Agency. The Parties

hereby initially appoint PCWA to be the Administering Agency under this Agreement. The Parties may change the Administering Agency from time to time. None of the employees of the Administering Agency will be deemed to be employed by any of the Parties other than the Administering Agency. The Administering Agency will be responsible for confirming and communicating to all Parties, in writing, the actions approved by the Parties from time to time. In carrying out its duties under this Agreement, the Administering Agency shall comply with the legal and regulatory requirements applicable to the Administering Agency (e.g., procurement procedures). The Administering Agency shall have the authority to take the following actions to the extent they are consistent with the approved Budget, the terms of this Agreement and any administrative procedures adopted by the Parties according to Section 7.d of this Agreement:

a. To undertake or arrange for approved Planning and Early Design activities in accordance with the provisions of this Agreement;

b. To apply for, receive, authorize, and disburse Funds for use in Project Planning and Early Design activities, or for other activities authorized by this Agreement, including those awarded through grant funding agreements;

c. To accumulate Funds for the purposes herein mentioned, and to invest Funds subject to applicable law, provided such Funds are not presently needed to pay costs related to the authorized uses of such Funds under this Agreement;

d. To adopt administrative rules and regulations, and operating rules and regulations for Planning and Early Design of the Project to the extent consistent with any administrative procedures adopted by the Parties pursuant to Section 7.d of this Agreement;

e. To make and enter into contracts reasonably necessary to carry out the purpose of this Agreement, consistent with the approved Budget;

f. To cooperate, act in conjunction and/or contract with the United States, the State of California, or any agency thereof, counties, municipalities, public entities (including joint powers authorities) and private corporations of any kind (including, without limitation, mutual water companies and investor-owned utilities), and persons, or any of them, as reasonably necessary for the purpose of this Agreement, consistent with the approved Budget;

g. To contract for legal and/or consulting services, and to employ such other persons or employees, as reasonably necessary for the purpose of this Agreement.

7. Actions Requiring Approval by All Parties. The following actions will not be effective unless approved by all of the Parties:

a. Amendment of Agreement. Except pursuant to withdrawal of a Party in accordance with Section 17, this Agreement may be amended only in writing upon approval by all of the Parties and their respective governing bodies.

b. Addition of Parties. New Parties must be approved in writing by all Parties and memorialized through an amendment to this Agreement.

c. Adoption of Budget. The adoption of the annual Budget requires written approval by all of the Parties.

d. Administrative Procedures. Upon approval by all of the Parties, the Parties may create and adopt administrative procedures for the administration of this Agreement and the Project Planning process. Once adopted, the administrative procedures may be amended from time to time, in writing, following approval of all of the Parties and their respective governing bodies if required. In the event of a conflict between this Agreement and the administrative procedures enacted under this Agreement, the provisions of this Agreement will govern.

e. Assignment. Except as otherwise provided in this Agreement, the rights and duties of the Parties may not be assigned or delegated without the written consent of all other Parties. Subject to the foregoing, this Agreement will inure to the benefit of, and be binding on, the successors and assigns of the Parties hereto. PCWA, Sacramento, and SCWA are in the process of forming a Joint Powers Authority (JPA) for the purpose of jointly carrying out the responsibilities and requirements of this Agreement. Assignment of this Agreement to that JPA is contemplated by all Parties at the time of execution of this Agreement. After formation of the JPA, the Administrating Agency may request, in writing, that the Parties approve assignment of this Agreement to that JPA.

8. Annual Budgets. As soon as practical after the execution of this Agreement, and thereafter at least thirty days prior to the commencement of each Fiscal Year, the Parties will adopt a Budget and designate each Party's annual contribution for the ensuing Fiscal Year which shall then be funded by the Parties within thirty days following Budget adoption by all Parties. Thereafter, the Administering Agency will be authorized to make expenditures on behalf of the Parties consistent with the approved Budget and any administrative procedures adopted under this Agreement. Personnel, equipment and/or property of one or more of the Parties may be provided in lieu of other contributions required under this Agreement, to the extent expressly approved by the Parties. With the exception of the agreed-upon cost sharing or in lieu contributions approved by all Parties and with the exception of staff time and resources of the Administrative Agency as set forth in Section 3.b, any internal, in- house, or administrative costs or expenses incurred by any Party related to that Party's obligations under this Agreement shall be the sole responsibility of that Party. The total annual Budget and the Parties' cost share for the future Fiscal Years will be determined on an annual basis and will reflect the work envisioned for that year. Historical fiscal

contributions from current and previous Parties are memorialized in Exhibit A.

9. Funds. The Administering Agency shall be the depository and shall have custody of all Funds received pursuant to this Agreement, from whatever source, subject to the applicable provisions of any funding contract providing for a trustee or other fiscal agent. All such Funds shall be maintained in separate accounts and shall not be commingled with funds of the Administering Agency, or any other person or entity. The Administering Agency shall have authority to disburse Funds received under this Agreement consistent with the terms of this Agreement and the adopted Budget, and shall report all receipts and disbursements to the Parties. Pursuant to Government Code section 6509.5, the Administering Agency will invest any moneys held for disbursement on behalf of the Parties in the same manner and on the same conditions as local agencies pursuant to Government Code section 53601.

10. Funding Agreements. With the consent of the Parties, the Administering Agency may enter into funding agreement(s) with state, federal, or other entities on behalf of the Parties, including those agreements that provide funds on a reimbursement claim basis. However, the liability for entering into said agreements will be shared amongst all Parties and not be the sole responsibility of the Administrating Agency. As agreed to by all Parties, the Administering Agency has entered into the following funding agreements:

a. Wildlife Conservation Board ("WCB") Streamflow Enhancement Grant Program. As the Administrating Agency, PCWA, executed funding agreement number WC-2376AH for the Streamflow Enhancement Grant Program on August 30, 2023.

- The Parties at the time of execution contributed to a total of $1,175,000 in local cost share match to WC-2376AH, as detailed in Exhibit A.
- The Parties acknowledge that the WCB will pay reimbursement claims on a quarterly basis throughout the term of the grant award.
- In order to maintain a positive cash flow to complete the scope of work under WC-2376AH, Sacramento and PCWA each contributed an additional "advance" of $1,000,000 to the depository of Funds (see Section 9) to cover expenditures until reimbursement claims are received. These advanced funds are in addition to the local cost share match, it is anticipated that these funds will be fully returned to Sacramento and PCWA through reimbursement via the WCB grant.
- If WCB does not provide all awarded funds or if the cost of the agreed-to scope of work under WC-2376AH exceeds the awarded funds, Sacramento and PCWA will equally share the additional cost burden.

11. Audits. The Administering Agency will provide an accounting of all Funds, and will report to the Parties all receipts and disbursements made pursuant to the adopted Budget and this Agreement, in accordance with the provisions of Government Code section 6505. If approved by the majority of the Parties, the Administering Agency shall have an annual audit of the accounts and records managed by the Administering Agency pursuant to this Agreement performed by a certified public accountant, and shall submit a report thereof to each of the Parties. Any costs of the audit, including contracts with and/or employment of certified public accountants pursuant to this section, will be considered Administrative Expenses.

12. Privileges and Immunities. All of the privileges and immunities from liability, exemptions from laws, ordinances and rules, all pension, relief, disability, worker's compensation and other benefits that apply to the activity of officers, agents or employees of any of the Parties when performing their respective functions will apply to them to the same degree and extent while engaged in the performance of any of the functions and other duties under this Agreement. It is further understood and agreed by the Parties that notwithstanding anything contained herein, the employees of each Party shall continue to be entirely and exclusively under the direction, supervision and control of the employing Party.

13. Allocation of Liabilities. The Parties expressly agree that the debts, liabilities and obligations of each Party shall remain the debts, liabilities and obligations of that Party and shall not be the debts, liabilities and obligations of the Administering Agency or any other Party.

14. Fidelity Bond. The Parties may require designated public officers of the Administering Agency who have charge of, handle, or have access to any Funds pursuant to this Agreement, to file an official bond in an amount to be fixed by the Parties. The premiums on any such fidelity bonds attributable to the coverage required herein will be Administrative Expenses.

15. Term. This Agreement will remain in full force and effect until terminated in writing by a majority vote of the Parties.

16. Disposition of Property Upon Termination. Upon termination of this Agreement, any surplus Funds, if any, on hand will be returned to the Parties in proportion to the contributions made by them except for any Funds obligated to pay for Project related expenses incurred prior to the date of termination.

17. Withdrawal of a Party. Any Party may withdraw from this Agreement effective upon thirty (30) day's written notice to all other Parties. The withdrawing Party and the Administering Agency, on behalf of the remaining Parties, shall execute an amendment to this Agreement memorializing the withdrawal. A withdrawing Party shall be responsible for its share of financial obligations incurred under this Agreement and the adopted Budget prior to the effective date of the withdrawal. If any surplus Funds remain at the end of the Fiscal Year in which the withdrawing Party withdrew and which

are in excess of any budget commitment existing as of the effective date of the withdrawal, such funds will be returned to the withdrawing Party in proportion to the contribution made by the withdrawing Party.

18. Notices. The time for providing any notices specified in this Agreement may be extended within the term of this Agreement with the consent of all of the Parties, confirmed in writing, without requiring an amendment to this Agreement. All notices and other communications required under this Agreement shall be in writing, and shall be deemed to have been duly given: (a) upon the date of service, if served personally on the Party to whom notice is to be given; (b) upon the date of service, if sent by electronic mail, and the Party to whom notice is to be given confirms receipt; or (c) on the third day after mailing, if mailed to the Party to whom notice is to be given by first-class mail, postage prepaid, and properly addressed to the designated representatives of the Party. Each Party shall promptly notify every other Party of approvals or any other actions taken by their respective governing boards concerning or related to this Agreement or the Project.

19. Signatories' Authority. The signatories to this Agreement represent that they have authority to execute this Agreement and to bind the Party on whose behalf they execute this Agreement.

20. Counterparts of this Agreement. This Agreement may be signed in any number of counterparts by the Parties, each of which will be deemed to be an original, and all of which together will be deemed to be one and the same instrument. This Agreement, if executed in counterparts, will be valid and binding on a Party as if fully executed all in one copy.

21. Reasonable Cooperation; No Agency. The Parties will reasonably cooperate with each other, including the execution of all necessary documents required to perform the obligations under this Agreement, and to carry out the purpose and intent of this Agreement; provided that each Party understands and agrees that there is no agency or joint venture relationship between the Parties, and no Party is authorized to act for or on behalf of any other Party except as expressly authorized under this Agreement.

22. Construction and Interpretation. This Agreement is entered into freely and voluntarily. This Agreement has been arrived at through negotiation, and each Party has had a full and fair opportunity to revise the terms of this Agreement. Consequently, the normal rule of construction that any ambiguities are to be resolved against the drafting party will not apply in construing or interpreting this Agreement.

23. Complete Agreement. This Agreement constitutes the sole, final, complete, exclusive and integrated expression and statement of the terms of this Agreement among the Parties concerning the subject matter, and supersedes all prior negotiations, representations or agreement, either oral or written, that may be related to the subject matter of this Agreement.

24. Waiver. The waiver at any time by a Party of its rights with respect to a default or other matter arising in connection with this Agreement will not be deemed a waiver with respect to any other default or matter.

25. California Law. This Agreement shall be interpreted and enforced according to the provisions of California Law, and the venue for any action to enforce the terms of this Agreement shall be either Placer or Sacramento County.

26. Severability. If any provision of this Agreement is held by a court of competent jurisdiction to be invalid, void or unenforceable, the remaining provisions will continue in full force and effect without being impaired or invalidated in any way, but only to the extent that the intent of the Parties can be effectuated without the provision or provisions held invalid, void, or unenforceable.

27. No Third Party Beneficiary. The parties understand and agree that this Agreement creates rights and obligations solely between the Parties and is not intended to benefit any other Party. No provision of this Agreement shall in any way inure to the benefit of any third person so as to constitute any such third-person as a third party beneficiary of this Agreement or any of its items of conditions, or otherwise give rise to any cause of action in any person not a party hereto.

The foregoing is hereby agreed to by the Parties.

IN WITNESS THEREOF, the Parties have executed this Agreement as of the dates written below.

[SIGNATURE PAGES TO FOLLOW]

CITY OF SACRAMENTO:

By:_____
Assistant City Manager

For: Howard Chan, City Manager

Approved as to Form:

Michael Vosa
_____
City Attorney

Attest:

_____
City Clerk

Placer County Water Agency

Robert Dugan, Chair of the Board
Placer County Water Agency

6/6/24
Date

ATTEST:

Lori Young
Clerk to the Board

Sacramento County Water Agency

Matt Satow, Agency Engineer
Sacramento County Water Agency

7/16/24
Date

EXHIBIT A – HISTORICAL FISCAL CONTRIBUTIONS SUMMARY

EXHIBIT A
HISTORICAL FISCAL CONTRIBUTIONS SUMMARY

RiverArc Project Party[1]	Fiscal Year 2016/17 to 2023/24 Contributions[2,3]	Additional WCB Grant Cost Share Match	Total[4,5]
Placer County Water Agency (PCWA)	$ 712,500.00	$ 200,000.00	$ 912,500.00
City of Sacramento (Sacramento)	$ 712,500.00	$ 200,000.00	$ 912,500.00
Sacramento County Water Agency (SCWA)	$ 712,500.00	-	$ 712,500.00
California American Water (CalAm)	$ 654,199.10	$ 75,000.00	$ 729,199.10
City of Roseville	$ 88,223.00	-	$ 88,223.00
Rio Linda/Elverta Community Water District	$ 86,012.00	-	$ 86,012.00
TOTAL CONTRIBUTIONS	**$ 2,965,934.10**	**$ 475,000.00**	**$ 3,440,934.10**

Notes:

1. Reflects all current and previous Parties per Memorandum of Agreement (MOA) Amendments 1, 2, and 3.
2. Amounts shown are reflective of any surplus funds that were returned to the withdrawing Party at the time of withdrawal.
3. Amounts shown are reflective of Parties' (PCWA, Sacramento, SCWA, and CalAm) equal share of partnership contributions totaling, $700,000, to the Wildlife Conservation Board's (WCB) Streamflow Enhancement Grant Program local cost share requirement.
4. Amounts are not reflective of "Administrative Expenses" incurred by the Administering Agency under the terms of Section 3.b of the MOA, which includes but are not limited to, expenses incurred in utilizing staff time and resources of the Administering Agency.
5. Amounts are not reflective of any internal, in- house, or administrative costs or expenses incurred by any Party related to that Party's obligations under Section 7 and 8 of the MOA. Those costs or expenses are the sole responsibility of that Party.

COUNCIL COMMUNICATION

CC #: 3493
File #: 0800-03

Title:	California Greenhouse Gas Cap-and-Trade Program - 2025 Directly Allocated Allowance Allocation
Contact:	Long Zhang 916-774-5652 lzhang@roseville.ca.us

Meeting Date: 8/21/2024
Item #: 7.15.

RECOMMENDATION TO COUNCIL

Staff recommends that the City Council adopt a resolution directing 100% of the City's 2025 Greenhouse Gas (GHG) allowances to the Compliance account for future compliance obligations, with no allowances allocated to the Auction account.

BACKGROUND

As an electric distribution utility, the City annually receives an allocation of GHG allowances from the State of California under the Cap-and-Trade program. These allowances can be utilized for compliance purposes or consigned for auction. The City is required to designate how to distribute the allowances between its Compliance account and Auction account:

- Allowances placed in the Compliance account must be utilized to meet the City's emission obligation, which includes emissions from the Roseville Energy Park (REP) and out-of-state electricity imports.

- Allowances placed in the Auction account must be consigned to the quarterly auctions, with the City receiving the proceeds subject to specific spending restrictions.

The City of Roseville is expected to receive up to 319,452 allowances for 2025, less an adjustment of about 2% (or about 6,000 allowances) due to its participation in the Energy Imbalance Market (EIM). This 2% is estimated based on historical data, and the State will inform Roseville the exact amount by the end of August.

The recommendation to allocate all 2025 GHG allowances to the Compliance account is primarily driven by regulatory uncertainties. The State of California is expected to implement more stringent Cap-and-Trade regulations by the end of 2024, effectively starting in 2025. Key proposed changes include forced consignment and allowance reduction. If these changes materialize, they could potentially lead to a reduction in the number of allowances allocated to the City, an increase in future allowance prices, and restrictions on the City's ability to bank new allowances in its Compliance account. In addition, since entering the Energy Imbalance Market (EIM) in 2021,

there has been an increase in REP operations, driving a higher demand for allowances.

By banking all of the 2025 GHG allowances, the City can more effectively manage its compliance obligations in light of anticipated regulatory changes and increased operational demand. Staff will continue to monitor the regulatory and market developments closely, reassessing the allocation of allowances annually to ensure alignment with the latest regulatory and market conditions.

FISCAL IMPACT

There is no direct fiscal impact associated with the GHG allowance allocation. The allowances, valued at approximately $11 million, will be used to offset future GHG compliance costs.

ENVIRONMENTAL REVIEW

The California Environmental Quality Act (CEQA) does not apply to activities that will not result in a direct or reasonably foreseeable indirect physical change in the environment or is otherwise not considered a project as defined by CEQA Statute §21065 and CEQA State Guidelines §15060(c)(3) and §15378. Approval of the 2025 GHG Allowance Allocation meets the above criteria and is not subject to CEQA. No additional environmental review is required.

CITY COUNCIL STRATEGIC PLAN/OVERARCHING GOALS

Goal A - Remain fiscally responsible in a changing world
Goal F - Invest in well-planned infrastructure and growth

Respectfully Submitted,

Long Zhang, Electric Business Analyst

Daniel Beans, Electric Utility Director

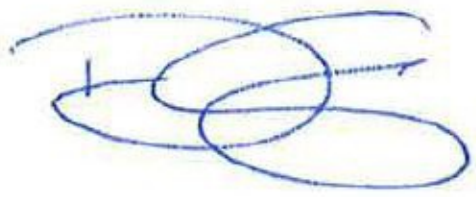

_____
Dominick Casey, City Manager

ATTACHMENTS:

Description

Resolution 24-293

RESOLUTION NO. 24-293

APPROVING 100% OF THE ALLOCATION OF CITY'S 2025 GREENHOUSE GAS CAP-AND-TRADE PROGRAM ALLOWANCES

WHEREAS, the City Council approved the Roseville Greenhouse Gas Cap-and-Trade Program in August 2012 and updated said program in February 2013; and

WHEREAS, this program defines how Roseville Electric will use the emission allowances it receives from the State each year; and

WHEREAS, each year the City is required to designate how to distribute the allowances between its Compliance account and Auction account; and

WHEREAS, the City's 2025 allocation of Greenhouse Gas Cap-and-Trade Program allowances is 319,452, less an adjustment of about 2%; and

WHEREAS, staff recommends 100% of the City's 2025 Greenhouse Gas (GHG) allowances be allocated to the Compliance account.

NOW, THEREFORE, BE IT RESOLVED by the City Council of the City of Roseville that it hereby approves 100% of the City's 2025 Greenhouse Gas (GHG) allowances be allocated to the Compliance account.

PASSED AND ADOPTED by the Council of the City of Roseville this____day of _____, 20_, by the following vote on roll call:

AYES COUNCILMEMBERS:

NOES COUNCILMEMBERS:

ABSENT COUNCILMEMBERS:

_____
MAYOR

ATTEST:

_____
City Clerk

COUNCIL COMMUNICATION

CC #: 3501
File #: 0709

Title:	HOME Investment Partnerships Program - Revised Resolution
Contact:	Trisha Isom 916-746-1239 tisom@roseville.ca.us Sara Thornton-Garcia 916-774-5295 srthornton@roseville.ca.us

Meeting Date: 8/21/2024
Item #: 7.16.

RECOMMENDATION TO COUNCIL

Staff recommends that the City Council adopt a revised resolution authorizing the Mayor to complete an application with the California State Department of Housing and Community Development for the HOME Investment Partnerships Program for funding in the amount of $1,500,000; and if awarded, the execution of a standard agreement and other related documents necessary to participate and comply with the HOME Investment Partnerships Program to issue a loan to Advocates for Mentally Ill Housing, Inc. (AMI Housing) for rehabilitation of Sun Rose Apartments, a Project Homekey permanent supportive housing site in the City of Roseville.

BACKGROUND

The HOME Program was created under Title II (the HOME Investment Partnerships Act) of the National Affordable Housing Act of 1990. The objectives and intent of the HOME Program are to provide decent affordable housing to lower-income households; strengthen the ability of state and local governments to provide housing; expand the capacity of non-profit housing providers; and leverage private sector participation. In addition, Congress intended the HOME program to operate in a way that will help the participating jurisdiction undertake its own affordable housing strategy. HOME program regulations are available at 24 CFR §92.

HOME Program funds are federal funds allocated by the California Department of Housing and Community Development (HCD) to qualifying entities and are to be used for projects that meet the criteria listed above. The City of Roseville has approximately $2 million in HOME Program Income (PI) funds which is generated by First-Time Home Buyer and Owner Occupied Rehabilitation loan payoffs funded using HOME program dollars.

On June 21, 2023, City Council approved an application to the Department of Housing and Community Development (HCD) to loan $1,500,000 of HOME Investment Partnerships Program (HOME) Program Income to Advocates for Mentally Ill Housing, Inc. (AMI Housing) to complete rehabilitation of housing units at Sun Rose Apartments. Additionally, City Council authorized the City Manager to execute a standard agreement and other related documents necessary to participate and comply with the HOME Investment Partnerships Program.

Over the last year, Housing Division staff has been working with HCD through the application process to receive the necessary approvals to loan HOME Program Income funds to AMI Housing. HCD is requesting a revised resolution, which will require the Mayor of Roseville to execute HCD's Standard Agreement and other required documents despite the City's charter status and the City Manager's authority to execute documents. Once HCD approves the City's applications, staff will bring forward the necessary loan and regulatory agreement documents required for development of the project for Council review and consideration.

FISCAL IMPACT

The City's HOME program income is generated by First-Time Home Buyer and Owner Occupied Rehabilitation loan payoffs that are funded using HOME dollars. Given the rise in housing costs and purchase prices, HOME funding has been increasingly difficult to disburse under these programs. Expending $1,500,000 in one tranche would demonstrate the City's ability to expend program income and meet our agreement terms with HUD and HCD. No General Fund resources will be used.

ENVIRONMENTAL REVIEW

The California Environmental Quality Act (CEQA) only applies to projects which have the potential to cause a significant effect on the environment. Where it can be seen with certainty that there is no possibility that the activity in question may have a significant effect on the environment, the activity is not subject to CEQA. (CEQA Guidelines §15061(b)(3)).

The National Environmental Policy Act (NEPA) requires federal agencies to assess the environmental effects of proposed major federal actions prior to making decisions. This HOME PI application required a full Environmental Assessment (EA) and approval from HCD. The HOME PI EA application was approved by HCD.

CITY COUNCIL STRATEGIC PLAN/OVERARCHING GOALS

Goal C - Maintain a safe and healthy community

Respectfully Submitted,

Sara Thornton-Garcia, Housing Analyst

Melissa Anguiano, Economic Development Director

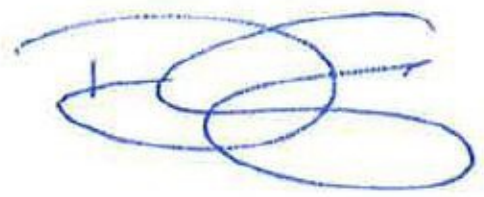

Dominick Casey, City Manager

ATTACHMENTS:

Description

Resolution 24-299

RESOLUTION NO. 24-299

AUTHORIZING THE SUBMISSION OF THE HOME INVESTMENT PARTNERSHIPS PROGRAM APPLICATION TO THE CALIFORNIA STATE DEPARTMENT OF HOUSING AND COMMUNITY DEVELOPMENT, AND AUTHORIZING THE MAYOR TO EXECUTE IT AND ANY RELATED DOCUMENTS NECESSARY TO PARTICIPATE AND COMPLY WITH THE PROGRAM ON BEHALF OF THE CITY OF ROSEVILLE

WHEREAS:

A. The California Department of Housing and Community Development (the "Department") is authorized to allocate HOME Investment Partnerships Program ("HOME") funds made available from the U.S. Department of Housing and Urban Development ("HUD"). HOME funds are to be used for the purposes set forth in Title II of the Cranston-Gonzalez National Affordable Housing Act of 1990, in federal implementing regulations set forth in Title 24 of the Code of Federal Regulations, part 92, and in Title 25 of the California Code of Regulations commencing with section 8200.

B. On January 29, 2024, the Department issued a Notice of Funding Availability announcing the availability of funds under the HOME program (the "NOFA").

C. In response to the 2022-2023 HOME NOFA, the City of Roseville, a local government (the "Applicant"), wishes to apply to the Department for, and receive an allocation of HOME funds.

THEREFORE, IT IS RESOLVED THAT:

1. In response to the HOME NOFA, the Applicant shall submit an application to the Department to participate in the HOME program and for an allocation of funds not to exceed one million, five hundred thousand dollars ($1,500,000) for the following activities and/or programs:

   Sun Rose Apartments is an 83-unit permanent housing site for persons experiencing homelessness and youth experiencing homelessness or are at risk of homelessness. Units will be renovated to be more suitable for more permanent, long-term living conditions. Supportive services will be provided onsite for residents. The HOME PI money will be used as gap financing for rehabilitation of the housing site to be located at 110 N. Sunrise Boulevard, Roseville, CA 95661.

2. If the application for funding is approved, then the Applicant hereby agrees to use the HOME funds for eligible activities in the manner presented in its application as approved by the Department in accordance with the statutes and regulations cited above. The Applicant may also execute a standard agreement, any amendments thereto, and any and all other documents or instruments necessary or required by the

Department or HUD for participation in the HOME program (collectively, the required documents).

3. The applicant authorizes the Mayor of the City of Roseville, or their designee, to execute, in the name of the applicant, the HOME Standard Agreement.

4. The applicant authorizes the Mayor of the City of Roseville, or their designee, to execute, in the name of the applicant, all other required documents.

PASSED AND ADOPTED by the Council of the City of Roseville this____day of _____, 2024, by the following vote on roll call:

AYES COUNCILMEMBERS:

NOES COUNCILMEMBERS:

ABSENT COUNCILMEMBERS:

_____
MAYOR

_____
City Clerk

COUNCIL COMMUNICATION

CC #: 3481
File #: 0704-01 & 0201-01

Title: C-63 Neighborhood Park – Budget Adjustment
Contact: Tara Gee 915-774-5253 tgee@roseville.ca.us

Meeting Date: 8/21/2024
Item #: 7.17.

RECOMMENDATION TO COUNCIL

Staff recommends that the City Council adopt an ordinance to approve a budget adjustment allocating $1,040,000 from the Creekview Neighborhood Park Fund for the C-63 Neighborhood Park Project.

BACKGROUND

The C-63 Neighborhood Park Project was established as a Capital Improvement Project in FY2023-24. Design and construction document preparation of the park site are underway. This budget adjustment seeks Council approval to add $1,040,000 to the project for the construction portion of the park, increasing the total project budget to $1,200,000.

FISCAL IMPACT

The recommended budget adjustment of $1,040,000 in the Creekview Neighborhood Park Fund is for the construction phase for the C-63 Neighborhood Park Project. Maintenance for the park will be funded by Creekview Community Facilities District No. 2 (Public Services). There will be no General Fund impact.

ENVIRONMENTAL REVIEW

The California Environmental Quality Act (CEQA) does not apply to activities that will not result in a direct or reasonably foreseeable indirect physical change in the environment, or is otherwise not considered a project as defined by CEQA Statute §21065 and CEQA State Guidelines §15060(c)(3) and §15378. Approval of a budget adjustment meets the above criteria and is not subject to CEQA. No additional environmental review is required.

CITY COUNCIL STRATEGIC PLAN/OVERARCHING GOALS

Goal A - Remain fiscally responsible in a changing world

Goal E - Deliver exceptional city services
Goal F - Invest in well-planned infrastructure and growth

Respectfully Submitted,

Tara Gee, Park Planning & Development Manager

Jill Geller, Parks, Recreation & Libraries Director

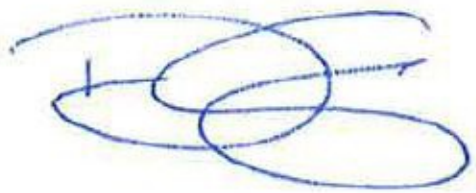

_____
Dominick Casey, City Manager

ATTACHMENTS:

Description

C-63 Vicinity Map

Ordinance 6850

Vicinity Map

C-63 Park Site

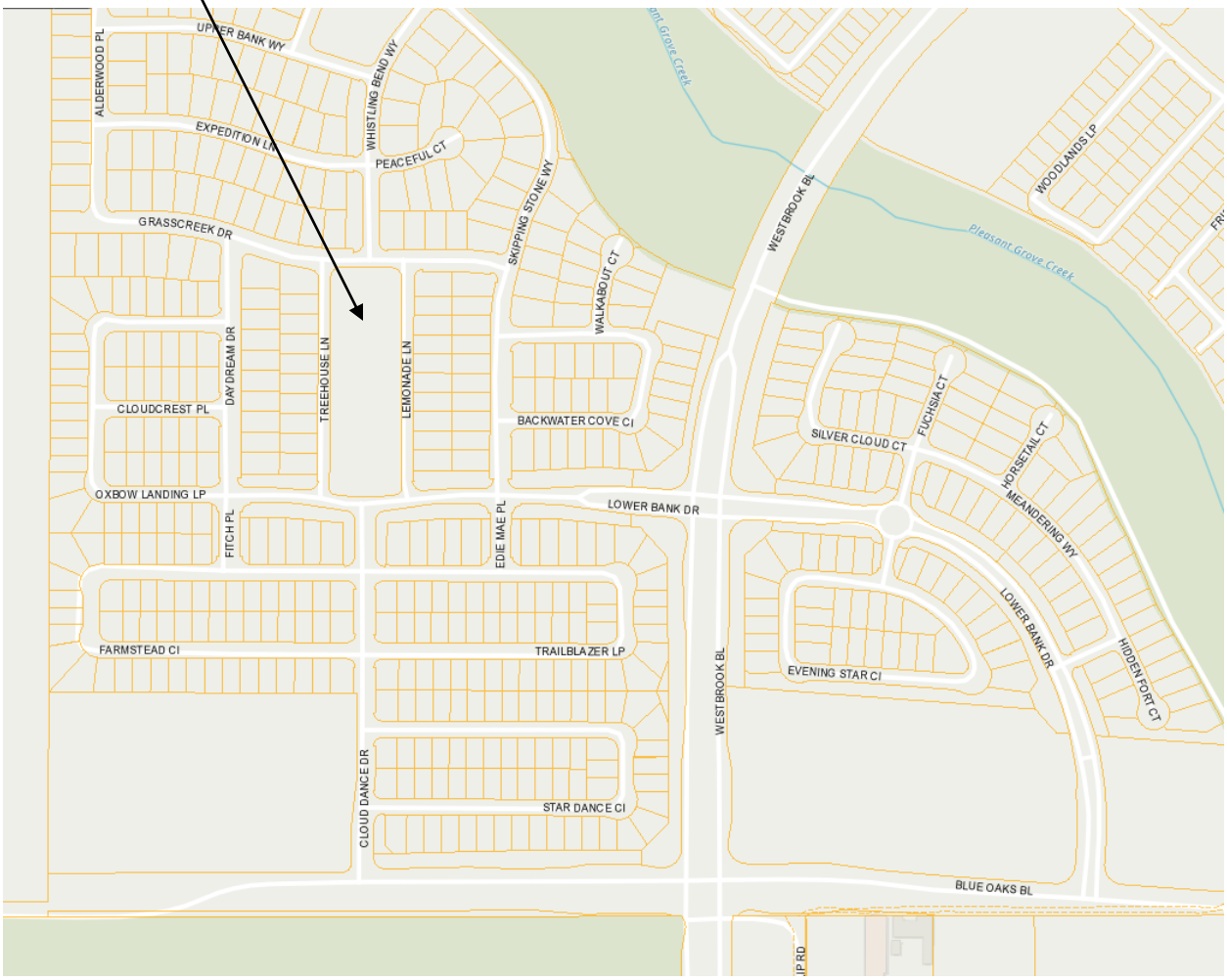

ORDINANCE NO. 6850

ORDINANCE OF THE COUNCIL OF THE CITY OF ROSEVILLE AUTHORIZING CERTAIN AMENDMENTS TO THE FISCAL YEAR 2024-25 BUDGET AND DECLARING THIS ORDINANCE TO BE IMMEDIATELY EFFECTIVE AS AN APPROPRIATION MEASURE

THE CITY OF ROSEVILLE ORDAINS:

SECTION 1. The City of Roseville Annual Budget, Fiscal Year 2024-25, is hereby amended as listed on the attached budget adjustment for the C-63 Neighborhood Park project.

SECTION 2. This ordinance is hereby declared to be an appropriation measure, immediately effective pursuant to the provisions of Section 5.03 of the Charter.

SECTION 3. The City Clerk is hereby authorized and directed to post a true copy of the foregoing ordinance in each of three (3) conspicuous locations in the City and she shall immediately after such posting enter in the ordinance book, under the record of the ordinance, a certificate under her hand stating the time and place of such publication by posting.

PASSED AND ADOPTED by the Council of the City of Roseville, this _____day of_____, 2024, by the following vote on roll call:

AYES COUNCILMEMBERS:

NOES COUNCILMEMBERS:

ABSENT COUNCILMEMBERS:

_____
MAYOR

ATTEST:

_____
City Clerk

REQUEST FOR BUDGET ADJUSTMENT

Updated 5/24/2024

REQUESTER NAME & TITLE:	Tara Gee, Park Planning & Development Manager	FISCAL YEAR:	2024-25
PREPARER NAME & TITLE:	Anita Kwong, Management Analyst	COUNCIL DATE (if applicable):	08/21/24
DEPARTMENT/DIVISION:	Parks, Recreation, and Libraries	ORDINANCE:	

EXPENDITURES/EXPENSES/TRANSFERS OUT

ACCOUNT STRING				BUDGET ($)	DESCRIPTION
Fund	Account	Center	Project	Adjustment	
3322	6587	84001	500351	1,040,000	Increase to project budget - C-63 Neighborhood Park
EXPENDITURES/EXPENSES/TRANSFERS OUT TOTAL				1,040,000	

REVENUES/TRANSFERS IN

ACCOUNT STRING				BUDGET ($)	DESCRIPTION
Fund	Account	Center	Project	Adjustment	
REVENUES/TRANSFERS IN TOTAL				-	

NET ADJUSTMENT	1,040,000	

FUND BALANCE

ACCOUNT STRING				BUDGET ($)	DESCRIPTION
Fund	Account	Center	Project	Adjustment	
3322	3601	00000	000000	(1,040,000)	Reduce available resources in Neighborhood Park - Creekview
	3601	00000	000000		
	3601	00000	000000		
	3601	00000	000000		
	3601	00000	000000		
	3601	00000	000000		
FUND BALANCE TOTAL				(1,040,000)	

Justification for Budget Adjustment:

The Parks, Recreation & Libraries Department is requesting a budget adjustment to increase project 500351 C-63 Neighborhood Park in the amount of $1,040,000, increasing the total project budget to $1,200,000. Funding is from the neighborhood park permit fees collected for the Creekview Specific Plan (fund 3322). The increased budget for the C-63 Neighborhood Park project will fund the park construction. The Neighborhood Park - Creekview Fund (3322) has appropriate available resources to fund this request. There is no impact on the General Fund.

COUNCIL COMMUNICATION

CC #: 3494
File #: 0900-04 & 0201-01

Title:	Fire Station #3 Building Assessment Project - Capital Improvement Project Approval and Budget Adjustment
Contact:	Lori Crittenden 916-774-5707 lcrittenden@roseville.ca.us

Meeting Date: 8/21/2024
Item #: 7.18.

RECOMMENDATION TO COUNCIL

Staff recommends that the City Council authorize the establishment of a new Capital Improvement Project, Fire Station #3 Building Assessment Project, and adopt an ordinance to approve a budget adjustment for the Fire Station #3 Building Assessment.

BACKGROUND

Fire Station #3 located at 1300 Cirby Way was built in 1963 and had a minor remodel performed in the early 1990s. In Fiscal Year 2023-24, a project was created for the Fire Station #3 Dorm Restroom Improvements. The Fire Department, in collaboration with Public Works, concluded that focusing solely on restroom upgrades is impractical due to additional findings while developing the scope of work. A comprehensive assessment of the station's needs is deemed necessary, and a new project is being requested to undertake this evaluation.

The building assessment will be conducted to determine current condition, accessibility issues, and long-term usability. The report will assist the city in determining the feasibility of remodeling the existing building or constructing a new building.

Deliverables will include the following:

- Assessment of future Fire Department needs and improvements needed to meet current American with Disabilities Act (ADA) accessibility design compliance,
- Recommendations to improve the functionality of Fire Station #3 and extend the useful life of the building,
- A master site plan to facilitate the overall usability of the existing site,
- Architectural renderings and engineered building plans,
- Rough order of magnitude (ROM) budgetary cost estimate.

FISCAL IMPACT

The recommended budget adjustment of $312,092 will be funded by the closure of the existing Fire Station #3 Dorm Room Improvements project. That project was originally funded by the Facility Rehabilitation Fund, which receives its funding from the General Fund. The budget adjustment will also release $34,677 back to the General Fund. The building assessment will be conducted to determine current condition, accessibility issues, and long-term usability and will have no new impact to the Facility Rehabilitation Fund.

ENVIRONMENTAL REVIEW

The California Environmental Quality Act (CEQA) does not apply to feasibility and planning studies for possible future actions which the agency has not approved or funded (CEQA Guidelines §15262). Because the Fire Station #3 Building Assessment Budget Adjustment only authorizes funding for an comprehensive assessment of Fire Station #3's current condition, accessibility issues, and long-term usability in order to determine whether it can be renovated or needs to be reconstructed to meet the Fire Department's needs, it is statutorily exempt from CEQA review. Following completion of the study the City will refine the project proposal and conduct CEQA review prior to project approval.

CITY COUNCIL STRATEGIC PLAN/OVERARCHING GOALS

Goal E - Deliver exceptional city services
Goal F - Invest in well-planned infrastructure and growth

Respectfully Submitted,

Lori Crittenden, Project Coordinator

Jason Shykowski, Public Works Director

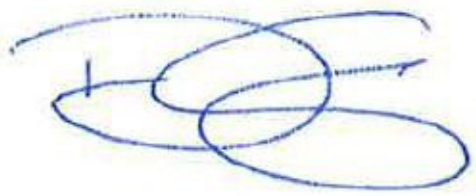

_____
Dominick Casey, City Manager

ATTACHMENTS:
Description
Ordinance 6851

ORDINANCE NO. 6851

ORDINANCE OF THE COUNCIL OF THE CITY OF ROSEVILLE AUTHORIZING CERTAIN AMENDMENTS TO THE FISCAL YEAR 2024-25 BUDGET AND DECLARING THIS ORDINANCE TO BE IMMEDIATELY EFFECTIVE AS AN APPROPRIATION MEASURE

THE CITY OF ROSEVILLE ORDAINS:

SECTION 1. The City of Roseville Annual Budget, Fiscal Year 2024-25, is hereby amended as listed on the attached budget adjustment for the Fire Station #3 Building Assessment project.

SECTION 2. This ordinance is hereby declared to be an appropriation measure, immediately effective pursuant to the provisions of Section 5.03 of the Charter.

SECTION 3. The City Clerk is hereby authorized and directed to post a true copy of the foregoing ordinance in each of three (3) conspicuous locations in the City and she shall immediately after such posting enter in the ordinance book, under the record of the ordinance, a certificate under her hand stating the time and place of such publication by posting.

PASSED AND ADOPTED by the Council of the City of Roseville, this _____day of_____, 2024, by the following vote on roll call:

AYES COUNCILMEMBERS:

NOES COUNCILMEMBERS:

ABSENT COUNCILMEMBERS:

_____
MAYOR

ATTEST:

_____
City Clerk

REQUEST FOR BUDGET ADJUSTMENT

Updated 5/24/2024

REQUESTER NAME & TITLE:	Dan Allen, Facilities Director	FISCAL YEAR:	2024-25
PREPARER NAME & TITLE:	Daniel Leonardich, Management Analyst II	COUNCIL DATE (if applicable):	08/21/24
DEPARTMENT/DIVISION:	Public Works	ORDINANCE:	

EXPENDITURES/EXPENSES/TRANSFERS OUT

ACCOUNT STRING				BUDGET ($)	DESCRIPTION
Fund	Account	Center	Project	Adjustment	
1001	6587	84001	500366	(34,677)	Reduce budget due to project 500366 cancellation
4065	6587	84001	500366	(312,092)	Reduce budget due to project 500366 cancellation
4065	5301	84001	500540	287,122	Establish budget for project 500540
4065	5080	84001	500540	24,970	Establish budget for project 500540
EXPENDITURES/EXPENSES/TRANSFERS OUT TOTAL				(34,677)	

REVENUES/TRANSFERS IN

ACCOUNT STRING				BUDGET ($)	DESCRIPTION
Fund	Account	Center	Project	Adjustment	
REVENUES/TRANSFERS IN TOTAL				-	

NET ADJUSTMENT	(34,677)	

FUND BALANCE

ACCOUNT STRING				BUDGET ($)	DESCRIPTION
Fund	Account	Center	Project	Adjustment	
1001	3601	00000	000000	34,677	Increase General Fund Balance
	3601	00000	000000		
	3601	00000	000000		
	3601	00000	000000		
	3601	00000	000000		
	3601	00000	000000		
FUND BALANCE TOTAL				34,677	

Justification for Budget Adjustment:

Staff recommends that Council authorize the establishment of a new Capital Improvement Project – Fire Station #3 Building Assessment Project (#500540), and adopt an ordinance to approve a budget adjustment appropriating $312,092 in the Facilities Rehabilitation Fund.

The Fire Station No. 3 Dorm Restroom Improvements Project (#500366) is being cancelled. The Fire Department and Public Works determined that a more comprehensive assessment of the station's needs is necessary.

This budget adjustment reduces the Fire Station No. 3 Dorm Restroom Improvements Project (#500366) to $0, and reprograms the remaining Facility Rehabilitation Fund budget for that project ($312,092) to establish the new Fire Station #3 Building Assessment Project (#500540). This action will also release $34,677 back to the General Fund.

COUNCIL COMMUNICATION

CC #: 3506
File #: 0323 & 0324 & 0214 & 0201-01

Title:	Public Safety 2023 Homeland Security Grant Program - Capital Improvement Projects Approval, Grant Awards, and Budget Adjustments
Contact:	Eric Sanchez 916-774-5400 esanchez@roseville.ca.us

Meeting Date: 8/21/2024
Item #: 7.19.

RECOMMENDATION TO COUNCIL

Staff recommend that the City Council authorize the establishment of two new Capital Improvement Projects, the FY2023 Homeland Security Grant Program - Fire and the FY2023 Homeland Security Grant Program - Police.

In addition, staff recommends that the City Council adopt resolutions for the acceptance of two awards, contract numbers 2023-0042-071 and 2023-0042-072, from the 2023 Department of Homeland Security Grant Program as a sub-grantee through the Placer County Office of Emergency Services in a combined amount of $124,545 and authorize the City Manager to execute any required documents for these awards.

Staff also requests that the City Council adopt two ordinances approving budget adjustments increasing appropriations for the grant awards in the Grants Fund for the Projects.

BACKGROUND

Congress, through the Department of Homeland Security, periodically allocates funds for local security and preparedness needs. Sometimes the allocations are based on population and sometimes they are based on identified local risks. The funds are distributed to the states and the states distribute them to the counties, then the counties prioritize, administer, file claims, and distribute reimbursements for the grants. Placer County's Office of Emergency Services (PCOES) has awarded the City of Roseville as a sub-grantee from the 2023 Department of Homeland Security Grant Program a combined $124,545 in total grant awards.

The Roseville Fire Department was awarded a total of $78,065 with subaward contract 2023-0042-0071 to purchase a $68,065 Raman chemical detector and $10,000 to replace a railcar emergency response kit for the department's Type I Hazardous Materials Team.

The Roseville Police Department was awarded a total of $46,480 with subaward contract 2023-0042-0072 to purchase $5,490 in magnified optics equipment for the Rapid Containment Team,

$2,990 in tactical medicine training for the Tactical Medicine Program, and $38,000 in night vision/virtual reality (VR) equipment for Special Weapons And Tactics (SWAT) team members.

FISCAL IMPACT

The total cost is estimated to be $124,545 and will be reimbursed through an equivalent grant award with no City share of the costs. Maintenance costs for the new equipment are expected to be equivalent to the maintenance costs of the equipment being replaced and is included in the departments' existing budgets in the General Fund. There is no net effect on the General Fund. Both departments will continue to seek grants to replace this type of equipment as technology improves and the equipment reaches its end of life.

ENVIRONMENTAL REVIEW

The California Environmental Quality Act (CEQA) does not apply to activities that will not result in a direct or reasonably foreseeable indirect physical change in the environment, or is otherwise not considered a project as defined by CEQA Statute §21065 and CEQA State Guidelines §15060(c)(3) and §15378. The Public Safety 2023 Homeland Security Grant Program Award and Budget Adjustments meets the above criteria and are not subject to CEQA. No additional environmental review is required.

CITY COUNCIL STRATEGIC PLAN/OVERARCHING GOALS

Goal A - Remain fiscally responsible in a changing world
Goal C - Maintain a safe and healthy community

Respectfully Submitted,

Eric Sanchez, Battalion Chief

Rick Bartee, Fire Chief

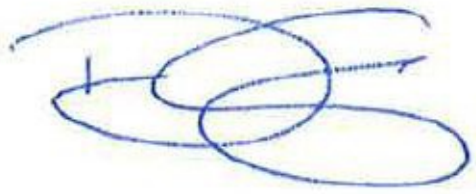

_____
Dominick Casey, City Manager

ATTACHMENTS:

Description

Resolution 24-303

2023-0042-071 OES - Roseville FD Project Subaward Agreement

2023-0042-071 Exhibit A - HSGP FY23 Award Letter Roseville Fire Department

2023-0042-071 Exhibit B - FY-2023-HSGP-Standard-Assurances

2023-0042-071 Exhibit C - HSGP GBR 2022 06.21.22 Signed Resolution 2022-128

Ordinance 6857

Resolution 24-304

2023-0042-072 PCOES - DHS Roseville PD Subaward Agreement

2023-0042-072 Exhibit A - HSGP FY23 Award Letter Roseville PD

2023-0042-072 Exhibit B - FY-2023-HSGP-Standard-Assurances

2023-0042-072 Exhibit C - HSGP GBR 2022 06.21.22 Signed Resolution 2022-128

Ordinance 6858

RESOLUTION NO. 24-303

ACCEPTING A GRANT AWARD FROM
THE UNITED STATES DEPARTMENT OF HOMELAND SECURITY

WHEREAS, the City of Roseville Fire Department received $78,065 in grant funds from the United States Department of Homeland Security, as a sub-grantee through the Placer County Office of Emergency Services (subaward contract 2023-0042-0071), for the purchase of Type I Hazardous Materials Team, a $68,065 raman chemical detector and $10,000 to replace a railcar emergency response kit.

NOW, THEREFORE, BE IT RESOLVED by the City Council of the City of Roseville that the City of Roseville accepts the grant award from the United States Department of Homeland Security, and the City Manager is hereby authorized to execute any required documents.

BE IT FURTHER RESOLVED that as the grant recipient, the City of Roseville agrees to comply with all conditions and requirements related to the award.

PASSED AND ADOPTED by the Council of the City of Roseville this____day of _____, 2024, by the following vote on roll call:

AYES COUNCILMEMBERS:

NOES COUNCILMEMBERS:

ABSENT COUNCILMEMBERS:

_____
MAYOR

ATTEST:

_____
City Clerk

DEPARTMENT OF HOMELAND SECURITY

SUBAWARDEE GRANT AGREEMENT

CONTRACT NO: 2023-0042-071
DEPARTMENT: Office of Emergency Services
SUBAWARDEE: City of Roseville
SUBAWARDEE UEI #: W49TKZLUYCJ3

GRANT INFORMATION:

Fiscal Year (FY) 2023 Homeland Security Grant Program (HSGP) Subaward #2023-0042
Subaward Period: 09/01/2023 – 05/31/2026
Federal Grantor Agency – US Department of Homeland Security CFDA #97.067
Pass-through State Agency – California Office of Emergency Services
FIPS #061-00000, Subaward #2023-0042

This Agreement is entered into as of the date last signed below ("Effective Date") between the County of Placer, a political subdivision of the State of California (hereinafter "County") City of Roseville (hereinafter "SUBAWARDEE", collectively "Parties").

WHEREAS, County has been designated as the pass-through agent for the local administration of the State Homeland Security Grant Program ("SHSGP") which consists of federally awarded funds from the Federal Emergency Management Agency ("FEMA") through the California Governor's Office of Emergency Services ("CalOES"); and

WHEREAS, SUBAWARDEE submitted an application to County for an award of a portion of the SHSGP that has been awarded to County; and

WHEREAS, County has approved SUBAWARDEE's application for such grant funds conditioned on SUBAWARDEE's approval and execution of this Agreement; and

WHEREAS, the purpose of this Agreement is to memorialize SUBAWARDEE's legal obligations with respect to its use of the grant funds and its compliance with the terms and conditions of the SHSGP; and

WHEREAS, pursuant to Placer County Board of Supervisors Resolution No. 2022-128 (current HSGP GBR) dated June 21, 2022, which is attached hereto and incorporated herein as Exhibit C, the Assistant Director of the Placer County Office of Emergency Services ("PlacerOES") has been authorized to execute this Agreement on behalf of County; and

WHEREAS, County and SUBAWARDEE desire to enter into this Agreement on the terms and conditions set forth herein.

NOW, THEREFORE, in consideration of the mutual promises hereinafter set forth, County and SUBAWARDEE agree as follows:

1. **GRANT FUNDS & GRANT ACTIVITIES**. SUBAWARDEE will utilize 2023 State Homeland Security Grant Program (SHSGP) grant funds ("Grant Funds") only in the amount, type, and manner described in Exhibit A ("Scope of Grant Activities"). SUBAWARDEE will complete the tasks and/or activities in Exhibit A ("Grant Activities") within the term of this Agreement.

2. TERM OF AGREEMENT. This Agreement commences on the last date of execution of this Agreement and shall terminate on December 31, 2025 (December of year prior to closeout date).

3. SHSGP OBLIGATIONS.

A. Federal and State Requirements. The state and federal grant award requirements are provided in Exhibit B ("CalOES Standard Assurances"). SUBAWARDEE shall abide by all requirements therein, including:

i. The Department of Homeland Security Standard Terms and Conditions referenced therein.

ii. The requirement to provide proof in the form of a duly adopted resolution of the SUBAWARDEE's governing body supporting the application and the proposed Grant Activities and identifying the individual who is authorized to execute this Agreement, which shall be provided as Exhibit D to this Agreement.

iii. The requirement to adhere to government cost principles, uniform administrative requirements, and audit requirements provided in 2 CFR 200, as they may be updated from time to time by the federal Office of Management and Budget.

iv. The requirement to adhere to all applicable federal regulations; the FEMA Notice of Funding Opportunity ("NOFO"); the FEMA Preparedness Grants Manual; the California Supplement to the NOFO; and federal and state grant program guidelines.

v. The audit and access to records provisions, which require SUBAWARDEE to provide County, the Comptroller General of the Unities States, and, if appropriate, the state, with access to all records related to the Grant Funds.

B. Procurement. SUBAWARDEE's systems for acquiring goods and services under this Agreement shall comply with applicable federal regulations. All contracts awarded by SUBAWARDEE related to this Agreement, including but not limited to those in amounts less than the simplified acquisition threshold, shall contain the provisions set forth in 2 CFR 200, as applicable.

C. Use of Grant Funds for Fee or Profit Prohibited. The use of Grant Funds for the payment of any fee or profit under a sub-award, as defined in 2 CFR 200 subpart A–E, is not allowable. The term sub-award does not include the SUBAWARDEE's procurement of goods and services needed to carry out Grant Activities.

D. Post-Award Requirements. SUBAWARDEE shall meet all closeout and continuing responsibilities, such as equipment tracking, monitoring, auditing, and records retention pursuant to the requirements in Exhibit B. SUBAWARDEE expressly agrees that use of the funds award is subject to single audit requirements pursuant to 2 CFR Part 200, Subpart F – Audit Requirements, Section 200.500.

E. Notification of Adverse Developments. The SUBAWARDEE shall notify County in writing of any developments that have a significant adverse impact on Grant Activities, as soon as reasonably practicable. This notification shall include a statement of the adverse issues,

impact expected, action taken or contemplated, and any assistance needed to resolve the situation.

F. Pre-award Costs. SUBAWARDEE may not incur pre-award costs prior to the effective date of this Agreement as determined by CalOES. If SUBAWARDEE chooses to incur pre-award costs, it is at SUBAWARDEE's sole risk and shall not impose any obligation on County.

G. Unexpended Allocation. SUBAWARDEE is not authorized to carry forward any unexpended allocation of Grant Funds beyond the term of this Agreement. As soon as SUBAWARDEE is aware that Grant Funds will not be expended, SUBAWARDEE shall notify County in writing and return the unused allocation of Grant Funds to County.

H. Ownership of Work Product. All technical data, evaluations, plans, specifications, reports, documents, or other work products developed by SUBAWARDEE hereunder shall be the property of the federal government, state, and County and shall be delivered to County by SUBAWARDEE upon completion of the Grant Activities. SUBAWARDEE may retain copies thereof for its files and internal use. Publication of the information directly derived from work performed or data obtained in connection with services rendered under this Agreement must first be approved in writing by County and state as applicable.

I. Property. Title to all nonexpendable and expendable tangible personal property purchased by the SUBAWARDEE with Grant Funds shall be deemed to have vested in the SUBAWARDEE upon purchase, in accordance with the provisions of 2 CRF 200, without further obligation. Title to any federally owned property remains vested in the federal government. No real property may be acquired with Grant Funds.

J. Reports. SUBAWARDEE shall submit the following reports and/or information electronically to County:

   i. *Quarterly Status Report*. This report form provided by County, is due 15 days after quarter end, shall keep the County informed of SUBAWARDEE activity and progress toward accomplishment of the objectives of the Grant Activities.

   ii. *Equipment Tracking*. SUBAWARDEE shall submit equipment information to County at least every 18 months, as required by 2 CFR 200. The equipment information must include a physical inventory report of all equipment that was purchased with the Grant Funds. SUBAWARDEE must report all equipment valued under $5,000 to County, and County approval is required to remove such equipment from the equipment inventory report. Equipment that is lost, stolen, or destroyed needs to be reported to County and may need to be replaced by SUBAWARDEE at SUBAWARDEE's sole expense.

4. GRANT FUND PAYMENT.

A. County shall process SUBAWARDEE's payment requests on a reimbursement basis. Grant Funds shall not be paid in advance. SUBAWARDEE shall submit payment requests quarterly, as provided below.

   i. Quarter 1 (January–March): Payment request due April 15

ii. Quarter 2 (April–June): Payment request July 15

iii. Quarter 3 (July–September): Payment request October 15

iv. Quarter 4 (October–December): Payment request January 15

With each payment request, SUBAWARDEE must provide supporting documentation reflecting actual costs incurred and associated Grant Activities performed and/or completed. Failure to meet the above deadlines and/or provide supporting documentation may result in payment delays.

B. Each payment request must include a certification, signed by an official who is authorized to legally bind the SUBAWARDEE, which reads as follows:

> "By signing this report, I certify to the best of my knowledge and belief that the report is true, complete, and accurate, and the expenditures, disbursements and cash receipts are for the purposes and objectives set forth in the terms and conditions of the Federal award. I am aware that any false, fictitious, or fraudulent information, or the omission of any material fact, may subject me to criminal, civil, or administrative penalties for fraud, false statements, and false claims otherwise. (U.S. Code Title 18, Section 1001 and Title 31, Sections 3729–3730 and 3801–3812)."

C. County will review each payment request from SUBAWARDEE and, if approved, submit the request to CalOES on behalf of SUBAWARDEE. CalOES may submit the request to FEMA for approval.

D. SUBAWARDEE understands and acknowledges that County does not control either the process for approving payment requests submitted to CalOES or CalOES's decision regarding the payment request. Responsibility for processing, approving, and making payment in connection with any payment request submitted by SUBAWARDEE lies exclusively with CalOES and County shall have no financial liability to SUBAWARDEE for CalOES's failure to process, approve, or make payment in connection with any payment request.

E. If the County becomes aware of any deficiencies in the payment request, County shall communicate the deficiencies to the SUBAWARDEE along with the corrective action necessary to allow County to submit the payment request to CalOES. SUBAWARDEE shall be responsible for correcting any deficiencies in the request.

F. When County receives Grant Funds from CalOES, County will process payment of Grant Funds to SUBAWARDEE. Because of the multiple agencies involved in reviewing and approving these payment requests, payment processing may take up to twelve (12) months.

5. DISGORGEMENT. SUBAWARDEE understands and acknowledges that its failure to comply with the requirements of this Agreement, including but not limited to its failure to comply with the rules and regulations governing the use of Grant Funds, may result in an audit or monitoring of SUBAWARDEE's use of the Grant Funds or SUBAWARDEE's compliance with the rules and regulations governing its use of Grant Funds, or both, by FEMA or CalOES. SUBAWARDEE further understands and acknowledges that the result of any such audit may be a demand by FEMA, CalOES, and/or County that SUBAWARDEE repay (disgorge) some or all of the Grant Funds.

SUBAWARDEE shall indemnify, defend, and hold harmless the County, its Board of Supervisors, officers, directors, agents, and employees from and against any and all claims, demands, actions, losses, liabilities, damages, and costs, including reasonable attorneys' fees, arising out of or resulting from a demand from FEMA or CalOES, or both, for repayment of some or all of the Grant Funds as a result of SUBAWARDEE's failure to comply with any term or condition of this Agreement.

6. NOTICES. Any notice, request, demand, or other communication required or authorized under this Agreement shall be deemed to be properly given when:

A. Delivered personally to the person below, as of the date of delivery; or

B. Mailed to the physical address listed below by U.S. Mail or similar service, with postage prepaid and properly addressed, as of the date of postmark; or

C. Emailed to the email address(es) below, as of the date a read receipt, an acknowledgement from the recipient, or other proof of delivery is received by the sender.

In the case of County, to:

Name, Title:	David Atkinson, Assistant Director of Emergency Services
Address:	2968 Richardson Dr. Auburn CA, 95603
Telephone:	530-886-5300
Email:	grants@placer.ca.gov

In the case of SUBAWARDEE, to:

Name, Title:	Dominick Casey, City Manager
Address:	311 Vernon Street Roseville, CA 95678
Telephone:	916-774-5362
Email:	CityManager@roseville.ca.us

7. TERMINATION AND ENFORCEMENT. This Agreement may be terminated by County if SUBAWARDEE materially fails to comply with the terms and conditions herein. Such termination shall be effective upon service of written notice of termination on SUBAWARDEE. As an alternative to termination, County may, in its sole and exclusive discretion, impose special conditions or take appropriate action as provided in 2 CFR 200 subpart D.

8. INDEMNIFICATION. SUBAWARDEE shall indemnify, defend, and hold harmless the County, its Board of Supervisors, officers, directors, agents, employees, and volunteers from and against any and all claims, demands, actions, losses, liabilities, damages, and costs, including reasonable attorneys' fees, arising out of or related to this Agreement. This obligation to indemnify will survive termination of this Agreement.

9. EXHIBITS; MERGER CLAUSE; AMENDMENTS. This Agreement, including all Exhibits and Attachments, incorporated herein by this reference, constitutes the sole Agreement between the Parties and correctly states the rights, duties, and obligations of each party as of this document's date. In the event that any term, condition, provision, requirement, or specification set forth in the body of this Agreement conflicts with or is inconsistent with any term, condition, provision,

requirement, or specification in any Exhibit and/or Attachment to this Agreement, the provisions of the body of the Agreement shall prevail. Any prior agreement, promises, negotiations, or representations between the parties not expressly stated in this document are not binding.

All subsequent modifications or amendments to this Agreement shall be in writing and signed by the parties.

10. SUCCESSORS AND ASSIGNS. This Agreement is to be binding on the successors of the parties hereto. The services called for herein are deemed unique and SUBAWARDEE shall not assign, transfer, or otherwise substitute its interest in this Agreement.

11. CONFLICT OF INTEREST. SUBAWARDEE certifies that it has no current business or financial relationship with any County employee or official, or other County contract provider that could create a conflict with this Agreement and will not enter into any such business or financial relationships during the period of this Agreement. SUBAWARDEE attests that its employees and the officers of its governing body shall avoid any actual or potential conflicts of interest, and that no officer or employee who exercises any functions or responsibilities in connection with this Agreement shall have any legally prohibited personal financial interest or benefit which either directly or indirectly arises out of this Agreement. SUBAWARDEE shall establish safeguards to prohibit employees or officers from using their positions for a purpose which could result in legally prohibited private gain or gives the appearance of being motivated for legally prohibited private gain for themselves or others, particularly those with whom they have family, business, or other ties. SUBAWARDEE certifies that no official or employee of the County, nor any business entity in which an official of the County has an interest, has been employed or retained to solicit or aid in the procuring of this Agreement. In addition, SUBAWARDEE agrees that no such person will be employed in the performance of this Agreement without immediately notifying the County.

12. VALIDITY OF ALL PARTS OF THE AGREEMENT. Should any part of this Agreement be declared by a final decision by a court or tribunal of competent jurisdiction to be unconstitutional, invalid or beyond the authority of either party to enter into or carry out, such decision shall not affect the validity of the remainder of this Agreement, which shall continue in full force and effect, provided that the remainder of this Agreement can be interpreted to give effect to the intentions of the parties.

13. GOVERNING STATE LAWS AND JURISDICTION. This Agreement is executed and intended to be performed in the State of California, and the laws of that State shall govern its interpretation and effect. Any legal proceedings on this agreement shall be brought under the jurisdiction of the Superior Court of the County of Placer, State of California. Each party waives any Federal court removal and/or original jurisdiction rights it may have.

14. WAIVERS IN PART. County's waiver of the performance of any covenant, condition, obligation, representation, warranty or promise in this Agreement shall not invalidate this Agreement or be deemed a waiver of any other covenant, condition, obligation, representation, warranty or promise. County's waiver of the time for performing any act or condition hereunder does not constitute a waiver of the act or condition itself.

15. INTERPRETATION. This Agreement shall be deemed to have been prepared equally by both of the parties, and the Agreement and its individual provisions shall not be construed or interpreted more favorably for one party on the basis that the other party prepared it.

16. DUPLICATE COUNTERPARTS; ELECTRONIC SIGNATURE. This Agreement may be executed in duplicate counterparts. Each counterpart shall be an original and both together shall constitute but one and the same document. This Agreement shall not be deemed executed unless and until at least one counterpart bears the signatures of all parties' designated signatories.

In addition, this Agreement and future documents relating to this Agreement may be digitally signed in accordance with California law. Any party to this Agreement may revoke such agreement to permit electronic signatures at any time in relation to all future documents by providing notice pursuant to this Agreement.

IN WITNESS WHEREOF, the parties hereto have caused their duly authorized representatives to execute this Agreement.

CITY OF ROSEVILLE ("SUBAWARDEE")*

_____
Signature

_____
Print Name

☐ Chair of the Board, ☐ President, or
☐ Vice President

Date: _____

_____
Signature

_____
Print Name

☐ Secretary, ☐ Asst. Secretary,
☐ Chief Financial Officer, or ☐ Asst. Treasurer

Date: _____

COUNTY OF PLACER ("COUNTY")

_____
David Atkinson, PE
Assistant Director of Emergency Services
Placer County Office of Emergency Services

Date: _____

Approved as to Form
Office of Placer County Counsel

_____

Date: _____

EXHIBITS:
Exhibit A: Scope of Grant Activities
Exhibit B: CalOES Standard Assurances
Exhibit C: County Resolution No. 2022-128

Exhibit D: SUBAWARDEE Resolution No. XXXXX

EXHIBIT A
SCOPE OF GRANT ACTIVITIES

See Attachment A

EXHIBIT B
CalOES STANDARD ASSURANCES

See Attachment B

EXHIBIT C
COUNTY RESOLUTION NO. 2022-128

See Attachment C

EXHIBIT D
SUBAWARDEE RESOLUTION NO. XXXXX

COUNTY OF Placer
EMERGENCY SERVICES

April 22, 2024

Rick Bartee, Fire Chief
City of Roseville Fire Department
316 Vernon St., Suite 480
Roseville, California 95678

DELIVERED VIA E-MAIL: rbartee@roseville.ca.us
CC'd: kcullison@roseville.ca.us; krostam@roseville.ca.us

SUBJECT: **NOTIFICATION OF SUBAWARD**
Fiscal Year (FY) 2023 Homeland Security Grant Program (HSGP) Subaward #2023-0042
Subaward Period: 09/01/2023-05/31/2026

Dear Chief Bartee:

We are pleased to announce the approval of your FY 2023 HSGP subaward for the following project(s):

Project 009: Project Title: Roseville Fire Department Hazmat Railcar Kit
Project Description: Replacement of Railcar Emergency Response Kit for the Type 1 Hazmat Team
Award Amount: $10,000.00

Project 010: Project Title: Roseville Fire Department Raman Chemical Detector
Project Description: Purchase of Raman Chemical Detector for Type 1 Hazardous Materials Team.
Award Amount: $68,065.00

This subaward is subject to requirements in the attached agreement, including but not limited to the Federal Emergency Management Agency (FEMA) Notice of Funding Opportunity (NOFO), the California Supplement to the NOFO, the FEMA Preparedness Grants Manual, and the California Governor's Office of Emergency Services (CalOES) Standard Assurances for Federal Non-Disaster Grant Programs.

To accept this award, you are required to execute and return the enclosed agreement with all required attachments to the Placer County Office of Emergency Services at grants@placer.ca.gov within 60 days of the date of this notice. We can also facilitate electronic signature of the documents, upon request.

COUNTY OF Placer
EMERGENCY SERVICES

After we receive the document with your signatures, we will provide you with a fully executed copy. For further assistance, please contact Brandy Dunkel at bdunkel@placer.ca.gov or 530-308-3555.

Sincerely,

David Atkinson, PE
Assistant Director of Emergency Services
Placer County Office of Emergency Services

Encl.
Department of Homeland Security Subaward Grant Agreement

Standard Assurances
For Cal OES Federal Non-Disaster Grant Programs

As the duly authorized representative of the Applicant, I hereby certify that the Applicant has the legal authority to apply for federal assistance and the institutional, managerial, and financial capability (including funds sufficient to pay any non-federal share of project cost) to ensure proper planning, management, and completion of the project described in this application, within prescribed timelines.

The requirements outlined in these assurances apply to Applicant and any of its subrecipients.

I further acknowledge that the Applicant is responsible for reviewing and adhering to all requirements within the:

(a) Applicable Federal Regulations (see below);
(b) Federal Program Notice of Funding Opportunity (NOFO);
(c) Federal Preparedness Grants Manual;
(d) California Supplement to the NOFO; and
(e) Federal and State Grant Program Guidelines.

Federal Regulations
Government cost principles, uniform administrative requirements, and audit requirements for federal grant programs are set forth in Title 2, Part 200 of the Code of Federal Regulations (C.F.R.). Updates are issued by the Office of Management and Budget (OMB) and can be found at http://www.whitehouse.gov/omb/.

In the event Cal OES determines that changes are necessary to the subaward after a subaward has been made, including changes to period of performance or terms and conditions, Applicants will be notified of the changes in writing. Once notification has been made, any subsequent request for funds will indicate Applicant acceptance of the changes to the subaward.

State and federal grant award requirements are set forth below. The Applicant hereby agrees to comply with the following:

1. **Proof of Authority**
   The Applicant will obtain proof of authority from the city council, governing board, or authorized body in support of this project. This written authorization must specify that the Applicant and the city council, governing board, or authorized body agree:

Initials _____

(a) To provide all matching funds required for the grant project and that any cash match will be appropriated as required;
(b) Any liability arising out of the performance of this agreement shall be the responsibility of the Applicant and the city council, governing board, or authorized body;
(c) Grant funds shall not be used to supplant expenditures controlled by the city council, governing board, or authorized body;
(d) The Applicant is authorized by the city council, governing board, or authorized body to apply for federal assistance, and the institutional, managerial and financial capability (including funds sufficient to pay the non-federal share of project cost, if any) to ensure proper planning, management and completion of the project described in this application; and
(e) The official executing this agreement is authorized by the Applicant.

This Proof of Authority must be maintained on file and readily available upon request.

2. **Period of Performance**
The period of performance is specified in the Award. The Applicant is only authorized to perform allowable activities approved under the award, within the period of performance.

3. **Lobbying and Political Activities**
As required by Section 1352, Title 31 of the United States Code (U.S.C.), for persons entering into a contract, grant, loan, or cooperative agreement from an agency or requests or receives from an agency a commitment providing for the United States to insure or guarantee a loan, the Applicant certifies that:

(a) No federal appropriated funds have been paid or will be paid, by or on behalf of the undersigned, to any person for influencing or attempting to influence an officer or employee of an agency, a Member of Congress, an officer or employee of Congress, or an employee of a Member of Congress in connection with the awarding of any Federal contract, the making of any federal grant, the making of any federal loan, the entering into of any cooperative agreement, and the extension, continuation, renewal, amendment, or modification of any federal contract, grant, loan, or cooperative agreement.

Initials _____

(b) If any funds other than federal appropriated funds have been paid or will be paid to any person for influencing or attempting to influence an officer or employee of any agency, a Member of Congress, an officer or employee of Congress, or an employee of a Member of Congress in connection with this federal contract, grant, loan, or cooperative agreement, the undersigned shall complete and submit Standard Form-LLL, "Disclosure Form to Report Lobbying," in accordance with its instructions.

(c) The Applicant shall require that the language of this certification be included in the award documents for all subawards at all tiers (including subcontracts, subgrants, and contracts under grants, loans, and cooperative agreements) and that all subrecipients shall certify and disclose accordingly.

The Applicant will also comply with provisions of the Hatch Act (5 U.S.C. §§ 1501- 1508 and §§ 7324-7328) which limit the political activities of employees whose principle employment activities are funded in whole or in part with federal funds.

Finally, the Applicant agrees that federal funds will not be used, directly or indirectly, to support the enactment, repeal, modification or adoption of any law, regulation or policy without the express written approval from the California Governor's Office of Emergency Services (Cal OES) or the federal awarding agency.

4. Debarment and Suspension

As required by Executive Orders 12549 and 12689, and 2 C.F.R. § 200.214 and codified in 2 C.F.R. Part 180, Debarment and Suspension, the Applicant will provide protection against waste, fraud, and abuse by debarring or suspending those persons deemed irresponsible in their dealings with the federal government. The Applicant certifies that it and its subrecipients:

(a) Are not presently debarred, suspended, proposed for debarment, declared ineligible, or voluntarily excluded from covered transactions by any federal department or agency;

(b) Have not within a three-year period preceding this application been convicted of or had a civil judgment rendered against them for commission of fraud or a criminal offense in connection with obtaining, attempting to obtain, or performing a public (federal, state, or local) transaction or contract under a public transaction; violation of federal or state antitrust statutes or commission of embezzlement, theft, forgery, bribery, falsification or destruction of records, making false statements, or receiving stolen property;

Initials _____

(c) Are not presently indicted for or otherwise criminally or civilly charged by a governmental entity (federal, state, or local) with commission of any of the offenses enumerated in paragraph (4)(b) of this certification; and
(d) Have not within a three-year period preceding this application had one or more public transaction (federal, state, or local) terminated for cause or default.

Where the Applicant is unable to certify to any of the statements in this certification, he or she shall attach an explanation to this application.

5. Non-Discrimination and Equal Employment Opportunity
The Applicant will comply with all state and federal statutes relating to non-discrimination, including:

(a) Title VI of the Civil Rights Act of 1964 (Public Law (P.L.) 88-352 and 42 U.S.C. § 2000d et. seq.) which prohibits discrimination on the basis of race, color, or national origin and requires that recipients of federal financial assistance take reasonable steps to provide meaningful access to persons with limited English proficiency (LEP) to their programs and services;
(b) Title IX of the Education Amendments of 1972, (20 U.S.C. §§ 1681-1683, and 1685-1686), which prohibits discrimination on the basis of sex in any federally funded educational program or activity;
(c) Section 504 of the Rehabilitation Act of 1973, (29 U.S.C. § 794), which prohibits discrimination against those with disabilities or access and functional needs;
(d) Americans with Disabilities Act (ADA) of 1990 (42 U.S.C. § 12101et seq.), which prohibits discrimination on the basis of disability and requires buildings and structures be accessible to those with disabilities and access and functional needs;
(e) Age Discrimination Act of 1975, (42 U.S.C. §§ 6101-6107), which prohibits discrimination on the basis of age;
(f) Public Health Service Act of 1912 (42 U.S.C. §§ 290 dd—2), relating to confidentiality of patient records regarding substance abuse treatment;
(g) Title VIII of the Civil Rights Act of 1968 (42 U.S.C. § 3601 et seq.), relating to nondiscrimination in the sale, rental or financing of housing as implemented by the Department of Housing and Urban Development at 24 C.F.R. Part100. The prohibition on disability discrimination includes the requirement that new multifamily housing with four or more dwelling units—i.e., the public and common use areas and individual apartment units (all units in buildings with elevators and ground-floor units in buildings without elevators)—

be designed and constructed with certain accessible features (See 24 C.F.R. § 100.201);

(h) Executive Order 11246, which prohibits federal contractors and federally assisted construction contractors and subcontractors, who do over $10,000 in Government business in one year from discriminating in employment decisions on the basis of race, color, religion, sex, sexual orientation, gender identification or national origin;

(i) Executive Order 11375, which bans discrimination on the basis of race, color, religion, sex, sexual orientation, gender identification, or national origin in hiring and employment in both the United States federal workforce and on the part of government contractors;

(j) California Public Contract Code § 10295.3, which prohibits discrimination based on domestic partnerships and those in same sex marriages;

(k) Department of Homeland Security (DHS) policy to ensure the equal treatment of faith-based organizations, under which the Applicant must comply with equal treatment policies and requirements contained in 6 C.F.R. Part 19;

(l) The Applicant will comply with California's Fair Employment and Housing Act (FEHA) (California Government Code §§12940-12957), as applicable. FEHA prohibits harassment and discrimination in employment because of ancestry, familial status, race, color, religious creed (including religious dress and grooming practices), sex (which includes pregnancy, childbirth, breastfeeding and medical conditions related to pregnancy, childbirth or breastfeeding), gender, gender identity, gender expression, sexual orientation, marital status, national origin, ancestry, mental and physical disability, genetic information, medical condition, age, pregnancy, denial of medical and family care leave, or pregnancy disability leave, military and veteran status, and/or retaliation for protesting illegal discrimination related to one of these categories, or for reporting patient abuse in tax supported institutions;

(m) Any other nondiscrimination provisions in the specific statute(s) under which application for federal assistance is being made; and

(n) The requirements of any other nondiscrimination statute(s) that may apply to this application.

6. Drug-Free Workplace

As required by the Drug-Free Workplace Act of 1988 (41 U.S.C. § 701 et seq.),the Applicant certifies that it will maintain a drug-free workplace and a drug-free awareness program as outlined in the Act.

Initials _____

7. Environmental Standards

The Applicant will comply with state and federal environmental standards, including:

(a) California Environmental Quality Act (CEQA) (California Public Resources Code §§ 21000-21177), to include coordination with the city or county planning agency;
(b) CEQA Guidelines (California Code of Regulations, Title 14, Division 6, Chapter 3, §§ 15000-15387);
(c) Federal Clean Water Act (CWA) (33 U.S.C. § 1251 et seq.), which establishes the basic structure for regulating discharges of pollutants into the waters of the United States and regulating quality standards for surface waters;
(d) Federal Clean Air Act of 1955 (42 U.S.C. § 7401) which regulates air emissions from stationary and mobile sources;
(e) Institution of environmental quality control measures under the National Environmental Policy Act (NEPA) of 1969 (P.L. 91-190); the Council on Environmental Quality Regulations for Implementing the Procedural Provisions of NEPA; and Executive Order 12898 which focuses on the environmental and human health effects of federal actions on minority and low-income populations with the goal of achieving environmental protection for all communities;
(f) Evaluation of flood hazards in floodplains in accordance with Executive Order 11988;
(g) Executive Order 11514 which sets forth national environmental standards;
(h) Executive Order 11738 instituted to assure that each federal agency empowered to enter into contracts for the procurement of goods, materials, or services and each federal agency empowered to extend federal assistance by way of grant, loan, or contract shall undertake such procurement and assistance activities in a manner that will result in effective enforcement of the Clean Air Act and the Federal Water Pollution Control Act Executive Order 11990 which requires preservation of wetlands;
(i) The Safe Drinking Water Act of 1974, (P.L. 93-523);
(j) The Endangered Species Act of 1973, (P.L. 93-205);
(k) Assurance of project consistency with the approved state management program developed under the Coastal Zone Management Act of 1972 (16 U.S.C. §§1451 et seq.);
(l) Conformity of Federal Actions to State (Clear Air) Implementation Plans under Section 176(c) of the Clean Air Act of 1955, as amended (42 U.S.C. §§7401 et seq.); and

(m) Wild and Scenic Rivers Act of 1968 (16 U.S.C. § 1271 et seq.) related to protecting components or potential components of the national wild and scenic rivers system.

The Applicant shall not be: (1) in violation of any order or resolution promulgated by the State Air Resources Board or an air pollution district; 2) subject to a cease-and-desist order pursuant to section 13301 of the California Water Code for violation of waste discharge requirements or discharge prohibitions; or 3) determined to be in violation of federal law relating to air or water pollution.

8. **Audits**
For subrecipients expending $750,000 or more in federal grant funds annually, the Applicant will perform the required financial and compliance audits in accordance with the Single Audit Act Amendments of 1996 and 2 C.F.R., Part 200, Subpart F Audit Requirements.

9. **Cooperation and Access to Records**
The Applicant must cooperate with any compliance reviews or investigations conducted by DHS. In accordance with 2 C.F.R. § 200.337, the Applicant will give the awarding agency, the Comptroller General of the United States and, if appropriate, the state, through any authorized representative, access to and the right to examine all records, books, papers, or documents related to the award. The Applicant will require any subrecipients, contractors, successors, transferees and assignees to acknowledge and agree to comply with this provision.

10. **Conflict of Interest**
The Applicant will establish safeguards to prohibit the Applicant's employees from using their positions for a purpose that constitutes or presents the appearance of personal or organizational conflict of interest, or personal gain.

11. **Financial Management**
False Claims for Payment - The Applicant will comply with 31 U.S.C §§ 3729-3733 which provides that Applicant shall not submit a false claim for payment, reimbursement, or advance.

12. **Reporting - Accountability**
The Applicant agrees to comply with applicable provisions of the Federal Funding Accountability and Transparency Act (FFATA) (P.L. 109-282), including but not limited to (a) the reporting of subawards obligating $30,000 or more in federal funds,

and (b) executive compensation data for first-tier subawards as set forth in 2 C.F.R. Part 170, Appendix A. The Applicant also agrees to comply with the requirements set forth in the government-wide financial assistance award term regarding the System for Award Management and Universal Identifier Requirements located at 2 C.F.R. Part 25, Appendix A.

13. Whistleblower Protections

The Applicant must comply with statutory requirements for whistleblower protections at 10 U.S.C. § 2409, 41 U.S.C. § 4712, and 10 U.S.C. § 2324, 41 U.S.C. § 4304 and § 4310.

14. Human Trafficking

The Applicant will comply with the requirements of Section 106(g) of the Trafficking Victims Protection Act of 2000, as amended (22 U.S.C. § 7104) which prohibits the Applicant or its subrecipients from: (1) engaging in trafficking in persons during the period of time that the award is in effect; (2) procuring a commercial sex act during the period of time that the award is in effect; or (3) using forced labor in the performance of the award or subawards under the award.

15. Labor Standards

The Applicant will comply with the following federal labor standards:

(a) The Davis-Bacon Act (40 U.S.C. §§ 276a to 276a-7), as applicable, and the Copeland Act (40 U.S.C. § 3145 and 18 U.S.C. § 874) and the Contract Work Hours and Safety Standards Act (40 U.S.C. §§ 327-333), regarding labor standards for federally-assisted construction contracts or subcontracts, and

(b) The Federal Fair Labor Standards Act (29 U.S.C. § 201 et seq.) as they apply to employees of institutes of higher learning (IHE), hospitals and other non-profit organizations.

16. Worker's Compensation

The Applicant must comply with provisions which require every employer to be insured to protect workers who may be injured on the job at all times during the performance of the work of this Agreement, as per the workers compensation laws set forth in California Labor Code §§ 3700 et seq.

17. Property-Related

If applicable to the type of project funded by this federal award, the Applicant will:

(a) Comply with the requirements of Titles II and III of the Uniform Relocation Assistance and Real Property Acquisition Policies Act of 1970 (P.L. 91-646)

which provide for fair and equitable treatment of persons displaced or whose property is acquired as a result of federal or federally-assisted programs. These requirements apply to all interests in real property acquired for project purposes regardless of federal participation in purchase;

(b) Comply with flood insurance purchase requirements of Section 102(a) of the Flood Disaster Protection Act of 1973 (P.L. 93-234) which requires federal award subrecipients in a special flood hazard area to participate in the program and to purchase flood insurance if the total cost of insurable construction and acquisition is $10,000 or more;

(c) Assist the awarding agency in assuring compliance with Section 106 of the National Historic Preservation Act of 1966, as amended (16 U.S.C. § 470), Executive Order 11593 (identification and protection of historic properties), and the Archaeological and Historic Preservation Act of 1974 (16U.S.C. § 469a-1 et seq.); and

(d) Comply with the Lead-Based Paint Poisoning Prevention Act (42 U.S.C. § 4831 and 24 CFR Part 35) which prohibits the use of lead-based paint in construction or rehabilitation of residence structures.

18. Certifications Applicable Only to Federally-Funded Construction Projects

For all construction projects, the Applicant will:

(a) Not dispose of, modify the use of, or change the terms of the real property title or other interest in the site and facilities without permission and instructions from the awarding agency. Will record the federal awarding agency directives and will include a covenant in the title of real property acquired in whole or in part with federal assistance funds to assure nondiscrimination during the useful life of the project;

(b) Comply with the requirements of the awarding agency with regard to the drafting, review and approval of construction plans and specifications; and

(c) Provide and maintain competent and adequate engineering supervision at the construction site to ensure that the complete work conforms with the approved plans and specifications and will furnish progressive reports and such other information as may be required by the assistance awarding agency or State.

19. Use of Cellular Device While Driving is Prohibited

The Applicant is required to comply with California Vehicle Code sections 23123 and 23123.5. These laws prohibit driving motor vehicle while using an electronic wireless communications device to write, send, or read a text-based communication.

Drivers are also prohibited from the use of a wireless telephone without hands-free listening and talking, unless to make an emergency call to 911, law enforcement, or similar services.

20. California Public Records Act and Freedom of Information Act

The Applicant acknowledges that all information submitted in the course of applying for funding under this program, or provided in the course of an entity's grant management activities that are under Federal control, is subject to the Freedom of Information Act (FOIA), 5 U.S.C. § 552, and the California Public Records Act, California Government Code §7920.000 et seq. The Applicant should consider these laws and consult its own State and local laws and regulations regarding the release of information when reporting sensitive matters in the grant application, needs assessment, and strategic planning process.

HOMELAND SECURITY GRANT PROGRAM (HSGP) – PROGRAM SPECIFIC ASSURANCES / CERTIFICATIONS

21. Acknowledgment of Federal Funding from DHS

The Applicant must acknowledge its use of federal funding when issuing statements, press releases, requests for proposals, bid invitations, and other documents describing projects or programs funded in whole or in part with federal funds.

22. Activities Conducted Abroad

The Applicant must ensure that project activities carried on outside the United States are coordinated as necessary with appropriate government authorities and that appropriate licenses, permits, or approvals are obtained.

23. Best Practices for Collection and Use of Personally Identifiable Information (PII)

DHS defines personally identifiable information (PII) as any information that permits the identity of an individual to be directly or indirectly inferred, including any information that is linked or linkable to that individual. If the Applicant collects PII, the Applicant is required to have a publicly-available privacy policy that describes standards on the usage and maintenance of PII they collect. The Applicant may refer to the DHS Privacy Impact Assessments: Privacy Guidance and Privacy template as a useful resource.

Initials _____

24. Copyright

The Applicant must affix the applicable copyright notices of 17 U.S.C. §§ 401 or 402 and an acknowledgement of United States Government sponsorship (including the award number) to any work first produced under federal financial assistance awards.

25. Duplication of Benefits

Any cost allocable to a particular federal financial assistance award provided for in 2 C.F.R. Part 200, Subpart E may not be charged to other federal financial assistance awards to overcome fund deficiencies, to avoid restrictions imposed by federal statutes, regulations, or federal financial assistance award terms and conditions, or for other reasons. However, these prohibitions would not preclude the Applicant from shifting costs that are allowable under two or more awards in accordance with existing federal statutes, regulations, or the federal financial assistance award terms and conditions.

26. Energy Policy and Conservation Act

The Applicant must comply with the requirements of 42 U.S.C. § 6201 which contain policies relating to energy efficiency that are defined in the state energy conservation plan issued in compliance with this Act.

27. Federal Debt Status

The Applicant is required to be non-delinquent in its repayment of any federal debt. Examples of relevant debt include delinquent payroll and other taxes, audit disallowances, and benefit overpayments. See OMB Circular A-129.

28. Fly America Act of 1974

The Applicant must comply with Preference for United States Flag Air Carriers: (air carriers holding certificates under 49 U.S.C. § 41102) for international air transportation of people and property to the extent that such service is available, in accordance with the International Air Transportation Fair Competitive Practices Act of 1974 (49 U.S.C. § 40118) and the interpretative guidelines issued by the Comptroller General of the United States in the March 31, 1981, amendment to Comptroller General Decision B-138942.

29. Hotel and Motel Fire Safety Act of 1990

In accordance with Section 6 of the Hotel and Motel Fire Safety Act of 1990, the Applicant must ensure that all conference, meeting, convention, or training space funded in whole or in part with federal funds complies with the fire prevention and control guidelines of the Federal Fire Prevention and Control Act of 1974, as amended, 15 U.S.C. § 2225a.

30. Non-supplanting Requirement

If the Applicant receives federal financial assistance awards made under programs that prohibit supplanting by law, the Applicant must ensure that federal funds do not replace (supplant) funds that have been budgeted for the same purpose through non- federal sources.

31. Patents and Intellectual Property Rights

Unless otherwise provided by law, the Applicant is subject to the Bayh-Dole Act, Pub. L. No. 96-517, as amended, and codified in 35 U.S.C. § 200 et seq. The Applicant is subject to the specific requirements governing the development, reporting, and disposition of rights to inventions and patents resulting from financial assistance awards located at 37 C.F.R. Part 401 and the standard patent rights clause located at 37 C.F.R. § 401.14.

32. SAFECOM

If the Applicant receives federal financial assistance awards made under programs that provide emergency communication equipment and its related activities, the Applicant must comply with the SAFECOM Guidance for Emergency Communication Grants, including provisions on technical standards that ensure and enhance interoperable communications.

33. Terrorist Financing

The Applicant must comply with Executive Order 13224 and United States law that prohibit transactions with, and the provisions of resources and support to, individuals and organizations associated with terrorism. The Applicant is legally responsible for ensuring compliance with the Order and laws.

34. Reporting of Matters Related to Recipient Integrity and Performance

If the total value of the Applicant's currently active grants, cooperative agreements, and procurement contracts from all federal assistance offices exceeds $10,000,000 for any period of time during the period of performance of this federal financial assistance award, the Applicant must comply with the requirements set forth in the government-wide Award Term and Condition for Recipient Integrity and Performance Matters located at 2 C.F.R. Part 200, Appendix XII, the full text of which is incorporated here by reference in the award terms and conditions.

Initials _____

35. USA Patriot Act of 2001

The Applicant must comply with requirements of the Uniting and Strengthening America by Providing Appropriate Tools Required to Intercept and Obstruct Terrorism Act (USA PATRIOT Act), which amends 18 U.S.C. §§ 175-175c.

36. Use of DHS Seal, Logo, and Flags

The Applicant must obtain permission from their DHS Financial Assistance Office, prior to using the DHS seal(s), logos, crests or reproductions of flags or likenesses of DHS agency officials, including use of the United States Coast Guard seal, logo, crests or reproductions of flags or likenesses of Coast Guard officials.

37. Performance Goals

In addition to the Biannual Strategy Implementation Report submission requirements outlined in the Preparedness Grants Manual, the Applicant must demonstrate how the grant-funded project addresses the core capability gap associated with each project and identified in the Threat and Hazard Identification and Risk Analysis or Stakeholder Preparedness Review or sustains existing capabilities, as applicable. The capability gap reduction or capability sustainment must be addressed in the Project Description of the BSIR for each project.

38. Applicability of DHS Standard Terms and Conditions to Tribes

The DHS Standard Terms and Conditions are a restatement of general requirements imposed upon the Applicant and flow down to any of its subrecipients as a matter of law, regulation, or executive order. If the requirement does not apply to Indian tribes or there is a federal law or regulation exempting its application to Indian tribes, then the acceptance by Tribes of, or acquiescence to, DHS Standard Terms and Conditions does not change or alter its inapplicability to an Indian tribe. The execution of grant documents is not intended to change, alter, amend, or impose additional liability or responsibility upon the Tribe where it does not already exist.

39. Required Use of American Iron, Steel, Manufactured Products, and Construction Materials

The Applicant must comply with the "Build America, Buy America" Act (BABAA), enacted as part of the Infrastructure Investment and Jobs Act and Executive Order 14005. Applicants receiving a federal award subject to BABAA requirements may not use federal financial assistance funds for infrastructure projects unless:

(a) All iron and steel used in the project are produced in the United States – this means all manufacturing processes, from the initial melting stage through the application of coatings, occurred in the United States;

(b) All manufactured products used in the project are produced in the United States – this means the manufactured product was manufactured in the United States; and the cost of the components of the manufactured product that are mined, produced, or manufactured in the United States is greater than 55 percent of the total cost of all components of the manufactured product, unless another standard for determining the minimum amount of domestic content of the manufactured product has been established under applicable law or regulation; and
(c) All construction materials are manufactured in the United States – this means that all manufacturing processes for the construction material occurred in the United States.

The "Buy America" preference only applies to articles, materials, and supplies that are consumed in, incorporated into, or affixed to an infrastructure project. It does not apply to tools, equipment, and supplies, such as temporary scaffolding, brought to the construction site and removed at or before the completion of the infrastructure project. Nor does a "Buy America" preference apply to equipment and furnishings, such as movable chairs, desks, and portable computer equipment, that are used at or within the finished infrastructure project but are not an integral part of the structure or permanently affixed to the infrastructure project.

Per section 70914(c) of BABAA, FEMA may waive the application of a "Buy America" preference under an infrastructure program in certain cases.

On July 1, 2022, OMB approved FEMA's General Applicability Public Interest Waiver of the BABAA requirements to be effective for a period of six months, through January 1, 2023. Applicants will not be required to follow the BABAA requirements for FEMA awards made, and any other funding FEMA obligates, during this waiver period. For any new awards FEMA makes after January 1, 2023, as well as new funding FEMA obligates to existing awards or through renewal awards where the new funding is obligated after January 1, 2023, Applicants will be required to follow the BABAA requirements unless another waiver is requested and approved.

40. Advancing Effective, Accountable Policing and Criminal Justice Practice to Enhance Public Trust and Public Safety

The Applicant must comply with the requirements of section 12(c) of Executive Order 14074. The Applicant is also encouraged to adopt and enforce policies consistent with Executive Order 14074 to support safe and effective policing.

Initials _____

Standard Assurances
For Cal OES Federal Non-Disaster Grant Programs

IMPORTANT
The purpose of these assurances is to obtain federal and state financial assistance, including any and all federal and state grants, loans, reimbursement, contracts, etc. Applicant recognizes and agrees that state financial assistance will be extended based on the representations made in these assurances. These assurances are binding on Applicant, its successors, transferees, assignees, etc. as well as any of its subrecipients. Failure to comply with any of the above assurances may result in suspension, termination, or reduction of grant funds.

All appropriate documentation, as outlined above, must be maintained on file by the Applicant and available for Cal OES or public scrutiny upon request. Failure to comply with these requirements may result in suspension of payments under the grant or termination of the grant or both and the Applicant may be ineligible for award of any future grants if Cal OES determines that the Applicant: (1) has made false certification, or (2) violates the certification by failing to carry out the requirements as noted above.

All of the language contained within this document must be included in the award documents for all subawards at all tiers. Applicants are bound by DHS Standard Terms and Conditions 2023, Version 2, hereby incorporated by reference, which can be found at: https://www.dhs.gov/publication/fy15-dhs- standard-terms-and-conditions.

The undersigned represents that he/she is authorized to enter into this agreement for and on behalf of the Applicant.

Applicant:_____

Signature of Authorized Agent: _____

Printed Name of Authorized Agent: _____

Title:_____Date: _____

Initials _____

Before the Board of Supervisors
County of Placer, State of California

In the matter of: A RESOLUTION DESIGNATING COUNTY STAFF TO PERFORM ALL ACTIONS NECESSARY TO OBTAIN AND EXECUTE THE 2022, 2023, AND 2024 HOMELAND SECURITY GRANT PROGRAMS (HSGP)

Resolution No.: 2022-128

The following Resolution was duly passed by the Board of Supervisors of the County of Placer at a regular meeting held June 21, 2022, by the following vote on roll call:

Ayes: GORE, HOLMES, JONES, GUSTAFSON

Noes: NONE

Absent: WEYGANDT

Signed and approved by me after its passage.

Chair, Board of Supervisors

Attest:

Clerk of said Board

WHEREAS, the County of Placer is a subgrantee of the State of California for the Federal Homeland Security Grant Program (HSGP) which is managed by the California Governor's Office of Emergency Services (Cal OES); and

WHEREAS, CalOES requires the Board of Supervisors designate staff to perform all actions necessary to obtain and execute the 2022, 2023, and 2024 HSGP; and

WHEREAS, the Board confirms that the County Executive Officer, Deputy County Executive Officer, Assistant Director of Emergency Services, and Staff Services Manager are the appropriate designees to complete activities related to the administration of the HSGP.

BE IT RESOLVED, by the Board of Supervisors that the designated staff are authorized to perform all actions required to obtain and manage funds for the entirety of 2022, 2023, and 2024 HSGP performance periods. The foregoing Resolution was duly passed and adopted by the Board of Supervisors for the County of Placer, State of California at the regular meeting of the Board of Supervisors on June 21, 2022 by the vote listed above.

Attachment: Exhibit 1 – Governing Body Resolution

Governing Body Resolution

BE IT RESOLVED BY THE County of Placer Board of Supervisors
(Governing Body)

OF THE Placer County Office of Emergency Services *THAT*
(Name of Applicant)

County Executive Officer *OR*
(Name or Title of Authorized Agent)

Deputy County Executive Officer *OR*
(Name or Title of Authorized Agent)

Assistant Director of Emergency Services *OR*
(Name or Title of Authorized Agent)

Staff Services Manager .
(Name or Title of Authorized Agent)

is hereby authorized to execute for and on behalf of the named applicant, a public entity established under the laws of the State of California, any actions necessary for the purpose of obtaining federal financial assistance provided by the federal Department of Homeland Security and subgranted through the State of California.

Passed and approved this 21st day of June , 2022

Certification

I, Megan Wood , duly appointed and
(Name)

Clerk of the Board of the County of Placer
(Title) (Governing Body)

do hereby certify that the above is a true and correct copy of a resolution passed and approved by

the Board of Supervisors of the County of Placer on the
(Governing body) (Name of Applicant)

21st day of June , 2022

Placer County Clerk of the Board
(Official Position)

(Signature)

June 21, 2022
(Date)

ORDINANCE NO. 6857

ORDINANCE OF THE COUNCIL OF THE CITY OF ROSEVILLE AUTHORIZING CERTAIN AMENDMENTS TO THE FISCAL YEAR 2024-25 BUDGET AND DECLARING THIS ORDINANCE TO BE IMMEDIATELY EFFECTIVE AS AN APPROPRIATION MEASURE

THE CITY OF ROSEVILLE ORDAINS:

SECTION 1. The City of Roseville Annual Budget, Fiscal Year 2024-25, is hereby amended as listed on the attached budget adjustment for the Public Safety 2023 Homeland Security Grant Program (Fire).

SECTION 2. This ordinance is hereby declared to be an appropriation measure, immediately effective pursuant to the provisions of Section 5.03 of the Charter.

SECTION 3. The City Clerk is hereby authorized and directed to post a true copy of the foregoing ordinance in each of three (3) conspicuous locations in the City and she shall immediately after such posting enter in the ordinance book, under the record of the ordinance, a certificate under her hand stating the time and place of such publication by posting.

PASSED AND ADOPTED by the Council of the City of Roseville, this _____day of_____, 2024, by the following vote on roll call:

AYES COUNCILMEMBERS:

NOES COUNCILMEMBERS:

ABSENT COUNCILMEMBERS:

_____
MAYOR

ATTEST:

_____
City Clerk

REQUEST FOR BUDGET ADJUSTMENT

Updated 12/1/2023

REQUESTER NAME & TITLE:	Katrina Rostam, Management Analyst II	FISCAL YEAR:	2024-25
PREPARER NAME & TITLE:	Katrina Rostam, Management Analyst II	COUNCIL DATE (if applicable):	08/21/24
DEPARTMENT/DIVISION:	Fire Department / Fire Administration	ORDINANCE:	

EXPENDITURES/EXPENSES/TRANSFERS OUT

ACCOUNT STRING				BUDGET ($)	DESCRIPTION
Fund	Account	Center	Project	station 8	
2270	6587	84001	700065	78,065	Increase Fire-2023 Homeland Security Grant PC 2023-0042 Expense Budget
EXPENDITURES/EXPENSES/TRANSFERS OUT TOTAL				78,065	

REVENUES/TRANSFERS IN

ACCOUNT STRING				BUDGET ($)	DESCRIPTION
Fund	Account	Center	Project	Adjustment	
2270	4401	84001	700065	78,065	Increase Fire-2023 Homeland Security Grant PC 2023-0042 Reimbursement Budget
REVENUES/TRANSFERS IN TOTAL				78,065	

NET ADJUSTMENT	-	

FUND BALANCE

ACCOUNT STRING				BUDGET ($)	DESCRIPTION
Fund	Account	Center	Project	Adjustment	
	3601	00000	000000		
	3601	00000	000000		
	3601	00000	000000		
	3601	00000	000000		
	3601	00000	000000		
	3601	00000	000000		
FUND BALANCE TOTAL				-	

Justification for Budget Adjustment:

Fire Department Staff recommends that Council authorize the establishment of a new Capital Improvement Project - the FY2023 Homeland Security Grant Program - Fire - PC2023-0042 Project (the "Project"), and adopt an ordinance to approve a budget adjustment appropriating $78,065 in the Grants fund to the project for the purchase of a rail car emergency response kit and a chemical detector for the Type I Hazardous Materials Team. Funding is provided by the Homeland Security Grant Program subaward 2023-0042-071 through the Placer County Office of Emergency Services. The Fire Department will receive full reimbursement for the purchase of $78,065, therefore, this budget adjustment will not affect the General Fund.

RESOLUTION NO. 24-304

ACCEPTING A GRANT AWARD FROM
THE UNITED STATES DEPARTMENT OF HOMELAND SECURITY

WHEREAS, the City of Roseville Police Department received $46,480 in grant funds from the United States Department of Homeland Security, as a sub-grantee through the Placer County Office of Emergency Services (subaward contract 2023-0042-0072), for the purchase of $5,490 in magnified optics equipment for the Rapid Containment Team, $2,990 in tactical medicine training for the Tactical Medicine Program, and $38,000 in night vision/VR equipment for SWAT team members.

NOW, THEREFORE, BE IT RESOLVED by the City Council of the City of Roseville that the City of Roseville accepts the grant award from the United States Department of Homeland Security, and the City Manager is hereby authorized to execute any required documents.

BE IT FURTHER RESOLVED that as the grant recipient, the City of Roseville agrees to comply with all conditions and requirements related to the award.

PASSED AND ADOPTED by the Council of the City of Roseville this ____ day of _____, 2024, by the following vote on roll call:

AYES COUNCILMEMBERS:

NOES COUNCILMEMBERS:

ABSENT COUNCILMEMBERS:

_____
MAYOR

ATTEST:

_____
City Clerk

DEPARTMENT OF HOMELAND SECURITY
SUBAWARDEE GRANT AGREEMENT

CONTRACT NO: 2023-0042-072
DEPARTMENT: Placer County Office of Emergency Services
SUBAWARDEE: City of Roseville
SUBAWARDEE UEI #: W49TKZLUYCJ3

GRANT INFORMATION:
Fiscal Year (FY) 2023 Homeland Security Grant Program (HSGP) Subaward #2023-0042
Subaward Period: 09/01/2023 – 05/31/2026
Federal Grantor Agency – US Department of Homeland Security CFDA #97.067
Pass-through State Agency – California Office of Emergency Services
FIPS #061-00000, Subaward #2023-0042

This Agreement is entered into as of the date last signed below ("Effective Date") between the County of Placer, a political subdivision of the State of California (hereinafter "County") and City of Roseville hereinafter "SUBAWARDEE", collectively "Parties").

WHEREAS, County has been designated as the pass-through agent for the local administration of the State Homeland Security Grant Program ("SHSGP") which consists of federally awarded funds from the Federal Emergency Management Agency ("FEMA") through the California Governor's Office of Emergency Services ("CalOES"); and

WHEREAS, SUBAWARDEE submitted an application to County for an award of a portion of the SHSGP that has been awarded to County; and

WHEREAS, County has approved SUBAWARDEE's application for such grant funds conditioned on SUBAWARDEE's approval and execution of this Agreement; and

WHEREAS, the purpose of this Agreement is to memorialize SUBAWARDEE's legal obligations with respect to its use of the grant funds and its compliance with the terms and conditions of the SHSGP; and

WHEREAS, pursuant to Placer County Board of Supervisors Resolution No. 2022-128 (current HSGP GBR) dated June 21, 2022, which is attached hereto and incorporated herein as Exhibit C, the Assistant Director of the Placer County Office of Emergency Services ("PlacerOES") has been authorized to execute this Agreement on behalf of County; and

WHEREAS, County and SUBAWARDEE desire to enter into this Agreement on the terms and conditions set forth herein.

NOW, THEREFORE, in consideration of the mutual promises hereinafter set forth, County and SUBAWARDEE agree as follows:

1. **GRANT FUNDS & GRANT ACTIVITIES**. SUBAWARDEE will utilize 2023 State Homeland Security Grant Program (SHSGP) grant funds ("Grant Funds") only in the amount, type, and manner described in Exhibit A ("Scope of Grant Activities"). SUBAWARDEE will complete the tasks and/or activities in Exhibit A ("Grant Activities") within the term of this Agreement.

2. TERM OF AGREEMENT. This Agreement commences on the last date of execution of this Agreement and shall terminate on December 31, 2025 (December of year prior to closeout date).

3. SHSGP OBLIGATIONS.

A. Federal and State Requirements. The state and federal grant award requirements are provided in Exhibit B ("CalOES Standard Assurances"). SUBAWARDEE shall abide by all requirements therein, including:

i. The Department of Homeland Security Standard Terms and Conditions referenced therein.

ii. The requirement to provide proof in the form of a duly adopted resolution of the SUBAWARDEE's governing body supporting the application and the proposed Grant Activities and identifying the individual who is authorized to execute this Agreement, which shall be provided as Exhibit D to this Agreement.

iii. The requirement to adhere to government cost principles, uniform administrative requirements, and audit requirements provided in 2 CFR 200, as they may be updated from time to time by the federal Office of Management and Budget.

iv. The requirement to adhere to all applicable federal regulations; the FEMA Notice of Funding Opportunity ("NOFO"); the FEMA Preparedness Grants Manual; the California Supplement to the NOFO; and federal and state grant program guidelines.

v. The audit and access to records provisions, which require SUBAWARDEE to provide County, the Comptroller General of the Unities States, and, if appropriate, the state, with access to all records related to the Grant Funds.

B. Procurement. SUBAWARDEE's systems for acquiring goods and services under this Agreement shall comply with applicable federal regulations. All contracts awarded by SUBAWARDEE related to this Agreement, including but not limited to those in amounts less than the simplified acquisition threshold, shall contain the provisions set forth in 2 CFR 200, as applicable.

C. Use of Grant Funds for Fee or Profit Prohibited. The use of Grant Funds for the payment of any fee or profit under a sub-award, as defined in 2 CFR 200 subpart A–E, is not allowable. The term sub-award does not include the SUBAWARDEE's procurement of goods and services needed to carry out Grant Activities.

D. Post-Award Requirements. SUBAWARDEE shall meet all closeout and continuing responsibilities, such as equipment tracking, monitoring, auditing, and records retention pursuant to the requirements in Exhibit B. SUBAWARDEE expressly agrees that use of the funds award is subject to single audit requirements pursuant to 2 CFR Part 200, Subpart F – Audit Requirements, Section 200.500.

E. Notification of Adverse Developments. The SUBAWARDEE shall notify County in writing of any developments that have a significant adverse impact on Grant Activities, as soon as reasonably practicable. This notification shall include a statement of the adverse issues,

impact expected, action taken or contemplated, and any assistance needed to resolve the situation.

F. Pre-award Costs. SUBAWARDEE may not incur pre-award costs prior to the effective date of this Agreement as determined by CalOES. If SUBAWARDEE chooses to incur pre-award costs, it is at SUBAWARDEE's sole risk and shall not impose any obligation on County.

G. Unexpended Allocation. SUBAWARDEE is not authorized to carry forward any unexpended allocation of Grant Funds beyond the term of this Agreement. As soon as SUBAWARDEE is aware that Grant Funds will not be expended, SUBAWARDEE shall notify County in writing and return the unused allocation of Grant Funds to County.

H. Ownership of Work Product. All technical data, evaluations, plans, specifications, reports, documents, or other work products developed by SUBAWARDEE hereunder shall be the property of the federal government, state, and County and shall be delivered to County by SUBAWARDEE upon completion of the Grant Activities. SUBAWARDEE may retain copies thereof for its files and internal use. Publication of the information directly derived from work performed or data obtained in connection with services rendered under this Agreement must first be approved in writing by County and state as applicable.

I. Property. Title to all nonexpendable and expendable tangible personal property purchased by the SUBAWARDEE with Grant Funds shall be deemed to have vested in the SUBAWARDEE upon purchase, in accordance with the provisions of 2 CRF 200, without further obligation. Title to any federally owned property remains vested in the federal government. No real property may be acquired with Grant Funds.

J. Reports. SUBAWARDEE shall submit the following reports and/or information electronically to County:

   i. *Quarterly Status Report*. This report form provided by County, is due 15 days after quarter end, shall keep the County informed of SUBAWARDEE activity and progress toward accomplishment of the objectives of the Grant Activities.

   ii. *Equipment Tracking*. SUBAWARDEE shall submit equipment information to County at least every 18 months, as required by 2 CFR 200. The equipment information must include a physical inventory report of all equipment that was purchased with the Grant Funds. SUBAWARDEE must report all equipment valued under $5,000 to County, and County approval is required to remove such equipment from the equipment inventory report. Equipment that is lost, stolen, or destroyed needs to be reported to County and may need to be replaced by SUBAWARDEE at SUBAWARDEE's sole expense.

4. GRANT FUND PAYMENT.

A. County shall process SUBAWARDEE's payment requests on a reimbursement basis. Grant Funds shall not be paid in advance. SUBAWARDEE shall submit payment requests quarterly, as provided below.

   i. Quarter 1 (January–March): Payment request due April 15

ii. Quarter 2 (April–June): Payment request July 15

iii. Quarter 3 (July–September): Payment request October 15

iv. Quarter 4 (October–December): Payment request January 15

With each payment request, SUBAWARDEE must provide supporting documentation reflecting actual costs incurred and associated Grant Activities performed and/or completed. Failure to meet the above deadlines and/or provide supporting documentation may result in payment delays.

B. Each payment request must include a certification, signed by an official who is authorized to legally bind the SUBAWARDEE, which reads as follows:

> "By signing this report, I certify to the best of my knowledge and belief that the report is true, complete, and accurate, and the expenditures, disbursements and cash receipts are for the purposes and objectives set forth in the terms and conditions of the Federal award. I am aware that any false, fictitious, or fraudulent information, or the omission of any material fact, may subject me to criminal, civil, or administrative penalties for fraud, false statements, and false claims otherwise. (U.S. Code Title 18, Section 1001 and Title 31, Sections 3729–3730 and 3801–3812)."

C. County will review each payment request from SUBAWARDEE and, if approved, submit the request to CalOES on behalf of SUBAWARDEE. CalOES may submit the request to FEMA for approval.

D. SUBAWARDEE understands and acknowledges that County does not control either the process for approving payment requests submitted to CalOES or CalOES's decision regarding the payment request. Responsibility for processing, approving, and making payment in connection with any payment request submitted by SUBAWARDEE lies exclusively with CalOES and County shall have no financial liability to SUBAWARDEE for CalOES's failure to process, approve, or make payment in connection with any payment request.

E. If the County becomes aware of any deficiencies in the payment request, County shall communicate the deficiencies to the SUBAWARDEE along with the corrective action necessary to allow County to submit the payment request to CalOES. SUBAWARDEE shall be responsible for correcting any deficiencies in the request.

F. When County receives Grant Funds from CalOES, County will process payment of Grant Funds to SUBAWARDEE. Because of the multiple agencies involved in reviewing and approving these payment requests, payment processing may take up to twelve (12) months.

5. DISGORGEMENT. SUBAWARDEE understands and acknowledges that its failure to comply with the requirements of this Agreement, including but not limited to its failure to comply with the rules and regulations governing the use of Grant Funds, may result in an audit or monitoring of SUBAWARDEE's use of the Grant Funds or SUBAWARDEE's compliance with the rules and regulations governing its use of Grant Funds, or both, by FEMA or CalOES. SUBAWARDEE further understands and acknowledges that the result of any such audit may be a demand by FEMA, CalOES, and/or County that SUBAWARDEE repay (disgorge) some or all of the Grant Funds.

SUBAWARDEE shall indemnify, defend, and hold harmless the County, its Board of Supervisors, officers, directors, agents, and employees from and against any and all claims, demands, actions, losses, liabilities, damages, and costs, including reasonable attorneys' fees, arising out of or resulting from a demand from FEMA or CalOES, or both, for repayment of some or all of the Grant Funds as a result of SUBAWARDEE's failure to comply with any term or condition of this Agreement.

6. NOTICES. Any notice, request, demand, or other communication required or authorized under this Agreement shall be deemed to be properly given when:

A. Delivered personally to the person below, as of the date of delivery; or

B. Mailed to the physical address listed below by U.S. Mail or similar service, with postage prepaid and properly addressed, as of the date of postmark; or

C. Emailed to the email address(es) below, as of the date a read receipt, an acknowledgement from the recipient, or other proof of delivery is received by the sender.

In the case of County, to:

Name, Title:	David Atkinson, Assistant Director of Emergency Services
Address:	2968 Richardson Dr. Auburn CA, 95603
Telephone:	530-886-5300
Email:	grants@placer.ca.gov

In the case of SUBAWARDEE, to:

Name, Title:	Dominick Casey, City Manager
Address:	311 Vernon Street Roseville, CA 95678
Telephone:	916-774-5362
Email:	CityManager@roseville.ca.us

7. TERMINATION AND ENFORCEMENT. This Agreement may be terminated by County if SUBAWARDEE materially fails to comply with the terms and conditions herein. Such termination shall be effective upon service of written notice of termination on SUBAWARDEE. As an alternative to termination, County may, in its sole and exclusive discretion, impose special conditions or take appropriate action as provided in 2 CFR 200 subpart D.

8. INDEMNIFICATION. SUBAWARDEE shall indemnify, defend, and hold harmless the County, its Board of Supervisors, officers, directors, agents, employees, and volunteers from and against any and all claims, demands, actions, losses, liabilities, damages, and costs, including reasonable attorneys' fees, arising out of or related to this Agreement. This obligation to indemnify will survive termination of this Agreement.

9. EXHIBITS; MERGER CLAUSE; AMENDMENTS. This Agreement, including all Exhibits and Attachments, incorporated herein by this reference, constitutes the sole Agreement between the Parties and correctly states the rights, duties, and obligations of each party as of this document's date. In the event that any term, condition, provision, requirement, or specification set forth in the body of this Agreement conflicts with or is inconsistent with any term, condition, provision,

requirement, or specification in any Exhibit and/or Attachment to this Agreement, the provisions of the body of the Agreement shall prevail. Any prior agreement, promises, negotiations, or representations between the parties not expressly stated in this document are not binding.

All subsequent modifications or amendments to this Agreement shall be in writing and signed by the parties.

10. SUCCESSORS AND ASSIGNS. This Agreement is to be binding on the successors of the parties hereto. The services called for herein are deemed unique and SUBAWARDEE shall not assign, transfer, or otherwise substitute its interest in this Agreement.

11. CONFLICT OF INTEREST. SUBAWARDEE certifies that it has no current business or financial relationship with any County employee or official, or other County contract provider that could create a conflict with this Agreement and will not enter into any such business or financial relationships during the period of this Agreement. SUBAWARDEE attests that its employees and the officers of its governing body shall avoid any actual or potential conflicts of interest, and that no officer or employee who exercises any functions or responsibilities in connection with this Agreement shall have any legally prohibited personal financial interest or benefit which either directly or indirectly arises out of this Agreement. SUBAWARDEE shall establish safeguards to prohibit employees or officers from using their positions for a purpose which could result in legally prohibited private gain or gives the appearance of being motivated for legally prohibited private gain for themselves or others, particularly those with whom they have family, business, or other ties. SUBAWARDEE certifies that no official or employee of the County, nor any business entity in which an official of the County has an interest, has been employed or retained to solicit or aid in the procuring of this Agreement. In addition, SUBAWARDEE agrees that no such person will be employed in the performance of this Agreement without immediately notifying the County.

12. VALIDITY OF ALL PARTS OF THE AGREEMENT. Should any part of this Agreement be declared by a final decision by a court or tribunal of competent jurisdiction to be unconstitutional, invalid or beyond the authority of either party to enter into or carry out, such decision shall not affect the validity of the remainder of this Agreement, which shall continue in full force and effect, provided that the remainder of this Agreement can be interpreted to give effect to the intentions of the parties.

13. GOVERNING STATE LAWS AND JURISDICTION. This Agreement is executed and intended to be performed in the State of California, and the laws of that State shall govern its interpretation and effect. Any legal proceedings on this agreement shall be brought under the jurisdiction of the Superior Court of the County of Placer, State of California. Each party waives any Federal court removal and/or original jurisdiction rights it may have.

14. WAIVERS IN PART. County's waiver of the performance of any covenant, condition, obligation, representation, warranty or promise in this Agreement shall not invalidate this Agreement or be deemed a waiver of any other covenant, condition, obligation, representation, warranty or promise. County's waiver of the time for performing any act or condition hereunder does not constitute a waiver of the act or condition itself.

15. INTERPRETATION. This Agreement shall be deemed to have been prepared equally by both of the parties, and the Agreement and its individual provisions shall not be construed or interpreted more favorably for one party on the basis that the other party prepared it.

16. DUPLICATE COUNTERPARTS; ELECTRONIC SIGNATURE. This Agreement may be executed in duplicate counterparts. Each counterpart shall be an original and both together shall constitute but one and the same document. This Agreement shall not be deemed executed unless and until at least one counterpart bears the signatures of all parties' designated signatories.

In addition, this Agreement and future documents relating to this Agreement may be digitally signed in accordance with California law. Any party to this Agreement may revoke such agreement to permit electronic signatures at any time in relation to all future documents by providing notice pursuant to this Agreement.

IN WITNESS WHEREOF, the parties hereto have caused their duly authorized representatives to execute this Agreement.

CITY OF ROSEVILLE ("SUBAWARDEE") *

_____
Signature

_____
Print Name

☐ Chair of the Board, ☐ President, or
☐ Vice President

Date: _____

_____
Signature

_____
Print Name

☐ Secretary, ☐ Asst. Secretary,
☐ Chief Financial Officer, or ☐ Asst. Treasurer

Date: _____

COUNTY OF PLACER ("COUNTY")

_____
David Atkinson, PE
Assistant Director of Emergency Services
Placer County Office of Emergency Services

Date: _____

Approved as to Form
Office of Placer County Counsel

_____

Date: _____

EXHIBITS:
Exhibit A: Scope of Grant Activities
Exhibit B: CalOES Standard Assurances
Exhibit C: County Resolution No. 2022-128
Exhibit D: SUBAWARDEE Resolution No. XXXXX

EXHIBIT A
SCOPE OF GRANT ACTIVITIES

See Attachment A

EXHIBIT B
CalOES STANDARD ASSURANCES

See Attachment B

EXHIBIT C
COUNTY RESOLUTION NO. 2022-128

See Attachment C

EXHIBIT D
SUBAWARDEE RESOLUTION NO. XXXXX

COUNTY OF Placer
EMERGENCY SERVICES

April 22, 2024

Troy Bergstrom, Chief of Police
City of Roseville Police Department
1051 Junction Blvd.
Roseville, CA 95678

DELIVERED VIA E-MAIL: tbergstrom@roseville.ca.us
CC'd: Jbeigh@roseville.ca.us; MCPeinado@roseville.ca.us

SUBJECT: **NOTIFICATION OF SUBAWARD**
Fiscal Year (FY) 2023 Homeland Security Grant Program (HSGP) Subaward #2023-0042
Subaward Period: 09/01/2023-05/31/2026

Dear Chief Bergstrom:

We are pleased to announce the approval of your FY 2023 HSGP subawards for the following project(s):

Project (Number): 003 Project Title: Roseville Police Department Tactical Medicine Training
Project Description: The Tactical Medicine Program allows for a rapid response of emergency medical support into critical incidents where traditional EMS resources will not respond.
Award Amount: $2,990

Project (Number): 004 Project Title: Roseville Police Department Magnified Optics Equipment
Project Description: Funding to outfit the members of the Rapid Containment Team (RTC) with magnifying optics.
Award Amount: $5,490

Project (Number): 005 Project Title: Roseville Police Department Night Vision/VR Equipment
Project Description: Funding to outfit SWAT team members with night vision/infrared capabilities for working in low light/night conditions.
Award Amount: $38,000

This subaward is subject to requirements in the attached agreement, including but not limited to the Federal Emergency Management Agency (FEMA) Notice of Funding Opportunity (NOFO), the California Supplement to the NOFO, the FEMA Preparedness Grants Manual, and the California Governor's Office of Emergency Services (CalOES) Standard Assurances for Federal Non-Disaster Grant Programs.

To accept this award, you are required to execute and return the enclosed agreement with all required attachments to the Placer County Office of Emergency Services at grants@placer.ca.gov within 60 days of the date of this notice. We can also facilitate electronic signature of the documents, upon request.

COUNTY OF Placer
EMERGENCY SERVICES

After we receive the document with your signatures, we will provide you with a fully executed copy. For further assistance, please contact Brandy Dunkel at bdunkel@placer.ca.gov or 530-308-3555.

Sincerely,

David Atkinson, PE
Assistant Director of Emergency Services
Placer County Office of Emergency Services

Encl.
Department of Homeland Security Subaward Grant Agreement

Standard Assurances
For Cal OES Federal Non-Disaster Grant Programs

As the duly authorized representative of the Applicant, I hereby certify that the Applicant has the legal authority to apply for federal assistance and the institutional, managerial, and financial capability (including funds sufficient to pay any non-federal share of project cost) to ensure proper planning, management, and completion of the project described in this application, within prescribed timelines.

The requirements outlined in these assurances apply to Applicant and any of its subrecipients.

I further acknowledge that the Applicant is responsible for reviewing and adhering to all requirements within the:

(a) Applicable Federal Regulations (see below);
(b) Federal Program Notice of Funding Opportunity (NOFO);
(c) Federal Preparedness Grants Manual;
(d) California Supplement to the NOFO; and
(e) Federal and State Grant Program Guidelines.

Federal Regulations
Government cost principles, uniform administrative requirements, and audit requirements for federal grant programs are set forth in Title 2, Part 200 of the Code of Federal Regulations (C.F.R.). Updates are issued by the Office of Management and Budget (OMB) and can be found at http://www.whitehouse.gov/omb/.

In the event Cal OES determines that changes are necessary to the subaward after a subaward has been made, including changes to period of performance or terms and conditions, Applicants will be notified of the changes in writing. Once notification has been made, any subsequent request for funds will indicate Applicant acceptance of the changes to the subaward.

State and federal grant award requirements are set forth below. The Applicant hereby agrees to comply with the following:

1. **Proof of Authority**
   The Applicant will obtain proof of authority from the city council, governing board, or authorized body in support of this project. This written authorization must specify that the Applicant and the city council, governing board, or authorized body agree:

Initials _____

(a) To provide all matching funds required for the grant project and that any cash match will be appropriated as required;
(b) Any liability arising out of the performance of this agreement shall be the responsibility of the Applicant and the city council, governing board, or authorized body;
(c) Grant funds shall not be used to supplant expenditures controlled by the city council, governing board, or authorized body;
(d) The Applicant is authorized by the city council, governing board, or authorized body to apply for federal assistance, and the institutional, managerial and financial capability (including funds sufficient to pay the non-federal share of project cost, if any) to ensure proper planning, management and completion of the project described in this application; and
(e) The official executing this agreement is authorized by the Applicant.

This Proof of Authority must be maintained on file and readily available upon request.

2. **Period of Performance**
The period of performance is specified in the Award. The Applicant is only authorized to perform allowable activities approved under the award, within the period of performance.

3. **Lobbying and Political Activities**
As required by Section 1352, Title 31 of the United States Code (U.S.C.), for persons entering into a contract, grant, loan, or cooperative agreement from an agency or requests or receives from an agency a commitment providing for the United States to insure or guarantee a loan, the Applicant certifies that:

(a) No federal appropriated funds have been paid or will be paid, by or on behalf of the undersigned, to any person for influencing or attempting to influence an officer or employee of an agency, a Member of Congress, an officer or employee of Congress, or an employee of a Member of Congress in connection with the awarding of any Federal contract, the making of any federal grant, the making of any federal loan, the entering into of any cooperative agreement, and the extension, continuation, renewal, amendment, or modification of any federal contract, grant, loan, or cooperative agreement.

Initials _____

(b) If any funds other than federal appropriated funds have been paid or will be paid to any person for influencing or attempting to influence an officer or employee of any agency, a Member of Congress, an officer or employee of Congress, or an employee of a Member of Congress in connection with this federal contract, grant, loan, or cooperative agreement, the undersigned shall complete and submit Standard Form-LLL, "Disclosure Form to Report Lobbying," in accordance with its instructions.

(c) The Applicant shall require that the language of this certification be included in the award documents for all subawards at all tiers (including subcontracts, subgrants, and contracts under grants, loans, and cooperative agreements) and that all subrecipients shall certify and disclose accordingly.

The Applicant will also comply with provisions of the Hatch Act (5 U.S.C. §§ 1501- 1508 and §§ 7324-7328) which limit the political activities of employees whose principle employment activities are funded in whole or in part with federal funds.

Finally, the Applicant agrees that federal funds will not be used, directly or indirectly, to support the enactment, repeal, modification or adoption of any law, regulation or policy without the express written approval from the California Governor's Office of Emergency Services (Cal OES) or the federal awarding agency.

4. Debarment and Suspension

As required by Executive Orders 12549 and 12689, and 2 C.F.R. § 200.214 and codified in 2 C.F.R. Part 180, Debarment and Suspension, the Applicant will provide protection against waste, fraud, and abuse by debarring or suspending those persons deemed irresponsible in their dealings with the federal government. The Applicant certifies that it and its subrecipients:

(a) Are not presently debarred, suspended, proposed for debarment, declared ineligible, or voluntarily excluded from covered transactions by any federal department or agency;

(b) Have not within a three-year period preceding this application been convicted of or had a civil judgment rendered against them for commission of fraud or a criminal offense in connection with obtaining, attempting to obtain, or performing a public (federal, state, or local) transaction or contract under a public transaction; violation of federal or state antitrust statutes or commission of embezzlement, theft, forgery, bribery, falsification or destruction of records, making false statements, or receiving stolen property;

Initials _____

(c) Are not presently indicted for or otherwise criminally or civilly charged by a governmental entity (federal, state, or local) with commission of any of the offenses enumerated in paragraph (4)(b) of this certification; and
(d) Have not within a three-year period preceding this application had one or more public transaction (federal, state, or local) terminated for cause or default.

Where the Applicant is unable to certify to any of the statements in this certification, he or she shall attach an explanation to this application.

5. Non-Discrimination and Equal Employment Opportunity
The Applicant will comply with all state and federal statutes relating to non-discrimination, including:

(a) Title VI of the Civil Rights Act of 1964 (Public Law (P.L.) 88-352 and 42 U.S.C. § 2000d et. seq.) which prohibits discrimination on the basis of race, color, or national origin and requires that recipients of federal financial assistance take reasonable steps to provide meaningful access to persons with limited English proficiency (LEP) to their programs and services;
(b) Title IX of the Education Amendments of 1972, (20 U.S.C. §§ 1681-1683, and 1685-1686), which prohibits discrimination on the basis of sex in any federally funded educational program or activity;
(c) Section 504 of the Rehabilitation Act of 1973, (29 U.S.C. § 794), which prohibits discrimination against those with disabilities or access and functional needs;
(d) Americans with Disabilities Act (ADA) of 1990 (42 U.S.C. § 12101et seq.), which prohibits discrimination on the basis of disability and requires buildings and structures be accessible to those with disabilities and access and functional needs;
(e) Age Discrimination Act of 1975, (42 U.S.C. §§ 6101-6107), which prohibits discrimination on the basis of age;
(f) Public Health Service Act of 1912 (42 U.S.C. §§ 290 dd—2), relating to confidentiality of patient records regarding substance abuse treatment;
(g) Title VIII of the Civil Rights Act of 1968 (42 U.S.C. § 3601 et seq.), relating to nondiscrimination in the sale, rental or financing of housing as implemented by the Department of Housing and Urban Development at 24 C.F.R. Part100. The prohibition on disability discrimination includes the requirement that new multifamily housing with four or more dwelling units—i.e., the public and common use areas and individual apartment units (all units in buildings with elevators and ground-floor units in buildings without elevators)—

be designed and constructed with certain accessible features (See 24 C.F.R. § 100.201);

(h) Executive Order 11246, which prohibits federal contractors and federally assisted construction contractors and subcontractors, who do over $10,000 in Government business in one year from discriminating in employment decisions on the basis of race, color, religion, sex, sexual orientation, gender identification or national origin;

(i) Executive Order 11375, which bans discrimination on the basis of race, color, religion, sex, sexual orientation, gender identification, or national origin in hiring and employment in both the United States federal workforce and on the part of government contractors;

(j) California Public Contract Code § 10295.3, which prohibits discrimination based on domestic partnerships and those in same sex marriages;

(k) Department of Homeland Security (DHS) policy to ensure the equal treatment of faith-based organizations, under which the Applicant must comply with equal treatment policies and requirements contained in 6 C.F.R. Part 19;

(l) The Applicant will comply with California's Fair Employment and Housing Act (FEHA) (California Government Code §§12940-12957), as applicable. FEHA prohibits harassment and discrimination in employment because of ancestry, familial status, race, color, religious creed (including religious dress and grooming practices), sex (which includes pregnancy, childbirth, breastfeeding and medical conditions related to pregnancy, childbirth or breastfeeding), gender, gender identity, gender expression, sexual orientation, marital status, national origin, ancestry, mental and physical disability, genetic information, medical condition, age, pregnancy, denial of medical and family care leave, or pregnancy disability leave, military and veteran status, and/or retaliation for protesting illegal discrimination related to one of these categories, or for reporting patient abuse in tax supported institutions;

(m) Any other nondiscrimination provisions in the specific statute(s) under which application for federal assistance is being made; and

(n) The requirements of any other nondiscrimination statute(s) that may apply to this application.

6. Drug-Free Workplace

As required by the Drug-Free Workplace Act of 1988 (41 U.S.C. § 701 et seq.),the Applicant certifies that it will maintain a drug-free workplace and a drug-free awareness program as outlined in the Act.

Initials _____

7. Environmental Standards

The Applicant will comply with state and federal environmental standards, including:

(a) California Environmental Quality Act (CEQA) (California Public Resources Code §§ 21000-21177), to include coordination with the city or county planning agency;
(b) CEQA Guidelines (California Code of Regulations, Title 14, Division 6, Chapter 3, §§ 15000-15387);
(c) Federal Clean Water Act (CWA) (33 U.S.C. § 1251 et seq.), which establishes the basic structure for regulating discharges of pollutants into the waters of the United States and regulating quality standards for surface waters;
(d) Federal Clean Air Act of 1955 (42 U.S.C. § 7401) which regulates air emissions from stationary and mobile sources;
(e) Institution of environmental quality control measures under the National Environmental Policy Act (NEPA) of 1969 (P.L. 91-190); the Council on Environmental Quality Regulations for Implementing the Procedural Provisions of NEPA; and Executive Order 12898 which focuses on the environmental and human health effects of federal actions on minority and low-income populations with the goal of achieving environmental protection for all communities;
(f) Evaluation of flood hazards in floodplains in accordance with Executive Order 11988;
(g) Executive Order 11514 which sets forth national environmental standards;
(h) Executive Order 11738 instituted to assure that each federal agency empowered to enter into contracts for the procurement of goods, materials, or services and each federal agency empowered to extend federal assistance by way of grant, loan, or contract shall undertake such procurement and assistance activities in a manner that will result in effective enforcement of the Clean Air Act and the Federal Water Pollution Control Act Executive Order 11990 which requires preservation of wetlands;
(i) The Safe Drinking Water Act of 1974, (P.L. 93-523);
(j) The Endangered Species Act of 1973, (P.L. 93-205);
(k) Assurance of project consistency with the approved state management program developed under the Coastal Zone Management Act of 1972 (16 U.S.C. §§1451 et seq.);
(l) Conformity of Federal Actions to State (Clear Air) Implementation Plans under Section 176(c) of the Clean Air Act of 1955, as amended (42 U.S.C. §§7401 et seq.); and

(m) Wild and Scenic Rivers Act of 1968 (16 U.S.C. § 1271 et seq.) related to protecting components or potential components of the national wild and scenic rivers system.

The Applicant shall not be: (1) in violation of any order or resolution promulgated by the State Air Resources Board or an air pollution district; 2) subject to a cease-and-desist order pursuant to section 13301 of the California Water Code for violation of waste discharge requirements or discharge prohibitions; or 3) determined to be in violation of federal law relating to air or water pollution.

8. **Audits**
For subrecipients expending $750,000 or more in federal grant funds annually, the Applicant will perform the required financial and compliance audits in accordance with the Single Audit Act Amendments of 1996 and 2 C.F.R., Part 200, Subpart F Audit Requirements.

9. **Cooperation and Access to Records**
The Applicant must cooperate with any compliance reviews or investigations conducted by DHS. In accordance with 2 C.F.R. § 200.337, the Applicant will give the awarding agency, the Comptroller General of the United States and, if appropriate, the state, through any authorized representative, access to and the right to examine all records, books, papers, or documents related to the award. The Applicant will require any subrecipients, contractors, successors, transferees and assignees to acknowledge and agree to comply with this provision.

10. **Conflict of Interest**
The Applicant will establish safeguards to prohibit the Applicant's employees from using their positions for a purpose that constitutes or presents the appearance of personal or organizational conflict of interest, or personal gain.

11. **Financial Management**
False Claims for Payment - The Applicant will comply with 31 U.S.C §§ 3729-3733 which provides that Applicant shall not submit a false claim for payment, reimbursement, or advance.

12. **Reporting - Accountability**
The Applicant agrees to comply with applicable provisions of the Federal Funding Accountability and Transparency Act (FFATA) (P.L. 109-282), including but not limited to (a) the reporting of subawards obligating $30,000 or more in federal funds,

and (b) executive compensation data for first-tier subawards as set forth in 2 C.F.R. Part 170, Appendix A. The Applicant also agrees to comply with the requirements set forth in the government-wide financial assistance award term regarding the System for Award Management and Universal Identifier Requirements located at 2 C.F.R. Part 25, Appendix A.

13. Whistleblower Protections

The Applicant must comply with statutory requirements for whistleblower protections at 10 U.S.C. § 2409, 41 U.S.C. § 4712, and 10 U.S.C. § 2324, 41 U.S.C. § 4304 and § 4310.

14. Human Trafficking

The Applicant will comply with the requirements of Section 106(g) of the Trafficking Victims Protection Act of 2000, as amended (22 U.S.C. § 7104) which prohibits the Applicant or its subrecipients from: (1) engaging in trafficking in persons during the period of time that the award is in effect; (2) procuring a commercial sex act during the period of time that the award is in effect; or (3) using forced labor in the performance of the award or subawards under the award.

15. Labor Standards

The Applicant will comply with the following federal labor standards:

(a) The Davis-Bacon Act (40 U.S.C. §§ 276a to 276a-7), as applicable, and the Copeland Act (40 U.S.C. § 3145 and 18 U.S.C. § 874) and the Contract Work Hours and Safety Standards Act (40 U.S.C. §§ 327-333), regarding labor standards for federally-assisted construction contracts or subcontracts, and

(b) The Federal Fair Labor Standards Act (29 U.S.C. § 201 et seq.) as they apply to employees of institutes of higher learning (IHE), hospitals and other non-profit organizations.

16. Worker's Compensation

The Applicant must comply with provisions which require every employer to be insured to protect workers who may be injured on the job at all times during the performance of the work of this Agreement, as per the workers compensation laws set forth in California Labor Code §§ 3700 et seq.

17. Property-Related

If applicable to the type of project funded by this federal award, the Applicant will:

(a) Comply with the requirements of Titles II and III of the Uniform Relocation Assistance and Real Property Acquisition Policies Act of 1970 (P.L. 91-646)

which provide for fair and equitable treatment of persons displaced or whose property is acquired as a result of federal or federally-assisted programs. These requirements apply to all interests in real property acquired for project purposes regardless of federal participation in purchase;

(b) Comply with flood insurance purchase requirements of Section 102(a) of the Flood Disaster Protection Act of 1973 (P.L. 93-234) which requires federal award subrecipients in a special flood hazard area to participate in the program and to purchase flood insurance if the total cost of insurable construction and acquisition is $10,000 or more;

(c) Assist the awarding agency in assuring compliance with Section 106 of the National Historic Preservation Act of 1966, as amended (16 U.S.C. § 470), Executive Order 11593 (identification and protection of historic properties), and the Archaeological and Historic Preservation Act of 1974 (16U.S.C. § 469a-1 et seq.); and

(d) Comply with the Lead-Based Paint Poisoning Prevention Act (42 U.S.C. § 4831 and 24 CFR Part 35) which prohibits the use of lead-based paint in construction or rehabilitation of residence structures.

18. Certifications Applicable Only to Federally-Funded Construction Projects

For all construction projects, the Applicant will:

(a) Not dispose of, modify the use of, or change the terms of the real property title or other interest in the site and facilities without permission and instructions from the awarding agency. Will record the federal awarding agency directives and will include a covenant in the title of real property acquired in whole or in part with federal assistance funds to assure nondiscrimination during the useful life of the project;

(b) Comply with the requirements of the awarding agency with regard to the drafting, review and approval of construction plans and specifications; and

(c) Provide and maintain competent and adequate engineering supervision at the construction site to ensure that the complete work conforms with the approved plans and specifications and will furnish progressive reports and such other information as may be required by the assistance awarding agency or State.

19. Use of Cellular Device While Driving is Prohibited

The Applicant is required to comply with California Vehicle Code sections 23123 and 23123.5. These laws prohibit driving motor vehicle while using an electronic wireless communications device to write, send, or read a text-based communication.

Drivers are also prohibited from the use of a wireless telephone without hands-free listening and talking, unless to make an emergency call to 911, law enforcement, or similar services.

20. California Public Records Act and Freedom of Information Act

The Applicant acknowledges that all information submitted in the course of applying for funding under this program, or provided in the course of an entity's grant management activities that are under Federal control, is subject to the Freedom of Information Act (FOIA), 5 U.S.C. § 552, and the California Public Records Act, California Government Code §7920.000 et seq. The Applicant should consider these laws and consult its own State and local laws and regulations regarding the release of information when reporting sensitive matters in the grant application, needs assessment, and strategic planning process.

HOMELAND SECURITY GRANT PROGRAM (HSGP) – PROGRAM SPECIFIC ASSURANCES / CERTIFICATIONS

21. Acknowledgment of Federal Funding from DHS

The Applicant must acknowledge its use of federal funding when issuing statements, press releases, requests for proposals, bid invitations, and other documents describing projects or programs funded in whole or in part with federal funds.

22. Activities Conducted Abroad

The Applicant must ensure that project activities carried on outside the United States are coordinated as necessary with appropriate government authorities and that appropriate licenses, permits, or approvals are obtained.

23. Best Practices for Collection and Use of Personally Identifiable Information (PII)

DHS defines personally identifiable information (PII) as any information that permits the identity of an individual to be directly or indirectly inferred, including any information that is linked or linkable to that individual. If the Applicant collects PII, the Applicant is required to have a publicly-available privacy policy that describes standards on the usage and maintenance of PII they collect. The Applicant may refer to the DHS Privacy Impact Assessments: Privacy Guidance and Privacy template as a useful resource.

Initials _____

24. Copyright

The Applicant must affix the applicable copyright notices of 17 U.S.C. §§ 401 or 402 and an acknowledgement of United States Government sponsorship (including the award number) to any work first produced under federal financial assistance awards.

25. Duplication of Benefits

Any cost allocable to a particular federal financial assistance award provided for in 2 C.F.R. Part 200, Subpart E may not be charged to other federal financial assistance awards to overcome fund deficiencies, to avoid restrictions imposed by federal statutes, regulations, or federal financial assistance award terms and conditions, or for other reasons. However, these prohibitions would not preclude the Applicant from shifting costs that are allowable under two or more awards in accordance with existing federal statutes, regulations, or the federal financial assistance award terms and conditions.

26. Energy Policy and Conservation Act

The Applicant must comply with the requirements of 42 U.S.C. § 6201 which contain policies relating to energy efficiency that are defined in the state energy conservation plan issued in compliance with this Act.

27. Federal Debt Status

The Applicant is required to be non-delinquent in its repayment of any federal debt. Examples of relevant debt include delinquent payroll and other taxes, audit disallowances, and benefit overpayments. See OMB Circular A-129.

28. Fly America Act of 1974

The Applicant must comply with Preference for United States Flag Air Carriers: (air carriers holding certificates under 49 U.S.C. § 41102) for international air transportation of people and property to the extent that such service is available, in accordance with the International Air Transportation Fair Competitive Practices Act of 1974 (49 U.S.C. § 40118) and the interpretative guidelines issued by the Comptroller General of the United States in the March 31, 1981, amendment to Comptroller General Decision B-138942.

29. Hotel and Motel Fire Safety Act of 1990

In accordance with Section 6 of the Hotel and Motel Fire Safety Act of 1990, the Applicant must ensure that all conference, meeting, convention, or training space funded in whole or in part with federal funds complies with the fire prevention and control guidelines of the Federal Fire Prevention and Control Act of 1974, as amended, 15 U.S.C. § 2225a.

30. Non-supplanting Requirement

If the Applicant receives federal financial assistance awards made under programs that prohibit supplanting by law, the Applicant must ensure that federal funds do not replace (supplant) funds that have been budgeted for the same purpose through non- federal sources.

31. Patents and Intellectual Property Rights

Unless otherwise provided by law, the Applicant is subject to the Bayh-Dole Act, Pub. L. No. 96-517, as amended, and codified in 35 U.S.C. § 200 et seq. The Applicant is subject to the specific requirements governing the development, reporting, and disposition of rights to inventions and patents resulting from financial assistance awards located at 37 C.F.R. Part 401 and the standard patent rights clause located at 37 C.F.R. § 401.14.

32. SAFECOM

If the Applicant receives federal financial assistance awards made under programs that provide emergency communication equipment and its related activities, the Applicant must comply with the SAFECOM Guidance for Emergency Communication Grants, including provisions on technical standards that ensure and enhance interoperable communications.

33. Terrorist Financing

The Applicant must comply with Executive Order 13224 and United States law that prohibit transactions with, and the provisions of resources and support to, individuals and organizations associated with terrorism. The Applicant is legally responsible for ensuring compliance with the Order and laws.

34. Reporting of Matters Related to Recipient Integrity and Performance

If the total value of the Applicant's currently active grants, cooperative agreements, and procurement contracts from all federal assistance offices exceeds $10,000,000 for any period of time during the period of performance of this federal financial assistance award, the Applicant must comply with the requirements set forth in the government-wide Award Term and Condition for Recipient Integrity and Performance Matters located at 2 C.F.R. Part 200, Appendix XII, the full text of which is incorporated here by reference in the award terms and conditions.

Initials _____

35. USA Patriot Act of 2001

The Applicant must comply with requirements of the Uniting and Strengthening America by Providing Appropriate Tools Required to Intercept and Obstruct Terrorism Act (USA PATRIOT Act), which amends 18 U.S.C. §§ 175-175c.

36. Use of DHS Seal, Logo, and Flags

The Applicant must obtain permission from their DHS Financial Assistance Office, prior to using the DHS seal(s), logos, crests or reproductions of flags or likenesses of DHS agency officials, including use of the United States Coast Guard seal, logo, crests or reproductions of flags or likenesses of Coast Guard officials.

37. Performance Goals

In addition to the Biannual Strategy Implementation Report submission requirements outlined in the Preparedness Grants Manual, the Applicant must demonstrate how the grant-funded project addresses the core capability gap associated with each project and identified in the Threat and Hazard Identification and Risk Analysis or Stakeholder Preparedness Review or sustains existing capabilities, as applicable. The capability gap reduction or capability sustainment must be addressed in the Project Description of the BSIR for each project.

38. Applicability of DHS Standard Terms and Conditions to Tribes

The DHS Standard Terms and Conditions are a restatement of general requirements imposed upon the Applicant and flow down to any of its subrecipients as a matter of law, regulation, or executive order. If the requirement does not apply to Indian tribes or there is a federal law or regulation exempting its application to Indian tribes, then the acceptance by Tribes of, or acquiescence to, DHS Standard Terms and Conditions does not change or alter its inapplicability to an Indian tribe. The execution of grant documents is not intended to change, alter, amend, or impose additional liability or responsibility upon the Tribe where it does not already exist.

39. Required Use of American Iron, Steel, Manufactured Products, and Construction Materials

The Applicant must comply with the "Build America, Buy America" Act (BABAA), enacted as part of the Infrastructure Investment and Jobs Act and Executive Order 14005. Applicants receiving a federal award subject to BABAA requirements may not use federal financial assistance funds for infrastructure projects unless:

(a) All iron and steel used in the project are produced in the United States – this means all manufacturing processes, from the initial melting stage through the application of coatings, occurred in the United States;

(b) All manufactured products used in the project are produced in the United States – this means the manufactured product was manufactured in the United States; and the cost of the components of the manufactured product that are mined, produced, or manufactured in the United States is greater than 55 percent of the total cost of all components of the manufactured product, unless another standard for determining the minimum amount of domestic content of the manufactured product has been established under applicable law or regulation; and
(c) All construction materials are manufactured in the United States – this means that all manufacturing processes for the construction material occurred in the United States.

The "Buy America" preference only applies to articles, materials, and supplies that are consumed in, incorporated into, or affixed to an infrastructure project. It does not apply to tools, equipment, and supplies, such as temporary scaffolding, brought to the construction site and removed at or before the completion of the infrastructure project. Nor does a "Buy America" preference apply to equipment and furnishings, such as movable chairs, desks, and portable computer equipment, that are used at or within the finished infrastructure project but are not an integral part of the structure or permanently affixed to the infrastructure project.

Per section 70914(c) of BABAA, FEMA may waive the application of a "Buy America" preference under an infrastructure program in certain cases.

On July 1, 2022, OMB approved FEMA's General Applicability Public Interest Waiver of the BABAA requirements to be effective for a period of six months, through January 1, 2023. Applicants will not be required to follow the BABAA requirements for FEMA awards made, and any other funding FEMA obligates, during this waiver period. For any new awards FEMA makes after January 1, 2023, as well as new funding FEMA obligates to existing awards or through renewal awards where the new funding is obligated after January 1, 2023, Applicants will be required to follow the BABAA requirements unless another waiver is requested and approved.

40. Advancing Effective, Accountable Policing and Criminal Justice Practice to Enhance Public Trust and Public Safety

The Applicant must comply with the requirements of section 12(c) of Executive Order 14074. The Applicant is also encouraged to adopt and enforce policies consistent with Executive Order 14074 to support safe and effective policing.

Initials _____

Standard Assurances
For Cal OES Federal Non-Disaster Grant Programs

IMPORTANT
The purpose of these assurances is to obtain federal and state financial assistance, including any and all federal and state grants, loans, reimbursement, contracts, etc. Applicant recognizes and agrees that state financial assistance will be extended based on the representations made in these assurances. These assurances are binding on Applicant, its successors, transferees, assignees, etc. as well as any of its subrecipients. Failure to comply with any of the above assurances may result in suspension, termination, or reduction of grant funds.

All appropriate documentation, as outlined above, must be maintained on file by the Applicant and available for Cal OES or public scrutiny upon request. Failure to comply with these requirements may result in suspension of payments under the grant or termination of the grant or both and the Applicant may be ineligible for award of any future grants if Cal OES determines that the Applicant: (1) has made false certification, or (2) violates the certification by failing to carry out the requirements as noted above.

All of the language contained within this document must be included in the award documents for all subawards at all tiers. Applicants are bound by DHS Standard Terms and Conditions 2023, Version 2, hereby incorporated by reference, which can be found at: https://www.dhs.gov/publication/fy15-dhs- standard-terms-and-conditions.

The undersigned represents that he/she is authorized to enter into this agreement for and on behalf of the Applicant.

Applicant:_____

Signature of Authorized Agent: _____

Printed Name of Authorized Agent: _____

Title:_____Date: _____

Initials _____

Before the Board of Supervisors
County of Placer, State of California

In the matter of: A RESOLUTION DESIGNATING COUNTY STAFF TO PERFORM ALL ACTIONS NECESSARY TO OBTAIN AND EXECUTE THE 2022, 2023, AND 2024 HOMELAND SECURITY GRANT PROGRAMS (HSGP)

Resolution No.: 2022-128

The following Resolution was duly passed by the Board of Supervisors of the County of Placer at a regular meeting held June 21, 2022, by the following vote on roll call:

Ayes: GORE, HOLMES, JONES, GUSTAFSON

Noes: NONE

Absent: WEYGANDT

Signed and approved by me after its passage.

Chair, Board of Supervisors

Attest:

Clerk of said Board

WHEREAS, the County of Placer is a subgrantee of the State of California for the Federal Homeland Security Grant Program (HSGP) which is managed by the California Governor's Office of Emergency Services (Cal OES); and

WHEREAS, CalOES requires the Board of Supervisors designate staff to perform all actions necessary to obtain and execute the 2022, 2023, and 2024 HSGP; and

WHEREAS, the Board confirms that the County Executive Officer, Deputy County Executive Officer, Assistant Director of Emergency Services, and Staff Services Manager are the appropriate designees to complete activities related to the administration of the HSGP.

BE IT RESOLVED, by the Board of Supervisors that the designated staff are authorized to perform all actions required to obtain and manage funds for the entirety of 2022, 2023, and 2024 HSGP performance periods. The foregoing Resolution was duly passed and adopted by the Board of Supervisors for the County of Placer, State of California at the regular meeting of the Board of Supervisors on June 21, 2022 by the vote listed above.

Attachment: Exhibit 1 – Governing Body Resolution

Governing Body Resolution

BE IT RESOLVED BY THE County of Placer Board of Supervisors
(Governing Body)

OF THE Placer County Office of Emergency Services *THAT*
(Name of Applicant)

County Executive Officer *OR*
(Name or Title of Authorized Agent)

Deputy County Executive Officer *OR*
(Name or Title of Authorized Agent)

Assistant Director of Emergency Services *OR*
(Name or Title of Authorized Agent)

Staff Services Manager .
(Name or Title of Authorized Agent)

is hereby authorized to execute for and on behalf of the named applicant, a public entity established under the laws of the State of California, any actions necessary for the purpose of obtaining federal financial assistance provided by the federal Department of Homeland Security and subgranted through the State of California.

Passed and approved this 21st day of June , 2022

Certification

I, Megan Wood , duly appointed and
(Name)

Clerk of the Board of the County of Placer
(Title) (Governing Body)

do hereby certify that the above is a true and correct copy of a resolution passed and approved by

the Board of Supervisors of the County of Placer on the
(Governing body) (Name of Applicant)

21st day of June , 2022

Placer County Clerk of the Board
(Official Position)

(Signature)

June 21, 2022
(Date)

ORDINANCE NO. 6858

ORDINANCE OF THE COUNCIL OF THE CITY OF ROSEVILLE AUTHORIZING CERTAIN AMENDMENTS TO THE FISCAL YEAR 2024-25 BUDGET AND DECLARING THIS ORDINANCE TO BE IMMEDIATELY EFFECTIVE AS AN APPROPRIATION MEASURE

THE CITY OF ROSEVILLE ORDAINS:

SECTION 1. The City of Roseville Annual Budget, Fiscal Year 2024-25, is hereby amended as listed on the attached budget adjustment for the Public Safety 2023 Homeland Security Grant Program (Police).

SECTION 2. This ordinance is hereby declared to be an appropriation measure, immediately effective pursuant to the provisions of Section 5.03 of the Charter.

SECTION 3. The City Clerk is hereby authorized and directed to post a true copy of the foregoing ordinance in each of three (3) conspicuous locations in the City and she shall immediately after such posting enter in the ordinance book, under the record of the ordinance, a certificate under her hand stating the time and place of such publication by posting.

PASSED AND ADOPTED by the Council of the City of Roseville, this _____day of_____, 2024, by the following vote on roll call:

AYES COUNCILMEMBERS:

NOES COUNCILMEMBERS:

ABSENT COUNCILMEMBERS:

_____
MAYOR

ATTEST:

_____
City Clerk

REQUEST FOR BUDGET ADJUSTMENT

Updated 5/24/2024

REQUESTER NAME & TITLE:	Mark Peinado / Management Analyst	FISCAL YEAR:	2024-25
PREPARER NAME & TITLE:	Mark Peinado / Management Analyst	COUNCIL DATE (if applicable):	08/21/24
DEPARTMENT/DIVISION:	Police Department	ORDINANCE:	

EXPENDITURES/EXPENSES/TRANSFERS OUT

ACCOUNT STRING				BUDGET ($)	DESCRIPTION
Fund	Account	Center	Project	Adjustment	
2270	6587	84001	700067	43,490	Increase to Capital Outlay - Equipment for Magnified Optics & Night/Infrared equipment
2270	5461	84001	700067	2,990	Increase to Training and Development for Tactical Medicine training
EXPENDITURES/EXPENSES/TRANSFERS OUT TOTAL				46,480	

REVENUES/TRANSFERS IN

ACCOUNT STRING				BUDGET ($)	DESCRIPTION
Fund	Account	Center	Project	Adjustment	
2270	4401	84001	700067	46,480	Increase to 2023 Homeland Security Grant Program revenue budget
REVENUES/TRANSFERS IN TOTAL				46,480	

NET ADJUSTMENT	-	

FUND BALANCE

ACCOUNT STRING				BUDGET ($)	DESCRIPTION
Fund	Account	Center	Project	Adjustment	
	3601	00000	000000		
	3601	00000	000000		
	3601	00000	000000		
	3601	00000	000000		
	3601	00000	000000		
	3601	00000	000000		
FUND BALANCE TOTAL				-	

Justification for Budget Adjustment:

Staff recommends that Council authorize the establishment of a new Capital Improvement Project - the FY2023 Homeland Security Grant Program - Police Project (the "Project"), and adopt an ordinance to approve a budget adjustment appropriating $46,480 in the Grants fund to the project for the purchase of magnified optics and night/infrared equipment for the department's SWAT Team and to send members to a tactical medicine training course. The Police Department has been given approval from Placer County Office of Emergency Services (OES) to purchase equipment with funding allocated from the federal Homeland Security Grant Program. Placer County OES administers the grant, files reimbursement claims from the federal government, and then distributes the reimbursement to local agencies. This budget adjustment will not have an impact on the General Fund.

COUNCIL COMMUNICATION

CC #: 3505
File #: 0800-05

Title:	Citywide East Site Radio Communications Tower Project - Award of Contract and Budget Adjustment
Contact:	Karl Grover 916-774-5145 kgrover@roseville.ca.us

Meeting Date: 8/21/2024
Item #: 7.20.

RECOMMENDATION TO COUNCIL

Staff recommends that the City Council:

1) Approve award of the East Site Construction RFQ to the lowest responsible bidder, SLC, Inc.;
2) Adopt a resolution to approve an agreement with SLC, Inc. for the Citywide East Site Radio Communications Tower project, and authorize the City Manager to execute it on behalf of the City, and authorize a 15% contingency to cover costs of unanticipated changes to scope or schedule and ensure successful completion of the project; and
3) Adopt an ordinance to approve a budget adjustment in the amount of $1,287,594 to provide adequate funding to pay for all costs including equipment and services beyond site construction.

BACKGROUND

Radio transmission is the primary communication method for the City's emergency services and many of the daily operations providers (i.e., Police, Fire, Public Works, Parks, Recreation and Libraries, Roseville Electric, Roseville Transit, and Environmental Utilities), as well as outside agencies during mutual aid incidents. The City's radio system handles approximately 1.5 million transmissions per year and therefore ensuring adequate coverage throughout the City is crucial.

Roseville currently operates two other 180-foot radio communications towers. One is in west Roseville near the Roseville Energy Park and the second is in central Roseville at the Police Department building on Junction Boulevard. The east side of Roseville is currently served by radio equipment located on the 3rd floor of a commercial building in a leased electrical closet. As previously described to City Council at the September 7, 2022 meeting, the current east radio site has many limitations and needs to be relocated to a new site that will improve its reliability, availability, capacity and coverage. The City's Information Technology and Economic Development staff coordinated the efforts to explore opportunities to provide enhanced radio coverage on the east side of Roseville. Following an extensive evaluation, the City-owned 2001 Strauch Drive site was chosen for the location of a new radio communications facility to accommodate the relocated equipment.

Consultants were acquired to develop plans for the 2001 Strauch Drive site and completed the required environmental clearance. On September 7, 2022, Council adopted the Initial Study/Mitigated Negative Declaration (IS/MND), IS/MND Mitigation Monitoring and Reporting Plan (MMRP), and approved agreements for acquisition of permanent and temporary easements allowing access to the site. Subsequent to Council's action, the easements have been acquired and the plans submitted for building and civil improvement permits. On December 6, 2023 Council provided approval to accept the project's plans and specifications as well as proceed with a call for construction bids.

The proposed East Site Radio Communications Relocation Project facility will include a 180-foot radio communication tower, an equipment shelter, backup generator, propane tank to service the generator, security cameras and lighting, a graveled chain link fence enclosure area, and an access road via the adjacent commercial center at 1700 Rocky Ridge Drive. The plans and specifications for the project are attached in the Project Manual.

Public outreach on this project has occurred in several ways. News of the project was previously provided in the various City news outlets including the City's website, emailed in the City News and Business Matters newsletters, and posted on the City's Twitter and Facebook pages. Postcards were sent out to the Sierra Gardens (inactive) neighborhood property owners and an article was published in the adjacent Maidu Neighborhood Association newsletter. City staff also presented the project at a RCONA Board meeting and a Maidu Neighborhood Association meeting prior to the September 2022 Council hearing. Additionally, the required CEQA noticing was provided to owners and tenants of properties within 500 feet of the project site. The project has also been added to the list of Current Projects on the City's website and signage identifying the future communications tower has been posted on the project site.

Installation of a new radio communications site in the east side of Roseville is essential to support emergency services and daily operations. Staff anticipates construction could begin in late summer 2024, dependent on weather, availability of materials and contractor schedules. Once the project has been completed, IT staff will coordinate transfer and optimization of the existing radio communications equipment to the new location on the tower and within the equipment shelter.

FISCAL IMPACT

The recommended budget adjustment is needed to increase the budget for the East Radio Site Communications Tower project. The project scope consists of site construction, tower, shelter, generator, propane tank, grounding, tree removal, bird survey, United Auburn Indian Council observation, City staff labor, fiber connectivity, power, cameras, lights, network equipment, spectrum analyzer, antenna systems, microwave dish link to the PD site, new radio equipment, system simulcast alignment, decommissioning of the old East radio site and a 15% contingency to ensure successful site construction and optimization.

The existing project budget of $1,677,712 is funded by the Strategic Improvement Fund, the Public Facilities Fund, and the Information Technology Replacement Fund. The $1,287,594 budget adjustment is funded by an increase of $462,092 from the Strategic Improvement Fund and $825,502 from the Information Technology Replacement Fund, bringing the revised project budget to $2,965,306. Adequate funds are available in both the IT Replacement and Strategic Improvement Funds. Once the project is complete, the ongoing site maintenance will be included

in the annual Information Technology Operations Fund budget.

ENVIRONMENTAL REVIEW

Council approval of construction is an action that is subject to CEQA. Project level CEQA compliance for the (Citywide) East Site Radio Communications Relocation Project was accomplished with preparation of the Initial Study/Mitigated Negative Declaration (IS/MND), adopted by City Council on September 7, 2022 (SCH No. 2022070353).

CITY COUNCIL STRATEGIC PLAN/OVERARCHING GOALS

Goal C: Maintain Safe and Healthy Communities – Providing a connected and reliable radio communication service for the east side of Roseville supports emergency and daily operations in the City and assists in maintaining a safe and healthy community.

Goal E: Deliver Exceptional City Services – Many City services (i.e., Police, Fire, Utilities, Transit, etc.) depend daily on the radio system for efficient and effective communications as part of each department's service delivery.

Goal F: Invest in Well-Planned Infrastructure and Growth – This site is an investment in the City's technological infrastructure and will be scalable for future growth.

Respectfully Submitted,

Karl Grover, Information Technology Program Manager

Hong Sae, Chief Information Officer

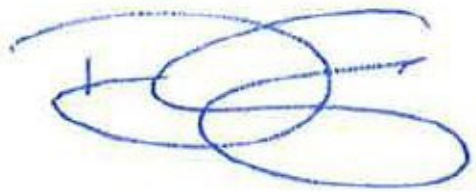

_____

Dominick Casey, City Manager

ATTACHMENTS:

Description

Resolution 24-302

Agreement

Project Manual- 1a

Project Manual - 1b

Project Manual - 2

Project Manual - 3

Project Manual - 4

Project Manual - 5

Ordinance 6856

RESOLUTION NO. 24-302

APPROVING AN AGREEMENT, BY AND BETWEEN THE CITY OF ROSEVILLE AND SLC, INC., AND AUTHORIZING THE CITY MANAGER TO EXECUTE IT ON BEHALF OF THE CITY OF ROSEVILLE

WHEREAS, an Agreement for the Citywide East Site Radio Communications Tower project, by and between the City of Roseville and SLC, Inc., has been reviewed by the City Council; and

NOW, THEREFORE, BE IT RESOLVED by the Council of the City of Roseville that said Agreement is hereby approved and that the City Manager is authorized to execute it on behalf of the City of Roseville, upon receipt and approval of the required bonds by the City Attorney's office.

BE IT FURTHER RESOLVED that the City Manager or his designee is authorized to approve change orders for the project, consistent with the contract terms, provided that the net cost of all change orders shall not exceed fifteen percent (15%) of the contract price.

PASSED AND ADOPTED by the Council of the City of Roseville this____day of _____, 2024, by the following vote on roll call:

AYES COUNCILMEMBERS:

NOES COUNCILMEMBERS:

ABSENT COUNCILMEMBERS:

_____
MAYOR

ATTEST:

_____
City Clerk

A G R E E M E N T

THIS AGREEMENT, is made and entered into this 6th day of August, 2024, by and between the City of Roseville, a municipal corporation, ("CITY"), and SLC, Inc. _____, a _____Corporation_____, ("CONTRACTOR"); and

W I T N E S S E T H:

WHEREAS, the City Council of the CITY, at a meeting held on the 24th day of August, 2024, approved plans and specifications for the _____ _____Citywide East Site Radio Communication Tower – Re-bid (Construction)_____

and directed the City Clerk to advertise for sealed proposals for doing said work and providing that bids be submitted on the __13th___ day of _May_____, 20__24___; and

WHEREAS, the City Clerk, thereafter duly and regularly caused a notice to be published in the manner and for the time prescribed by law; and

WHEREAS, CONTRACTOR, pursuant to the provisions of said notice duly filed a bid with the City Clerk, a true copy of which bid is now on file in the office of the City Clerk, and is hereby referred to and by this reference made a part hereof as fully as if set forth at length herein; and

WHEREAS, all bids received pursuant to said notice were opened and examined and publicly declared at the time specified in said advertisement for bids and at a meeting of the City Council held on the 24th day of August 2024, the Council found and declared the bid of

CONTRACTOR to be the lowest responsible bid and thereupon awarded a contract to CONTRACTOR to do the work referred to in the aforementioned specifications.

NOW, THEREFORE, the parties agree as follows:

1. THE WORK. CONTRACTOR agrees:

a. To do the work and furnish all the labor, materials, tools, supplies, equipment, superintendence, insurance, and bonds required for the __construction of the Citywide East Site Radio Communication Tower – based on the specifications and addenda issued as part of the re-bid RFQ# 15-022 in accordance with the Contract Documents (the Work).

b. To do and perform the Work contemplated hereby in a good and workmanlike manner under the direction of and to the satisfaction of the Director of Public Works of the City of Roseville.

2. PAYMENT. CITY shall pay CONTRACTOR __Nine hundred twenty-five thousand, twenty-eight and (00/100) dollars ($_925,028.00_____) for the Work to be done under this Agreement in accordance with the Contract Documents.

3. CONTRACT DOCUMENTS. The complete Agreement between the parties hereto consists of the following documents:

a. The advertisement for bids (including the notice to bidders, instructions to bidders and proposals);

b. The accepted bid;

c. Plans and specifications (including standard construction specifications, special provisions and construction details);

d. Bonds and insurance required by the specifications; and

e. This contract.

All documents specified above are intended to operate so that any work called for in any one and not mentioned in the other, or vice versa, is to be executed the same as if mentioned in all said documents.

4. LIQUIDATED DAMAGES. In the event CONTRACTOR does not complete the Work within the time specified, CONTRACTOR agrees that CITY will suffer damages. Inasmuch as the actual damages which would result from such breach by CONTRACTOR under this Agreement are uncertain, and would be impractical or extremely difficult to fix, CONTRACTOR agrees that it shall pay, or CITY shall deduct from CONTRACTOR's fee, the amount of $__3,000__ per day as liquidated damages, in the event of such delay.

5. TIME OF COMPLETION. Time is of the essence of this Agreement. CONTRACTOR shall complete all Work under the Contract Documents within _180__ Days of the date of this Contract. CONTRACTOR shall begin work by the date specified in the "Notice to Proceed" letter and shall diligently prosecute all of the Work under this Contract in all parts and requirements as defined in the Contract Documents.

6. SERVICE OF NOTICE. Any notice required or permitted to be given under this Agreement shall be deemed given when (a) personally delivered to the recipient identified below; (b) mailed by registered or certified mail, return receipt requested, postage pre-paid, to the address specified below; or (c) sent by facsimile, with confirmation of receipt, to the facsimile number identified below.

CITY OF ROSEVILLE	CONTRACTOR
Andre Baranov 2005 Hilltop Circle Roseville, CA 95747 AJBaranov@Roseville.CA.US (916) 774-5342	SLC Inc. Chad Mathisen 871 Cotting Court Suite I Vacaville, CA 95688 chad@slcinc.biz (916) 759-5781

CITY may also act through either its architect or construction manager if CITY expressly gives notice to CONTRACTOR, in writing, that CITY's designee has authority to act for CITY in a specific capacity.

7. DISPUTES. Disputes arising from this Agreement will be determined in accordance with the Contract Documents and Public Contract Code Sections 10240-10240.13.

8. GOVERNING LAW. This Agreement shall be governed by and construed in accordance with the laws of the State of California.

9. INDEPENDENT CONTRACTOR. CONTRACTOR shall act as an independent contractor, and covenants and agrees that it will conduct itself consistent with such status, that it will neither hold itself out as, nor claim to be, an officer or employee of CITY by reason of this Agreement.

10. SUCCESSORS IN INTEREST. This Agreement shall be binding upon the heirs, successors, executors, administrators and assigns of the respective parties hereto.

11. MODIFICATION. This Agreement and each provision contained herein may be waived, amended, supplemented or eliminated only by mutual written agreement of the parties.

12. SEVERABILITY. If any of the provisions contained in this Agreement are for any reason held invalid or unenforceable, such holding shall not affect the remaining provisions or the validity and enforceability of the Agreement as a whole.

13. INTEGRATED AGREEMENT. This is an integrated agreement and contains all of the terms, considerations, understanding and promises of the parties. It shall be read as a whole.

14. CONTRACTORS LICENSE LAW. CONTRACTORS ARE REQUIRED BY LAW TO BE LICENSED AND REGULATED BY THE CONTRACTORS' STATE LICENSE BOARD WHICH HAS JURISDICTION TO INVESTIGATE COMPLAINTS AGAINST CONTRACTORS IF A COMPLAINT REGARDING A PATENT ACT OR OMISSION IS FILED WITHIN FOUR (4) YEARS OF THE DATE OF THE ALLEGED VIOLATION. A COMPLAINT REGARDING A LATENT ACT OR OMISISON PERTAINING TO STRUCUTRAL DEFECTS MUST BE FILED WITHIN TEN (10) YEARS OF THE DATE OF THE ALLEGED VIOLATION. ANY QUESTIONS CONCERNING A CONTRACTOR MAY BE REFERRED TO THE REGISTRAR, CONTRACTORS' STATE LICENSE BOARD, P.O. BOX 26000, SACRAMENTO, CALIFORNIA 95826.

IN WITNESS WHEREOF, the City of Roseville, a municipal corporation, has authorized the execution of this Agreement in duplicate by its City Manager and attestation by its City Clerk under authority of Resolution No. _____, adopted by the Council of the City of Roseville on the ____day of _____, 20_____, and CONTRACTOR has caused this Agreement to be duly executed.

CITY OF ROSEVILLE, a municipal corporation

BY: _____
DOMINICK CASEY
City Manager

ATTEST:

BY: _____
CARMEN AVALOS
City Clerk

APPROVED AS TO FORM:

BY: _____
MICHELLE SHEIDENBERGER
City Attorney

APPROVED AS TO SUBSTANCE:

BY: _____
JASON SHYKOWSKI
Public Works Director

SLC Inc., a California Corporation

BY: _____
CHAD MATHISEN
President

BY: _____
JASON WOHLGEMUTH
Secretary

Buildings & Grounds Project Manual

Name of project:

Citywide East Site Radio Communications Tower – Re-bid

Department:

Information Technology, Economic Development, and Public Works Facilities

CITY OF ROSEVILLE CALIFORNIA

TABLE OF CONTENTS

	Pagination Notation
Notice to Contractors	NTC
Instructions to Bidders	INT
Proposal	PROP
Insurance Broker Information Packet	INS
General Conditions for Buildings and Grounds	GC
Supplemental Conditions	SC
Specifications	SPEC
Drawings	DRAW
Assembly Bill No. 626	AB 626
Geotechnical Report	GEO
Mitigation and Monitoring Reporting Program	MMRP
Initial Study/Mitigated Negative Declaration	ISMND
Updated Site Transformer	RE-TX
Special Inspections Application	SP-I

CITY OF ROSEVILLE

DEPARTMENTS OF INFORMATION TECHNOLOGY AND ECONOMIC DEVELOPMENT

Name of Project: Citywide East Site Radio Communications Tower

NOTICE TO CONTRACTORS

NOTICE IS HEREBY GIVEN THAT sealed Proposals will be received at the Office of the City Clerk, 311 Vernon Street, Roseville, California, until May 13th, 2024 at 3:00 p.m. Late Proposals will be rejected. No exceptions.

The Proposals will be publicly opened and read by the City Clerk or designee of the City of Roseville at 3:05 p.m. on May 13th, 2024 at the Office of the City Clerk located at 311 Vernon Street, Roseville California for the following project:

Citywide East Site Radio Communications Tower.

A pre-bid meeting will be held at 2001 Strauch Drive. Roseville, CA 95661: on April 26th, 2024 at 10:00 AM. No late attendance will be accepted.

A Project Manual, including all Contract Documents and the Proposal forms for bidding this project, may be obtained on-line from the City of Roseville's website at https://www.roseville.ca.us/business/procurement_services/bids_rfps. All communications relative to this project shall be conducted through Public Purchase.

Bids shall be submitted on the City's Proposal Forms included in the Project Manual, plainly endorsed with the Bidder's name together with signed acknowledgement of any and all addenda.

Proposal Forms shall be securely sealed in a suitable envelope marked with the name and address of the Bidder, and marked in capital letters on the front and back of the envelope as follows:

East Site Radio Communication Tower Project

(Name of Bidder)

(Address of Bidder)

Whether mailed or personally delivered, all bids shall be addressed to the City of Roseville, Office of the City Clerk, 311 Vernon Street, Roseville, California, 95678.

Each bid must be accompanied by a Bid Guaranty in the form of a Certificate of Deposit, Certified or Cashier's Check, Bidder's Bond or Irrevocable Standby Letter of Credit in an amount equal to at least ten percent (10%) of the Bidder's Grand Total Price. The Bid Guaranty will be retained by the City and applied to any and all damages sustained by the City in the event that the successful Bidder fails or refuses to enter into the Contract awarded to it and to furnish all required bonds and Certificates of Insurance. The City intends to award the Contract to the lowest responsible Bidder based on the Grand Total Bid Price for all components of the Project. To the extent allowed by law, the City reserves the right to reject any and all bids and/or to waive any irregularities or informalities in any bid or in the bidding procedure. The City specifically reserves the right to not award the Contract after the opening of bids.

Any bid may be withdrawn at any time prior to the time fixed in the public notice for the deadline submission of bids only by written request for the withdrawal of the bid filed with the City Clerk. The request shall be executed by the Bidder or his or her duly authorized representative. The withdrawal of a bid does not prejudice the right of the Bidder to file a new bid by the submission deadline. Whether or not bids are opened exactly at the time fixed in the

public notice for opening bids, a bid will not be received after the deadline submission of bids nor may any bid be withdrawn after the time fixed in the public notice for deadline for submission of bids. Immediately following the deadline for submission of bids all bids shall become the property of the City of Roseville and the City is under no obligation to return bids.

Bids will be examined and reported to the City Council within sixty (60) business days after the bid opening. Except as permitted by applicable law, no Bidder may withdraw its bid for a period of sixty (60) business days after the date of bid opening. Each Bidder will be notified of any award of the Contract by the City.

The City will affirmatively ensure non-discrimination on the basis of one or more of the following: race, religious creed, color, national origin, ancestry, physical disability, mental disability, medical condition, genetic information, marital status, sex, age, sexual orientation, or military and veteran status in the award and administration of contracts that it awards.

Pursuant to Public Contract Code Section 22300, the successful Bidder may submit certain securities in lieu of the City withholding retention of payments during the Project.

The City has determined that the Contractor shall possess a valid Class A, or B, General Engineering, or General Building Contractor's license at the time that the bid is submitted, as well as any other license classification as may be required by the laws of the California for the performance of the work specified in the Contract Documents. Said license shall be maintained during the Contract period. Failure to possess the specified license shall render the bid nonresponsive and will act as a bar to the award of the Contract to any Bidder not possessing such a license at the time of bid submittal. The Contractor shall provide certification of the license, its number and the expiration date on the proposal form.

The work is to be done in Placer County. Pursuant to California Labor Code Section

1773, the City has ascertained the General Prevailing Rate of Wages in the County in which the work is to be done to be as determined by the Director of Industrial Relations of the State of California. The Contractor is hereby made aware that information regarding prevailing wage rates may be obtained from the State Department of Industrial Relations and/or the following website address: http://www.dir.ca.gov/dlsr/DPreWageDetermination.htm. The Contractor is required to post a copy of the applicable wage rates at the job site. Attention is directed to Section 5 "Legal Relations and Responsibility" of the General Conditions.

Pursuant to Labor Code Section 1771.1(b), notice is hereby given that a contractor or subcontractor shall not be qualified to bid on, be listed in a bid proposal, subject to the requirements of Section 4104 of the Public Contract Code, or engage in the performance of any contract for public work, as defined in Labor Code Sections 1720, et seq., unless currently registered and qualified to perform public work pursuant to Labor Code Section 1725.5 or exempt from registration requirements pursuant to Labor Code Section 1725.5(f). It is not a violation of Labor Code Section 1771.1 for an unregistered contractor to submit a bid that is authorized by Section 7029.1 of the Business and Professions Code or by Section 10164 or 20103.5 of the Public Contract Code, provided the contractor is registered to perform work pursuant to Labor Code Section 1725.5 at the time the contract is awarded or is exempt from registration requirements pursuant to Labor Code Section 1725.5(f). The Contractor is hereby notified that this project is subject to compliance monitoring and enforcement by the Department of Industrial Relations.

All questions prior to the deadline for bid submissions shall be directed to the attention of Gina McColl/Andre Baranov/Rebecca McCoy via Public Purchase at https://www.roseville.ca.us/rfp . The deadline for submissions of questions and clarifications

regarding the Contract Documents is 20 calendar days before the deadline for bid submissions. Only Addenda issued by the City are binding.

Note that this RFQ is being re-issued removing from the prior-issued scope the contracting obligations of the contractor to obtain their own special inspections consultant. The City will provide their own special inspections, contractor will be responsible to coordinate special inspections only.

_____

Andre Baranov, City of Roseville

Dated: _____

Published: 01/24/2024

INSTRUCTIONS TO BIDDERS

SECTION 1. GENERAL

1-1.01 **GENERAL.** These Instructions to Bidders form a part of the Contract Documents. Capitalized terms are defined in the General Conditions Section 1.

1-1.02 **EXAMINATION OF PLANS, CONTRACT DOCUMENTS AND SITE OF THE WORK.** The Bidder shall examine carefully the site of the Work and all the Contract Documents, including these Instructions to Bidders, and shall inform itself of the conditions relating to the execution of the Work. Failure to do so will not relieve the successful Bidder of its obligation to enter into an Agreement and complete the Work in strict accordance with the Contract Documents. Conditions relating to the execution of the Work include the requirements of federal, state, and local laws, statutes and ordinances relative to the execution of Work, including, but not limited to, applicable regulations concerning prevailing wage rates, non-discrimination in the employment of labor, protection of the public, employee health and safety, and environmental protection.

The submission of a bid shall be conclusive evidence that the Bidder has investigated and is satisfied as to the conditions to be encountered, as to the character, quality, and scope of Work to be performed, the quantities of materials to be furnished, and as to the requirements of all the Contract Documents.

1-1.03 **EXISTING INFORMATION.** Where the Department has made investigations of site conditions, including subsurface conditions in areas where Work is to be performed under the Contract, such investigations are made only for the purpose of study and design. City does not represent that such conditions as found in these investigations or inferences or conclusions drawn as a result of these investigations will represent actual site

conditions and hereby disclaims any liability as a result of Contractor's or Bidder's reliance on such investigations. City will presume that all Bidders have conducted their own site investigations, including investigations of subsurface conditions. Where such investigations have been made, Bidders or Contractors may, upon written request, inspect the records of the Department as to such investigations subject to the conditions set forth in these Instructions to Bidders. Such inspection of records may be made only at the location noted above. The records of such investigations are not a part of the Contract Documents and are shown solely for the convenience of the Bidder or Contractor. The City assumes no responsibility whatsoever with respect to the sufficiency or accuracy of the investigations made, the records thereof, or of the interpretations set forth therein or made by the City in its use thereof. The City makes no warranty or guarantee, either express or implied, that the conditions indicated by such investigations or records are representative of those existing throughout such areas, or any part thereof, or that unforeseen developments may not occur, or that materials other than, or in proportions different from those indicated, may not be encountered.

No information derived from such inspection of records of investigations or compilation thereof made by the City, the Department or from the Engineer, or his or her assistants, will in any way relieve the Bidder or Contractor from properly examining the site and making such additional investigations as it may elect, or from properly fulfilling the terms of the Contract.

SECTION 2: BID REQUIREMENTS

2-1.01 **PROPOSAL FORMS.** The Department will furnish to each Bidder standard Proposal Forms, which, when filled out and executed may be submitted as the bid. Proposals shall include all pages in the Project Manual with page numbers marked "PROP" plus the Addendum acknowledgment form (front sheet) from all Addenda received by the Bidder. Proposals shall be removed from the Project Manual. The full Project Manual shall not be submitted with the proposal. Bids not presented on forms so furnished will be disregarded.

The Proposal and one (1) copy thereof shall be submitted as directed in the "Notice to Contractors" under sealed cover plainly marked as a Proposal, and identifying the project to which the Proposal relates and the date of the bid opening therefor. Proposals which are not properly marked may be disregarded.

All blank spaces in the Proposal must be completed, as required, in ink. All price information shall be shown, clearly legible, in figures where required.

The Bidder shall sign the Proposal in the blank space provided therefor. If the Bidder is the sole owner, the Proposal shall be signed by the owner. If the Bidder is a corporation, the legal name of the corporation and its State of incorporation shall be set forth and the Proposal shall be signed by at least two officers authorized to sign contracts on behalf of the corporation. If the Bidder is a partnership, the true name of the firm shall be set forth, the names and addresses of all partners shall be given and the Proposal shall be signed by a partner in the firm authorized to sign contracts on behalf of the partnership. If the Bidder is a joint venture, the Proposal shall be signed on behalf of each participating company by officers or other individuals who have the full and proper authorization to do so. If the Proposal is signed by an agent of the Bidder other than an officer of a corporation or a member of a partnership, a notarized Power of

Attorney must be on file with the City prior to opening of bids or must be submitted with the Proposal. If requested by the City, the Bidder shall promptly submit evidence satisfactory to the City of the authority of the person signing the Proposal.

2-1.02 **SUBMISSION OF BIDS.** Bids must be submitted at the prescribed time and location specified in the Notice to Contractors. Any submission received after the prescribed time shall be rejected, regardless of whether or not bids are opened exactly at the prescribed time.

Any unauthorized conditions or qualifications entered on, or changes made to, the Proposal may render it invalid and may cause its rejection.

No telegraphic, telephonic, or facsimile or other electronically transmitted bids will be considered.

2-1.03 **REQUIRED LISTING OF PROPOSED SUBCONTRACTORS.** Each Proposal shall list the name, address and Contractor license number of each Subcontractor to whom the Bidder proposes to subcontract portions of the Work in an amount in excess of one-half of one percent (0.5%) of its total bid, in accordance with Section 4100 to 4114, inclusive, of the Public Contract Code for the State of California. The Bidder shall list the Subcontractor's license number and the portion of the Work that will be done by each Subcontractor. If the Bidder fails to specify a Subcontractor for any portion of the Work, the Bidder agrees to perform that portion of the Work itself, and represents that it is qualified to perform that portion of the Work itself. The Bidder's attention is invited to other provisions of the Public Contract Code related to the imposition of penalties for a failure to observe its provisions by using unauthorized Subcontractors or by making unauthorized substitutions.

2-1.04 **CONTRACTOR'S LICENSING LAWS.** Attention is directed to the

provisions of Business and Professions Code Chapter 9 of Division 3 concerning the licensing of Contractors.

All Bidders at the time of bid submittal shall be licensed as Contractors in accordance with the laws of this State. Any Bidder or Contractor not so licensed is subject to the penalties imposed by such laws. The form of Contractor's license required is stated in the Notice to Contractors, provided that the City makes no representation as to whether the State may require other or additional licenses. It is the Bidder's and Contractor's responsibility to obtain the correct Contractor's licenses. Bidders shall be skilled and regularly engaged in the general class or type of Work called for under this Contract.

All Bidders and Contractors, including Subcontractors, shall have a current City business license before undertaking any Work.

2-1.05 **NONCOLLUSION DECLARATION.** By submitting a bid, the Bidder represents and warrants that such bid is genuine and not a sham or collusive or made in the interest or on the behalf of any person therein named, and that the Bidder has not, directly or indirectly, included or solicited any other Bidder to put in a sham bid, or any other person, firm, or corporation to refrain from bidding, and that the Bidder has not in any manner sought collusion to secure the Bidder an advantage over any other Bidder.

Bidders shall submit a properly completed and executed "Noncollusion Declaration" in the form required by Public Contract Code Section 7106 and provided with the Proposal (PROP-11).

2-1.06 **DISQUALIFICATION, REMOVAL OR OTHER PREVENTION OF BIDDING.** A bid may be rejected on the basis of a Bidder, any officer of such Bidder, or any employee of such Bidder who has a proprietary interest in such Bidder, having been disqualified,

removed, or otherwise prevented from bidding on, or completing a federal, state, or local project because of a violation of law or a safety regulation.

2-1.07 **PROPOSAL GUARANTY.** All bids shall be accompanied by one of the following forms of Bidder's security: Cash, a cashier's check, a certified check, or a Bidder's bond executed by an admitted California surety insurer, made payable to the City of Roseville, or any other form of security deemed acceptable by the City Attorney. The security shall be in an amount equal to at least ten percent (10%) of the amount bid. A bid will not be considered unless one of the form of Bidder's security is enclosed with it.

A Bidder's bond shall conform to the City's bond form in the Proposal and shall be properly filled out and executed.

2-1.08 **SCHEDULE OF BID PRICES.** Bidders are directed to submit unit and lump sum prices for all Work set forth in the Contract Documents on the Proposal Form entitled "Schedule of Bid Prices."

Unit prices and lump sum prices, as indicated, must be entered in the appropriate spaces provided in the Schedule of Bid Prices. If applicable, unit prices shall be multiplied by the quantities shown, and the total shall be inserted in the Amount column. In the event of any error or discrepancy between the unit price and the calculated amount, the unit prices shall govern. The City may correct any mathematical errors apparent on the face of the bid.

The amounts shown in the Amount column must be added together in arriving at the Grand Total Bid Price.

Amounts for Allowance bid items must be entered in the exact amount in the Amount column.

The prices included within the Schedule of Bid Prices shall include all costs for labor,

materials, tools, equipment, services, Subcontractors, suppliers, taxes, insurance, shipment, delivery, overhead, profit, and all other costs necessary to perform the Work in accordance with the Contract Documents.

The Grand Total Bid Price shall be indicated in the Summary table form included with the Schedule of Bid Prices. The Grand Total Bid Price shall be the sum of the amounts bid for each of the designated portions of the Work, as more specifically described on the Schedule of Bid Prices form itself.

Full compensation for complying with the Contract Documents, including requirements of the Standard Specifications, the General Conditions, Supplemental Conditions, and all warranties, shall be considered included in the bid items and no additional compensation shall be allowed therefor.

Full compensation for completion of all work as shown on the plans, as specified in the Specifications, and as directed by the City, shall be considered included in the bid items and no additional compensation shall be allowed.

Bidders are strongly discouraged from submitting unbalanced bids. As used herein, the term “unbalanced bid” is defined as any bid that does not include a reasonable proportionate allocation of indirect costs and profit of each bid item indicated in the Schedule of Bid Prices. The City reserves the right to reject any unbalanced bid if the City determines that there is a reasonable doubt that an acceptance of the bid will not result in the lowest ultimate cost to the City with regard to the work or a disproportionate distribution of contract funds.

The City reserves the right to delete any bid item in its entirety and/or significantly reduce the quantity of Work under a bid item. The City makes no representation that any Work under a bid item will be performed during the course of the Project or that the Work will be

performed at the quantities included in the Schedule of Bid Prices. As provided in the General Conditions, for any deleted Work, Contractor shall not be entitled to payment of the indirect costs and profit included for said bid item. All bid items shall be considered distinct and severable from the remaining bid items, and each Bidder acts at its peril if its bid is unbalanced.

The City shall compare bids on the basis of the Grand Total Bid Price, which includes the base bid and any alternates designated on the Schedule of Bid Prices. Alternates may or may not be awarded, or may be awarded in any combination, at the City's discretion.

2-1.09 **WITHDRAWAL OF PROPOSALS.** Any bid may be withdrawn at any time prior to the time fixed in the Notice to Contractors for the opening of bids, provided that a request in writing, executed by the Bidder or its duly authorized representative, for the withdrawal of such bid is filed with the City Clerk. Facsimile and electronic mail requests are not acceptable. The withdrawal of a bid shall not prejudice the right of a Bidder to file a new bid. The withdrawal of any bid after the time fixed in the Notice to Contractors for the opening of bids will not be permitted.

2-1.10 **ADDENDUM.** Proposals shall include all costs and account for all Addenda issued prior to opening of bids. The Bidder is responsible for verifying that all issued Addenda have been received. An Addendum acknowledgment form for each Addendum shall be included as part of the Proposal submittal.

2-1.11 **PUBLIC OPENING OF PROPOSALS.** Proposals will be publicly opened and read at the time and place indicated in the Notice to Contractors. Bidders or their authorized agents are invited to be present.

2-1.12 **TRENCHING AND EXCAVATION WORK.** In accordance with the provisions of California Labor Code Section 6707, if the Work involves construction of a

pipeline, sewer, sewage disposal system, boring or jacking pits, or similar trenches or open excavations, which are five feet (5') or deeper, each bid submitted shall contain, as a bid item, adequate sheeting, shoring, and bracing, or equivalent method, for the protection of life or limb, which shall conform to all applicable safety orders.

SECTION 3: EVALUATION OF BIDS

3-1.01 **BID EVALUATION PROCESS.** Bids will be evaluated to determine the apparent low Bidder. The apparent low Bidder will be determined on the basis of the Grand Total Bid Price, as shown in the Schedule of Bid Prices. If additive or deductive alternates are used in the Schedule of Bid Prices, the apparent low Bidder will be the Bidder with the lowest total of the bid prices for base contract items plus the alternates designated by the City as those that will be used for determining the lowest bid price. However, the City reserves the right to (1) not award any alternates or (2) award any combination of alternates.

In case of discrepancy between the total of the base contract items and any specified alternates and the stated Grand Total Bid Price, the total of the base contract items plus specified alternates shall prevail. Any mathematical errors that appear on the face of the bid will be corrected by the City and the City will use the mathematically corrected addition. For example, if the mathematical total of Bidder's base contract items plus specified alternates equals $1,000,000, but the Bidder has written $1,250,000 as the Grand Total Bid Price, the City will consider $1,000,000 to be the Bidder's Grand Total Bid Price for purposes of comparison to other Bidders and actual bid award. The City reserves its rights to reject or accept bids based on discrepancies between the stated Grand Total Bid Price and the actual mathematical total of the base contract bid items, plus specified alternates.

3-1.02 **REJECTION OF IRREGULAR PROPOSALS.** Proposals may be rejected in the City's sole discretion if they show any alterations of form, additions not called for, conditional bids, incomplete bids, erasures, or irregularities of any kind. However, the City reserves the right to waive any minor irregularities and informalities in any bid or in the bid procedure for any reason.

3-1.03 **COMPETITIVE BIDDING.** If more than one proposal is offered by any individual, firm, partnership, corporation, association, or any combination thereof, under the same or different names, all such proposals may be rejected. A party who has quoted prices on materials or Work to a Bidder is not thereby disqualified from quoting prices to other Bidders, or from submitting a bid directly for the materials or Work.

All Bidders are put on notice that any collusive agreement to control or affect the awarding of this Contract is in violation of the competitive bidding requirements of the City Charter, State Contract Act and the Business and Professions Code and may render void any Contract let under such circumstances.

3-1.04 **RELIEF OF BIDDERS.** If the Bidder claims a mistake was made in its bid, the Bidder shall give the Department written notice within five (5) Days after the opening of the bids of the alleged mistake, specifying in the notice in detail how the mistake occurred. No relief from a claimed mistaken bid shall be granted unless such mistake clearly appears on the face of the bid submitted to the City. Claimed mistakes on backup worksheets, spreadsheets, computerized bidding programs, or any other similar calculative bidding mistake which is not apparent on the face of the bid shall not under any circumstance be considered as a basis for relief. The burden of proving the occurrence of a mistake entitling a Bidder to relief from its bid rests entirely on the Bidder. Relief from bids shall be in the City's sole discretion.

SECTION 4: AWARD AND EXECUTION OF CONTRACT

4-1.01 **AWARD OF CONTRACT.** The City reserves the right to reject any and all proposals and to award (or not award) any combination of bid items at its option. Any such award will be to the lowest responsible Bidder whose proposal complies with the requirements prescribed for the bid items awarded. Such award, if made, will be made within sixty (60) business days after the opening of the proposals. If the lowest responsible Bidder refuses or fails to execute the Contract, or provide an acceptable Performance Bond, Payment Bond, and insurance certificate(s), the City may award the Contract to the second lowest responsible Bidder. Such award, if made, will be made within eighty-two (82) business days after the opening of proposals. If the second lowest responsible Bidder refuses or fails to execute the Contract, or provide an acceptable Performance Bond, Payment Bond, and insurance certificate(s), the City may award the Contract to the third lowest responsible Bidder. Such award, if made, will be made within one hundred four (104) business days after the opening of the proposals. The above time periods within which the award of Contract may be made are subject to extension for such further period as may be agreed upon in writing between the City and the Bidder concerned.

4-1.02 **RETURN OF BIDDER'S SECURITIES.** Within ten (10) Days after the award of the Contract, the City Clerk will return all Bidders' securities, other than Bidders' bonds, accompanying the proposals that are not to be further considered in making the award. Retained Bidders' securities will be held until the Contract has been fully executed, after which all Bidders' securities, except Bidders' bonds and any Bidders' securities that have been forfeited, will be returned.

4-1.03 **CONTRACT BONDS.** The successful Bidder shall furnish two (2)

bonds in the form contained in the section entitled Insurance Broker Information Packet and Bonds. One (1) bond shall secure the payment of the claims of laborers, mechanics or materialmen employed on the Work under the Contract, and the other bond shall guarantee the faithful performance of the Contract.

Each of the two (2) bonds shall be in a sum equal to one hundred percent (100%) of the Contract Price. If the Contract Price increases by the issuance of Change Orders, the penal amounts of the bonds required shall increase accordingly. Sureties on each of said bonds shall be satisfactory to the City.

All alterations, extensions of time, extra and additional Work, and other changes authorized by the Standard Specifications, the General Conditions, the Supplemental Conditions or any part of the Contract may be made without securing the consent of the surety or sureties on the Contract bonds.

Furthermore, the successful Bidder shall furnish a certificate from the County Clerk as required by California Civil Code of Procedure Section 995.660(a)(3).

4-1.04 **INSURANCE.** At the time of the execution of the Contract, the Contractor shall, at its own expense, procure, and at all times during the prosecution of the Work maintain in full force and effect Worker's Compensation Insurance, and Liability Insurance as specified in the General Conditions. The Contractor shall provide a Certificate of Insurance in the form contained in the section entitled Insurance Broker Information Packet.

4-1.05 **EXECUTION OF CONTRACT.** The Contract shall be signed by the successful Bidder and returned, together with all the required Contract bonds and insurance certificates, within fifteen (15) Days after the Contract has been awarded, or as otherwise directed, in writing, by the City.

If the Bidder is an individual, the Contract shall be executed personally by the Bidder. If the Bidder is a partnership, it is desirable that the Contract be executed by all of the partners, but it may be executed by one of them. If the Bidder is a corporation, it must be executed by two officers of the corporation consisting of (1) the chairman of the board, president or vice president; and (2) the secretary, assistant secretary, chief financial officer, treasurer or assistant treasurer, or by a person authorized by the corporation to execute written contracts on its behalf, and the corporate seal affixed thereto. In the alternative, a person other than an officer may sign the Contract, provided evidence satisfactory to the City is provided indicating the individual's authority to bind the corporation. If the corporate seal is not affixed to the Contract, or if it is executed by a person other than officers, or only by one officer, there must be attached to the Contract a certified copy of a resolution of the corporation authorizing such officer or person to execute written contracts for and on behalf of the corporation. If the Bidder is a joint venture, the Contract must be executed on behalf of each participating firm by officers or other individuals who have the full and proper authorization to do so.

4-1.06 **FAILURE TO EXECUTE CONTRACT.** Failure of the lowest responsible Bidder, the second lowest responsible Bidder, or the third lowest responsible Bidder to execute the Contract and file acceptable bonds and insurance as provided within fifteen (15) Days after the Contract has been awarded, or as otherwise directed, in writing, by the City, shall be just cause for annulment of the award and forfeiture of the Bidder's security. The successful Bidder may file with the City Clerk a written notice, signed by the Bidder or Bidder's authorized representative, specifying that the Bidder will refuse to execute the Contract if presented to Bidder. The filing of such notice shall have the same force and effect as the failure of the Bidder to execute the Contract and furnish acceptable bonds within the time prescribed.

SECTION 5: BID PROTEST PROCEDURES

5-1.01 **POLICY/PROCEDURES.** It is the policy of the City to consider fully and adjudicate promptly protests filed by prospective Bidders relating to the City's bidding procedure or award of the Contract. Protests shall be filed and processed in accordance with Section 4.12.150 of the Roseville Municipal Code. A Bidder's failure to follow the bid protest procedures may result in rejection of the protest by the City.

PROPOSAL TO THE DEPARTMENT OF PUBLIC WORKS FACILITIES

Project: Citywide East Site Radio Communications Tower

Name of Bidder_____Business Phone _____

Business Address _____

Place of Business _____

Contractor's License No. _____

License Expiration Date_____

License Classification Type _____

DIR Registration No. _____

Type of business organization: _____

*If a Corporation, incorporated under the laws of the State of: _____

City of Roseville Business License No._____

The undersigned Bidder herewith submits this Proposal and binds itself on award by the City of Roseville under this bid to execute a Contract in accordance with its bid and the Contract Documents.

The Notice to Contractors, Instructions to Bidders, Form of Agreement, Specifications, General Conditions, Supplemental Conditions, Contract Drawings, and Addenda, if any, are made part of this bid and all provisions thereof are hereby accepted, and all representations and warranties are required thereby are hereby affirmed.

The work to be done is described in the Bidding Documents entitled _____

_____, City of Roseville, California.

This offer shall be irrevocable for a period of sixty (60) Days after the date on which bids are opened.

The undersigned Bidder understands that any clarification made to the above or any new and different conditions or information submitted on or with its Proposal, other than that requested, may render the bid non-responsive.

The undersigned, as Bidder, declares that the only persons or parties interested in this Proposal as principals are those named herein; that this Proposal is made without collusion with any other person, firm, or corporation; that the Bidder has carefully examined the location of the proposed Work, the attached Form of Agreement, and the plans, Specifications, and other Contract Documents; and agrees if this Proposal is accepted, that it will contract with the City of Roseville, in the form of a copy of the Agreement contained in the Project Manual, to provide all necessary machinery, tools, apparatus and other means of construction, and to do all the work and furnish all the materials specified in the Contract Documents, in the manner and time therein prescribed, and according to the requirements of the Director, as therein set forth, and that the Bidder will take in full payment therefore prices indicated in the Schedule of Bid Items, including all work modified by addendum numbers_____. (IF NONE, STATE NONE).

Bids are required for all Bid Items. The amount of the Bid for comparison purposes will be the total of all items awarded.

The Bidder shall set forth for each item of work, in clearly legible figures, an item ("unit") price and a total for the item in the respective spaces provided for this purpose in the Schedule of Bid Items.

The prices included within the Schedule of Bid Items include all costs for labor, materials, tools, equipment, services, Subcontractors, suppliers, taxes, insurance, shipment, delivery, overhead, profit, and for all other costs necessary to perform the Work in accordance

with the Contract Documents.

Accompanying this Proposal is_____.

(Notice: Insert the words "Cash $_____," "Cashier's Check," "Certified Check," or "Bidder's Bond," as the case may be, in an amount equal to at least ten percent (10%) of the total of the Bid.)

The names of all persons interested in the foregoing Proposal as Principals, are as follows: _____

_____

_____

_____

If SOLE OWNER, execute here:

I sign as sole owner of the business named above:

_____

If PARTNERSHIP, one or more partners sign here:

The undersigned certify that we are partners in the business named above and that we sign this bid with the full authority to do so:

_____

_____

If CORPORATION, execute here:

Corporate Name: _____

Incorporated under the laws of the State of _____

The undersigned certify that they sign this bid with the full and proper authorization so to do:

By_____	By_____
*Signature of Authorized Official**	*Signature of Authorized Official**
_____	_____
Title	*Title*
_____	_____
Typewritten or Printed Name	*Typewritten or Printed Name*

If JOINT VENTURE, execute here:

Joint Venture name composed of: _____

The undersigned certify that they sign this bid with the full and proper authorization so to do:

_____	_____
*Signature of Authorized Official**	*Signature of Authorized Official**
_____	_____
Title	*Title*
_____	_____
Typewritten or Printed Name	*Typewritten or Printed Name*

*If Bidder is a partnership or Joint Venture, give the full names of all partners and/or Joint Ventures in the space provided (use additional sheet if required). If Bidder is a corporation, two signatures are required as follows: (1) the Chairman, President, or Vice-President and (2) the Secretary, Assistant Secretary, Chief Financial Officer, Treasurer, or Assistant Treasurer. In the alternative, this Agreement may be executed by a single officer or a person other than an officer provided that evidence satisfactory to City is provided demonstrating that such individual is authorized to bind the corporation (example, a copy of a certified resolution from the corporation's board or a copy of the corporation's bylaws).

[LIST OF SUBCONTRACTORS FOLLOWS ON NEXT PAGE.]

LIST OF SUBCONTRACTORS

Contractor's Name: _____

The Bidder is required to furnish the following information in accordance with the provisions of Section 4100 and 4114, inclusive, of the Public Contract Code of the State of California. This list and information shall include all Subcontractors that perform work, provide labor or render services to the Bidder in connection with the Project in an amount in excess of one-half of one percent (0.5%) of the total amount of the Bidder Grand Total Price.

PORTION/ TYPE OF WORK	% OF CONTRACT	SUB-CONTRACTOR'S NAME	CONTRACTOR LICENSE NO.	DIR REG NO.	BUSINESS ADDRESS (CITY, STATE)

SECURITY FOR COMPENSATION CERTIFICATE

(Required by California Labor Code Section 1861)

TO: City Council
City of Roseville

I am aware of the provisions of Section 3700 of the Labor Code which require every employer to be insured against liability for workers' compensation or to undertake self-insurance in accordance with the provisions of that code, and I will comply with such provisions before commencing the performance of the work of this Contract.

_____

_____
(Signature of Bidder)

_____

_____
Business Address

_____
Telephone

BIDDER'S BOND

City Council of the City of Roseville

KNOW ALL MEN BY THESE PRESENTS:

That we _____

_____, as PRINCIPAL, and

_____

a,_____and duly authorized to transact business under the laws of the State of California, as SURETY, are held and firmly bound unto the City of Roseville in the penal sum of_____dollars ($_____), being at least TEN PERCENT (10%) OF THE TOTAL AMOUNT OF THE BID of the Principal above named, submitted by said Principal to the City of Roseville, acting by and through the Public Works Director, for the work described below, for the payment of which sum in lawful money of the United States, well and truly to be made, to the Director of the Department to which said Bid was submitted, we bind ourselves, our heirs, executors, administrators and successors, jointly and severally, firmly by these presents.

THE CONDITION OF THIS OBLIGATION IS SUCH,

That whereas the Principal has submitted the above-mentioned Bid to the City Council of the City of Roseville, as aforesaid, for certain construction specifically described as follows, for which Bids are to be opened at the Office of the City Clerk located at 311 Vernon Street, Roseville, California, on_____, 20 FOR

_____

(Copy here the exact title of work as it appears on the Proposal.)

NOW, THEREFORE, IF THE AFORESAID PRINCIPAL is awarded the Contract and, within the time and manner required under the Contract Documents, after the prescribed forms are presented for signature, enters into a written Contract, in the prescribed form, in accordance with the Bid, and files all insurance and two (2) Bonds with the Department, one (1) to guarantee Faithful Performance and the other to guarantee Payment for Labor and Materials, as required by law, then this obligation shall be null and void; otherwise, it shall be and remain in full force and effect.

IN WITNESS WHEREOF, we have hereunto set our hands and seals on this_____day of_____, 20___.

_____(Seal)

_____(Seal)

_____(Seal)
Principal

_____(Seal)

_____(Seal)

_____(Seal)
Surety

_____

_____
Business Address

NOTE: To be considered complete, both the Principal and the Surety must sign this Bidder's Bond. In addition, signatures of those executing for the Surety must be properly acknowledged.

Project _____

Contractor _____

SCHEDULE OF BID ITEMS

NONCOLLUSION DECLARATION TO BE EXECUTED BY
BIDDER AND SUBMITTED WITH BID

The undersigned declares:

I am the_____of _____, the party making the foregoing bid.

The bid is not made in the interest of, or on behalf of, any undisclosed person, partnership, company, association, organization, or corporation. The bid is genuine and not collusive or sham. The Bidder has not directly or indirectly induced or solicited any other Bidder to put in a false or sham bid. The Bidder has not directly or indirectly colluded, conspired, connived, or agreed with any Bidder or anyone else to put in a sham bid, or to refrain from bidding. The Bidder has not in any manner, directly or indirectly, sought by agreement, communication, or conference with anyone to fix the bid price of the Bidder or any other Bidder, or to fix any overhead, profit, or cost element of the bid price, or of that of any other Bidder. All statements contained in the bid are true. The Bidder has not, directly or indirectly, submitted his or her bid price or any breakdown thereof, or the contents thereof, or divulged information or data relative thereto, to any corporation, partnership, company, association, organization, bid depository, or to any member or agent thereof, to effectuate a collusive or sham bid, and has not paid, and will not pay, any person or entity for such purpose.

Any person executing this declaration on behalf of a Bidder that is a corporation, partnership, joint venture, limited liability company, limited liability partnership, or any other entity, hereby represents that he or she has full power to execute, and does execute, this declaration on behalf of the Bidder.

I declare under penalty of perjury under the laws of the State of California that the foregoing is true and correct and that this declaration is executed on _____ [date], at_____[city],_____[state].

_____
(Signature of Declarant)

DISQUALIFICATION QUESTIONNAIRE

The Bidder shall complete, under the penalty of perjury, the following questionnaire:

Has the Bidder, any officer of the Bidder, or any employee of the Bidder who has proprietary interest in the Bidder, ever been disqualified, removed, or otherwise prevented from bidding on, or completing a federal, state, or local government project because of a violation of law or a safety regulation?

Yes_____ No_____

If the answer is yes, explain the circumstances in the following space.

_____

_____

_____

_____

_____

_____

NAME OF BIDDER: _____

SIGNATURE OF BIDDER: _____

TITLE OF BIDDER: _____

DATE: _____

ACKNOWLEDGEMENT OF INSURANCE AND BOND REQUIREMENTS

Included in the Bid Price is full compensation for the requirements set forth in the INSURANCE BROKER INFORMATION PACKET of the Project Manual.

NAME OF BIDDER: _____

SIGNATURE OF BIDDER: _____

TITLE OF BIDDER: _____

DATE: _____

DISCLAIMER OF WARRANTIES AND ACCURACY OF DATA

Although soil and site investigation reports have been obtained from sources believed to be reliable, no warranty expressed or implied is made regarding accuracy, adequacy, completeness, legality, reliability or usefulness of any information contained therein. These reports are subject to change at any time, may be incomplete, and/or may contain errors. This information is provided for informational purposes only. The City of Roseville provides this information on an "as is" basis. Warranties of any kind, express or implied, or statutory, including but not limited to the implied warranties of merchantability, and fitness for a particular purpose ARE DISCLAIMED to any party viewing these documents or to any third party.

The City of Roseville does not accept and expressly disclaims liability to any party viewing such information, or to any third party whatsoever, for any loss, damage, or injury (including incidental or consequential damages) whether such loss, damage, or injury is the result of negligence, willful or intentional misconduct, or any other cause.

I have read and acknowledged the above disclaimer and agree to hold harmless the City of Roseville on any theory of liability for any loss, damage or injury whether in contract, strict liability or tort arising in any way out of the use or contents of the released information or documents described above or the performance of the work called for herein.

_____	_____
Print Name	Signature
_____	_____
Name of Business/Company/Corporation	Date
_____	_____
Address	Phone

END OF PROPOSAL

A G R E E M E N T

THIS AGREEMENT, is made and entered into this_____day of_____, 20_____, by and between the City of Roseville, a municipal corporation, ("CITY"), and _____, a_____, ("CONTRACTOR"); and

W I T N E S E T H:

WHEREAS, the City Council of the CITY, at a meeting held on the_____day of _____, 20_____, approved plans and specifications for the

_____

and directed the City Clerk to advertise for sealed proposals for doing said work and providing that bids be submitted on the_____day of_____, 20_____; and

WHEREAS, the City Clerk, thereafter duly and regularly caused a notice to be published in the manner and for the time prescribed by law; and

WHEREAS, CONTRACTOR, pursuant to the provisions of said notice duly filed a bid with the City Clerk, a true copy of which bid is now on file in the office of the City Clerk, and is hereby referred to and by this reference made a part hereof as fully as if set forth at length herein; and

WHEREAS, all bids received pursuant to said notice were opened and examined and publicly declared at the time specified in said advertisement for bids and at a meeting of the City Council held on the_____day of_____, 20_____, the Council found and

declared the bid of CONTRACTOR to be the lowest responsible bid and thereupon awarded a contract to CONTRACTOR to do the work referred to in the aforementioned specifications.

NOW, THEREFORE, the parties agree as follows:

1. THE WORK. CONTRACTOR agrees:

a. To do the work and furnish all the labor, materials, tools, supplies, equipment, superintendence, insurance, and bonds required for the _____

_____

in accordance with the Contract Documents (the Work).

b. To do and perform the Work contemplated hereby in a good and workmanlike manner under the direction of and to the satisfaction of the Director of Public Works of the City of Roseville.

2. PAYMENT. CITY shall pay CONTRACTOR _____

_____ dollars ($_____) for the Work to be done under this Agreement in accordance with the Contract Documents.

3. CONTRACT DOCUMENTS. The complete Agreement between the parties hereto consists of the following documents:

a. The advertisement for bids (including the notice to bidders, instructions to bidders and proposals);

b. The accepted bid;

c. Plans and specifications (including general conditions, supplemental conditions, special provisions and construction details);

d. Bonds and insurance required by the specifications; and

e. This contract.

All documents specified above are intended to operate so that any work called for in any one and not mentioned in the other, or vice versa, is to be executed the same as if mentioned in all said documents.

4. LIQUIDATED DAMAGES. In the event CONTRACTOR does not complete the Work within the time specified, CONTRACTOR agrees that CITY will suffer damages. Inasmuch as the actual damages which would result from such breach by CONTRACTOR under this Agreement are uncertain, and would be impractical or extremely difficult to fix, CONTRACTOR agrees that it shall pay, or CITY shall deduct from CONTRACTOR's fee, the amount of $_____per day as liquidated damages, in the event of such delay.

5. TIME OF COMPLETION. Time is of the essence of this Agreement. CONTRACTOR shall complete all Work under the Contract Documents within_____Days of the date of this Contract. CONTRACTOR shall begin work by the date specified in the "Notice to Proceed" letter and shall diligently prosecute all of the Work under this Contract in all parts and requirements as defined in the Contract Documents.

6. SERVICE OF NOTICE. Any notice required or permitted to be given under this Agreement shall be deemed given when (a) personally delivered to the recipient identified below; (b) mailed by registered or certified mail, return receipt requested, postage pre-paid, to the address specified below; or (c) sent by facsimile, with confirmation of receipt, to the facsimile number identified below.

CITY OF ROSEVILLE	CONTRACTOR
_____	_____
_____	_____
_____	_____
_____	_____

CITY may also act through either its architect or construction manager if CITY expressly gives notice to CONTRACTOR, in writing, that CITY's designee has authority to act for CITY in a specific capacity.

7. DISPUTES. Disputes arising from this Agreement will be determined in accordance with the Contract Documents and Public Contract Code Sections 10240-10240.13.

8. GOVERNING LAW. This Agreement shall be governed by and construed in accordance with the laws of the State of California.

9. INDEPENDENT CONTRACTOR. CONTRACTOR shall act as an independent contractor, and covenants and agrees that it will conduct itself consistent with such status, that it will neither hold itself out as, nor claim to be, an officer or employee of CITY by reason of this Agreement.

10. SUCCESSORS IN INTEREST. This Agreement shall be binding upon the heirs, successors, executors, administrators and assigns of the respective parties hereto.

11. MODIFICATION. This Agreement and each provision contained herein may be waived, amended, supplemented or eliminated only by mutual written agreement of the parties.

12. SEVERABILITY. If any of the provisions contained in this Agreement are for any reason held invalid or unenforceable, such holding shall not affect the remaining provisions or the validity and enforceability of the Agreement as a whole.

13. INTEGRATED AGREEMENT. This is an integrated agreement and contains all of the terms, considerations, understanding and promises of the parties. It shall be read as a whole.

14. CONTRACTORS LICENSE LAW. CONTRACTORS ARE REQUIRED BY LAW TO BE LICENSED AND REGULATED BY THE CONTRACTORS' STATE LICENSE

BOARD WHICH HAS JURISDICTION TO INVESTIGATE COMPLAINTS AGAINST CONTRACTORS IF A COMPLAINT REGARDING A PATENT ACT OR OMISSION IS FILED WITHIN FOUR (4) YEARS OF THE DATE OF THE ALLEGED VIOLATION. A COMPLAINT REGARDING A LATENT ACT OR OMISISON PERTAINING TO STRUCUTRAL DEFECTS MUST BE FILED WITHIN TEN (10) YEARS OF THE DATE OF THE ALLEGED VIOLATION. ANY QUESTIONS CONCERNING A CONTRACTOR MAY BE REFERRED TO THE REGISTRAR, CONTRACTORS' STATE LICENSE BOARD, P.O. BOX 26000, SACRAMENTO, CALIFORNIA 95826.

IN WITNESS WHEREOF, the City of Roseville, a municipal corporation, has authorized the execution of this Agreement in duplicate by its City Manager and attestation by its City Clerk under authority of Resolution No._, adopted by the Council of the City of Roseville on the ____day of_____, 20_____, and CONTRACTOR has caused this Agreement to be duly executed.

CITY OF ROSEVILLE, a municipal corporation

BY:_____
DOMINICK CASEY
City Manager

ATTEST:

BY:_____
CARMEN AVALOS
City Clerk

_____, a _____

BY: _____
its: _____

and

BY: _____
its: _____

APPROVED AS TO FORM:

BY:_____
MICHELLE SHEIDENBERGER
City Attorney

APPROVED AS TO SUBSTANCE:

BY: _____

Print Name:_____

Title:_____

INSURANCE BROKER INFORMATION PACKET

Project:_____

NOTICE TO CONTRACTOR:

For your convenience, this package contains the Requirements for Insurance and Bonds for this project, including the necessary City forms. You are required to return these forms in addition to the executed Contract within fifteen (15) calendar days after the award of the Bid, unless otherwise directed by City in writing. (See the Instructions to Bidders.)

Please insert the dollar amount of your accepted Bid into the blank on page INS-1 and present this entire package to your insurance broker if you are awarded the Bid.

TABLE OF CONTENTS

	Page
Notice to Insurance Broker	INS 1
Insurance Requirements	INS 2
Public Works Faithful Performance Bond	INS 10
Public Works Payment Bond	INS 13

NOTICE TO INSURANCE BROKER

Your client has been awarded a bid by the City Council of the City of Roseville to perform a public works project known as_____. The Contract Conditions for that project require your client ("the Contractor") to return certain evidence of insurance and bonds to the City Attorney of the City within fifteen (15) days after the Bid award, unless otherwise directed by the City in writing, or else the Bid award may be terminated and awarded to another company.

This package contains the information you will need as an insurance broker to provide the appropriate insurance and bonds to the City. The insurance coverages the Contractor needs are specified in the section entitled "Insurance Requirements." Please note that, in addition to the insurance certificate itself, copies of several endorsements must be actually furnished.

Please refer to the Supplemental Conditions for modifications of the General Conditions, if any, and the requirements of this insurance packet.

Please use the standard City of Roseville Bond Forms provided in this package.

The Bonds required must each be in the penal amount of: $_____.

Bonds must be sent to the following staff person:

_____

_____

_____

Insurance documents must be provided using one of the following methods:

a. By email to roseville@ebix.com and riskmanagement@roseville.ca.us

b. By fax to (770) 335-5727 and (916) 774-5461

After using one of these methods, please **DO NOT** send the insurance certificate(s) by mail.

When forwarding the documents, please refer to the project name so that the documents can be matched with the Contract for which they are submitted.

Thank you.

INSURANCE REQUIREMENTS

The following sections are quoted from the General Conditions:

5-1.23 **INSURANCE COVERAGE.**

A. Evidence of Maintenance Required. The Contractor shall, at its expense, procure and at all times maintain in full force and effect at a minimum the insurance required by this section on all of its operations; and the Contractor shall not allow any Subcontractor to commence work until similar insurance required of the Subcontractor has been obtained and filed. An original Certificate of Insurance, and copies of all required endorsements, all in a form approved by the Risk Manager, evidencing all required coverage or policies shall be filed after the award of the bid and prior to approval of the Contract by the City Council. Contractor shall provide ten (10) days prior written notice to the City of any reduction of coverage limits or cancellation of the coverage or policies shall be given to the City of Roseville as Certificate holder.

B. Qualifying Insurers. With the exception of the State Compensation Insurance Fund, all required insurance policies shall be issued by companies acceptable to the City and licensed to do business in the State of California and who hold a current policy holders alphabetic and financial size category rating of not less than AVII according to the most recent issue of Best's Insurance Reports.

C. Insurance Required.

1. **Commercial General Liability (CGL):** Insurance Services Office Form CG 00 01 covering CGL on an "occurrence" basis, including products and completed operations with limits of no less than Two Million Dollars ($2,000,000) per occurrence for bodily injury, personal injury and property damage for projects under One Million Dollars ($1,000,000) and

limits of no less than Five Million Dollars ($5,000,000) per occurrence for bodily injury, personal injury and property damage for projects over One Million Dollars ($1,000,000). If a general aggregate limit applies, either the aggregate limit shall apply separately to this project or the general aggregate limit shall be twice the required occurrence limit.

The Commercial General Liability insurance shall include the following, copies of which shall be provided:

a. Inclusion of the City of Roseville, and its officers, agents, employees, and volunteers, as additional insureds (except for workers' compensation) as respects services or operations under the Contract. The additional insured endorsement for the general liability policy shall be at least as broad as the ISO CG 2010 10 01 combined with ISO CGL Endorsement CG 2037 10 01. Any other endorsement must be approved in writing by the City. Endorsements must include coverage for on-going and completed operations, which coverage shall be maintained for four (4) years following completion of the Project. Endorsements shall cover the City of Roseville, its officers, agents, employees, and volunteers.

b. The insurance shall provide coverage for claims by one insured against another insured and the policies shall not contain any cross-suits exclusions, cross-liability exclusions, or insured versus insured exclusions. The policies shall not contain any classification exclusions purporting to deny coverage for any work to be performed by Contractor or any of its Subcontractors.

c. Stipulation that the insurance is primary and noncontributory, as evidenced by a separate endorsement (CG 20 01 04 13 or an equivalent) or section of the policy, and that neither the City nor its insurers will be called upon to contribute to a loss.

d. Such insurance shall specifically cover the contractual liability of

the Contractor.

e. Any available insurance proceeds in excess of the specified minimum insurance coverage requirements and limits shall be available to the additional insureds. Furthermore, the requirements for coverage and limits shall be: (1) the minimum coverage and limits specified in this Agreement; or (2) the full coverage and maximum limits of any insurance proceeds available to the named insureds, whichever is greater.

f. Waiver of subrogation endorsement.

g. The Contractor shall furnish a certificate for the period covered.

2. **Automobile Liability:** Insurance Services Office Form Number CA 0001 covering Code 1 (any auto), or if Contractor has no owned autos, Code 8 (hired) and Code 9 (non-owned), with limits of no less than One Million Dollars ($1,000,000) per accident for bodily injury and property damage.

3. **Workers' Compensation:** In accordance with the provisions of the California Labor Code, Contractor is required to be insured against liability for Workers' Compensation or to undertake self-insurance. Statutory Workers' Compensation and Employers' Liability of at least One Million Dollars ($1,000,000) shall cover all Contractors staff while performing any work incidental to the performance or this Agreement.

4. **Professional Liability:** Professional Liability (Errors and Omission) Insurance appropriate to Contractor's profession, with a limit of liability not less than One Million Dollars ($1,000,000) per occurrence or claim and Two Million Dollars ($2,000,000) aggregate to cover all design and engineering services rendered by Contractor pursuant to the Agreement. Coverage must commence from the first day that Contractor or any of its Subcontractors provided any design or engineering services in connection with the Project.

5. **Builder's Risk/Course of Construction Insurance Is____OR Is Not ____ Required by Risk Management:** The Contractor shall be responsible for all loss, damage or destruction whatsoever to the work called for by this Contract until the approval of a Notice of Completion or acceptance of the Work if no Notice of Completion is to be recorded.

The Contractor shall secure "All Risk" type of builder's Risk Insurance of the type covering one hundred percent (100%) of the value of the work performed under this Contract (the value is presumed to be the Contract amount unless otherwise stated in Supplemental Conditions) and all materials, equipment, or other items to be incorporated therein while the same are located at the construction site, a bonded warehouse, or its place of manufacture. At any time, the policy shall cover the value of the work completed. The policy shall cover hazards including the losses due to fire, explosion, hail, rain, lightning, flood (separate insurance as needed), vandalism, malicious mischief, wind, collapse, aircraft, and smoke.

The policies providing such insurance shall name the City as a loss payee as its respective interests may appear, and certified copies of such policies shall be filed with the City. The maximum deductible allowable under the Builder's All Risk policy shall be five percent (5%) of the Contract amount.

Builder's Risk Insurance is not required for coverage of losses in excess of five percent (5%) of the Contract amount for damages resulting from earthquake in excess of a magnitude of 3.5 on the Richter scale, or tidal waves. Coverage in the amount of five percent (5%) of the Contract amount for such losses is required.

6. **Pollution Coverage:** Contractor shall procure pollution liability coverage or other insurance covering claims for bodily injury or property damage arising out of the abatement, removal, storage, transportation, or other exposure to hazardous materials or

pollutants, in limits not less than Two Million Dollars ($2,000,000). Contractor shall add the City and all parties required to be indemnified by Contractor as additional insured on all pollution liability policies.

7. **Higher Coverage Limits:** If Contractor maintains higher coverage limits than the amounts shown above, then the City requires and shall be entitled to coverage for the higher coverage limits maintained by Contractor. Any available insurance proceeds in excess of the specified minimum limits of insurance and coverage shall be available to the City.

8. **Claims Made Coverage:** Liability insurance coverage may not be written on a "claims made" or modified occurrence basis. The Certificate of Insurance must clearly provide that the coverage is on an "occurrence" basis.

5-1.24 **OTHER INSURANCE PROVISIONS.**

A. The requirements of the Standard Specifications as to types and limits of insurance coverage to be maintained by the Contractor, and any approval of insurance by the City, are not intended to, and shall not in any manner limit or qualify the liabilities and obligations otherwise assumed by the Contractor pursuant to the Contract, including, but not limited to, the provisions concerning indemnification, nor preclude the City from taking any other action available to it under any other provision of the Contract or law.

B. The City acknowledges that some insurance requirements contained in these Standard Specifications may be fulfilled by self-insurance on the part of the Contractor. However, this shall not in any way limit liabilities assumed by Contractor under the Contract. Any self-insurance must be approved in writing by the City, in its sole discretion and shall not reduce the limits of liability. Any deductibles or self-insured retentions ("SIR") must be declared on the certificate of insurance and approved by City in writing. Policies containing any

SIR provision shall provide or be endorsed to provide that the SIR may be satisfied by either the named insured or City. City reserves the right to obtain a full certified copy of any insurance policy and endorsements. The failure to exercise this right shall not constitute a waiver of such right.

C. The Contractor agrees to include in its contracts with all subcontractors the same requirements and provisions of this Contract, including the indemnity and insurance requirements, to the extent they apply to the scope of the subcontractor's work. Furthermore, the Contractor shall require its subcontractors to agree to be bound to the Contractor and the City in the same manner and to the same extent as the Contractor is bound to the City under this Contract. Additionally, the Contractor shall obligate its subcontractors to comply with these same provisions with respect to any tertiary subcontractor, regardless of tier. A copy of the City's indemnity and insurance provisions will be furnished to the subcontractor or tertiary subcontractor upon request. Alternatively, the Contractor may insure subcontractor(s) under its own policy.

D. The City, its officers, agents, employees, and volunteers are to be covered as insureds with respect to liability arising out of automobiles owned, leased, hired or borrowed by or on behalf of the Contractor; and with respect to liability arising out of work or operations performed by or on behalf of the Contractor including materials, parts or equipment furnished in connection with such work or operations. Coverage shall not extend to any indemnity coverage for the active negligence of the additional insured in any case where an agreement to indemnify the additional insured would be invalid under California Insurance Code Section 11580.04.

E. The limits of insurance required in this Contract may be satisfied by a combination of primary and excess insurance. Any excess insurance shall contain or be

endorsed to contain a provision that such coverage shall also apply on a primary and noncontributory basis for the benefit of the City (if agreed to in a written contract) before the City's own insurance shall be called upon to protect it as a named insured.

F. The insurance procured by Contractor shall be subject to the approval of the City, but any acceptance of insurance certificates by the City shall in no way limit or relieve Contractor of its duties and responsibilities under the Agreement.

G. Contractor shall be responsible for all premiums, deductibles, and self-insured retention applicable to the insurance it is required to procure under the Contract. All deductibles or self-insured retentions over five hundred thousand dollars ($500,000) must be approved by the City, in writing. Contractor shall be responsible for all deductibles, self-insured retention payments, and/or increased premiums incurred if the City's policies of insurance are forced to cover damages or respond to claims for which Contractor or its Subcontractors were obligated to provide insurance under the Contract.

H. Failure of the City to enforce in a timely manner any of the requirements of these insurance provisions shall not act as a waiver to enforcement of any of these provisions at a later date.

I. Contractor's indemnity obligations shall not be limited by these insurance provisions and shall survive the expiration of the Contract and the insurance provisions of the Contract shall likewise not be limited by the indemnity provisions of the Contract.

J. **THE CITY RESERVES THE RIGHT TO WITHHOLD ANY PROGRESS PAYMENTS TO THE CONTRACTOR IN THE EVENT OF NONCOMPLIANCE WITH ANY INSURANCE REQUIREMENTS.**

Bond No. _____
Premium $_____

PUBLIC WORKS
FAITHFUL PERFORMANCE BOND

(Project:_____)

WHEREAS, the City of Roseville ("CITY") has awarded a bid and contract to _____ as contractor ("PRINCIPAL") for the public work described as _____ _____ (the "WORK"). The contract ("AGREEMENT"), for the public work described above, and all of its terms and conditions are incorporated by reference and made a part hereof; and

WHEREAS, the PRINCIPAL is required to furnish a bond in connection with the AGREEMENT guaranteeing its faithful performance; and

NOW, THEREFORE, we the undersigned PRINCIPAL and _____ _____, a_____, admitted and duly authorized to transact business under the laws of the State of California, as SURETY ("SURETY"), are held and firmly bound unto the CITY or its successors and assigns in the sum of _____ dollars ($_____) (which amount is not less than 100% of the AGREEMENT price) to be paid to the CITY or its successors and assigns; and for which payment, well and truly to be made, we bind ourselves, our heirs, executors and administrators, successors or assigns jointly and severally, firmly by these presents.

The condition of this obligation is such that if the PRINCIPAL, or its heirs, executors, administrators, successors or assigns, shall abide by, and in all respects promptly and faithfully perform the covenants, conditions and provisions in said AGREEMENT and any alteration thereof made as therein provided, notice of which alterations to Surety being hereby waived, on its part to be kept and performed at the time and in the manner therein specified, and in all respects according to their true intent and meaning, and shall indemnify and save harmless CITY, its officers, agents, employees, volunteers as therein stipulated, then this obligation shall be null and void; otherwise, this obligation shall be and remain in full force and effect.

As condition precedent to the satisfactory completion of the contract, the obligation of the PRINCIPAL and SURETY under this Bond shall remain in effect for a period of one (1) year after the completion and acceptance of the WORK. During that time, if the PRINCIPAL, its heirs, executors, administrators, successors or assigns fails to make full, complete and satisfactory repair and replacement or totally protect the CITY from any loss or damage made evident during that year which results from or is caused by either defective materials or faulty workmanship in the prosecution of the WORK, then the obligation shall remain in full force and effect. However, anything in

this paragraph to the contrary notwithstanding, the obligation of the SURETY shall continue so long as any obligation of the PRINCIPAL remains.

No prepayment or delay in payments, and no change, extension, addition or alteration of any provision of the AGREEMENT or in the specifications agreed to between the PRINCIPAL and the CITY, or any forbearance on the part of the CITY shall operate to relieve the SURETY. The SURETY hereby waives the provisions of Section 2819 of the California Civil Code. The SURETY waives all rights of subrogation against the CITY or any person employed by the CITY. If the contract price increases by the issuance of change orders, the amount specified in this bond shall increase by the same amount.

Whenever PRINCIPAL shall be and declared by CITY to be in default under the AGREEMENT, SURETY shall promptly remedy the default, or shall promptly do one of the follow at CITY's election:

1. Undertake through its agents or independent contractors, reasonably acceptable to CITY, to complete the AGREEMENT in accordance with its terms and conditions and to pay and perform all obligations of PRINCIPAL under the AGREEMENT, including without limitation, all obligations with respect to warranties, guarantees, and the payment of liquidated damages.

2. Reimburse CITY for all costs CITY incurs in completing the AGREEMENT, and in correcting, repairing or replacing defects in materials or workmanship and/or materials and workmanship which do not conform to the specifications in the AGREEMENT.

SURETY's obligations hereunder are independent of the obligations of any other surety for the performance of the AGREEMENT, and suit may be brought against SURETY and such other sureties, jointly and severally, or against any one or more of them, or against less than all of them without impairing CITY's rights against the others.

No right of action shall accrue on this bond to or for the use of any person or corporation other than CITY or its successors or assigns.

As part of the obligation secured hereby and in addition to the face amount specified therefore, there shall be included costs and reasonable expenses and fees, including reasonable attorneys' fees, incurred by CITY in successfully enforcing such obligation, all to be taxed as costs and included in any judgment rendered.

[SIGNATURES NEXT PAGE]

IN WITNESS WHEREOF, this instrument has been duly executed by the PRINCIPAL and SURETY above-named, on the_____day of_____, 20___.

PRINCIPAL:

BY:_____

PRINT NAME:_____

PRINT TITLE:_____

AND

BY: _____

PRINT NAME:_____

PRINT TITLE:_____

SURETY:

BY:_____

PRINT NAME:_____

PRINT TITLE:_____

MAILING ADDRESS:

_____

_____

_____

(Notarization by Surety and copy of Power of Attorney required.)

APPROVED AS TO FORM:

BY: _____
City Attorney

Bond No. _____
Premium $_____

PUBLIC WORKS
LABOR AND MATERIALS PAYMENT BOND
(Project:_____)

WHEREAS, the City of Roseville ("CITY"), has awarded a bid and contract to _____ as contractor ("PRINCIPAL"), for the public work described as _____ _____ (the "WORK"). The contract ("AGREEMENT"), for the public work described above, and all of its terms and conditions are incorporated by reference and made a part hereof; and

WHEREAS, the PRINCIPAL is required to furnish a bond in connection with the AGREEMENT guaranteeing payment of persons who provide labor and material; and

NOW, THEREFORE, we the undersigned PRINCIPAL and _____ _____, a_____, admitted and duly authorized to transact business under the laws of the State of California, as SURETY ("SURETY"), are held and firmly bound unto the CITY or its successors and assigns in the sum of _____ dollars ($_____) (which amount is not less than 100% of the AGREEMENT price) to be paid to the CITY or its successors and assigns; and for which payment, well and truly to be made, we bind ourselves, our heirs, executors and administrators, successors or assigns jointly and severally, firmly by these presents.

The condition of the obligation is such that if the PRINCIPAL, its subcontractors, heirs, executors, administrators, successors or assigns fails to pay any of the persons named in Section 8004 or 9100 of the Civil Code of the State of California, or the amounts due under the Unemployment Insurance Code of the State of California, or any amounts required to be deducted, withheld and paid over to the Employment Development Department from the wages of employees of the PRINCIPAL and its subcontractors pursuant to Section 13020 of the Unemployment Insurance Code, with respect to work or labor performed by any such claimant, that the SURETY will pay for the same, in an amount not exceeding the sum specified in this bond, and also, in case suit is brought upon the bond, shall pay reasonable attorneys' fees, to be fixed by the Court.

This bond shall inure to the benefit of any and all persons, companies, and corporations entitled to file a Stop Payment Notice pursuant to the provisions of Section 9350 et seq. of the Civil Code of the State of California, so as to give a right of action to them or their assigns in any suit brought upon this bond.

No prepayment or delay in payments, and no change, extension, addition or alteration of any provision of the AGREEMENT or in the specifications agreed to between the PRINCIPAL and the CITY, or any forbearance on the part of the CITY shall operate to relieve the SURETY. The SURETY hereby waives the provisions of Section 2819 of the California Civil Code. The SURETY waives all rights of subrogation against the CITY or any person employed by the CITY. If the contract price increases by the issuance of change orders, the amount specified in this bond shall increase by the same amount.

As part of the obligation secured hereby and in addition to the face amount specified therefore, there shall be included costs and reasonable expenses and fees, including reasonable attorneys' fees, incurred by CITY in successfully enforcing such obligation, all to be taxed as costs and included in any judgment rendered.

IN WITNESS WHEREOF, this instrument has been duly executed by the PRINCIPAL and SURETY above-named, on the_____day of_____, 20_.

PRINCIPAL:

BY:_____

PRINT NAME:_____

PRINT TITLE:_____

AND

BY: _____

PRINT NAME:_____

PRINT TITLE:_____

SURETY:

BY:_____

PRINT NAME:_____

PRINT TITLE:_____

MAILING ADDRESS:

_____

_____

_____

(Notarization by Surety and copy of Power of Attorney required.)

APPROVED AS TO FORM:

BY: _____
City Attorney

CITY OF ROSEVILLE

GENERAL CONDITIONS

FOR

BUILDINGS AND GROUNDS

CITY OF ROSEVILLE
GENERAL CONDITIONS
FOR
BUILDINGS AND GROUNDS

SECTION 1: DEFINITIONS AND TERMS GC-1:1

1-1.01 GENERAL GC-1:1
1-1.02 ACCEPTANCE GC-1:1
1-1.03 ADDENDUM GC-1:1
1-1.04 AS-BUILT DOCUMENTS, AS-BUILT DRAWINGS AND RECORD DOCUMENTS GC-1:1
1-1.05 ASSESSMENT GC-1:1
1-1.06 BENEFICIAL OCCUPANCY GC-1:2
1-1.07 BID GUARANTY GC-1:2
1-1.08 BIDDER GC-1:2
1-1.09 BIDDING DOCUMENTS GC-1:2
1-1.10 CHANGE ORDER GC-1:2
1-1.11 CITY GC-1:2
1-1.12 CITY ATTORNEY GC-1:2
1-1.13 CITY CLERK GC-1:2
1-1.14 CLAIM GC-1:2
1-1.15 CONSTRUCTION SCHEDULE GC-1:3
1-1.16 CONTRACT OR AGREEMENT GC-1:3
1-1.17 CONTRACT CONDITIONS GC-1:3
1-1.18 CONTRACT DOCUMENTS GC-1:3
1-1.19 CONTRACT DRAWINGS GC-1:3
1-1.20 CONTRACT PRICE GC-1:4
1-1.21 CONTRACT TIME GC-1:4
1-1.22 CONTRACTOR GC-1:4
1-1.23 DAY OR DAYS GC-1:4
1-1.24 DEPARTMENT GC-1:4
1-1.25 DIRECT COSTS GC-1:4
1-1-26 DIRECTOR. GC-1:6
1-1.27 EMERGENCY. GC-1:6
1-1.28 ENGINEER OR ARCHITECT GC-1:7
1-1.29 FINAL COMPLETION GC-1:7
1-1.30 FORCE ACCOUNT GC-1:7
1-1.31 GENERAL NOTES GC-1:7
1-1.32 INSTALLATION, INSTALL GC-1:7
1-1.33 LABORATORY GC-1:7
1-1.34 LEGAL HOLIDAYS GC-1:7
1-1.35 LIQUIDATED DAMAGES GC-1:7
1-1.36 NOTICE OF COMPLETION GC-1:8
1-1.37 NOTICE TO PROCEED GC-1:8
1-1.38 NOTICE OF TERMINATION GC-1:8

1-1.39 OVERHEAD....GC-1:8
1-1.40 PREMISES....GC-1:9
1-1.41 PROFESSIONAL ENGINEER....GC-1:9
1-1.42 PROJECT MANUAL....GC-1:9
1-1.43 PROPOSAL FORMS....GC-1:9
1-1.44 REQUEST FOR INFORMATION (RFI)....GC-1:9
1-1.45 SAFETY....GC-1:9
1-1.46 SCHEDULE OF VALUES....GC-1:9
1-1.47 SHOP DRAWINGS....GC-1:10
1-1.48 SPECIFICATIONS....GC-1:10
1-1.49 SUBCONTRACTOR....GC-1:10
1-1.50 SUBMITTALS....GC-1:10
1-1.51 SUPPLEMENTAL CONDITIONS....GC-1:10
1-1.52 SUPPLIER....GC-1:10
1-1.53 WORK....GC-1:11
1-1.54 WORK SITE....GC-1:11
1-1.55 WORKING DRAWINGS....GC-1:11

SECTION 2: CONTROL AND SCOPE OF THE WORK....GC-2:1

2-1.01 AUTHORITY OF DIRECTOR....GC-2:1
2-1.02 INTENT OF CONTRACT DOCUMENTS....GC-2:1
2-1.03 EXAMINATION AND VERIFICATION OF CONTRACT DOCUMENTS....GC-2:2
2-1.04 CONTRACT DRAWINGS....GC-2:3
2-1.05 COORDINATION AND INTERPRETATION OF CONTRACT DOCUMENTS....GC-2:3
2-1.06 INDEPENDENT CONTRACTOR STATUS....GC-2:5
2-1.07 ORDER OF WORK....GC-2:5
2-1.08 SUBMITTALS....GC-2:5
2-1.08A SHOP DRAWINGS....GC-2:6
2-1.08B DESCRIPTIVE DATA....GC-2:7
2-1.08C SAMPLES....GC-2:7
2-1.08D MANUALS, INSTRUCTIONS AND AFFIDAVIT....GC-2:7
2-1.08E ALTERNATIVES....GC-2:10
2-1.09 DISPOSAL OF MATERIAL OUTSIDE THE WORK SITE....GC-2:12
2-1.10 ACCESS TO THE WORK....GC-2:12
2-1.11 TEMPORARY UTILITIES....GC-2:12
2-1.12 UTILITY FACILITIES....GC-2:13
2-1.13 PRESERVATION AND CLEANING....GC-2:14
2-1.14 LIMITATIONS ON WORK SITE AND PREMISES....GC-2:14
2-1.15 DUST CONTROL....GC-2:15
2-1.16 SANITATION....GC-2:15
2-1.17 NIGHT WORK AND NORMAL WORKING HOURS....GC-2:15
2-1.18 LINES AND GRADES....GC-2:16
2-1.19 ARCHEOLOGICAL DISCOVERIES....GC-2:17
2-1.20 PRESERVATION OF MONUMENTS....GC-2:17
2-1.21 CONFORMITY WITH CONTRACT DOCUMENTS....GC-2:18

2-1.22 FINAL CLEANUP GC-2:18
2-1.23 AS-BUILT DOCUMENTS AND DRAWINGS GC-2:18
2-1.24 SUPERINTENDENCE GC-2:19
2-1.25 CHARACTER OF WORKER GC-2:20
2-1.26 INSPECTION GC-2:20
2-1.27 REMOVAL OF REJECTED AND UNAUTHORIZED WORK GC-2:21

SECTION 3: CHANGES IN THE WORK GC-3:1

3-1.01 CHANGES GC-3:1
3-1.02 PROPOSED CHANGE ORDERS GC-3:2
3-1.03 EMERGENCY AND INDETERMINATE TYPE CHANGE ORDERS GC-3:3
3-1.04 EXECUTED CHANGE ORDER GC-3:3
3-1.05 CONTRACT PRICE ADJUSTMENT GC-3:3
3-1.06 FORCE ACCOUNT PAYMENT GC-3:5
3-1.06A LABOR GC-3:6
3-1.06B MATERIALS GC-3:6
3-1.06C EQUIPMENT GC-3:7
3-1.06D MARKUPS GC-3:8
3-1.06E RECORDS GC-3:9
3-1.07 COST REDUCTION PROPOSALS GC-3:11

SECTION 4: CONTROL OF MATERIALS GC-4:1

4-1.01 MATERIALS GC-4:1
4-1.02 PRODUCT AND REFERENCE STANDARDS GC-4:2
4-1.03 SAMPLING AND TESTING OF MATERIALS GC-4:2
4-1.04 CERTIFICATES OF COMPLIANCE GC-4:7

SECTION 5: LEGAL RELATIONS AND RESPONSIBILITY GC-5:1

5-1.01 LAWS TO BE OBSERVED GC-5:1
5-1.02 HOURS OF LABOR GC-5:1
5-1.03 NONDISCRIMINATION GC-5:2
5-1.04 PREVAILING WAGE GC-5:3
5-1.05 REGISTRATION REQUIRED AS QUALIFICATION TO BID GC-5:6
5-1.06 PAYROLL RECORDS GC-5:7
5-1.07 SAFETY REQUIREMENTS GC-5:10
5-1.08 SUBSURFACE EXCAVATIONS, NOTIFICATION GC-5:15
5-1.09 PUBLIC SAFETY GC-5:15
5-1.10 EMERGENCIES GC-5:17
5-1.11 APPRENTICES GC-5:18
5-1.12 FAIR LABOR STANDARDS ACT GC-5:18
5-1.13 WORKERS' COMPENSATION GC-5:19
5-1.14 AIR POLLUTION CONTROL AND ASBESTOS GC-5:19
5-1.15 USE OF PESTICIDES GC-5:20
5-1.16 SOUND AND LIGHT CONTROL REQUIREMENTS GC-5:20
5-1.17 WEIGHT LIMITATIONS GC-5:21
5-1.18 ENVIRONMENTAL CLEARANCES; MITIGATION MONITORING PROGRAMS; AND REGULATORY AGENCY PERMIT

REQUIREMENTS GC-5:21
5-1.19 PERMITS AND LICENSES GC-5:21
5-1.20 WATER POLLUTION GC-5:22
5-1.21 PROTECTION AND USE OF PROPERTY GC-5:23
5-1.22 RESPONSIBILITY FOR DAMAGE AND INDEMNIFICATION GC-5:24
5-1.23 INSURANCE COVERAGE GC-5:26
5-1.24 OTHER INSURANCE PROVISIONS GC-5:31
5-1.25 THIRD PARTY BENEFICIARY GC-5:33
5-1.26 COORDINATION AND ACCESS GC-5:33
5-1.27 OCCUPANCY BY THE DEPARTMENT PRIOR TO ACCEPTANCE GC-5:34
5-1.28 RIGHT TO OPERATE UNSATISFACTORY FACILITIES AND EQUIPMENT GC-5:35
5-1.29 CONTRACTOR'S RESPONSIBILITY FOR THE WORK GC-5:36
5-1.30 RESPONSIBILITY FOR UTILITIES GC-5:37
5-1.31 PROPERTY RIGHTS IN MATERIALS GC-5:39
5-1.32 COURT ORDERED DELAY GC-5:39
5-1.33 NO PERSONAL LIABILITY GC-5:39
5-1.34 RIGHTS IN LAND AND IMPROVEMENTS GC-5:40
5-1.35 ANTITRUST CLAIMS GC-5:40
5-1.36 RIGHTS TO DRAWINGS, TECHNICAL DATA PATENTS GC-5:40
5-1.37 PAYMENT OF TAXES GC-5:41
5-1.38 GRATUITIES AND CONFLICT OF INTEREST GC-5:42
5-1.39 COOPERATION GC-5:43
5-1.40 DIGGING TRENCHES OR OTHER EXCAVATIONS GC-5:43
5-1.41 CONTRACTOR REGISTRATION GC-5:44
5-1.42 CITY OF ROSEVILLE ENCROACHMENT PERMITS AND RIGHTS-OF-WAY GC-5:45

SECTION 6: PROSECUTION AND PROGRESS GC-6:1

6-1.01 SUBLETTING AND SUBCONTRACTING GC-6:1
6-1.02 ASSIGNMENT GC-6:2
6-1.03 BEGINNING OF WORK GC-6:2
6-1.04 PROGRESS SCHEDULE. GC-6:3
6-1.05 SCHEDULE OF VALUES GC-6:9
6-1.06 CITY'S RIGHT TO STOP WORK GC-6:9
6-1.07 TIME OF COMPLETION GC-6:11
6-1.08 LIQUIDATED DAMAGES GC-6:12
6-1.09 DELAYS AND EXTENSIONS TO THE WORK GC-6:13
6-1.10 TERMINATION GC-6:18
6-1.10A TERMINATION OF AGREEMENT – CONVENIENCE OF CITY. GC-6:18
6-1.10B TERMINATION OF AGREEMENT - FOR CAUSE GC-6:21

SECTION 7: ACCEPTANCE AND PAYMENT GC-7:1

7-1.01 ACCEPTANCE GC-7:1
7-1.02 SCOPE OF PAYMENT GC-7:2
7-1.03 NOTICE OF POTENTIAL CLAIM GC-7:2
7-1.04 CLAIMS GC-7:5

7-1.05 DISPUTE RESOLUTION PROCEDURE GC-7:6
7-1.06 STOP PAYMENT NOTICES GC-7:7
7-1.07 PROGRESS PAYMENTS GC-7:7
7-1.08 PAYMENT FOR MATERIALS AND EQUIPMENT ON HAND GC-7:9
7-1.09 RETENTION ON PROGRESS PAYMENTS GC-7:11
7-1.10 FINAL PAYMENT GC-7:12
7-1.11 CLERICAL ERRORS GC-7:14
7-1.12 WARRANTY GC-7:14
7-1.13 WARRANTY OF TITLE GC-7:16

SECTION 1

DEFINITIONS AND TERMS

1-1.01 **GENERAL.** When the following abbreviations and terms or pronouns in place of them appear in the Contract Documents, the intent and meaning shall be interpreted as provided in this Section 1.

1-1.02 **ACCEPTANCE.** Formal Acceptance by resolution by the Roseville City Council of the Contract when completed in all respects in accordance with the Contract Documents and any modifications previously approved.

1-1.03 **ADDENDUM.** Written interpretation or revision to any of the Contract Documents issued by the City before the bid opening.

1-1.04 **AS-BUILT DOCUMENTS, AS-BUILT DRAWINGS AND RECORD DOCUMENTS.** As-Built Documents, As-Built Drawings and Record Documents are all contract documents modified to reflect changes during the construction phase. Specifically, As-Built Documents/Drawings are a revised set of drawings submitted by the Contractor upon Final Completion of a project. They reflect changes made in the Specifications and Working Drawings during the construction process, and show the exact dimensions, geometry, and location of all elements of the work completed under the Contract. Record Documents, on the other hand, are compiled by the Engineer or Architect based on the As-Built Documents/Drawings submitted by the Contractor. They reflect the Engineer or Architect's concurring review of what changes were denoted, why they were made and where they occurred and create a record set of drawings.

1-1.05 **ASSESSMENT.** A cost imposed on the Contractor for non-compliance

with certain contractual requirements.

1-1.06 **BENEFICIAL OCCUPANCY.** The taking possession of a portion of the Work by the City for its use and/or occupancy on other than a temporary or emergency basis.

1-1.07 **BID GUARANTY.** The cashier's, certified check, irrevocable standby letter of credit, deposit of securities, or Bidder's Bond, accompanying the bid submitted by the Bidder, as a guaranty that the Bidder will enter into an agreement with the City for the performance of the Work, if the Agreement is awarded to Bidder, and the Bidder will submit the required Contract Bonds and Certificate of Insurance. Also referred to as the Bidder's Security.

1-1.08 **BIDDER.** Individual, firm, partnership, limited liability company, corporation, joint venture, or any combination thereof, submitting a Proposal for the Work, acting directly, or through a duly authorized representative.

1-1.09 **BIDDING DOCUMENTS.** Includes the Notice to Bidders, Bidding Requirements, Contract Conditions, Drawings, and Addenda.

1-1.10 **CHANGE ORDER.** Any written order to the Contractor directing an addition, deletion, or modification of the Work, or an adjustment in the Contract Price or Contract Time provided in the Contract Documents and issued after the Agreement has been signed.

1-1.11 **CITY.** The City of Roseville.

1-1.12 **CITY ATTORNEY.** The City Attorney of the City.

1-1.13 **CITY CLERK.** The City Clerk of the City.

1-1.14 **CLAIM.** A separate demand by Contractor sent by registered mail or certified mail with return receipt requested, for one or more of the following: (a) a time extension, including, without limitation, for relief for damages or penalties for delay assessed by

the City; (b) payment by the City of money or damages arising from work done by, or on behalf of, Contractor pursuant to the Contract Documents and payment for which is not otherwise expressly provided or to which Contractor is not otherwise entitled; and (c) payment of an amount that is disputed by the City.

1-1.15 **CONSTRUCTION SCHEDULE.** A list or graphic display of construction activities required for completing the Work, in a format required by the Contract Documents. The duration, start and finish date, and sequence of significant activities, critical path, float and milestones must be indicated in the Construction Schedule.

1-1.16 **CONTRACT OR AGREEMENT.** The written agreement relating to the Work to be performed, the labor, materials, and equipment to be furnished, and the payment to be made therefor. The Agreement/Contract is part of and incorporates all of the Contract Documents.

1-1.17 **CONTRACT CONDITIONS.** Includes the General Conditions, Supplemental Conditions, and Specifications.

1-1.18 **CONTRACT DOCUMENTS.** Includes those documents that form the basis of the Contract, including but not limited to, Bidding Documents, the Bid or Proposal, Contract Bonds, the Contract, all required insurance certificates or endorsements, all bonds, all required certifications or statements, Change Orders, any Contract Amendment, any City Standard which is incorporated by reference and these City of Roseville General Conditions for Buildings and Grounds.

1-1.19 **CONTRACT DRAWINGS.** The official drawings including plans, elevations, sections, detail drawings, diagrams, plated, General Notes, information and schedules thereon, or exact reproductions thereof, showing the location, character, dimension, and details

of the Work. The Contract Drawings include any drawings or plates bound within the Supplemental Conditions.

1-1.20 **CONTRACT PRICE.** The total compensation to be paid to the Contractor in accordance with the terms of the Agreement.

1-1.21 **CONTRACT TIME.** The number of Days, or portion thereof, allowed for completion of the Work, including all authorized time extensions. The effective date for commencement of the Work specified in the Notice to Proceed shall define the beginning of the Contract Time.

1-1.22 **CONTRACTOR.** Individual, firm, partnership, limited liability company, corporation, joint venture, or any combination thereof, who has entered into the Agreement with City.

1-1.23 **DAY OR DAYS.** Unless otherwise designated, Day or Days as used in the Contract Documents will be understood to mean calendar Day or Days.

1-1.24 **DEPARTMENT.** The Department for Contract Administration, as identified in the Supplemental Conditions.

1-1.25 **DIRECT COSTS.** Those cost items (including labor, materials, equipment and any subcontractor's work) that are used in the actual performance of, and are specifically and uniquely attributable to the Work or changed Work. Direct Costs do not include Overhead. Direct Costs only include the following:

A. Payroll costs for employees in the direct employ of Contractor in the performance of the Work under schedules of job classifications agreed upon by City and Contractor. Payroll costs for employees not employed full time on the Work shall be apportioned on the basis of their time spent on the Work. Payroll costs shall include salaries and

wages plus the cost of fringe benefits which shall include social security contributions, unemployment, excise and payroll taxes, workers' compensation, health and retirement benefits, sick leave, vacation and holiday pay applicable thereto. Such employees may include superintendents and foremen at the site. The expenses of performing work after regular working hours, on Saturday, Sunday or legal holidays shall be included in the above only to the extent authorized by City in writing.

B. Cost of all materials and equipment furnished and incorporated in the Work, including costs of transportation and storage thereof, and suppliers' field services required in connection therewith. All trade discounts, rebates and refunds and all returns from sale of surplus materials and equipment shall accrue to City, and Contractor shall make provisions so that they may be obtained.

C. Payments made by Contractor to the subcontractors for work performed by subcontractors. If required by City, Contractor shall obtain competitive bids from subcontractors acceptable to Contractor and shall deliver such bids to City who will then determine which bids will be accepted. If a subcontract provides that the subcontractor is to be paid on the basis of cost of the work plus a fee, the subcontractor's cost of the work shall be determined in the same manner as Contractor's cost of the work. All subcontracts shall be subject to the other provisions of the Contract Documents insofar as applicable.

D. Costs of special consultants (including engineers, architects, testing laboratories, surveyors, and accountants) employed for services specifically, and only, related to the Work.

E. Supplemental costs including the following:

1. The proportion of necessary transportation, travel and subsistence

expenses of Contractor's employees incurred in discharge of duties connected with the Work.

2. Cost, including transportation and maintenance, of all materials, supplies, equipment, machinery, appliances, office and temporary facilities at the site and hand tools not owned by the workers, which are consumed in the performance of the Work, and cost, less market value of such items used but not consumed which remain the property of Contractor.

3. Rentals of all construction equipment and machinery and the parts thereof whether rented from Contractor or others in accordance with rental agreements approved by City, and the costs of transportation, loading, unloading, installation, dismantling and removal thereof, all in accordance with terms of said rental agreements. The rental of any such equipment, machinery or parts shall cease when the use thereof is no longer necessary for the Work.

4. Sales, consumer, use or similar taxes related to the Work, and for which Contractor is liable, imposed by laws and regulations.

5. The cost of utilities (including the meter and all associated installation costs), fuel and sanitary facilities at the site.

6. Cost of premiums for additional bonds and insurance required because of changes in the Work.

1-1-26 **DIRECTOR.** Director of the Department for Contract Administration or his or her designee.

1-1.27 **EMERGENCY.** Any sudden generally unforeseen occurrence (such as a fire, flood, storm, earthquake, civil disorder, or other natural and/or man-made disaster) that has the potential to adversely affect the safety of life, the Work, and/or adjacent property; to interrupt contracts essential to the performance of the Work; and/or to cause catastrophic failure of City

equipment and/or facilities.

1-1.28 **ENGINEER OR ARCHITECT.** Professional Engineer or Architect designated for a particular project responsible for signing and sealing the permit drawings, interpretation of the drawings where ambiguities exist, review of requests for information, design Change requests and Shop Drawings, resolution of errors and omissions, and finalization of Record Documents.

1-1.29 **FINAL COMPLETION.** When the project has been completed according to the terms and conditions set forth in the Contract Documents. Final Completion is not the same as Acceptance.

1-1.30 **FORCE ACCOUNT.** Payment by force account shall mean payment on the basis of the Contractor's time and materials.

1-1.31 **GENERAL NOTES.** The written instructions, provisions, conditions or other requirements appearing on the Contract Drawings and so identified thereon, which pertain to the performance of the Work.

1-1.32 **INSTALLATION, INSTALL.** Completely assembling, erecting, and/or connecting materials, parts, components, supplies, and related equipment specified or required for the completion of the Work.

1-1.33 **LABORATORY.** Established professional laboratories authorized by the City to test materials and Work involved in the Contract.

1-1.34 **LEGAL HOLIDAYS.** Those days designated as Federal holidays or declared by the City, or otherwise specified in the Contract Documents.

1-1.35 **LIQUIDATED DAMAGES.** The amount prescribed in the Contract Documents to be paid to the City or to be deducted from any payments due or to become due the

Contractor for each day's delay in completing the whole or any specified portion of the Work beyond the time allowed in the Supplemental Conditions.

1-1.36 **NOTICE OF COMPLETION.** A legal notice filed by the City with the Placer County Recorder's Office stating that construction has been completed and accepted by the City.

1-1.37 **NOTICE TO PROCEED.** A written notice given by the City to the Contractor fixing the date on which the Contract Time will commence to run.

1-1.38 **NOTICE OF TERMINATION.** Written notice from the City to the Contractor and/or its Surety terminating the Agreement, or a portion thereof, either for convenience of the City or for default due to the Contractor's failure to perform its contractual obligations.

1-1.39 **OVERHEAD.** Business or administrative expenses (including but not limited to office expenses, administrative staff, rent, insurance, utilities) not chargeable to a particular part of the Work. The term "Overhead" shall include all of the following:

A. Payroll costs and other compensation of Contractor's officers, executives, principals (of partnerships and sole proprietorships), general managers, engineers, architects, estimators, attorneys, auditors, accountants, purchasing and contracting agents, expediters, timekeepers, clerks, and other personnel employed by Contractor whether at the Work Site or in Contractor's principal or a branch office for general administration of the Work and not specifically included in the agreed upon schedule of job classifications, all of which are to be considered administrative costs covered by the Contractor's fee.

B. Expenses of Contractor's principal and branch offices other than Contractor's office at the site.

C. Any part of Contractor's capital expenses, including interest on Contractor's capital employed for the Work and charges against Contractor for delinquent payments.

D. Cost of premiums for all bonds and for all insurance whether or not Contractor is required by the Contract Documents to purchase and maintain the same, except as provided in section 1-1.25.

E. Other overhead or general expense costs of any kind.

1-1.40 **PREMISES.** Shall mean the area within construction easements, easements, rights of entry and City owned property which surrounds the Work Site, limited by the property lines thereof. In some cases Premises may coincide with the Work Site.

1-1.41 **PROFESSIONAL ENGINEER.** An engineer licensed by the Board of Registration for Professional Engineers, State of California.

1-1.42 **PROJECT MANUAL.** A book containing all Contract Documents.

1-1.43 **PROPOSAL FORMS.** The approved forms upon which the City requires that each Bidder submit its bid with regard to the Agreement.

1-1.44 **REQUEST FOR INFORMATION (RFI).** A document issued by the Contractor requesting information concerning the Contract Documents.

1-1.45 **SAFETY.** Includes the practice of identifying potential hazards, assessing their risk, taking corrective action where possible, including and providing control measures such as engineering design, written procedures, and the personal protective equipment for workers in order to eliminate or reduce the risk for exposure in the workplace.

1-1.46 **SCHEDULE OF VALUES.** The breakdown of the Contract Price that will serve as the basis for Contractor's Applications of Payment. Any lump sum bid item

included within the Contract Price will be apportioned among values relating to specific components of the Work covered by said lump sum.

1-1.47 **SHOP DRAWINGS.** Drawings, plans, diagrams, schedules, and other data specifically prepared and submitted to the City by the Contractor, showing in detail: (a) the proposed fabrication and assembly of a special component of the Work; and (b) the Installation (form, fit and attachment details) of a special component of the Work. Shop Drawings shall be deemed to include Working Drawings, Product Data, literature, and applicable performance and test data.

1-1.48 **SPECIFICATIONS.** The technical Specifications for the Work prepared by the Director or an Engineer or Architect describing in detail the nature of the Work, its components, any performance standards, and how the Work is to be constructed.

1-1.49 **SUBCONTRACTOR.** Any individual, firm, partnership, limited liability company, corporation, joint venture, or combination thereof, other than employees of the Contractor, engaged by the Contractor to furnish services, labor, equipment and materials for a portion of the Work.

1-1.50 **SUBMITTALS.** Those documents required to be submitted by the Contractor for review by the City in accordance with the Contract Documents.

1-1.51 **SUPPLEMENTAL CONDITIONS.** The Supplemental Conditions are specific clauses modifying or supplementing these General Conditions.

1-1.52 **SUPPLIER.** Any individual, firm, partnership, limited liability company, corporation, joint venture, or combination thereof, other than employees of the Contractor, that supplies a tangible product as a portion of the Work, with services usually limited to delivery and/or required testing, and with manufacturing, fabrication, or production facilities located off

the Work Site.

1-1.53 **WORK.** The furnishing of all labor, and the furnishing and Installing of all materials, articles, supplies and equipment as specified, designated, or required by the Contract Documents.

1-1.54 **WORK SITE.** All or portion of the Premises that the Work is limited to as shown on the Contract Drawings or designated by the Director. Public streets are not included unless Work is being done within the street right-of-way.

1-1.55 **WORKING DRAWINGS.** Original drawings prepared by the Contractor and/or its Subcontractors or Suppliers, of any tier, illustrating Work required for construction that will not become an integral part of the completed Work. This includes, but is not limited to, drawings for temporary structures such as decking, bulkheads, excavation supports, utility support, groundwater control, forming, falsework, access roads, staging areas, staging plans, and diversion plans. A Working Drawing is one type of a Shop Drawing.

SECTION 2

CONTROL AND SCOPE OF THE WORK

2-1.01 **AUTHORITY OF DIRECTOR.** The Contract shall be performed in a manner satisfactory to the Director who shall decide all questions which may arise as to the quality or acceptability of materials furnished and Work performed and as to the manner of performance and rate of progress of the Work; all questions which may arise as to the interpretation of the Contract Documents; all questions as to the acceptable fulfillment of the Contract on the part of the Contractor; and all questions as to compensation. The Director shall have authority to enforce and make effective such decisions and orders in the event the Contractor fails to promptly carry out the same.

2-1.02 **INTENT OF CONTRACT DOCUMENTS.** The Contract Documents are complementary, and what is called for by one shall be as binding as if called for by all. The intent of the Contract Documents is to describe the details for the construction and completion of the Work. Where the Contract Documents describe portions of the Work in general terms, but not in complete detail, it is understood that only the best general practice shall be followed and that only materials and workmanship of the best quality are to be used. Any Work, materials, or equipment that are customarily provided, or that are reasonably inferable from the Contract Documents as being required to produce the intended result, shall be supplied, whether or not specifically called for. When words, which have a well-known technical or trade meaning are used to describe work, materials, or equipment, such words shall be interpreted in accordance with that meaning. Unless otherwise specified, the Contractor shall furnish all labor, materials, tools, equipment, and incidentals, and do all the Work involved in executing the Contract in a

satisfactory and workmanlike manner.

Reference to standard specifications, manuals or codes of any technical society, organization or association, or to the laws or regulations of any governmental authority, whether such reference be specific or by implication, shall mean the latest standard specification, manual, code, laws, or regulations in effect on the first published date of the Notice to Contractors, except as may be otherwise specifically stated. However, no provision of any referenced standard specification, manual or code (whether or not specifically incorporated by reference in the Contract Documents) shall be effective to change the duties and responsibilities of City or Contractor, or any of their consultants, agents, or employees from those set forth in the Contract Documents, nor shall it be effective to assign to City, or City's designated representative, any duty or authority to supervise or direct the furnishing or performance of the Work or any duty or authority to undertake responsibility contrary to other provisions of the Contract Documents.

The Contract Documents are divided into parts, divisions, sections and articles for convenience, organization and reference. Generally, there has been no attempt to divide the Specifications sections into work performed by the various building trades, work by separate Subcontractors, or work required for separate facilities in the project.

2-1.03 **EXAMINATION AND VERIFICATION OF CONTRACT DOCUMENTS.** The Contractor shall thoroughly examine and become familiar with all of the various parts of the Contract Documents and shall determine the nature and location of the Work, the general and local conditions (including applicable laws) and all other matters which can in any way affect the cost, progress or performance of the Work under this Agreement. Failure to make an examination necessary for this determination shall not release the Contractor from the obligations of the Agreement. No oral agreement or conversation with any officer, or employee

of the City, or with the City's designated representative either before or after the execution of the Agreement, shall affect or modify any of the terms or obligations contained in the Contract Documents.

2-1.04 **CONTRACT DRAWINGS.** The Contract Drawings consist of general drawings and show such plans, elevations, sections, details and schedules as are necessary to give a graphic and pictorial description of the contemplated construction. All authorized alterations affecting the requirements and information given on the Contract Drawings shall be in writing.

2-1.05 **COORDINATION AND INTERPRETATION OF CONTRACT DOCUMENTS.** All Contract Documents are essential parts of the Contract, and a requirement occurring in one is as binding as though occurring in all. They are intended to be complementary, and to describe and provide for a complete Work.

In the event of inconsistencies between requirements contained in different components of the Contract Documents, the precedence of the Contract Documents shall be as follows to resolve conflicts:

1. Change Orders
2. The Contract (including Addenda)
3. The Supplemental Conditions
4. Specifications
5. Contract Drawings
6. The General Conditions

Should it appear that the Work to be done or any of the matters relative thereto are not sufficiently detailed or explained in the Contract Documents, the Contractor shall submit a

Request for Information ("RFI") to the Director for such further explanations as may be necessary and shall conform to the written explanation given as if part of the Contract Documents. The decisions of the Director shall be final.

Contractor shall anticipate that it will be necessary to prepare and submit RFIs regarding the Contract Documents. The City will respond to each RFI by no later than fourteen (14) Days after receipt of the RFI, unless the RFI is of significant complexity. Furthermore, in the event that there are numerous RFIs pending, Contractor shall cooperate with the City in establishing a priority for responding to the RFIs, and potentially some RFIs may be responded to beyond the fourteen (14) Day period.

Each RFI prepared by Contractor shall be full and complete. Contractor shall prepare RFIs so as to not cause any delay to the progress of the Work and to not cause any impact to Contractor's labor productivity in the field. Contractor shall not assert any Claims for delay or interference against the City if Contractor fails to timely submit any RFI to the City, after consideration of the response period allowed for by the City.

The response to an RFI shall not, by itself, constitute a writing that authorizes Contractor to perform any Work that causes an adjustment to either the Contract Price or the Contract Time. If Contractor believes that any response to any RFI should constitute a compensable change, Contractor shall provide a Notice of Potential Claim as provided in Section 7-1.03, below. Contractor's failure to provide the required written notice shall constitute a waiver of the Contractor's right to seek a compensable change based on the RFI response.

The Contractor shall examine all Contract Documents; shall verify all figures in the Contract Documents before laying out the Work; shall promptly notify the City of all errors, inconsistencies, and/or omissions that it discovers; and, in instances where such non-

conformities are discovered, shall obtain specific instructions in writing from the City before proceeding with the Work. Contractor's performance of any Work affected by such non-conformities prior to the City's decision shall be at the Contractor's risk. Any Work that is customarily provided or that is reasonably inferable shall not relieve the Contractor from performing such work at no additional expense and/or delay, and such Work shall be performed as if fully set forth in the Contract Documents.

2-1.06 **INDEPENDENT CONTRACTOR STATUS.** The Contractor shall independently perform all Work required by the Contract Documents and shall not be considered as an agent or employee of the City, nor shall the Contractor's Subcontractors or employees be considered as subagents of the City.

The Contractor and Contractor's Subcontractors shall be licensed in accordance with the laws of the State of California and as more particularly described in the bidding documents or elsewhere in the Contract Documents.

2-1.07 **ORDER OF WORK.** When required by the Contract Documents, the Contractor shall follow the sequence of operations set forth therein. Full compensation for conforming to such requirements will be considered as included in the prices paid for the various Contract items of work, and no additional compensation will be allowed therefor.

2-1.08 **SUBMITTALS.** It shall be the Contractor's responsibility to timely submit, so as to cause no delay in the Work, all Shop Drawings, descriptive data, manuals, instructions, affidavits, samples for the various trades as required by the Supplemental Conditions and Specifications, and offers of alternatives, if any. Such Submittals shall be checked and coordinated by the Contractor with the Work of other trades involved before they are submitted to the Director for examination.

The Contractor shall deliver at least one (1) electronic copy of the Submittals to the Director, and one (1) hard copy if requested. Work requiring the submittal of working drawings, descriptive data or samples shall not begin prior to approval of said Submittal by the Director.

The time allowed for review of each Submittal will be as indicated in the Supplemental Conditions. Review time will start upon receipt of the Submittal by the Director and will end upon the Director's mailing of the Submittals to the Contractor. Defective, incomplete or partial Submittals will be returned to the Contractor unreviewed.

Submittals shall be made by a letter of transmittal that shall contain a list of all matter submitted and identification of all variations from the Contract Documents contained in the Submittal. The letter and all items accompanying the same shall be fully identified as to project name and location, Contractor's name, district, county, and Contract number, with ample cross-references to the Contract Documents, to facilitate identification of items and their location in the Work.

All Shop Drawings and supporting data, catalogs, schedules, shall be submitted as the instruments of the Contractor, who shall be responsible for their accuracy and completeness. These Submittals may be prepared by the Contractor, Subcontractors, or Suppliers, but the Contractor shall ascertain that Submittals meet all of the requirements of the Contract Documents, while conforming to structural, space, and access conditions at the point of Installation. The Contractor shall check all Submittals before submitting them to the Director.

2-1.08A **SHOP DRAWINGS.** The Contractor shall submit an electronic copy (searchable PDF) of all Shop Drawings required by the Supplemental Conditions or Specifications, and one (1) hard copy, if requested by the Director. Shop Drawings shall also be provided separately in AutoCAD format using the latest version of AutoCAD. An electronic

copy will be returned to the Contractor either approved for use, as demonstrated by a stamp, or returned for correction and resubmittal. Materials, colors and/or samples will not be returned to the Contractor. Shop Drawings include any drawing, which requires execution by a draftsman as distinguished from printed matter. The size of Shop Drawings shall not exceed twenty-four inches (24") by thirty-six inches (36").

2-1.08B **DESCRIPTIVE DATA.** The Contractor shall submit an electronic copy (searchable PDF) of each set of manufacturer's brochures or other data required by the Supplemental Conditions or Specifications, and one (1) hard copy, if requested by the Director. The City will examine such Submittals and return either an electronic copy or a hard copy approved for use or returned for correction and resubmittal.

2-1.08C **SAMPLES.** The Contractor shall submit samples of articles, materials or equipment as required by the Supplemental Conditions or Specifications. The Work shall be in accordance with the approved samples. Samples shall be removed from City property when directed or may be incorporated in the Work if approved by the Director. Samples not removed by the Contractor will become the property of the City or, at the City's option, will be removed or disposed of by the City at the Contractor's expense.

2-1.08D **MANUALS, INSTRUCTIONS AND AFFIDAVIT.**

A. Manuals and Instructions. Where operation and maintenance manuals are required by the Supplemental Conditions, the Contractor shall submit two (2) sets of manuals, suitably bound, along with two (2) electronic copies in an approved format, to the Director within forty-five (45) Days after favorable review of the equipment or facilities. If operation and maintenance manuals are approved to be provided in PDF format, text shall be provided in searchable PDF format, making proper use of PDF for headings and heading levels,

paragraphs, tables, and lists. Submitted operation and maintenance manuals shall be a collected, organized, and indexed set of bookmarked PDF documents comprising each operation and maintenance manual that corresponds to a hardcopy binder. All manuals shall be marked to indicate the specific equipment furnished for this project and shall include at a minimum:

1. Equipment summary form
2. Cover/Title page
3. Table of contents
4. Operating procedures including start-up, shutdown, normal operation, all operating modes, emergency shutdown, and safety precautions
5. Lubrication instructions (if required)
6. Preventative maintenance procedures
7. Troubleshooting and corrective maintenance procedures
8. Reinstallation instructions
9. Overhaul instructions (if applicable)
10. Parts identification list with exploded view and associated cross references
11. Recommended spare parts list
12. Operator safety requirements
13. Electrical and control system wiring drawings, including panel wiring control (ladder) diagrams, logic diagrams, loop diagrams, and interconnection diagrams
14. Panel layout and assembly drawings

15. Mechanical drawings

16. Printouts of all software programs and configuration files

17. Factory and field test procedures and results

Operation and maintenance manuals for complex equipment shall also include:

18. Alternate specified operating modes

19. Emergency shutdown instructions

20. Normal shutdown instructions

21. Long term shutdown instructions

Operation and maintenance manuals for systems comprised of separate pieces of equipment shall include a system explanation of items 4, 7, 18, 19, 20, and 21 as well as the instructions for the separate pieces of equipment.

B. Affidavits. Where required in the Supplemental Conditions or Specifications, manufacturers of equipment shall provide field service as a part of this project. Equipment shall not be considered ready for full time operation until after the authorized factory-trained and qualified manufacturer's representative for the specific equipment has checked and adjusted the equipment and certified by written affidavit that the equipment has been properly Installed, tested, adjusted, lubricated, and calibrated, and is ready for full time operation. Acceptable affidavits shall be submitted prior to completion of the Work. Affidavits shall contain the following specific wording:

"The (Name of Equipment) has been properly installed, tested, adjusted, lubricated, and calibrated, and is ready for full time operation. The installation has been inspected and has been found to be in conformance with our (the manufacturer's) standards and requirements."

No amplification, dilution, or modification of this specific wording will be permitted.

2-1.08E **ALTERNATIVES.** For convenience in designation in the Contract Documents, certain materials, articles, or equipment may be designated by a brand or a trade name or the name of the manufacturer together with catalog designation or other identifying information, hereinafter referred to generically as "designated by brand name." Except in those instances where the product is designated to match others in use in a particular improvement, either completed or in the course of completion, an alternative material, article, or equipment which is of equal quality and of the required characteristics for the purpose intended may be proposed for use provided the Contractor complies with the following requirements:

A. The Contractor shall submit its proposal for an alternative in writing. Such request shall be made in ample time to permit review and approval without delaying the Work. The Contractor shall not be entitled to an adjustment of the Contract Time or an increase in the Contract Price based on any Contractor-proposed substitution.

B. No such proposal will be considered unless accompanied by complete information and descriptive data, necessary to determine the equality of the offered materials. The Contractor shall satisfy the Director as to the comparative quality, suitability, or performance of the offered material, articles, or equipment. In the event that the Director rejects the use of such alternative materials, articles, or equipment, then one of the particular products designated by brand name shall be furnished.

C. The burden of proof as to the quality and suitability of alternatives shall be upon the Contractor and it shall furnish all information necessary as required by the Director. The Director shall be the sole judge as to the quality and suitability of alternative articles or materials and such decisions shall be final. Where use of an alternative material

involves redesign of, or changes to, other parts of the Work, the cost and time required to effect such redesign or changes will be considered in evaluating the suitability of the alternative material. Cost of redesign by the City will be borne by the Contractor.

D. Whenever classification, rating or other certification by a body such as Underwriters Laboratories (UL) or the National Electrical Manufacturers Association (NEMA) is a part of the specification for any material, Contractor's request for use of alternative articles or materials shall be accompanied by reports from the listed or equivalent independent testing Laboratory indicating compliance with the Contract Documents. The cost of all testing required to prove equality of the material proposed shall be borne by the Contractor. Approval of an alternative shall be only for the characteristics or use named in such approval, and shall not be used to change or modify any requirement of the Contract Documents.

E. At its election, the City reserves the right to consider any Contractor proposed substitution as a Cost Reduction Proposal under Section 3-1.07 of these General Conditions in the event that there is a significant savings resulting from the substitution.

The Director will examine, with reasonable promptness, such Submittals, and return of Submittals to the Contractor shall not relieve the Contractor from responsibility for deviations and alternatives from the Contract Documents, nor shall it relieve the Contractor from responsibility for errors in the Submittals. A failure by the Contractor to identify in its letter of transmittal material deviations from the Contract Documents shall void the Submittal and any action taken thereon by the Director. When specifically requested by the Director, the Contractor shall resubmit such Shop Drawings, descriptive data and samples as may be required.

If any mechanical, electrical, structural, or other changes are required for the proper Installation and fit of alternative materials, articles, or equipment, or because of deviations from

the Contract, such changes shall not be made without the approval of the Director and shall be made without additional cost to the City.

2-1.09 **DISPOSAL OF MATERIAL OUTSIDE THE WORK SITE.** Unless otherwise stated elsewhere in the Contract Documents, the Contractor shall, at its own cost and expense, make its own arrangements for disposing of materials outside the Work Site.

Except when material is to be disposed of at a landfill or recycling center, when any material is to be disposed of outside the Work Site, the Contractor shall first obtain written permission from the City to dispose of the material at the intended location. The City's approval will be contingent upon the Contractor obtaining a written permit from the property owner on whose property the disposal is to be made. Prior to the disposal of any material at the intended location, the Contractor shall submit such permit or a certified copy thereof to the City, together with a written release from the property owner absolving the City from any and all responsibility related to the disposal of material on said property.

Disposal of Hazardous Materials must be done in accordance with all laws and regulations. Copies of all required regulatory documentation including copies of final manifests shall be supplied to the City.

2-1.10 **ACCESS TO THE WORK.** The Contractor shall satisfy itself that the jurisdictions through which its operations and haul routes pass will permit such operations with respect to the type of vehicle, laden weights, frequency and dimensions of loads, hours of operation and required traffic control. All necessary permits, licenses or bonds shall be obtained and paid for by the Contractor.

2-1.11 **TEMPORARY UTILITIES.** The Contractor shall make its own arrangements with utility companies for any temporary services it may require in performance of

the Work and shall pay all costs of these services directly to these utility organizations.

2-1.12 **UTILITY FACILITIES.** The Contractor shall protect from damage those utility facilities that are to remain in place, be Installed, relocated or otherwise arranged.

The Contractor's attention is directed to the possible existence of facilities not shown, and of facilities in a location different from that, which is indicated. The Contractor shall take steps to ascertain the exact location of all facilities prior to doing any Work, which may damage such facilities or interfere with their service. Where the location of a facility is indicated or inferred from the presence of visible facilities such as buildings, meters, and junction boxes, the Contractor shall make such excavations and explorations as are necessary to ascertain the correct location. Unless provided for elsewhere in the Contract Documents, the cost of such excavations and explorations will be considered as a part of the cost of other items of Work and no additional payment will be made. Such excavations and exploratory Work shall not entitle the Contractor to an extension of time.

If the Contractor discovers underground facilities not indicated or inferred from the Contract Documents, the Contractor shall immediately give the Director written notification of the existence of those facilities. The Contractor shall determine the exact location of the underground facilities and the cost of the work will be paid for in accordance with the Contract Documents. The underground facilities shall be protected from damage as directed by the Director and the cost of that work will be paid for as extra work. The Contractor shall, if directed by the Director, repair any damage, which may occur to the underground facilities. The cost of that repair work, not due to the failure of the Contractor to exercise reasonable care, will be paid for as extra work. Damage due to the Contractor's failure to exercise reasonable care shall be repaired at the Contractor's cost and expense.

Where it is determined by the City that the rearrangement of an underground facility, the existence of which is not shown on the Contract Drawings, is essential in order to accommodate the Work, the City will provide for the rearrangement of such facility by other forces or, when so ordered by Change Order, such rearrangement shall be performed by the Contractor and will be paid for as provided under a Change Order.

The Contractor shall be responsible for the maintenance of all utility facilities placed by the Contractor in temporary locations, and all utilities within the construction area not required to be relocated but which are required to be shored or supported during the construction period. The cost of such maintenance shall be borne by the Contractor, and no other compensation shall be due the Contractor for this Work.

The cost of providing and maintaining all necessary or required temporary structures, of making any necessary repairs, replacements, or similar operations, or furnishing indemnity or other bonds, if required, and all costs required by this Section shall be paid by the Contractor and shall be included in the prices bid in the schedule for other items of work.

2-1.13 **PRESERVATION AND CLEANING.** The Contractor shall clean up the Work at frequent intervals and at other times when directed by the Director. While finish Work is being accomplished, floors, Work areas and finished areas shall be kept clean, free of dust, construction debris and trash. Upon completion of the Work, the Contractor shall remove from the Premises its construction equipment and any waste materials not previously disposed of, leaving the Premises thoroughly clean and ready for final inspection.

2-1.14 **LIMITATIONS ON WORK SITE AND PREMISES.** The Contractor shall limit its construction operations to the Work Site unless otherwise shown on the Contract Drawings or specified. The Contractor shall perform no operation of any nature over or on the

Premises except such operations as are authorized by the Contract Documents or as authorized by the Director.

2-1.15 **DUST CONTROL.** During the performance of all Work under this Contract, the Contractor shall assume all responsibility for dust control and shall furnish all labor, equipment, and means required to carry out proper and efficient measures wherever and whenever dust control is necessary to prevent the operations from producing dust damage and nuisance to persons and property. Any claims resulting from dust damage or nuisance shall be borne solely by the Contractor. The Contractor shall comply with all applicable Air Quality Act requirements.

2-1.16 **SANITATION.** The Contractor shall provide sanitary facilities for all persons working on the Work.

2-1.17 **NIGHT WORK AND NORMAL WORKING HOURS.** Normal working hours at the construction site shall be between the hours of 7:00 a.m. and 7:00 p.m. Monday through Friday. Legal holidays are excluded. Certain utility connections and street operations are anticipated to require night Work by the Contractor during low usage periods. The Contractor may also be required to prosecute the Work at night if, at any time, the Director shall deem it necessary for the progress of the Work, or if emergencies arise. The Contractor shall promptly comply with any such requirements made in writing by the Director. The Contractor will also be permitted to Work at night if Contractor satisfies the Director of the need therefor, in order to maintain the required progress or protect the Work from the elements. Certain activities are required to be performed at night for nominal progress of the Work and/or are specified to be performed at night by other portions of the Supplemental Conditions. When required, ordered, or permitted to Work at night, the Contractor shall provide sufficient and

satisfactory lighting and other facilities therefor. The Contractor shall receive no extra payment for night Work, if specified or if required to be performed during the normal progress of the Work, but compensation shall be considered as having been included in the price stipulated for the Work.

If Contractor performs work during weekends, holidays or any non-normal work hours, Contractor shall pay for required City Inspectors.

2-1.18 **LINES AND GRADES.** Unless otherwise provided in the Supplemental Conditions, the Contractor shall lay out all Work, including structures and pipelines, and shall be responsible for any errors resulting therefrom. In all questions arising as to proper location of lines and grades, the Director's decision will be final.

As part of the bid price for the construction of the improvements, the Contractor shall provide and be responsible for the layout of all Work on this project. The Contractor shall provide all necessary surveys, field staking, and positioning for the construction of all components at the proper alignment, elevations, grades, and positions, as indicated on the Contract Drawings and as required for the proper operation and function. The Contractor shall stake its Work area limits. Contractor shall perform all construction staking using a land surveyor licensed in the State of California. Contractor shall provide a staking plan prior to commencement of Work for the City's review and maintain monuments, stakes, and marks, and shall update the plan as necessary. Director, or Director's designated representative, may verify the field condition. Errors or inconsistencies in the Contract Documents discovered by the Contractor shall be reported to the Director within twenty-four (24) hours and prior to constructive forms or related improvements. Any work Installed with this requirement shall be subject to removal and replacement at the Contractor's expense.

The Contractor's lay-out shall be based on existing structures, property lines, survey control, and bench marks established by the City. All structures and pipeline connections shall be Installed based on actual elevation of existing structures to which connections are made.

The Contractor shall supply such labor as required, at no extra charge, to aid and assist the Director in checking location and grades of the Work as set by the Contractor if the Director desires to perform this checking. This shall include moving materials and equipment located between monuments and the construction Work.

2-1.19 **ARCHEOLOGICAL DISCOVERIES.** Upon discovery of prehistoric or historic artifacts, or other indicators or examples of cultural resources discovered during the course of site preparation, grading, excavation, construction or other development activities, all operations within fifty feet (50') of the find shall cease until such time as the City provides the services of a qualified archeologist to evaluate the finds and recommend appropriate action.

Prehistoric materials can include flaked stone tools (e.g., projectile points, knives and choppers) or tool making debris of obsidian, chert, quartzite and other materials, culturally darkened soil (i.e., midden, which often contains heat affected rock, ash and charcoal, shellfish remains, and cultural materials), and stone milling equipment such as mortars, pestles and hand stones. Historic material may include wood, stone, concrete or adobe footings, walls and other structural remains; debris filled wells or privies; and deposits of wood, metal, glass, ceramics and other refuse.

2-1.20 **PRESERVATION OF MONUMENTS.** Any monuments or bench marks disturbed by construction operations shall be repaired per the City's standard and promptly re-established by a registered land surveyor or civil engineer. A plat for each monument shall be furnished to the Director after the plat has been recorded with the Placer

County Recorder's Office at no additional cost to the City. The recorded plat shall serve as a record of the re-establishment of said existing survey points.

2-1.21 **CONFORMITY WITH CONTRACT DOCUMENTS.** Work and materials shall conform to the lines, grades, cross sections, dimensions and material requirements, including tolerances, required by the Contract Documents. Although measurement, sampling and testing may be considered evidence as to such conformity, the City shall be the sole judge as to whether the Work or materials deviate from the Contract Documents. At its option, the City may elect to accept deviations from the Contract Documents with appropriate backcharge Assessments against the Contractor, and, if such an election is made, the City will provide written notice to the Contractor of such acceptance.

2-1.22 **FINAL CLEANUP.** Prior to final Acceptance of the Work, the Contractor shall thoroughly clean the Premises, remove all temporary structures built by or for the Contractor, and remove all equipment and surplus construction material and debris from the area. The entire project, before Acceptance by the City, shall be left in a neat and clean condition. All Work areas and temporary construction areas shall be returned to essentially the same conditions existing before the commencing of project construction.

2-1.23 **AS-BUILT DOCUMENTS AND DRAWINGS.** The Contractor shall maintain one set of the full size prints furnished by the City and mark thereon in color any deviations from plan dimensions, elevations, or orientations. Also, the Contractor shall locate on said prints, all underground facilities, such as piping, conduits and tanks by accurate field measurement from structure walls, corners, etc. The Contractor shall submit the prints and an electronic CD (searchable PDF or source file format such as AutoCAD) in good condition to the Director upon completion of the job as a condition of Acceptance of the project. Marked prints

shall be updated at least once each week and shall be available to the Director for review as to currency prior to developing partial payment estimates. After the completion of testing, but prior to Acceptance, the Contractor shall submit As-Built electrical drawings in color and an electronic CD showing all components and their wiring, and as specified in the Supplemental Conditions.

2-1.24 **SUPERINTENDENCE.** The Contractor shall supervise and direct the Work, which shall be performed in accordance with the requirements of the Contract Documents. The Contractor shall be solely responsible for implementation of all construction means, methods, techniques, sequences, and procedures and for coordination of all portions of the Work under the Agreement. The Contractor shall be solely responsible for the safety of its employees, Subcontractors of any tier, Suppliers, visitors to the Contractor, and other third parties associated with the Contractor.

The Contractor shall designate in writing before starting Work, an authorized representative who shall have the authority to represent and act for the Contractor.

When the Contractor is comprised of two (2) or more persons, firms, partnerships, or corporations functioning on a joint venture basis, said Contractor shall designate in writing before starting Work, the name of one authorized representative who shall have the authority to represent and act for the Contractor. Instances of misconduct, contract non-compliance, unsatisfactory performance, or incompetence by these personnel shall be grounds for the City to direct Contractor to dismiss them from the Project. Contractor shall immediately comply with the City's request for dismissal, at no cost to the City, and shall designate a replacement, which shall be subject to approval by the City.

Said authorized representative shall be present at the site of the Work at all times while Work is actually in progress on the Contract. When Work is not in progress and during periods

when Work is suspended, arrangements acceptable to the Director shall be made for any Emergency Work that may be required.

Whenever the Contractor or its authorized representative is not present on any particular part of the Work where it may be desired to give direction, orders will be given by the Director, which shall be received and obeyed by the superintendent or foremen who may have charge of the particular Work in reference to which the orders are given.

Any order given by the Director, not otherwise required by the Supplemental Conditions to be in writing, will on request of the Contractor, be given or confirmed by the Director in writing.

2-1.25 **CHARACTER OF WORKER.** If any Subcontractor or person employed by the Contractor shall appear to the Director to be incompetent or to act in a disorderly or improper manner, he or she shall be removed immediately on the requisition of the Director, and such person shall not again be employed on the Work.

2-1.26 **INSPECTION.** The Contractor shall at all times permit the Director to inspect the Work or any part thereof. The Contractor shall maintain proper facilities and provide safe access for such inspection by the Director to all parts of the Work, and to the shops where the Work is in preparation. Work shall not be covered up until authorized by the Director and the Contractor shall be solely responsible for notifying the Director where and when such Work is in readiness for inspection and testing. Should any such Work be covered without authorization, it shall, if so ordered, be uncovered at the Contractor's expense.

Unless otherwise designated as normal working hours, whenever the Contractor intends to perform Work on Saturday, Sunday, or a Legal Holiday, the Contractor shall give notice to the Director of such intention forty-eight (48) hours prior to performing such Work, or such longer

period as may be specified so that the Director may make necessary arrangements.

The observation and/or approval of the workmanship or materials by the City shall not relieve the Contractor of any obligations to fulfill the requirements of the Contract Documents. Workmanship and materials not meeting such requirements shall be corrected and unsuitable Work or material may be rejected, notwithstanding that such Work or materials have been previously observed and/or approved by the City, or payment therefor has been included in a progress estimate.

The City may order re-examination of questioned Work at any time before final Acceptance. If so ordered, the Contractor shall uncover the Work. If such work is found to be in accordance with the Contract Documents, the City will pay for the cost of uncovering, removing, recovering and replacing the parts removed; but if such Work so exposed or examined is not in accordance with the Contract Documents, the uncovering, removal, recovering and replacement shall be at the Contractor's expense. Work that has been covered prior to observation by the City does not qualify as re-examined work; the City may order such work uncovered for observation without payment of any costs.

2-1.27 **REMOVAL OF REJECTED AND UNAUTHORIZED WORK.** All Work which has been rejected shall be remedied, or removed and replaced by the Contractor in a manner acceptable to the Director and no compensation will be allowed the Contractor for such removal, replacement, or remedial Work.

Any Work done beyond the lines shown on the Contract Drawings or established by the Director, or any Work done without written authority will be considered as unauthorized Work and will not be paid for. Upon order of the Director, unauthorized Work shall be remedied, removed, or replaced at the Contractor's expense.

Upon failure of the Contractor to comply promptly with any order of the Director made under this section, the Director may cause rejected or unauthorized Work to be remedied, removed, or replaced, and the costs thereof will be deducted from any moneys due or to become due the Contractor.

SECTION 3

CHANGES IN THE WORK

3-1.01 **CHANGES.** The Director, without invalidating this Agreement and without notice to Contractor's surety, may order changes in the Work, consisting of additions or deletions, or other revisions. The Contract Price and the Contract Time shall be adjusted accordingly. All such changes in the Work, including in the Contract Price and the Contract Time, shall be authorized only by Contract Change Order, signed by the Director.

If Contractor claims that performance of any work entitles it to additional compensation or to an extension of time for performance of the Work, Contractor shall provide written notice to the City of any such claim prior to undertaking such work. Contractor shall provide written notice of any anticipated impacts to the Contract Price or Contract Time within three (3) Days of discovering such impact, by submitting a Notice of Potential Claim described in Section 7-1.03 below, or notice of delay as described in Section 6-1.09 below. If the Director refuses to issue a Change Order for such work, Contractor shall perform that work if directed or obligated to do so and shall submit a complete and specific Claim for additional compensation and/or extension of time for performance within fifteen (15) Days after such work is performed, as described in Section 7-1.03 below. Failure to provide written notice of claims prior to undertaking such work, failure to provide a timely Notice of Potential Claim, or failure to submit timely a complete and specific Claim for additional compensation and/or extension of the time for performance, shall be deemed a waiver and abandonment of any such Claim. No Claim, dispute or controversy shall interfere with the progress or performance of the Work and the Contractor shall proceed with the Work as directed by the Director. Failure to so proceed shall amount to a

default under this Agreement.

3-1.02 **PROPOSED CHANGE ORDERS.** The Contractor will be notified in writing of a proposed Change Order describing the intended change. Within fifteen (15) Days after receipt of a written request, the Contractor shall submit its proposed price to be added or deducted from the Contract Price due to the change and its estimate of the extent of the adjustment in the Contract Time, if any. The Contractor's proposed price to be added to or deducted from the Contract Price shall be supported by a detailed estimate of cost prepared by the Contractor, vendor or Supplier. The Contractor's proposed price submittal shall be accompanied by a statement of the time necessary for the changed Work, together with a description of how this time will be incorporated into the current Construction Schedule. The Contractor shall upon request by the Director permit inspection of its original Contract estimate, subcontract agreements or purchase orders relating to the change.

If agreement is reached on the adjustment in compensation as provided in Section 3-1.05, "Contract Price Adjustment," of these General Conditions, the Contractor shall proceed with the Work as changed at the agreed price.

If the Contractor and the Director fail to agree as to the adjustment in compensation for the performance of the changed Work, the Contractor, upon written order from the Director, shall proceed immediately with the changed Work and the Contract Price shall be adjusted in accordance with Section 3-1.06, "Force Account Payment," of these General Conditions.

If the Contractor fails to submit its cost estimate within such fifteen (15) Day period, the Contractor shall commence the Work as changed immediately upon receipt of written order of the Director, and the Contract Price will be adjusted in accordance with the Director's cost estimate for the changed Work.

3-1.03 **EMERGENCY AND INDETERMINATE TYPE CHANGE ORDERS.** Changes in the Work made necessary by an Emergency, as determined by the Director, or changes of a kind where the extent of the Work cannot be determined until completed, may be authorized by the Director in writing. The Change Order shall state that it is issued pursuant to this Section 3-1.03. Upon receipt of an authorized Change Order or other written order of the Director, the Contractor shall proceed with the ordered Work and the Director will maintain a daily job record containing a detailed summary of all labor, materials and equipment required for the changed Work.

Within fifteen (15) Days after receiving a written request, the Contractor shall submit a detailed estimate of cost for the change and any requested change in Contract Time in the same manner as required for proposed Change Orders in Section 3-1.02 of these General Conditions.

3-1.04 **EXECUTED CHANGE ORDER.** A Contract Change Order signed by both the Director and the Contractor is an "executed Contract Change Order." By signing the Contract Change Order, the Contractor agrees that the specified compensation constitutes full compensation for the changed Work, including payment for interruption, disruption, acceleration, extended Overhead, delay or any other "impact" claim or "ripple effect" claim. The Contractor specifically understands and agrees that its execution of the Contract Change Order shall constitute a waiver of any right for the Contractor to claim any additional compensation with respect to the subject matter of the Contract Change Order.

3-1.05 **CONTRACT PRICE ADJUSTMENT.** If a Contract Change Order provides for an adjustment to the Contract Price, the amount of such adjustment shall be determined by one of the following methods, or a combination thereof, as determined by the City and in its sole discretion:

A. Lump sum. The Contractor and the City may agree on a lump sum amount for the Change Order. At the City's request, the Contractor will provide pricing for the work. Maximum markups for Contract Change Orders paid for using lump sum pricing shall be paid for in the same manner and in the same amounts as markups for Force Account work, as described in Section 3-1.06 below.

B. Unit Prices. The unit prices set forth in the Contractor's Schedule of Bid Prices will be utilized where they are applicable and acceptable to the City. The Contractor's unit prices shall remain firm and shall not be subject to adjustment unless and until the actual quantity of work is increased or decreased by Contract Change Order in an amount greater than twenty-five percent (25%) from the estimated quantity indicated for such item. No markups will be given for Contract Change Orders paid for using unit prices.

Unit prices for new items included in the Contract Change Order but not included in the original bid shall be as mutually agreed upon or, in the absence of agreement, as determined by the City in the same manner as if the work were to be paid for on a Force Account basis, as described in Section 3-1.06 below.

C. Force Account. Where the City and the Contractor are unable to agree on lump sum pricing and if the City does not elect to utilize the unit prices in Contractor's bid, or such unit prices are not applicable, the changed work will be performed and tracked by the Contractor as Force Account work, as described in Section 3-1.06 below. The City will pay for such work, including markups, properly attributable to the change in accordance with those Force Account provisions.

D. Eliminated Items. The City reserves the right to delete any bid item of Work in its entirety. The City makes no representation that any work under a bid item of Work

will be performed, and all work may be subject to a Contract Change Order that deletes such work. Bid items are distinct and severable from the other bid items, and the Contractor shall not be entitled to any anticipated profit, unabsorbed Overhead, or other indirect expense attributable to the deleted item, except as provided immediately below with regard to Force Account mark-ups on the direct and verifiable costs incurred prior to the City's order that deletes the work.

Should any bid item of Work be eliminated in its entirety and not accounted for as described immediately above and, in the absence of an executed Contract Change Order covering such elimination, payment will be made to the Contractor for actual direct and verifiable costs incurred in connection with such eliminated bid item if incurred prior to the date of notification in writing by the City of such elimination. If acceptable material is ordered by the Contractor for the eliminated item prior to the date of notification of such elimination by the City, and if orders for such material cannot be canceled, it will be paid for at the actual direct and verifiable cost to the Contractor. Actual direct costs shall include documented vendor shipping fees, Supplier restocking fees, if applicable, and Contractor handling costs directly related to the eliminated item(s). In such case, the material paid for shall become the property of the City and the actual cost of any further handling will be paid for by the City. If the material is returnable to the vendor and if the City so directs, the material shall be returned and the Contractor will be paid for the actual direct cost of charges made by the vendor for returning the material. The actual direct cost of handling returned materials will also be paid for by the City. The actual direct and verifiable costs to be paid by the City as provided herein will be computed in the same manner as if the work were to be paid for on a Force Account basis, including the application of Force Account mark-ups to said costs.

3-1.06 **FORCE ACCOUNT PAYMENT.** When Work performed pursuant to a

Change Order is to be paid for on a Force Account basis, the Contractor's labor, materials and equipment used in the performance of such Work shall be subject to the approval of the City, and the compensation will be determined as set forth below in this section.

3-1.06A **LABOR.** The Contractor will be paid an amount based on the actual cost for the workers (including foremen when authorized by the Director) used in the actual and direct performance of the Work. All labor costs associated with Overhead, whether field or home office, are specifically excluded herein, as those labor costs are covered by the below mark-ups. The cost of labor, whether the employer is the Contractor, Subcontractor or other forces, shall include employer payments; assessment of benefits required by lawful labor union collective bargaining agreements; compensation insurance payments; contributions made to the State pursuant to the Unemployment Insurance Code; and for taxes paid to the Federal Government pursuant to the Social Security Act of August 14, 1935, as amended. No labor cost will be recognized at a rate in excess of the wages prevailing in the locality at the time the Work is performed, nor will the use of a labor classification, which would increase the cost, be permitted unless the Contractor establishes to the complete satisfaction of the Director the necessity for payment at a higher rate.

3-1.06B **MATERIALS.** Only materials furnished by the Contractor and necessarily used in the performance of the Work will be paid for. Such cost of materials may include the costs of procurement, transportation and delivery if necessarily incurred. If a cash or trade discount by the actual supplier is available to the Contractor, it shall be credited to the City. If materials are procured by the purchaser by any method which is not a direct purchase from and a direct billing by the actual supplier to such purchaser, the cost of such materials shall be deemed to be the price paid to the actual supplier plus the actual costs, if any, incurred in the

handling of such materials. If the materials are obtained from a supply or source owned wholly or in part by the purchaser, the cost of such materials shall not exceed the price paid by the purchaser for similar materials furnished from said source on Bid items or the current wholesale price for such materials delivered to the job site, less any discounts as provided herein, whichever is lower. If, in the opinion of the Director, the cost of materials is excessive, or if the Contractor fails to furnish satisfactory evidence of the cost to it from the actual supplier within sixty (60) Days after the date of delivery of the materials or within fifteen (15) Days after Acceptance of the Agreement, whichever occurs first, the cost of the materials shall be deemed to be the lowest current wholesale price at which similar materials are available in the quantities required, less any discounts provided herein. The Department reserves the right to furnish such materials required by the Change Order as it deems advisable, and the Contractor shall have no claim for cost or markups on material furnished by the Department.

3-1.06C **EQUIPMENT.** The Contractor will be paid an amount based on the actual cost for the use of equipment directly required and approved by the Director in the performance of the changed Work. No payment will be made for time while equipment is inoperative due to breakdowns or on Days when no Work is performed. In addition, the rental time shall include the time required to move the equipment to the Work from the nearest available source of such equipment, and to return it to the source. If such equipment is not moved by its own power, then loading and transportation costs will be paid. Moving time, loading and transportation costs will only be paid if the equipment is used exclusively on the changed Work during the time between move in and move out. Individual pieces of equipment having a replacement value of One Thousand Dollars ($1000) or less shall be considered to be tools or small equipment, and no payment will be made therefore. For equipment owned,

furnished, or rented by the Contractor, no cost therefore shall be recognized in excess of the equipment rental rates published by Caltrans at the following website address: http://www.dot.ca.gov/hq/construc/equipmnt.html. Equipment located at a Work Site and utilized on non-Force Account work shall not eligible for standby payment, and shall be charged on a Force Account basis only when solely performing pre-approved Force Account work tasks.

3-1.06D **MARKUPS.** When a Change Order increases the cost of the Work, the Contractor may add the following maximum markups to its actual costs of labor, materials, or equipment rental:

15 percent for labor;

10 percent for materials; and

5 percent for equipment rental.

The above markups include full compensation, covering the costs of all supervision, bonds, profit, Overhead, and other general expenses not specifically designated as a direct cost in Sections 3-1.06A through 3-1.06C above. The total payment (i.e., direct cost plus applicable markups) shall be deemed to be the actual cost of such work and shall constitute full compensation therefor. The Contractor specifically understands and agrees that such payment shall include any Contractor costs for interruption, disruption, and acceleration, extended Overhead, Change Order management, delay or other "impact" claim or "ripple effect" claim.

When work paid for on a Force Account basis is performed by forces other than the Contractor's own forces, the maximum allowable mark-ups for the Subcontractors' costs shall be fifteen percent (15%) for the cost of labor, ten percent (10%) for the cost of materials, and five percent (5%) for the cost of rented equipment. In these situations where the work is being performed by Subcontractors, the Contractor will only be entitled to an additional five percent

(5%) mark-up and will not be entitled to receive the additional mark-ups specified in this section.

When a Change Order decreases the cost of the Work, the reduction in cost shall include a five percent (5%) markup on the estimated cost for furnishing the labor, materials and equipment, which would have been used on such Work, had the Change Order not been issued.

When a Change Order involves both added Work and deleted Work, the markup or markups to be used shall be as follows:

The actual costs of labor, materials, and equipment rental for added and deleted Work shall be calculated separately without adding markups. If the difference between the calculated costs for labor results in an increased cost, a markup of fifteen percent (15%) shall be applied to the increased cost. If the difference between the calculated costs of materials or equipment rental results in an increased cost, a markup of ten percent (10%) and five percent (5%) respectively, shall be applied to the increased costs of materials or equipment rental, as the case may be. If the difference between the calculated costs for labor, materials or equipment rental results in a decreased cost, a markup of five percent (5%) shall be applied to the decreased costs of labor, materials or equipment rental, as the case may be.

Contractor shall not add mark-ups on work performed and billed by City staff nor add mark-ups to successive iterations of proposed Change Order cost proposals returned to Contractor by the City due to incomplete or inaccurate information being originally submitted by the Contractor. If the Contract Price increases by the issuance of Change Orders, the penal amounts of the bonds required shall increase accordingly.

3-1.06E **RECORDS.** The Contractor shall maintain its records in such a manner as to provide a clear distinction between the direct costs of extra work paid for on a Force Account basis and the costs of other operations.

From the above records, the Contractor shall furnish the City completed daily extra work reports, on forms acceptable to the City, for each Day's extra work to be paid for on a Force Account basis. The daily extra work reports shall itemize the materials used, and shall cover the direct cost of labor and the charges for equipment rental, whether furnished by the Contractor, Subcontractor, or other forces. The daily extra work reports shall provide names and identifications and classifications of workers, the hourly rate of pay and hours worked, and also the size, type, and identification number of equipment, and hours operated. Daily extra work and Force Account reports (actual or claimed) shall be signed by both the City's and the Contractor's representatives within twenty-four (24) hours of the performance of the work.

Valid copies of vendor's invoices shall substantiate material charges. Such invoices shall be submitted with the daily extra work reports, or if not available, they shall be submitted with subsequent daily extra work reports. Should said vendor's invoices not be submitted within sixty (60) Days after the date of delivery of the material or within fifteen (15) Days after the Acceptance of the Agreement, whichever occurs first, the City reserves the right to establish the cost of such materials at the lowest current wholesale prices at which said materials were available in the quantities, less any discounts.

The City will compare its records with the completed daily extra work reports furnished by the Contractor and make any necessary adjustments. When these daily extra work reports are agreed upon and signed by both parties, said reports shall become the basis of payment for the work performed, but shall not preclude subsequent adjustment based on a later audit by the City.

The Contractor's cost records pertaining to Work paid for on a Force Account basis shall be open to inspection or audit by representatives of the City during the life of the Agreement and for a period of not less than three (3) years after the date of Agreement completion and the

Contractor shall retain such records for that period. Where payment for materials or labor is based on the cost thereof to forces other than the Contractor, the Contractor shall make every reasonable effort to insure that the cost records of such other forces will be open to inspection and audit by representatives of the City on the same terms and conditions as the cost records of the Contractor. If an audit is to be commenced more than sixty (60) Days after the date of Acceptance of the Agreement, the Contractor will be given fifteen (15) Days' notice of the time when such audit is to begin.

3-1.07 **COST REDUCTION PROPOSALS.** The City encourages the Contractor to submit Cost Reduction Proposals whenever the Contractor identifies areas and/or instances in which there can be savings to the Work. Contractor may submit to the City, in writing, proposals for modifying the plans, Specifications or other requirements of the Agreement for the sole purpose of reducing the total cost of construction, including the time for completion of the Work. The City may consider such Cost Reduction Proposals and, if accepted, the Agreement will be equitably adjusted. The City has no obligation to consider or accept Cost Reduction Proposals.

SECTION 4

CONTROL OF MATERIALS

4-1.01 **MATERIALS.** The Contractor shall furnish all materials required to complete the Work, except materials that are designated in the Supplemental Conditions to be furnished by the City and materials furnished by the City in accordance with Section 3, "Changes in the Work," of these General Conditions.

Unless otherwise specified in the Supplemental Conditions, materials furnished by the Contractor for incorporation into the Work shall be new. When the quality or kind of materials, articles, or equipment is not particularly indicated, then the quality or kind thereof shall be similar to those that are indicated.

Articles or materials to be incorporated in the Work shall be stored in such a manner as to insure the preservation of their quality and fitness for the Work, and to facilitate inspection.

All materials which do not conform to the requirements of the Contract Documents as determined by the Director, will be rejected whether in place or not. Rejected material shall be removed immediately from the site of the Work, unless otherwise permitted by the Director. No rejected material, the defects of which have been subsequently corrected, shall be used in the Work, unless approval in writing has been given by the Director. Upon failure of the Contractor to comply promptly with any order of the Director made under these provisions, the Director shall have the authority to cause the removal and replacement of rejected material and to deduct the cost thereof from any moneys due or to become due the Contractor.

Manufacturer's warranties, guaranties, instruction sheets and parts lists, which are furnished with certain materials incorporated in the Work, shall be delivered to the Director

before Acceptance of the Contract.

Unless otherwise designated in the Supplemental Conditions or Specifications, materials furnished by the City will be delivered to the job site. Materials furnished by the City that are designated in the Supplemental Conditions as available at locations other than the job site shall be hauled to the site of the Work by the Contractor at its expense, including any necessary loading and unloading that may be involved.

The Contractor will be held responsible for all materials furnished to it, and shall pay all demurrage and storage charges. City-furnished materials lost or damaged from any cause whatsoever shall be replaced by the Contractor. The Contractor will be liable to the Department for the cost of replacing City-furnished material and such costs may be deducted from any moneys due or to become due the Contractor.

4-1.02 **PRODUCT AND REFERENCE STANDARDS.** When descriptive catalog designations, including manufacturer's name, product brand name, or model number are referred to in the Contract Documents, such designations shall be considered as being those found in industry publications in effect on the day the Notice to Contractors for the Work is dated, except as may be otherwise stated.

When standards or test designations of the Federal Government, trade societies, or trade associations are referred to in the Contract Documents by specific date of issue, these shall be considered as part of the Contract. When such references do not bear a date of issue, the edition in effect on the day the Notice to Contractors for the Work is dated shall be considered as part of the Contract.

4-1.03 **SAMPLING AND TESTING OF MATERIALS.** Unless otherwise specified, all tests shall be performed in accordance with the methods used by the State

Department of Transportation (Caltrans) and shall be made by the Director or his or her designated representative.

The State Department of Transportation has developed test methods for testing the quality of materials and Work. These test methods are identified by a California Test followed by the serial number. Copies of individual tests are available at the State Department of Transportation Laboratory, Sacramento, California, and will be furnished to interested persons upon request.

Whenever a reference is made in the Supplemental Conditions to a California Test by number, it shall mean the California test in effect on the day the Notice to Contractors for the Work is dated.

Whenever the Supplemental Conditions provide an option between two (2) or more test methods, the Director will determine the test method to be used.

Whenever a Supplemental Condition, manual, or test designation provides for test reports (such as certified mill test reports) from the manufacturer, copies of such reports, identified as to the lot of material, shall be furnished to the Director. The manufacturer's test reports shall supplement the inspection, sampling and testing provisions of this Section 4-1.03 and shall not constitute a waiver of the City's right to inspect. When material which cannot be identified with specific test reports is proposed for use, the Director may at his or her discretion, select random samples from the lot for testing. Testing specimens from the random samples, including those required for retest, shall be prepared in accordance with the referenced Supplemental Conditions and furnished by the Contractor at its expense. The number of such samples and test specimens shall be entirely at the discretion of the Director.

When requested by the Director, the Contractor shall furnish, without charge, samples of

all material entering into the Work, and no material shall be used prior to approval by the Director, except as provided in Section 4-1.04, “Certificates of Compliance,” of these General Conditions.

A. Inspection and Access for Testing. The Contractor shall provide safe access for the Director and his or her inspectors to adequately inspect the quality of Work and conformance with the General and Supplemental Conditions. The Contractor shall provide adequate lighting, ventilation, ladders and other protective facilities as may be necessary for the safe performance of inspections.

The Contractor shall submit samples or specimens of such materials to be furnished or used in the Work as the Director may require. The Contractor shall furnish the Director all necessary labor and facilities for such things as excavation in the compacted fill to depths required to take samples.

Inspections, tests, or favorable review by the Director or others shall not relieve the Contractor from its obligations to perform the Work in accordance with the requirements of the Contract Documents.

Work covered without the favorable review or consent of the Director shall, if required by the Director, be uncovered for examination at the Contractor's expense.

If the Engineer, Architect, or Director considers it necessary or advisable that covered Work be inspected or tested by others, the Contractor, at the Director's request, will uncover, expose or otherwise make available for observation, inspection or testing as the Director may require, that portion of the Work in question, furnishing all necessary labor, materials, tools, and equipment. If it is found that such Work is defective, the Contractor will bear all the expenses of such uncovering, exposure, observation, inspection and testing and of

satisfactory reconstruction. If, however, such Work is not found to be defective and the Work was not covered without favorable review of the Director, the Contractor will be allowed an increase in the Contract Price or an extension of the Contract Time, or both, to cover its costs directly attributable to such uncovering, exposure, observation, inspection, testing, and reconstruction and an appropriate Change Order shall be issued.

Whenever the Contractor varies the period during which Work is carried on each Day, the Contractor shall give due notice to the Director so that proper inspection may be provided. Any Work done in the absence of the Director may be subject to rejection. Proper facilities for safe access for inspection to all parts of the Work shall at all times be maintained for the necessary use of the Director and other agents of the City. Authorized representatives and agents of the Director shall be permitted access to inspect all Work and materials wherever it is required for preparation of progress reports, and the Contractor shall provide proper facilities for such access and inspection.

It is the Contractor's responsibility to supervise the Work and complete the project in accordance with the Contract Documents. In the course of managing that effort, the Contractor shall generate its own punch lists as deemed necessary. The Director may prepare punch lists for the Director's own use in communicating with the Contractor; however, the Director shall be under no obligation to prepare punch lists for the Contractor. In general, the Director will prepare punch lists only after the Contractor has given the Director written notice that the subject Work is completed and tested in accordance with the Contract Documents and is ready for operation and/or use and/or occupancy. Failure of the Director to include an item in a punch list shall not relieve the Contractor of its duty to satisfactorily complete all Work required by the Contract Documents.

Upon Final Completion of the construction Work and request by the Contractor, the Director will conduct a final inspection as a basis for recommending to the City that the Work be accepted.

B. Field and Materials Testing. Where the Supplemental Conditions require Work to be specially field tested or approved, it shall be tested only in the presence of the Director after timely notice of its readiness for inspection and test, and the Work after testing shall be covered up only upon the consent thereto of the Director.

The results of any tests made are for the information of the Director. Regardless of any test results, the Contractor is solely responsible for the quality of workmanship and materials and for compliance with the requirements of the Contract Drawings and Supplemental Conditions.

Except as specifically required under the Supplemental Conditions, all tests by the Director of materials furnished by the Contractor will be done in accordance with commonly recognized standards of national organizations. The Contractor shall furnish such samples of all materials as required by the Director without charge. No material shall be used unless it has been favorably reviewed by the Director.

Where such inspection and testing are to be conducted by an independent Laboratory or agency, the sample or samples of materials to be tested shall be selected by such Laboratory or agency, or the Director, and not by the Contractor.

C. Costs of Testing.

1. Initial Services: The City shall furnish and pay for all initial testing services required by the Contract Documents. When initial tests indicate non-compliance with the Contract Documents, the cost of initial tests associated with that non-compliance will be

deducted by the City from the balance owed the Contractor. The Contractor shall furnish samples of materials for testing as may be required by the Director. Such samples shall be furnished without cost to the City.

2. Retesting: When initial tests indicate non-compliance with the Contract Documents, all subsequent retesting occasioned by the non-compliance shall be performed by the same testing Laboratory and the cost thereof will be deducted by the City from the balance owed the Contractor. Contractor shall be billed for each additional test.

3. Contractor Convenience Testing: Inspection or testing performed exclusively for the Contractor's convenience shall be the sole responsibility of the Contractor.

4. Additional Tests and Inspections: When in the opinion of the Director additional tests or inspections are required because of the manner in which the Contractor executes its Work, such tests and inspections shall be paid for by the City, but will be deducted from the Contract Price. Examples of such tests and inspections are tests of materials substituted for previously accepted materials or substituted for specified materials, retests made necessary by failure of material to comply with the requirements of the Specifications, load tests made necessary because of portions of the structure not fully meeting Specifications or plan requirements, etc.

4-1.04 **CERTIFICATES OF COMPLIANCE.** A Certificate of Compliance shall be furnished prior to the use of any materials for which the Supplemental Conditions require that such a Certificate be furnished. In addition, the Director may permit the use of certain materials or assemblies prior to sampling and testing if accompanied by a Certificate of Compliance. The Certificate shall be signed by the manufacturer of the material or the manufacturer of assembled materials and shall state that the materials involved comply in all

respects with the requirements of the Supplemental Conditions. A Certificate of Compliance shall be furnished with each lot of such materials delivered to the Work and the lot so certified shall be clearly identified in the Certificate.

All materials used on the basis of a Certificate of Compliance may be sampled and tested at any time. The fact that material is used on the basis of a Certificate of Compliance shall not relieve the Contractor of responsibility for incorporating material in the Work which conforms to the requirements of the Contract Documents and any such material not conforming to such requirements will be subject to rejection whether in place or not.

The Department reserves the right to refuse to permit the use of material on the basis of a Certificate of Compliance.

The form of the Certificate of Compliance and its disposition shall be as directed by the Director.

SECTION 5

LEGAL RELATIONS AND RESPONSIBILITY

5-1.01 **LAWS TO BE OBSERVED.** The Contractor shall keep informed of and observe, and comply with and cause all of its agents and employees to observe and comply with, all prevailing Federal and State laws, and rules and regulations made pursuant to said Federal and State laws, and county and municipal ordinances, and regulations, which in any way affect the conduct of the Contract. If any conflict arises between provisions of the Contract and any such law above referred to, the Contractor shall notify the Director at once in writing. To the fullest extent allowed by law, the Contractor shall defend, indemnify, and save and hold harmless the City or any of its officers, agents, employees, and volunteers against any claim or liability arising from or based on the violation of any such law, rule, or regulation, whether by itself or its agents or employees.

5-1.02 **HOURS OF LABOR.** Eight (8) hours labor constitutes a legal Day's work. The Contractor or Subcontractor shall, as a penalty to City, forfeit Twenty-five Dollars ($25) for each worker employed in the execution of the contract by the respective Contractor or Subcontractor for each calendar day during which such worker is required or permitted to work more than eight (8) hours in any one (1) calendar day and forty (40) hours in any one (1) calendar week in violation of the provisions of the Labor Code, and in particular, Section 1810 to Section 1815, thereof, inclusive, except that Work performed by employees of Contractors in excess of eight (8) hours per day, and forty (40) hours during any one (1) week, shall be permitted upon public work upon compensation for all hours worked in excess of eight (8) hours per day at not less than one and one-half (1-1/2) times the basic rate of pay, as provided in said

Section 1815. In addition, Contractor and/or its Subcontractors may be required to pay double the basic rate of pay for all hours worked in excess of twelve (12) hours in any workday and under other circumstances. (See California Code of Regulations, Title 8, Sections 16100(c)(6) and (16200(a)(3)(F) and applicable Department of Industrial Relations prevailing wage determinations.)

5-1.03 **NONDISCRIMINATION.**

A. Attention is directed to Labor Code Section 1735, which reads as follows:

"A contractor shall not discriminate in the employment of persons upon public works on any basis listed in subdivision (a) of Section 12940 of the Government Code, as those bases are defined in Sections 12926 and 12926.1 of the Government Code, except as otherwise provided in Section 12940 of the Government Code. Every Contractor for public works who violates this section is subject to all the penalties imposed for a violation of this chapter."

B. During the performance of this Contract, Contractor and its Subcontractors shall not unlawfully discriminate against any employee or applicant for employment because of race, religious creed, color, national origin, ancestry, physical disability, mental disability, medical condition, genetic information, marital status, sex, gender, gender identity, gender expression, age, sexual orientation, or military and veteran status. The Contractor and Subcontractors shall insure that the evaluation and treatment of their employees and applicants for employment are free of such discrimination. The Contractor and Subcontractors shall comply with the provisions of the California Fair Employment and Housing Act (Government Code §12900, et seq.) and the applicable regulations promulgated thereunder (California Code of Regulations, Title 2, §7285.0 et seq.) and other applicable State and Federal regulations and City

policies pertaining to nondiscrimination and affirmative action which are incorporated into this Agreement by reference and made a part hereof as if set forth in full. The Contractor and its Subcontractors shall give written notice of their obligations under this clause to labor organizations with which they have a collective bargaining or other agreement.

C. Contractor shall include the nondiscrimination and compliance provisions of this clause in all subcontracts to perform Work under the agreement.

5-1.04 **PREVAILING WAGE.** The Contractor and any Subcontractor shall comply with Labor Code Sections 1770 et seq. In accordance with said Section 1775 the Contractor and any Subcontractor under the Contractor shall, as a penalty, forfeit to the state or City not more than $200 for each calendar day or portion thereof, for each worker paid less than the prevailing rate as determined by the Director of Industrial Relations for the work or craft in which such worker is employed for under the Contract by the Contractor or by any Subcontractor under the Contractor.

The amount of the penalty shall be determined by the Labor Commissioner based on consideration of both of the following: (a) whether the failure to pay the correct rate of per diem wages was a good-faith mistake and, if so, whether the error was promptly and voluntarily corrected when brought to the attention of the Contractor or Subcontractor; and (b) whether the Contractor or Subcontractor has a prior record of failing to meet its prevailing wage obligations.

The penalty may not be less than forty dollars ($40) for each calendar day, or portion thereof, for each worker paid less than the prevailing wage rate, unless the failure of the Contractor or Subcontractor to pay the correct rate of per diem wages was a good faith mistake and, if so, the error was promptly and voluntarily corrected when brought to the attention of the Contractor or Subcontractor.

The penalty may not be less than eighty dollars ($80) for each calendar day, or portion thereof, for each worker paid less than the prevailing wage rate, if the Contractor or Subcontractor has been assessed penalties within the previous three (3) years for failing to meet its prevailing wage obligations on a separate contract, unless those penalties were subsequently withdrawn or overturned.

The penalty may not be less than one hundred twenty dollars ($120) for each calendar day, or portion thereof, for each worker paid less than the prevailing wage rate, if the Labor Commissioner determines that the violation was willful, as defined in subdivision (c) of Section 1777.1 of the Labor Code.

If the amount due under this section is collected from the Contractor or Subcontractor, any outstanding wage claim under Chapter 1 (commencing with Section 1720) of Part 7 of Division 2 of the Labor Code against the Contractor or Subcontractor shall be satisfied before applying that amount to the penalty imposed on that Contractor or Subcontractor pursuant to this section.

The determination of the Labor Commissioner as to the amount of the penalty shall be reviewable only for an abuse of discretion.

In addition to said penalty, the difference between such stipulated prevailing wage rates and the amount paid to each worker for each calendar day or portion thereof for which each worker was paid less than the stipulated prevailing wage shall be paid to each worker by the Contractor or Subcontractor.

If a worker employed by a Subcontractor on a public works project is not paid the general prevailing per diem wages by the Subcontractor, the Contractor is not liable for any penalties described above unless the Contractor had knowledge of that failure of the Subcontractor to pay

the specified prevailing rate of wages to those workers or unless the Contractor fails to comply with all of the following requirements:

1. The contract executed between the Contractor and the Subcontractor for the performance of work on the public works project shall include a copy of the provisions of Sections 1771, 1776, 177.5, 1813, and 1815 of the Labor Code.
2. The Contractor shall monitor the payment of the specified general prevailing rate of per diem wages by the Subcontractor to the employees, by periodic review of the certified payroll records of the Subcontractor.
3. Upon become aware of the Subcontractor's failure to pay its workers the specified prevailing rate of wages, the Contractor shall diligently take corrective action to halt or rectify the failure, including, but not limited to, retaining sufficient funds due the Subcontractor for work performed on the public works project.
4. Prior to making final payment to the Subcontractor for work performed on the public works project, the Contractor shall obtain an affidavit signed under penalty of perjury from the Subcontractor that the Subcontractor has paid the specified general prevailing rate of per diem wages to its employees on the public works project and any amount due pursuant to 1813 of the Labor Code.

Pursuant to Section 1775 of the Labor Code, the Division of Labor Standards Enforcement shall notify the Contractor on a public works project within fifteen (15) Days of the receipt by the Division of Labor Standards Enforcement of a complaint of the failure of a Subcontractor on that public works project to pay workers the general prevailing rate per diem wages.

Pursuant to the provisions of California Labor Code Section 1773, the City has obtained

the general prevailing rate of wages applicable to the categories of workers the City anticipates will be utilized for this project for straight time, overtime, Saturday, Sunday, and holiday Work. The holiday wage rate listed shall be applicable to all holidays recognized in the collective bargaining agreement of the particular craft, classification or type of worker concerned or, if no collective bargaining applies, those holidays identified in Government Code Section 6700. These wage rates may be obtained from the State Department of Industrial Relations and/or the following website address: http://www.dir.ca.gov/dlsr/DPreWageDetermination.htm, which is incorporated herein as a part of this Contract.

Pursuant to Labor Code Section 1773.2, the general prevailing wage rates set forth above, which forms a part of this Contract, shall be posted by the Contractor at a prominent place at the site of the Work.

Pursuant to Labor Code Section 1773.6 and California Code of Regulations Section 16204, Title 8, changes in general prevailing wage determinations shall apply to the project only if issued by the Director of Industrial Relations prior to the City's bid issuance date.

The City will not recognize any claim for additional compensation because of the payment by the Contractor of any wage rate in excess of the prevailing wage rate set forth in the Contract. The possibility of wage increases is one of the elements to be considered by the Contractor in determining its Bid, and will not under any circumstances be considered as the basis of a claim against the City or Contract.

When both California and Federal prevailing wage rates apply, the Contractor and any Subcontractors shall pay their workers the higher of the two rates. The Contractor and any Subcontractors shall insert this clause in any lower tier contract.

5-1.05 **REGISTRATION REQUIRED AS QUALIFICATION TO BID.**

Pursuant to Labor Code Section 1771.1(b), notice is hereby given that a Contractor or Subcontractor shall not be qualified to bid on, be listed in a bid proposal, subject to the requirements of Section 4104 of the Public Contract Code, or engage in the performance of any contractor for public work, as defined in Labor Code Sections 1720, et seq., unless currently registered and qualified to perform public work pursuant to Labor Code Section 1725.5. It is not a violation of Labor Code Section 1771.1 for an unregistered contractor to submit a bid that is authorized by Section 7029.1 of the Business and Professions Code or by Section 10164 or 20103.5 of the Public Contract Code, provided the contractor is registered to perform public work pursuant to Section 1725.5.

5-1.06 **PAYROLL RECORDS.** The Contractor's attention is directed to the following provisions of Labor Code Section 1776. The Contractor shall be responsible for the compliance with these provisions by its Subcontractors.

A. The Contractor and each Subcontractor shall keep accurate and current payroll records, showing the name, address, social security number, work classification, straight time and overtime hours worked each day and week, and the actual per diem wages paid to each journeyman, apprentice, worker, or other employee employed by it in connection with the public work. Each payroll record shall contain or be verified by a written declaration that is made under penalty of perjury, stating both of the following:

1. The information contained in the payroll record is true and correct.

2. The employer has complied with the requirements of Section 1771, 1811, and 1815 for any work performed by his or her employees on the public works project.

B. The payroll records enumerated under subdivision (A) shall be available for inspection at all reasonable hours at the principal office of the Contractor on the following

basis:

1. A certified copy of an employee's payroll record shall be made available for inspection or furnished to such employee or his or her authorized representative on request.

2. A certified copy of all payroll records enumerated in subdivision (A) shall be made available for inspection or furnished upon request to a representative of the City, the Division of Labor Standards Enforcement, and the Division of Apprenticeship Standards of the Department of Industrial Relations. The City reserves the right to withhold any progress payments to the Contractor in the event of noncompliance with the subsection.

3. A certified copy of all payroll records enumerated in subdivision (A) shall be made available upon request by the public for inspection or for copies thereof. However, a request by the public shall be made through either the City, the Division of Apprenticeship Standards, or the Division of Labor Standards Enforcement. The public shall not be given access to such records at the principal office of the Contractor.

C. The certified payroll records shall be on forms provided by the Division of Labor Standards Enforcement or shall contain the same information as the forms provided by the Division.

D. Each Contractor shall file a certified copy of the records enumerated in subdivision (A) with the entity that requested the records within ten (10) Days after receipt of a written request.

E. Any copy of the records made available for inspection as copies and furnished upon request to the public or any public agency by the City, the Division of Apprenticeship Standards or the Division of Labor Standards Enforcement shall be marked or

obliterated to prevent disclosure of an individual's name, address and social security number. The name and address of the Contractor awarded the Contract or Subcontractor performing the Contract shall not be marked or obliterated. Any copy of records made available for inspection by, or furnished to, a joint labor-management committee established pursuant to the federal Labor Management Cooperation Act of 1978 (Section 175a of Title 29 of the United States Code) shall be marked or obliterated only to prevent the disclosure of an individual's name and social security number. A joint labor-management committee may maintain an action in a court of competent jurisdiction against an employer who fails to comply with Section 1774. The court may award restitution to an employee for unpaid wages and may award the joint labor-management committee reasonable attorneys' fees and costs incurred in maintaining the action. An action under this subdivision may not be based on the employer's misclassification of the craft of a worker on its certified payroll records. Nothing in this subdivision limits any other available remedies for a violation of this section.

F. The Contractor shall inform the City of the location of the records enumerated under subdivision (A), including the street address, city and county, and shall, within five (5) business days, provide a notice of a change of location and address.

G. The Contractor shall have ten (10) Days in which to comply subsequent to receipt of written notice requesting the records enumerated in subdivision (A). In the event that the Contractor or Subcontractor fails to comply within the ten (10) Day period, the Contractor shall, as a penalty to the State or City, forfeit twenty-five ($25) Dollars for each calendar day, or portion thereof, for each worker, until strict compliance is effectuated. Upon the request of the Division of Apprenticeship Standards or the Division of Labor Standards Enforcement, these penalties shall be withheld from any progress payment or final payment then due. A contractor

is not subject to a penalty assessment pursuant to this section due to the failure of a Subcontractor to comply with this section.

5-1.07 **SAFETY REQUIREMENTS.** It is the intent of the parties that the City is not an exposing, creating, controlling, or correcting employer under California Labor Code Section 6400. In accordance with generally accepted construction practices and State law, the Contractor shall have the authority and be solely and completely responsible for conditions on the Work Site, including safety of all persons and property during performance of the Work. Moreover, the Contractor shall be the controlling employer and has the authority and responsibility to enforce Work Site safety. The Contractor shall be responsible for conducting daily safety inspections and assuring all hazards and violations are abated. The Contractor is responsible for assuring that all Subcontractors adhere to the minimum Cal/OSHA safety requirements and that each Subcontractor has an effective Cal/OSHA IIPP (Illness and Injury Prevention Program) in place that specifically addresses all potential exposures, such as, but not limited to, fall protection, confined space, and trenching/shoring. These requirements shall apply continuously and not be limited to normal working hours. The Contractor shall be responsible for any delay costs or damages in the event the progress of Work is slowed or stopped due to a safety violation.

The Contractor shall designate a safety officer and have in place a health and safety plan in accordance with the laws of State of California and conduct safety meetings and document them in accordance with the law. The Contractor shall have the safety record available for inspection during working hours and shall submit job site safety meeting reports with each Application for Payment.

Prior to Contractor commencing construction project work on City property, Contractor

shall make available copies of its Health and Safety Plan (HASP) that meets or exceeds applicable Cal/OSHA regulations. The Contractor's HASP shall also meet or exceed the requirements of any applicable City-wide or departmental specific Injury and Illness Prevention Programs (IIPP) and other HASP programs, procedures, and plans. Potentially applicable HASP programs, procedures, and plans include, but are not limited to, the following:

1. Bloodborne Pathogens Exposure Control Plan;
2. Confined Space Entry Procedure;
3. Electrical Safety Program (Lockout/Tagout);
4. Emergency Action Plans (Site Specific);
5. Fire Prevention Plans (Site Specific);
6. Hazardous Waste Operations Emergency Response Plan (or Equivalent);
7. Hazard Communication Program (SDS's and Right-to-Know training);
8. Heat Illness & Prevention Plan;
9. Hearing Conservation Program;
10. Hot Work/Welding Procedure;
11. Job Hazard Analyses/Standard Operating Procedures;
12. Traffic Control & Flagging;
13. Excavation/Dig Safe Procedure;
14. Fall Protection Plan;
15. Personal Protective Equipment Plan;
16. Respirable Crystalline Silica Exposure Control Plan;
17. Respirator Program;
18. Soils Management Plan (for contaminated soils); and

19. Transite (Asbestos) Pipe Work Procedure.

Additionally, Contractor shall be responsible for complying with all City-wide and departmental specific safety requirements as identified in the Supplemental Conditions or presented at a pre-construction meeting.

Contractor shall inform City in advance of the quantity of chemical(s) to be used for the project and the total quantity of chemical(s) that will be brought onto City property. In addition, Contractor shall provide City with one copy of the Safety Data Sheet (SDS) for each chemical expected to be used to complete the project and for each chemical brought to the Work Site, regardless of whether such chemicals are ultimately used for the project.

The services of the Director in conducting construction review of the Contractor's performance is not intended to include review of the adequacy of the Contractor's Work methods, equipment, bracing or scaffolding, or safety measures, in, on, or near the construction site. If a City employee observes a safety violation, the City employee will report the violation to the Contractor who is then responsible for assuring the violation is abated.

The Contractor is hereby informed that Work on this project could be hazardous. The Contractor shall carefully instruct all personnel working in potentially hazardous Work areas as to potential dangers and shall provide such necessary safety equipment and instructions as are necessary to prevent injury to personnel and damage to property. Special care shall be exercised relative to Work underground.

All Work and materials shall be in strict accordance with all applicable State, City, County, and Federal Rules, Regulations, and Codes, and attention is drawn to the requirements of Cal/OSHA. The Contractor shall be solely responsible for compliance with all City, County and State blasting requirements and for any damages caused by its operations.

To ensure compliance with California Labor Code Section 6705, the Contractor shall submit to the City, at least five (5) Days in advance of excavation of any trench five feet (5') or more in depth, Working Drawings to the Director showing the design of shoring, bracing, sloping and other provisions to be made for worker protection from the hazard of caving ground during the excavation of such trench or trenches. If such Working Drawings vary from the shoring system standards established by the Cal/OSHA Construction Safety Orders of the Division of Industrial Safety, the plan shall be prepared and signed by a registered civil or structural engineer in the State of California. This in no way relieves the Contractor from the requirement of maintaining safety in all operations performed by the Contractor or the Contractor's Subcontractors and nothing in this section shall be deemed to allow the use of a shoring, sloping or protective system less effective than that required by the Cal/OSHA Construction Safety Orders of the Division of Industrial Safety Contractor's Working Drawings shall be subject to approval insofar as the details affect the character of the finished Work and for compliance with design requirements applicable to the construction when specified or called for, but details of the design will be left to Contractor who shall be responsible for the successful construction of the Work. The City shall approve Working Drawings before any Work involving such drawings is performed. Approval and/or acceptance by the City or its designated agent only constitutes acknowledgment of the submission and does not constitute review or approval of the designs, design assumptions or criteria, completeness of submissions, applicability to areas of intended use, nor implementation of the plans, which are solely the responsibility of the Contractor and its registered engineer.

The Contractor shall perform its Work as not to expose personnel to, or to discharge into the atmosphere from any source whatever, smoke, dust, asbestos, toxic chemicals or other air

contaminants in violation of the laws, rules, and regulations of the governmental entities having jurisdiction and shall bear full and exclusive responsibility for any release of hazardous or non-hazardous chemicals or substances during the course of the Work. The Contractor shall immediately report any such release to the City. The Contractor shall be solely responsible for all claims and expenses associated with the response to, removal and remediation of the release, including, without limitation, payment of any fines or penalties levied against the City by any agency as a result of such release and shall defend, indemnify, and save and hold harmless the City, its officers, agents, employees, and volunteers from any claims arising from such release. For purposes of this section only, the term "claims" shall include:

1. All notices, orders, directives, administrative or judicial proceedings, fines, penalties, fees, or charges imposed by any governmental agency with jurisdiction; and

2. Any claim, cause of action, or administrative or judicial proceeding brought against the City, its officers, agents, employees, and volunteers for any loss, cost (including reasonable attorneys' fees), damage or liability, sustained or suffered by any person or entity, including the City.

If the performance of the Work creates any hazardous wastes, those wastes shall be properly disposed of according to federal, state, and local laws, at the expense of the Contractor. The Contractor shall dispose of the wastes under its own EPA Generator Number. In no event shall the City be identified as the generator. The Contractor shall notify the City of any such hazardous wastes and the City reserves the right to a copy of the results of any tests conducted on the wastes, and, at its cost, to perform additional tests or examine those wastes, prior to disposition. The Contractor shall defend, indemnify, and save and hold harmless the City, its

officers, agents, employees, and volunteers from any claims arising from the disposal of the hazardous wastes, regardless of the absence of negligence or other malfeasance by the Contractor. Disposal of all Hazardous Materials must be done in accordance with all laws and regulations. Copies of required regulatory documentation including copies of final manifests shall be supplied to the City.

Contractors or Subcontractors removing one hundred or more square feet (100') of asbestos must be "Certified" in accordance with State law. All Work involving exposure to asbestos and all other hazardous materials shall be performed with protection of personnel in compliance with all applicable regulations and safety requirements including, but not limited to, California Code of Regulations Section 1529, Title 8.

Nothing in these General Conditions is to be construed to permit Work not conforming to governing codes. When Contract Documents differ from governing codes, the Contractor shall furnish and Install the higher standards called for without extra charge.

5-1.08 **SUBSURFACE EXCAVATIONS, NOTIFICATION.** The Contractor shall contact the regional notification center, "Underground Service Alert," and schedule its Work to allow ample time for the center to notify its members and, if necessary, for any member to field locate and mark its facilities. Without limiting the foregoing, the Contractor's attention is directed to Government Code Sections 4216 to 4216.9, and in particular Section 4216.2.

5-1.09 **PUBLIC SAFETY.** The Contractor shall assume all responsibility for public safety during the performance of its Work, and all costs arising therefrom shall be included in the Contract Price. Whenever the Contractor's operations create a condition hazardous to traffic or to the public, it shall furnish, erect and maintain, at its expense, such fences, barricades, lights, signs, and other devices and take such other protective measures as are

necessary to prevent accidents or damage or injury to the public. The Contractor shall establish the pedestrian detours with comparable lighting to the original pedestrian areas. The Contractor shall arrange for such flaggers as are necessary to give adequate warning to traffic or to the public of any dangerous conditions affecting traffic. For Work in a public right-of-way, the Contractor shall comply with the rules and regulations of the State, County, or local agency that owns the right-of-way.

The Contractor shall promptly and fully comply with and carry out, and shall without separate charge therefor to the City, all safety and first aid requirements prescribed by all applicable Federal, State, and local laws and regulations, rules, and orders. The Work shall be done in a safe manner; and the Contractor shall safeguard the safety and health of its employees, Subcontractors, and the people of local communities. The Contractor shall also be reasonable for ensuring that its Subcontractors comply with the provisions of this section.

Upon the failure of the Contractor to comply with any of the requirements of this section, the City shall have the authority, but not the duty, to stop the Work until such failure is remedied. The Contractor shall not be entitled to an adjustment of the Contract Time or an increase in the Contract Price due to any such suspensions.

When required by the Contract Documents, the Contractor shall construct, maintain, and remove detours for use of public traffic, without additional cost to the City, unless separate payment is specified in the Special Provisions.

The failure or refusal of the Contractor to construct and maintain detours at the proper time shall be sufficient cause for closing down the work until such detours are in satisfactory condition for use by public traffic.

Due care shall be exercised to avoid injury to existing improvements or facilities, utility

facilities, adjacent property and trees, shrubs, and other plants that are not to be removed.

Trees, shrubs and other plants that are not to be removed, and pole lines, fences, signs, survey markers and monuments, buildings and structures, conduits, pipe lines, sewer and waterlines, highway facilities, and any other improvements or facilities, under or above ground, that are within or adjacent to the work limit line shall be protected from injury or damage, and the Contractor shall provide and Install suitable safeguards to protect such objects from injury or damage. If such objects are injured or damaged by reason of the Contractor's operations, they shall be replaced or restored at the Contractor's expense. The facilities shall be replaced or restored to a condition as good as when the Contractor entered upon the Work Site, or as good as required by the Contract Documents if any such objects are part of the Work. The City may make or cause to be made such temporary repairs as are necessary to restore to service any damaged facility. The cost of such repairs shall be borne by the Contractor, and the costs may be deducted from any monies due or to become due to the Contractor under the Agreement.

The fact that any underground facilities is not shown on the Contract Drawings shall not relieve the Contractor of its responsibility pursuant to "Utility Facilities" in Section 2-1.12 elsewhere in the Contract Documents. It shall be the Contractor's responsibility, pursuant thereto, to ascertain the location of such underground improvements or facilities, which may be subject to damage by reason of its operations.

Full compensation for furnishing all labor, materials, tools, equipment and incidentals, and for doing all the Work involved in protecting or repairing property as specified in this section, shall be considered as included in the prices paid for the various Contract items of work and no additional compensation will be allowed therefor.

5-1.10 **EMERGENCIES.** In an Emergency affecting the safety of life, the

Work, or adjoining property, the Contractor, without special instructions or authorization from the City, shall act at its discretion to prevent such threatened loss or injury. In such an Emergency, the Contractor may perform such additional work as is reasonably required. Any compensation claimed by the Contractor on account of Work performed to an Emergency shall be determined in accordance with the provisions relating to Force Account payment contained elsewhere in the Contract Documents.

5-1.11 **APPRENTICES.** Attention is directed to Labor Code Sections 1777.5, 1777.6 and 1777.7 and Title 8, California Code of Regulations Section 200 et seq. In accordance with Section 1777.5, the Contractor shall secure the necessary certificates and shall contribute to the apprenticeship fund or funds, a provided therein. The Contractor shall require each Subcontractor who will perform work or labor or render service to the Contractor in or about the construction of the work to fully comply with Sections 1777.5 and 1777.6 of the Labor Code. To insure compliance and complete understanding of the law regarding apprentices, and specifically the required ratio thereunder, each Contractor or Subcontractor should, where some questions exist, contact the Division of Apprenticeship Standards, , or one of its branch offices prior to commencement of Work on the public works Contract. Responsibility for compliance with this section lies with the prime Contractor.

It is State and City policy to encourage the employment and training of apprentices on public works Contracts as may be permitted under local apprenticeship standards.

5-1.12 **FAIR LABOR STANDARDS ACT.** Attention is invited to the fact that the City has been advised by the Wage and Hour Division, U.S. Department of Labor, that Contractors engaged in construction Work are required to meet the provisions of the Fair Labor Standards Act of 1958 and as amended (52 Stat. 1060).

5-1.13 **WORKERS' COMPENSATION.** Pursuant to the requirements of Labor Code Section 1860, the Contractor will be required to secure the payment of workers' compensation to its employees in accordance with the provisions of Labor Code Section 3700.

Prior to the commencement of Work, the Contractor shall sign and file with the Director a certification in the following form:

> "I am aware of the provisions of Labor Code Section 3700 which require every employer to be insured against liability for workers' compensation or to undertake self-insurance in accordance with the provisions of that code, and I will comply with such provisions before commencing the performance of the Work of this Contract."

5-1.14 **AIR POLLUTION CONTROL AND ASBESTOS.** The Contractor shall comply with all air pollution control rules, regulations, ordinances and statutes which apply to any Work performed pursuant to the Contract, including any air pollution control rules, regulations, ordinances and statues, specified in Government Code Section 11017.

In the absence of any applicable air pollution control rules, regulations, ordinances or statutes governing solvents, all solvents, including but not limited to the solvent portions of paints, thinners, curing compounds, and liquid asphalt used on the project shall comply with the applicable material requirements of the applicable Air Quality Management District. All containers of solvent, paint, thinner, curing compound, or liquid asphalt shall be labeled to indicate that the contents fully comply with said requirements.

Unless otherwise provided in the Supplemental Conditions, material to be disposed of shall not be burned, either inside or outside the Premises.

The Contractor shall also comply with all rules, regulations, statutes and ordinances

regarding asbestos removal and disposal, including but not limited to, 42 U.S.C. Sections 7401, 7412 and 7601, 40 C.F.R. Part 61, Subpart M, and California Code of Regulations Section 1529, Title 8.

If the Contractor discovers that a building to be demolished or renovated contains asbestos containing material, the Contractor shall immediately cease Work and notify the City.

5-1.15 **USE OF PESTICIDES.** The Contractor shall comply with all local, state and federal rules and regulations of the Department of Food and Agriculture, the Department of Health, the Department of Industrial Relations and all other agencies which govern the use of pesticides required in the performance of the Work.

Pesticides shall include but shall not be limited to herbicides, insecticides, fungicides, rodenticides, germicides, nematocides, bactericides, inhibitors, fumigants, defoliants, desiccants, soil sterilants, and repellents.

Any substance or mixture of substances intended for preventing, repelling, mitigating, or destroying weed, insects, diseases, rodents, or nematodes and any substance or mixture of substances intended for use as a plant regulator, defoliant or desiccant shall be considered as pesticide.

5-1.16 **SOUND AND LIGHT CONTROL REQUIREMENTS.** The Contractor shall comply with all local sound control, light control, and noise level rules, regulations and ordinances which apply to any Work performed pursuant to the Contract. Work shall not begin before 7 a.m. nor occur after 7 p.m., unless otherwise permitted by the City.

Each internal combustion engine, used for any purpose on the Work or related to the Work, shall be equipped with a muffler, in good working order, of a type recommended by the manufacturer. No internal combustion engine shall be operated on the project without said

muffler.

5-1.17 **WEIGHT LIMITATIONS.** Unless expressly permitted elsewhere in the Contract Documents, the Contractor shall not operate construction equipment or vehicles of any kind which, laden or unladen, exceed the maximum weight limits set forth in Division 15 of the Vehicle Code over completed or existing base, surfacing, pavement or structures.

5-1.18 **ENVIRONMENTAL CLEARANCES; MITIGATION MONITORING PROGRAMS; AND REGULATORY AGENCY PERMIT REQUIREMENTS.** The Department will obtain all environmental clearances and other authorizations necessary for this project as set forth in the Contract Documents. The Contractor shall comply with the provisions, including giving notices during construction when required, of said authorizations. In the event the obtaining of said authorizations delays completion of all or any portion of the Work, an extension of time determined pursuant to the provisions in Section 6-1.08, "Liquidated Damages," of these General Conditions will be granted.

Contractor shall comply with: (1) all mitigation identified in the mitigation monitoring program (attached to and adopted as a component of the mitigated negative declaration or Environmental Impact Report) to mitigate impacts to protected natural resources; and (2) all related permit requirements issued by the regulatory agencies authorizing the project. Contractor shall defend, indemnify, and save and hold harmless the City, its officers, agents, employees, and volunteers from any fines, claims, suits, actions or regulatory sanctions of every name, kind and description brought forth, or on account of, damage to protected natural resources from or arising out of Contractor's negligence or willful misconduct in the performance of this Agreement.

5-1.19 **PERMITS AND LICENSES.** The Contractor acknowledges and agrees that, prior to the submission of its bid for the Work, it fully familiarized itself with the

requirements of all applicable federal, state, county and municipal laws, codes, rules, and regulations, as well as the conditions of any required licenses and permits.

The Contractor shall procure all permits and licenses, including any applicable building permits (except those procured or to be procured by the City which are listed elsewhere in the Contract Documents), in coordination with the Director, pay all charges and fees, and give all notices necessary and incident to the due and lawful prosecution of the Work. Contractor shall be responsible for applying, paying all fees, and coordination for obtaining all permits for completion of the Work. All permits and licenses shall be obtained in sufficient time to prevent delays to the Work. Contractor will apply to the City for reimbursement for such permits costs. Accordingly, Contractor should not include the anticipated costs for permits in its bid, as the necessary permit costs will be reimbursed by the City.

The California Environmental Quality Act (Public Resources Code, Section 21000 to 21177) may be applicable to permits, licenses and other authorizations which the Contractor must obtain from State or local agencies in connection with performing the Work. The Contractor shall comply with the provisions of that Act in obtaining such permits, licenses and other authorizations, and all permits, licenses and other authorizations shall be obtained in sufficient time to prevent delays to the Work.

The Contractor shall maintain the applicable Contractor's license as identified in the Notice to Contractors and City business license for the duration of the Work.

5-1.20 **WATER POLLUTION.** The Contractor shall comply with all water pollution control rules, regulations, ordinances and statutes which apply to any Work performed pursuant to the Contract, including any water pollution control rules, regulations, and statutes, specified by the most current State of California NPDES General Permit for Stormwater

Discharges Associated with Construction Activity.

The Contractor shall take all necessary precaution to protect streams, vernal pools, ponds, reservoirs, and lakes from pollution with fuels, oils, bitumen, calcium chloride, and other harmful materials as consistent with the law. Also, the Contractor shall conduct and schedule operations so as to avoid discharging pollutants, such as but not limited to: sediment and silt to the storm drain system. The storm drain system consists of all facilities that are designed to convey stormwater to the Waters of the State as defined in the California Water Code. The storm drain system includes, but is not limited to, all streets, gutters, drain inlets, roadside ditches, streams, vernal pools, ponds, and lakes. Care shall be exercised to preserve roadside vegetation beyond the limits of construction.

5-1.21 **PROTECTION AND USE OF PROPERTY.** The Contractor shall be responsible for and provide and maintain all proper temporary walkways, covered walkways, barriers, roads, guards, railings, lights, warning signs, and take precaution at all times to avoid injury or damage to any person or any property, and upon completion of the Work, or at other times as directed, restore Premises and adjacent property to a proper condition. In the event of such injury or damage, Contractor shall report such injury and damage to City within forty-eight (48) hours of occurrence.

The Contractor shall protect adjoining property and nearby buildings, including City buildings, City roads, and public streets or roads, from dust, dirt, debris, or the nuisance arising out of the Contractor's operations or storage practices, and, if ordered by the Director, the Contractor shall provide and Install suitable safeguards, approved by the Director, to protect such objects from damage. If such objects are damaged by reason of the Contractor's operations, they shall be replaced or restored at the Contractor's expense.

If the Contractor damages any buildings, roads, utilities, or other property which belong to the City, or any Department or agency thereof, then the Director, at his or her option, may retain from the money due under the Contract an amount sufficient to insure repair of the damage.

The Director may make or cause to be made such temporary repairs as are necessary to restore to service any such damaged facility. The cost of such repairs shall be borne by the Contractor and may be deducted from any moneys due or to become due the Contractor under the Contract.

5-1.22 **RESPONSIBILITY FOR DAMAGE AND INDEMNIFICATION.**

The City of Roseville, its officers, agents, employees, and volunteers, including but not limited to the Director and his or her designee, shall not be answerable or accountable in any manner: for any loss or damage that may happen to the Work or any part thereof; for any loss or damage to any of the materials or other things used or employed in performing the Work; for injury to or death of any person, either workers or the public; or for damage to property from any cause which might have been prevented by the Contractor, its workers, or anyone employed by the Contractor or the Contractor's Subcontractors.

The Contractor shall be responsible for any liability imposed by law and for injuries to, or death of, any person including, but not limited to, workers and the public, or damage to property resulting from defects or obstructions, or from any cause whatsoever during the progress of the Work or at any time before its completion and final Acceptance.

To the fullest extent allowed by law, the Contractor shall defend (through counsel acceptable to the City), indemnify, and save and hold harmless the City, and its respective officers, agents, Subcontractors, employees, and volunteers, and the successors and assigns of

any of them, (hereinafter referred to as "Indemnitees") from and against all claims, demands, liability, suits, actions, costs or expenses for any and all loss or damage, including but not limited to, personal injury, property damage, or economic loss, arising out of or resulting from allegations of (1) Contractor's use of the City's property or any activities or Work performed hereunder by the Contractor; (2) the Contractor's performance of the Work under the Agreement; or (3) the Contractor's breach of any provision of the Agreement. The duty of the Contractor to indemnify and save harmless includes the duties to defend as set forth in Civil Code Section 2778. The only exception to these provisions is that the Contractor's obligations under this section will not apply to the extent that the claims, demands, liability, suits, actions, costs or expenses are caused by Indemnitees' active negligence, willful misconduct, criminal acts, or for defects in design furnished by the Indemnitees, misconduct, criminal acts, or for defects in design furnished by the Indemnitees.

The Contractor waives any and all rights to any type of express or implied indemnity against the City, its officers, agents, employees, or volunteers.

The Contractor's responsibility for such defense and indemnity obligations shall survive the termination or completion of this Contract for the full period of time allowed by law. The defense and indemnity obligations of this Contract are undertaken in addition to, and shall not in any way be limited by, the insurance obligations contained in this Contract. The parties intend that the defense and indemnity obligations in this Contract shall be broadly construed.

Any person, firm or corporation that Contractor authorizes to Work on the City's property including Subcontractors, shall be deemed to be an agent of the Contractor for purposes herein, shall be subject to all the applicable terms herein, and shall be within the scope of the Contractor's indemnity obligation described herein.

In addition to any remedy authorized by law, so much of the money due the Contractor under and by virtue of the Contract as shall be considered necessary by the Department may be retained by the City until disposition has been made of such suits or claims for damages.

The retention of money due the Contractor shall be subject to the following:

A. The City will give the Contractor thirty (30) Days' notice of its intention to retain funds from any partial payment which may become due to the Contractor prior to Acceptance of the Contract. Retention of funds from any payment made after Acceptance of the Contract may be made without such prior notice to the Contractor.

B. No retention of additional amounts out of partial payments will be made if the amount to be retained does not exceed the amount being withheld from partial payments pursuant to Section 7-1.07, "Progress Payments," of these General Conditions.

C. If the City has retained funds and it is subsequently determined that the City is not entitled to be indemnified and saved harmless by the Contractor in connection with matter for which such retention was made, the Department shall be liable for interest on the amount retained at the legal rate of interest for the period of such retention.

5-1.23 **INSURANCE COVERAGE.**

A. Evidence of Maintenance Required. The Contractor shall, at its expense, procure and at all times maintain in full force and effect at a minimum the insurance required by this section on all of its operations; and the Contractor shall not allow any Subcontractor to commence work until similar insurance required of the Subcontractor has been obtained and filed. An original Certificate of Insurance, and copies of all required endorsements, all in a form approved by the Risk Manager, evidencing all required coverage or policies shall be filed after the award of the bid and prior to approval of the Contract by the City Council. Contractor shall

provide ten (10) days prior written notice to the City of any reduction of coverage limits or cancellation of the coverage or policies shall be given to the City of Roseville as Certificate holder.

B. Qualifying Insurers. With the exception of the State Compensation Insurance Fund, all required insurance policies shall be issued by companies acceptable to the City and licensed to do business in the State of California and who hold a current policy holders alphabetic and financial size category rating of not less than AVII according to the most recent issue of Best's Insurance Reports.

C. Insurance Required.

1. Commercial General Liability (CGL): Insurance Services Office Form CG 00 01 covering CGL on an "occurrence" basis, including products and completed operations with limits of no less than Two Million Dollars ($2,000,000) per occurrence for bodily injury, personal injury and property damage for projects under One Million Dollars ($1,000,000) and limits of no less than Five Million Dollars ($5,000,000) per occurrence for bodily injury, personal injury and property damage for projects over One Million Dollars ($1,000,000). If a general aggregate limit applies, either the aggregate limit shall apply separately to this project or the general aggregate limit shall be twice the required occurrence limit.

The Commercial General Liability insurance shall include the following, copies of which shall be provided:

a. Inclusion of the City of Roseville, and its officers, agents, employees, and volunteers, as additional insureds (except for workers' compensation) as respects services or operations under the Contract. The additional insured endorsement for the general liability policy shall be at least as broad as the ISO CG 2010 10 01 combined with ISO CGL

Endorsement CG 2037 10 01. Any other endorsement must be approved in writing by the City. Endorsements must include coverage for on-going and completed operations, which coverage shall be maintained for four (4) years following completion of the Project. Endorsements shall cover the City of Roseville, its officers, agents, employees, and volunteers.

b. The insurance shall provide coverage for claims by one insured against another insured and the policies shall not contain any cross-suits exclusions, cross-liability exclusions, or insured versus insured exclusions. The policies shall not contain any classification exclusions purporting to deny coverage for any work to be performed by Contractor or any of its Subcontractors.

c. Stipulation that the insurance is primary and noncontributory, as evidenced by a separate endorsement (CG 20 01 04 13 or an equivalent) or section of the policy, and that neither the City nor its insurers will be called upon to contribute to a loss.

d. Such insurance shall specifically cover the contractual liability of the Contractor.

e. Any available insurance proceeds in excess of the specified minimum insurance coverage requirements and limits shall be available to the additional insureds. Furthermore, the requirements for coverage and limits shall be: (1) the minimum coverage and limits specified in this Agreement; or (2) the full coverage and maximum limits of any insurance proceeds available to the named insureds, whichever is greater.

f. Waiver of subrogation endorsement.

g. The Contractor shall furnish a certificate for the period covered.

2. Automobile Liability: Insurance Services Office Form Number CA 0001 covering Code 1 (any auto), or if Contractor has no owned autos, Code 8 (hired) and Code 9

(non-owned), with limits of no less than One Million Dollars ($1,000,000) per accident for bodily injury and property damage.

3. Workers' Compensation: In accordance with the provisions of the California Labor Code, Contractor is required to be insured against liability for Workers' Compensation or to undertake self-insurance. Statutory Workers' Compensation and Employers' Liability of at least One Million Dollars ($1,000,000) shall cover all Contractors staff while performing any work incidental to the performance or this Agreement.

4. Professional Liability: Professional Liability (Errors and Omission) Insurance appropriate to Contractor's profession, with a limit of liability not less than One Million Dollars ($1,000,000) per occurrence or claim and Two Million Dollars ($2,000,000) aggregate to cover all design and engineering services rendered by Contractor pursuant to the Agreement. Coverage must commence from the first day that Contractor or any of its Subcontractors provided any design or engineering services in connection with the Project.

5. Builder's Risk/Course of Construction Insurance (If Required by Risk Management): The Contractor shall be responsible for all loss, damage or destruction whatsoever to the work called for by this Contract until the approval of a Notice of Completion or acceptance of the Work if no Notice of Completion is to be recorded.

The Contractor shall secure "All Risk" type of builder's Risk Insurance of the type covering one hundred percent (100%) of the value of the work performed under this Contract (the value is presumed to be the Contract amount unless otherwise stated in Supplemental Conditions) and all materials, equipment, or other items to be incorporated therein while the same are located at the construction site, a bonded warehouse, or its place of manufacture. At any time, the policy shall cover the value of the work completed. The policy shall cover hazards

including the losses due to fire, explosion, hail, rain, lightning, flood (separate insurance as needed), vandalism, malicious mischief, wind, collapse, aircraft, and smoke.

The policies providing such insurance shall name the City as a loss payee as its respective interests may appear, and certified copies of such policies shall be filed with the City. The maximum deductible allowable under the Builder's All Risk policy shall be five percent (5%) of the Contract amount.

Builder's Risk Insurance is not required for coverage of losses in excess of five percent (5%) of the Contract amount for damages resulting from earthquake in excess of a magnitude of 3.5 on the Richter scale, or tidal waves. Coverage in the amount of five percent (5%) of the Contract amount for such losses is required.

6. Pollution Coverage: Contractor shall procure pollution liability coverage or other insurance covering claims for bodily injury or property damage arising out of the abatement, removal, storage, transportation, or other exposure to hazardous materials or pollutants, in limits not less than Two Million Dollars ($2,000,000). Contractor shall add the City and all parties required to be indemnified by Contractor as additional insured on all pollution liability policies.

7. Higher Coverage Limits: If Contractor maintains higher coverage limits than the amounts shown above, then the City requires and shall be entitled to coverage for the higher coverage limits maintained by Contractor. Any available insurance proceeds in excess of the specified minimum limits of insurance and coverage shall be available to the City.

8. Claims Made Coverage: Liability insurance coverage may not be written on a “claims made” or modified occurrence basis. The Certificate of Insurance must clearly provide that the coverage is on an “occurrence” basis.

5-1.24 **OTHER INSURANCE PROVISIONS.**

A. The requirements of the Standard Specifications as to types and limits of insurance coverage to be maintained by the Contractor, and any approval of insurance by the City, are not intended to, and shall not in any manner limit or qualify the liabilities and obligations otherwise assumed by the Contractor pursuant to the Contract, including, but not limited to, the provisions concerning indemnification, nor preclude the City from taking any other action available to it under any other provision of the Contract or law.

B. The City acknowledges that some insurance requirements contained in these Standard Specifications may be fulfilled by self-insurance on the part of the Contractor. However, this shall not in any way limit liabilities assumed by Contractor under the Contract. Any self-insurance must be approved in writing by the City, in its sole discretion and shall not reduce the limits of liability. Any deductibles or self-insured retentions ("SIR") must be declared on the certificate of insurance and approved by City in writing. Policies containing any SIR provision shall provide or be endorsed to provide that the SIR may be satisfied by either the named insured or City. City reserves the right to obtain a full certified copy of any insurance policy and endorsements. The failure to exercise this right shall not constitute a waiver of such right.

C. The Contractor agrees to include in its contracts with all subcontractors the same requirements and provisions of this Contract, including the indemnity and insurance requirements, to the extent they apply to the scope of the subcontractor's work. Furthermore, the Contractor shall require its subcontractors to agree to be bound to the Contractor and the City in the same manner and to the same extent as the Contractor is bound to the City under this Contract. Additionally, the Contractor shall obligate its subcontractors to comply with these

same provisions with respect to any tertiary subcontractor, regardless of tier. A copy of the City's indemnity and insurance provisions will be furnished to the subcontractor or tertiary subcontractor upon request. Alternatively, the Contractor may insure subcontractor(s) under its own policy.

D. The City, its officers, agents, employees, and volunteers are to be covered as insureds with respect to liability arising out of automobiles owned, leased, hired or borrowed by or on behalf of the Contractor; and with respect to liability arising out of work or operations performed by or on behalf of the Contractor including materials, parts or equipment furnished in connection with such work or operations. Coverage shall not extend to any indemnity coverage for the active negligence of the additional insured in any case where an agreement to indemnify the additional insured would be invalid under California Insurance Code Section 11580.04.

E. The limits of insurance required in this Contract may be satisfied by a combination of primary and excess insurance. Any excess insurance shall contain or be endorsed to contain a provision that such coverage shall also apply on a primary and noncontributory basis for the benefit of the City (if agreed to in a written contract) before the City's own insurance shall be called upon to protect it as a named insured.

F. The insurance procured by Contractor shall be subject to the approval of the City, but any acceptance of insurance certificates by the City shall in no way limit or relieve Contractor of its duties and responsibilities under the Agreement.

G. Contractor shall be responsible for all premiums, deductibles, and self-insured retention applicable to the insurance it is required to procure under the Contract. All deductibles or self-insured retentions over five hundred thousand dollars ($500,000) must be approved by the City, in writing. Contractor shall be responsible for all deductibles, self-insured

retention payments, and/or increased premiums incurred if the City's policies of insurance are forced to cover damages or respond to claims for which Contractor or its Subcontractors were obligated to provide insurance under the Contract.

H. Failure of the City to enforce in a timely manner any of the requirements of these insurance provisions shall not act as a waiver to enforcement of any of these provisions at a later date.

I. Contractor's indemnity obligations shall not be limited by these insurance provisions and shall survive the expiration of the Contract and the insurance provisions of the Contract shall likewise not be limited by the indemnity provisions of the Contract.

J. THE CITY RESERVES THE RIGHT TO WITHHOLD ANY PROGRESS PAYMENTS TO THE CONTRACTOR IN THE EVENT OF NONCOMPLIANCE WITH ANY INSURANCE REQUIREMENTS.

5-1.25 **THIRD PARTY BENEFICIARY.** No provisions in the Contract Documents shall in any way inure to the benefit any third party (including the public at large or any member thereof) so as to constitute such person a third party beneficiary of the Contract, or of any term or condition or other provision of the Contract or otherwise give rise to any cause of action in any person not a party to the Agreement, except as expressly provided elsewhere in the Contract Documents.

5-1.26 **COORDINATION AND ACCESS.** The Contractor acknowledges that the City may award, or has already awarded, other construction contracts for additional work or may perform additional work with its own forces and that such work may affect the Work under this Agreement. Additionally, the Contractor acknowledges that the State and other public and private agencies may be granted a right-of-entry by the City for the purpose of constructing

facilities within and adjacent to the Work Site. It is the obligation of the Contractor to coordinate its Work with the work of others working within or adjacent to the City's property.

During performance of its Work, the Contractor shall not have exclusive access to or use of the work areas. The City may also require that certain facilities and areas be used concurrently by the Contractor and by other contractors working in the area. When two (2) or more contractors are employed on related or adjacent City work, each shall conduct its operations in such a manner as not to cause any unnecessary delay or hindrance to the other. Each contractor shall be responsible to the other for all damage to any work, to persons or property caused to the other by its operations, and for loss caused the other due to any unnecessary delays or failure to finish the work within the time specified for completion.

If any party of the Contractor's Work depends on the work of any other contractor and/or the City for proper execution and/or results, the Contractor shall promptly notify the City of any discrepancies and/or defects in said other work that would render its work unsuitable for proper execution and/or results prior to proceeding with the Contractor's own Work. If it becomes necessary, the City will resolve coordination and access problems.

The Contractor and its representative in charge of the Work shall familiarize themselves with the City's property and Work Site, and adjacent surroundings in the vicinity of said Wok, and any private or public operations on adjoining properties.

5-1.27 **OCCUPANCY BY THE DEPARTMENT PRIOR TO ACCEPTANCE.** The City may at any time notify the Contractor in writing that it intends to take Beneficial Occupancy of any portion of the Work even though the Work may not be substantially complete. Unless the reason for the City's taking Beneficial Occupancy is that the Contractor has not completed the Work (or portions thereof) in accordance with the Contract

Time, the City's Beneficial Occupancy shall relieve the Contractor from its responsibility for maintenance, loss or damage to that portion of the Work for which the City has taken Beneficial Occupancy other than that resulting from the Contractor's act or omission, negligence, willful misconduct or breach of warranty.

Should the Work (or portion thereof) not be completed in accordance with the Construction Schedule within the Contract Time (as adjusted under the terms of the Contract Documents), the City shall have the right, but not the obligation, to take Beneficial Occupancy of the Work. In such event, the Contractor shall not be entitled to any additional compensation on account of said occupancy by the City, nor shall the Contractor be relieved of any of its responsibilities under the Contract Documents, including, without limitation, Contractor's obligation to complete the Work in accordance with the Construction Schedule.

Beneficial Occupancy shall not be deemed an Acceptance by the City either of the Work or of any portion thereof, nor will it relieve the Contractor of full responsibility for correcting defective Work or materials found at any time before the formal written Acceptance of the entire Contract by the Director or during the full warranty period after such Acceptance, as provided in Section 7-1.12, "Warranty," of these General Conditions.

The City's Beneficial Occupancy shall not relieve the Contractor of its responsibility to maintain all insurance and bonds required under the Contract Documents until the entire project is accepted by the City.

5-1.28 **RIGHT TO OPERATE UNSATISFACTORY FACILITIES AND EQUIPMENT.** If, after Installation, the operation or use of the facilities or equipment to be furnished under this Contract proves to be unsatisfactory to the Director, the City shall have the right to operate and use such facilities or equipment until they can, without damage to the City,

be taken out of service for correction or replacement. Such period of use of the defective facilities or equipment, pending correction or replacement, shall in no way decrease the warranty period required for the acceptable corrected or replaced facilities or equipment.

5-1.29 **CONTRACTOR'S RESPONSIBILITY FOR THE WORK.** Except as otherwise provided herein, the Contractor shall have the charge and care of the Work and shall bear the risk of injury or damage to any part of the Work by the action of the elements or from any other cause whether arising from the execution or from the nonexecution of the Work until the Acceptance of the Contract by the Director. The Contractor shall rebuild, repair, restore, and make good all injuries or damages to any portion of the Work occasioned by any cause before its completion and Acceptance, and shall bear the expense thereof. In case of suspension of Work from any cause whatever, the Contractor shall be responsible for the Work and it shall also be responsible for all materials, and shall properly store them if necessary, and shall provide suitable drainage and erect temporary structures where necessary.

The Contractor will be relieved of responsibility for any injury or damage to the Work caused by the following:

A. An earthquake in excess of a magnitude of 3.5 on the Richter Scale or a tidal wave, when the effect of such has been proclaimed a disaster or state of emergency by the Governor of the State of California or by the President of the United States, or was of such magnitude at the site of the Work as to have been sufficient to have caused a proclamation of disaster or state of emergency, had it occurred in a populated area.

B. Occupancy and use by the Department or the public prior to the completion of the entire project.

C. Acts of the Federal Government or the public enemy.

5-1.30 **RESPONSIBILITY FOR UTILITIES.** The Contractor shall be responsible at its own cost for any and all Work, expense or special precautions caused or required by the existence or proximity of utilities encountered in performing the Work, including without limitation, repair of any or all damage and all hand or exploratory excavation required. The Contractor is cautioned that such utilities may include communication cables or electrical cables which may be high voltage, and when working or excavating in the vicinity of such cables, or the ducts enclosing such cables, the Contractor shall undertake at its own cost any special precautions required. Suitable warning signs, barricades, and safety devices shall be erected as necessary or required.

However, if during the course of the Work the Contractor encounters utility Installations which are not shown or indicated in the Contract Documents or which are found in a location substantially different from that shown, and such utilities are not reasonably apparent from visual examination, then the Contractor shall promptly notify the Director in writing. Where necessary for the Work of the Contract, the Director shall issue a written order to the Contractor to make such adjustments, rearrangement, repair, removal, alteration, or special handling of such utility, including repair of the damaged utility. The Contractor shall perform the Work described in such written order, and compensation therefor will be made in accordance with Section 3 of these General Conditions relating to changes in the Work. Except for the items of cost specified in said Section 3, the Contractor shall receive no compensation for any other cost, damage, delay, interference, or hindrance to him or her due to the presence of such utility. If the Contractor fails to give the notice specified above and thereafter acts without instructions for the Director, then the Contractor shall be liable for any or subsequent to discovery thereof, and the Contractor shall repair and make good such damage at its own cost.

The precise location of underground facilities can only be determined by careful probing or hand digging in compliance with Article 6 of the Cal/OSHA Construction Safety Orders which states in part:

> "Prior to opening an excavation, effort shall be made to determine whether underground installations, i.e., sewer, water, fuel, electric lines, etc., will be encountered, and if so, where such underground installations are located. When the excavation approaches the approximate location of such an installation, the exact location shall be determined by careful probing or hand digging, and, when it is uncovered, adequate protection shall be provided for the existing installation."

The location of known existing utilities and pipelines are shown on the Contract Drawings in their approximate locations. Some of the locations include multiple conduits. The Contractor shall exercise care in avoiding damage to those facilities which are to remain in service subsequent to the construction of the particular new facility involved and the Contractor will be held responsible for any repairs if damaged. The Contractor shall also exercise care in maintaining those pipes and facilities required for continuing operation of the existing facilities until such time as they can be abandoned. There is no guarantee that all utilities or obstructions are shown on the Contract Drawings or that the locations indicated are accurate.

The Contractor shall exercise extreme caution in working in the area adjacent to the existing pipelines and utility services. It is essential that all the existing facilities be maintained in service. Construction of the connections between the existing facilities and the new facilities shall be at times and during periods acceptable to the City. The Contractor shall advise the Director in writing of its proposed Construction Schedule for these connections at least forty-eight (48) hours in advance.

The Contractor shall uncover all piping and conduits, to a point one foot (1') below the pipe, where crossings, interferences, or connections are shown on the Contract Drawings, prior to trenching or excavating for any pipe or structures, to determine actual elevations. New pipelines shall be laid to such grade as to clear all existing facilities which are to remain in service. If the Contractor does not expose all required utilities, it shall not be entitled to additional compensation for Work necessary to avoid interferences nor for repair to damaged utilities. Excavations around underground electrical ducts and conduits shall be performed using extreme caution to prevent injury or damage to workers and to the electrical ducts or conduits.

5-1.31 **PROPERTY RIGHTS IN MATERIALS.** Nothing in the Contract shall be construed as vesting in the Contractor any right of property in the materials used after they have been attached or affixed to the Work or soil or after partial payment has been made as provided in Section 7-1.07, "Progress Payments," of these General Conditions for material delivered on the ground or stored subject to or under the control of the City and unused. All such material shall become the property of the City upon being so attached or affixed or upon payment for materials delivered on the ground or stored subject to or under the control of the City and unused, as provided in said Section 7-1.07.

5-1.32 **COURT ORDERED DELAY.** If, pursuant to court order, the Department temporarily suspends performance of all or any portion of the Work, an extension of time determined pursuant to the provisions in Section 6-1.08, "Liquidated Damages," of these General Conditions will be granted.

5-1.33 **NO PERSONAL LIABILITY.** Neither the Director, nor any other officer or authorized employee of the City, shall be personally responsible for any liability arising under or by virtue of the Contract.

5-1.34 **RIGHTS IN LAND AND IMPROVEMENTS.** The Contractor shall make no arrangements with any person or entity to permit occupancy or use of any land, structure or building within the limits of the Work, for any purpose whatsoever, either with or without compensation, in conflict with any agreement between the City and any third party owner, former owner, or tenant of such land, structure or buildings. The Contractor shall not occupy City-owned property outside the limit of the Work shown on the Contract Drawings unless it obtains prior approval.

5-1.35 **ANTITRUST CLAIMS.** The Contractor's attention is directed to the following provision of Public Contract Code Section 7103.5(b), which is applicable to the Contractor and its Subcontractors:

> " In entering into a public works contract or a subcontract to supply goods, services, or materials pursuant to a public works contract, the contractor or subcontractor offers and agrees to assign to the awarding body all rights, title, and interest in and to all causes of action it may have under Section 4 of the Clayton Act (15 U.S.C. Sec. 15) or under the Cartwright Act (Chapter 2 [commencing with Section 16700] of Part 2 of Division 7 of the Business and Professions Code), arising from purchases of goods, services, or materials pursuant to the public works contract or the subcontract. This assignment shall be made and become effective at the time the awarding body tenders final payment to the contractor, without further acknowledgement by the parties."

5-1.36 **RIGHTS TO DRAWINGS, TECHNICAL DATA PATENTS.** Shop

Drawings and Working Drawings submitted to the City by the Contractor, Subcontractor or any lower tier Subcontractor pursuant to the Agreement, are the property of the City and the City may use, and disclose in any manner and for any purpose, Shop Drawings and Working Drawings delivered under the Contract.

Technical Data including manuals or instructional materials, computer or microprocessor software which are delivered or submitted to the City by the Contractor, Subcontractor, or any lower tier Subcontract pursuant to the Contract are the property of the City, and the City may use or disclose same in any manner and for any purpose.

The Contractor shall assume all costs arising from the use of patented materials, equipment, devices, or processes used on or incorporated in the Work, and shall defend, indemnify and save and hold harmless the City, and its duly authorized representatives, from all suits at law, or in equity, and actions of every nature for, or on account of the use of any patented materials, equipment, devices or processes. In case some materials, equipment, devices or processes are held to constitute an infringement and their use enjoined, the Contractor, at its expense, shall:

1. Secure for the City the right to continue using said materials, equipment, devices or processes by suspension of the injunction or by procuring a license or licenses; or
2. Replace such materials, equipment, devices, processes; or
3. Modify them so that they become non-infringing or remove the enjoined materials, equipment, devices or processes and refund the sums paid therefor without prejudice to any other rights of the City.

5-1.37 **PAYMENT OF TAXES.** Contractor shall pay all taxes and duties applicable to and assessable against any Work, equipment, materials, services, processes, and

operations incidental to or involved in the Agreement, including but not limited to, retail sales and use, transportation, export, import, business, and special taxes. The Contractor is responsible for ascertaining and acquainting itself with such taxes and making all necessary arrangements to pay them. The Contractor will maintain records that are auditable records, and these records shall be subject to the City's review to verify that Contractor's tax payments are current at all times.

The Contract Price paid for the Work shall include full compensation for all taxes which the Contractor is required to pay, whether imposed by Federal, State or local government, including, without being limited to, Federal excise tax. No tax exemption certificate nor any document designed to exempt the Contractor from payment of any tax will be furnished to the Contractor by the Department, as to any tax on labor, services, materials, transportation, or any other items furnished pursuant to the Contract.

The Contractor shall withhold and pay any and all sales and use taxes, withholding taxes, whether Federal, State, or local, Social Security taxes, State Unemployment Insurance charges and all other taxes which are now or hereafter may be required to be paid or withheld under any laws.

5-1.38 **GRATUITIES AND CONFLICT OF INTEREST.** The Contractor shall not offer or provide gratuities in the form of gifts, entertainment, loans, meals, rewards, and/or services to representatives of the City, including but not limited to, officers, employees, agents, Engineering Service Consultants, Consulting Engineers and Architects, Inspectors and/or Testing Agencies retained by the City. If it is found that the Contractor has violated this provision, the Contract may be subject to termination for default as defined elsewhere in these General Conditions.

During the term of the Contract and until the final payment has been made to the Contractor, the Contractor shall not employ or compensate in any manner whatsoever, the City's officers, employees and authorized representatives, agents, and any Engineering Service Consultants, Consulting Engineers and Architects, Inspectors, and/or Testing Agencies retained by the City. Any exception to the employment or compensation to any of the above named parties must be made in writing by the City. If the Contractor offers or provides employment or compensation to those named above during the term of the Contract, the Contract may be subject to termination for default.

5-1.39 **COOPERATION.** Should construction be under way by City forces or other forces or by other Contractors within or adjacent to the limits of the Work or should Work of any other nature be under way by such forces within or adjacent to said limits, the Contractor shall cooperate with all such forces to the end that any delay, interference or hindrance to their Work will be avoided. The right is reserved to perform other or additional Work at or near the site at any time, by the use of such forces.

5-1.40 **DIGGING TRENCHES OR OTHER EXCAVATIONS.** In the event any work involves digging trenches or other excavations that extend deeper than four feet (4') below the surface, City and Contractor shall comply with the following:

A. The Contractor shall promptly, and before the following conditions are disturbed, notify City in writing of any:

1. Material that the Contractor believes may be material that is hazardous waste, as defined in Section 25117 of the Health and Safety Code, that is required to be removed to a Class I, Class II, or Class III disposal site in accordance with provisions of existing law.

2. Subsurface or latent physical conditions at the site differing from those made available to Contractor for inspection as provided in the project proposal.

3. Unknown physical conditions at the site of any unusual nature, different materially from those ordinarily encountered and generally recognized as inherent in Work of the character provided for in the Contract.

B. The City shall promptly investigate the conditions, and if it finds that the conditions do materially so differ, or do involve hazardous waste, and cause a decrease or increase in the Contractor's cost of, or the time required for, performance of any part of the Work shall issue a Change Order under the procedures described in the Contract.

C. In the event that a dispute arises between the City and the Contractor whether the conditions materially differ, or involve hazardous waste, or cause a decrease or increase in the Contractor's cost of, or time required for, performance of any part of the Work, the Contractor shall not be excused from any scheduled completion date provided for by the Contract, but shall proceed with all work to be performed under the Contract. The Contractor shall retain any and all rights provided either by contract or by law which pertain to the resolution of disputes and protests between the contracting parties. However, no claim of the Contractor under this clause shall be allowed unless the Contractor has given the notice required by this Section. No claim by the Contractor for an equitable adjustment hereunder shall be allowed if asserted after final payment under this Contract.

5-1.41 **CONTRACTOR REGISTRATION.** No contractor or subcontractor may work on a public works project unless registered with the Department of Industrial Relations pursuant to Labor Code section 1725.5. During the performance of this Contract, the Contractor and its subcontractors shall have a continuing legal obligation to maintain current

registration with the Department of Industrial Relations. The Contractor is hereby notified that this project is subject to compliance monitoring and enforcement by the Department of Industrial Relations.

5-1.42 **CITY OF ROSEVILLE ENCROACHMENT PERMITS AND RIGHTS-OF-WAY.** The Contractor need not obtain a separate encroachment permit from the City prior to construction within street rights-of-way or other City rights-of-way. Execution of the Contract by the City shall be deemed an encroachment permit for work required by the Contract within rights-of-way. All work shall conform to the rules and regulations of encroachment permits and shall be subject to the inspection and approval of the Director and City Engineer.

To the extent indicated in the Contract Drawings, the City will provide the rights-of-way over private lands or the site to enable the Contractor to perform its work. The Contractor shall be solely responsible for securing any additional rights-of-way desired by the Contractor. The City will not be a party to nor assume any liability for any separate agreements reached between the Contractor and any third parties with respect to these additional rights-of-way. The Contractor shall procure evidence that agreements are in place with said third parties before the Contractor uses those areas covered by the agreements. Any damage to such private lands caused by the Contractor's operations shall be the sole responsibility of the Contractor.

SECTION 6

PROSECUTION AND PROGRESS

6-1.01 **SUBLETTING AND SUBCONTRACTING.** The Contractor shall be responsible for all Work performed under the Contract. The Contractor shall give its personal attention to the fulfillment of the Contract and shall keep the Work under its control. Nothing in the Contract Documents shall create any contractual relationship between the City and any Subcontractor. The Contractor is fully responsible to the City for the acts and omissions of its Subcontractors of any tier. When any Subcontractor fails to prosecute a portion of the Work in a manner satisfactory to the Director, that Subcontractor shall not again be employed on the Work. Although the sections of the Contract may be arranged according to various trades, or general grouping of the Work, the Contractor is not obligated to sublet the Work in such manner. The Director will not arbitrate disputes among Subcontractors or between Contractor and one or more Subcontractors concerning responsibility for performing any part of the Work.

The on-site production of materials produced by other than the Contractor's own forces shall be considered as subcontracted. The erection, establishment or reopening of on-site plants for production of materials and the operation thereof in the production of materials for use on the Work shall conform to the requirements relating to labor set forth in the Contract Documents.

The Contractor shall also be responsible for coordinating the Work performed by Subcontractors and Suppliers.

The Contractor shall not substitute any person as Subcontractor in place of a Subcontractor listed on its bid proposal without the written approval of the Director. Substitutions must be in accordance with the provisions of the "Subletting and Subcontracting

Fair Practices Act" beginning with Public Contract Code Section 4100. Violations of this Act by the Contractor may subject it to penalties which may include cancellation of Contract, Assessment of ten percent (10%) of the Subcontractor's bid, and disciplinary action by the Contractors State License Board.

The Contractor shall pay any Subcontractors approved by the City for work that has been satisfactorily performed no later than seven (7) Days from the date of Contractor's receipt of progress payments by the City. Within seven (7) Days after receipt from the City of funds attributable to work performed by a Subcontractor, Contractor shall release any retainage payments withheld to the Subcontractor. In the event Contractor does not make progress payments or release retention to Subcontractors in accordance with the time period specified herein, Contractor may be subject to prompt payment penalties per statute.

6-1.02 **ASSIGNMENT.** The performance of this Contract may not be assigned, except upon the written consent of the City Council of the City of Roseville. Consent will not be given to any proposed assignment which would relieve the original Contractor or its surety of their responsibilities under the Contract nor will the City consent to any assignment of a part of the Work under the Contract.

The Contractor may assign moneys due or to become due to it under the Contract and such assignment will be recognized by the City, if given proper notice thereof, to the extent permitted by law, but any assignment of moneys shall be subject to all proper set-offs in favor of the City and to all deductions provided for in the Contract and particularly all money withheld, whether assigned or not, shall be subject to being used by the City for the completion of the Work in the event that the Contractor should be in default therein.

6-1.03 **BEGINNING OF WORK.** After the execution of the Contract by both

parties, the City will issue the Notice to Proceed upon its determination that it is appropriate for the Contract Time to commence.

The Contractor shall begin Work within fifteen (15) Days after receiving the Notice to Proceed from the Director, subject to the requirements stated elsewhere in the Contract Documents regarding, among other things, the submittal of Baseline Schedule, and shall diligently prosecute the same to completion within the time limit provided in the Supplemental Conditions. Contractor shall also achieve any and all Contract milestones as described elsewhere in the Contract Documents.

The Contractor shall notify the Director, in writing, of its intent to begin Work at least seventy-two (72) hours before Work is begun. The notice shall be delivered to the Director and shall specify the date the Contractor intends to start. If the project has more than one (1) location of Work, a separate notice shall be given for each location.

The Contractor is not authorized to perform any Work until it has received a Notice to Proceed from the City. Should the Contractor begin Work in advance of receiving notice that the Contract has been approved as above provided, any Work performed by it in advance of the said date of approval shall be considered as having been done by the Contractor at its own risk and as a volunteer unless said Contract is so approved thereafter.

6-1.04 **PROGRESS SCHEDULE.**

A. Preliminary Progress Schedule. The Contractor shall submit to the Director, within twenty (20) Days after date of the Notice to Proceed, a Preliminary Progress Schedule covering the Contractor's activities over the first three (3) months of operation in detail and the remainder of the project in summary. The Preliminary Progress Schedule shall schedule the project within the Contract Time for completion of the Work, and shall be subject to

favorable review by the Director.

B. CPM Schedule. The Contractor shall submit an acceptable Critical Path Method (CPM) Schedule to the Director within thirty (30) Days after the receipt of the Notice to Proceed. Subsequent revisions to said schedule shall be submitted as set forth hereinafter. The requirement for the CPM schedule is included to allow for adequate planning and execution of the Work, to determine the critical nature of delays, and to assist the Director in appraising the reasonableness of the proposed schedule and evaluating progress of the Work. The CPM schedule submitted under this Section shall utilize a CPM format, either the precedence or arrow diagramming method. The definitions of CPM terms and functions shall be as provided in the Associated General Contractors of America book *CPM in Construction, A Manual for General Contractors*, or a favorably reviewed alternative publication or reference. No progress payment will be made prior to submission and acceptance of the CPM Schedule.

1. The CPM schedule system shall consist of diagrams and accompanying mathematical analyses. The diagrams shall show elements of the project in detail and an entire project summary. Diagrams shall show the order and interdependence of activities and sequence in which the Work is to be accomplished as planned by the Contractor. The basic concept of a network analysis diagram shall be followed to show how the start of a given activity is dependent on the completion of preceding activities and its completion restricts the start of following activities. Detailed network activities shall include, in addition to construction activities, the submittal and favorable review of samples of material and Shop Drawings, the procurement of critical materials and equipment, fabrication of special material and equipment, and their Installation and testing. All activities of the City and the Director that affect progress and required Contract dates for completion of all or parts of the Work shall be shown. The

selection and number of activities shall be subject to favorable review by the Director. Summary networks shall be time scaled. Durations shall be in Days and shall not exceed fifteen (15) Days, except for submittal and delivery items. Where the duration of continuous Work exceeds fifteen (15) Days, Work items in the Construction Schedule shall be subdivided by location, approximate stationing or other sub-element of the Work.

The graphic network diagram shall include for each activity, the description, activity number, the estimated duration in Days, and all activity relationship lines. The network diagram shall be drawn for the early start of activities. All significant Submittals shall be scheduled along with manual Submittals and training on all large or critical pieces of equipment. If the precedence technique is utilized, the schedule project shall include a calendar in Work Days, a network report sorted by early start and a logic table report sorted by preceding Work item. If the arrow technique is utilized, the schedule report shall include a calendar in Work Days, a network report sorted by early start, a network report sorted by I-J numbers, and a network sorted by slack time and I-J numbers.

2. The critical path shall be shown on all reports and on the graphic network diagram. The activities which constitute the critical path shall be identified.

3. The mathematical analysis of the network diagram shall include a tabulation of each activity. The following information shall be furnished as a minimum for each activity:

(a) preceding and following event numbers

(b) activity description and number

(c) estimated duration of activities

(d) earliest start date (by calendar date)

(e) earliest finish date (by calendar date)

(f) actual start date (by calendar date)

(g) actual finish date (by calendar date)

(h) latest start date (by calendar date)

(i) latest finish date (by calendar date)

(j) slack or float

(k) percentage of activity completed

4. The program shall be capable of accepting revised completion dates as modified by approved time adjustments and recomputations of all tabulation dates and float accordingly.

5. Submission and review of the system shall be as follows:

(a) The complete network analysis system, consisting of the detailed network mathematical analysis and network diagrams, shall be submitted within thirty (30) Days after receipt of the Notice to Proceed.

(b) The Contractor shall participate in a review and evaluation of the proposed network diagrams and analysis by the Director. Any revisions necessary as a result of this review shall be resubmitted for review by the Director within ten (10) Days. When completed, the favorably reviewed schedule shall then be the schedule to be used by the Contractor for planning, organizing and directing the Work and for reporting progress. If the Contractor thereafter desires to make significant changes in its method of operating and scheduling, the Contractor shall notify the Director in writing stating the reasons for the change.

(c) The Contractor shall submit at monthly intervals a report of the actual construction progress. Each monthly report shall cover a period of approximately thirty

(30) Days ending around the 20th of each month. The monthly reports shall be submitted within ten (10) Days of the end of the reporting period.

(1) If the project is proceeding on schedule, the monthly update report may consist of a marked-up copy of the graphical network diagram. This submittal shall clearly indicate the status of any minor shifts in sequence or schedule and the estimated completion date or percent complete of all activities currently in progress. The Contract completion date shall also be indicated. The Contractor shall submit a narrative report relating to status of construction, the schedule, and factors which may affect the remainder of the schedule. The report shall show the activities or portions of activities completed during the reporting period. The report shall state the percentage of the Work actually completed and scheduled as of the report date and the progress along the critical path in terms of Days ahead or behind the allowable dates.

(2) If, in the opinion of the Director, the project is behind schedule, the monthly report shall include a revised network diagram and/or mathematical analysis showing the Contractor's proposed revised schedule. An analysis of the effect that the delay has on progress along other paths shall also be included in the report. The Contractor shall also submit a narrative report with each updated analysis which shall include but not to be limited to a description of current and anticipated problem areas, delaying factors and their impact, and an explanation of corrective actions taken or proposed.

(3) Periodic report shall be submitted in sufficient copies to cover Contractor needs plus five (5) copies and an available electronic copy to be retained by the Director.

6. To the extent that the favorably reviewed initial Construction Schedule, or revisions thereto, indicate anything not jointly agreed upon, it shall be deemed to be not favorably reviewed by the Director. Any omission of Work from the detailed schedule, otherwise required for Contract compliance, will not excuse the Contractor from completing such Work within any applicable completion date. The CPM schedule shall be generated by computer methods.

C. Schedule Review. Once each month, on a date mutually agreed upon, but no later than seven (7) business days after the monthly schedule progress report date, a Work Site meeting will be held to review the Construction Schedule and job progress. The Contractor shall also attend weekly meetings scheduled by the Director to review the progress of the Work in the preceding week and in the subsequent week, coordinate the Work with public agencies or other Contractors as required, and allow the Director to plan his or her activities for testing, inspection, etc.

D. Schedule Revisions. The conditions under which the Director will require revisions of the Construction Schedule include the following:

1. When delay in completion of any Work item or sequence of Work items results in an estimated extension of project completion by either twenty (20) business days or by ten percent (10%) of the remaining duration of time to complete the Contract, whichever is less.

2. When delays in Submittals or deliveries make replanning or rescheduling of the Work necessary.

3. When the schedule does not represent actual prosecution and progress of the Work.

4. When any change to the sequence of activities, the completion date for major portions of the Work, or when changes occur which affect the critical path.

5. When Contract Amendments or a Change Order necessitates schedule revision, the Contractor shall submit a schedule analysis of all Change Order Work with its proposal.

E. Cash Flow Projection. A cash flow projection shall be submitted with the Construction Schedule. This cash flow projection shall be revised and resubmitted when revisions of the Construction Schedule will result in changes to the projected cash flow.

F. Schedules showing project completion dates earlier than specified in the Supplemental Conditions will be rejected unless justification can be provided for early completion.

6-1.05 **SCHEDULE OF VALUES.** Prior to preparation of the first estimate for a progress payment, the Contractor shall submit for favorable review by the Director a detailed Schedule of Values or cost breakdown of the Work under each bid item awarded. The breakdown will then become the basis for partial payment determination. Elements of Work shall be grouped by structure, pipeline, system, etc. Within each grouping, Work should be itemized by readily measurable quantities of Work complete in place. For example, concrete should be in units of cubic yards including form Work and reinforcing steel. Move-on costs, bond and insurance costs, and Overhead costs shall not be considered an item of cost for this purpose but shall be prorated over items of Work. In the event the Schedule of Values is not favorable reviewed by the Director, another Schedule of Values shall be submitted that is mutually acceptable to the Contractor and the Director.

6-1.06 **CITY'S RIGHT TO STOP WORK.** The Director shall have the

authority to order the Contractor, in writing, to suspend the Work wholly or in part, for such period as the Director may deem necessary due to the failure on the part of the Contractor to correct Work that is not in accordance with the requirements of the Contract Documents or if Contractor persistently fails to carry out Work in accordance with the Contract Documents.

The Contractor shall immediately comply with the written order of the Director to suspend the Work wholly or in part. The suspended Work shall be resumed when conditions are favorable and methods are corrected, as ordered or approved in writing by the Director.

Any stoppage of work under this section shall be at the Contractor's sole expense, and the Contractor shall have no claim against the City based on the Contractor's failure to perform the Work in accordance with the Contract Documents.

In addition to the City's right to stop Work, the City may order the Contractor to submit to the City at no additional cost to the City, additional information concerning Contractor's planned Work if the Contractor fails to promptly correct Work that is not in accordance with the requirements of the Contract Documents or persistently fails to carry out Work in accordance with the Contract Documents. The additional information ordered by the City may include, but is not limited to, preparation of Submittals or Working Drawings not otherwise required to be submitted under the Contract Documents.

In the event the City discovers that the Contractor has created an unsafe condition the City may arrange for other work forces to remedy the condition. Such remedial work shall be at the sole discretion of the City. If this action is required, the City may unilaterally terminate Work under the Contract, and will pay only for the quantities of Work actually performed, less the cost of the City's remedial Work. In the event that Work is not halted, the Contractor must take immediate steps to correct the situation. There will be no extra payment for Work required

to correct unsafe conditions.

The right of the City to suspend the Work shall not give rise to a duty on the part of the City to exercise this right for the benefit of the Contractor or any other person or entity. This right shall be in addition to and not in restriction or derogation of the City's other rights under the Contract Documents.

In the event of a suspension of Work under any of the conditions set forth in this Section 6-1.06, such suspension of Work shall not relieve the Contractor of its legal responsibilities as set forth in these General Conditions.

6-1.07 **TIME OF COMPLETION.** The Contractor shall complete the entire Work, including Installation, repairs, startup, troubleshooting, painting, and touchup, training, submittal or record drawings, and manuals, cleanup, demobilization, and all other Work within the number of Days set forth in the Supplemental Conditions. The time for completion includes an allowance for working time lost due to normal inclement weather.

Extensions of time may be allowed for unusual inclement weather under the provisions hereinafter described. Unusual inclement weather is weather which adversely affects "controlling" operations or the critical path of construction and which meets one of the following criteria:

A. For the particular calendar month in question, the number of individual Days with rainfall exceeding 0.10 inches exceeds the average number of such Days for that month over the immediately preceding five (5) years of record by at least three (3) Days.

B. For the particular calendar month in question, the total cumulative rainfall for that month exceeds the average cumulative rainfall for that month over the immediately preceding five (5) years of record by at least two inches (2").

Rainfall shall be measured at a publicly operated, maintained, and reported station in reasonable proximity to the construction site. A claim for delay shall indicate the period of rainfall which is claimed as "unusual," the specific dates during which the unusual rainfall and subsequent wet soil conditions prevented Work, and the specific critical path tasks adversely affected by such unusual weather. A claim for delay due to unusual inclement weather shall be filed within ten (10) Days of the apparent end of the unusual inclement rainfall period, whether or not the monthly totals are available at that time. The burden of proof that weather meets the criteria for unusual weather shall be solely the responsibility of the Contractor.

It is the responsibility of the Contractor to order materials required for the Work properly and promptly on a Notice to Proceed. If evidence presented demonstrates that, in spite of the Contractor's efforts, government-established priorities controls delay material deliveries, suitable extension of time will be made.

If performance of extra Work ordered by the City or failure of the City to provide the necessary site for Installation affects construction tasks which are "controlling" or which are on the "critical path" of the Construction Schedule, suitable extensions of time will be made.

The Contractor shall not be entitled to a time extension for delays in activities on non-critical paths of the favorably reviewed schedule unless the duration of the excusable delay exceeds the total float of the activities being delayed. If the duration of an excusable delay does exceed the total float of the activities affected by the delay, the Contractor shall be entitled to an extension equal to the difference.

C. Determination that a day is a non-working day by reason of inclement weather or conditions resulting immediately therefrom, shall be made by the Director.

6-1.08 **LIQUIDATED DAMAGES.** It is agreed by the parties to the Contract

that in case all the Work called for under the Contract in all parts and requirements is not completed within the number of Days as set forth in the Supplemental Conditions, damage will be sustained by the City and that it is and will be impracticable and extremely difficult to ascertain and determine the actual damage which the City will sustain in the event of and by reason of such delay; and it is therefore agreed that the Contractor will pay to the City, the monetary amount indicated in the Supplemental Conditions in dollars (U.S.) per day for each and every calendar day of delay in completing the Work in excess of the number of Days prescribed and the number of additional calendar days, if any, authorized by Contract Change Order; and the Contractor agrees to pay said Liquidated Damages herein provided for, and further agrees that the City may deduct the amount thereof from any moneys due or that may become due the Contractor under the Contract.

It is further agreed that in case the Work is not finished and completed in all parts and requirements within the number of Days specified, the City shall have the right to increase the number of Days or not, as it may deem best to serve the interest of the City, and if it decides to increase the said number of Days, it shall further have the right to charge to the Contractor, its heirs, assigns or sureties and to deduct from the final payment for the Work all of any part, as it may deem proper, of the actual cost of engineering, inspection, superintendence, and other Overhead expenses which are directly chargeable to the Contract, and which accrue during the period of such extension, except that cost of preparation of final statement shall not be included in such charges.

6-1.09 **DELAYS AND EXTENSIONS TO THE WORK.** The Contractor must complete all Work within the time specified in the Agreement. The Contractor will be granted an extension of time and will not be assessed with liquidated damages or the cost of engineering

and inspection for any delay in substantially completing the Work (or parts thereof) beyond the time set forth in the Agreement, provided that such delay was caused by unforeseeable causes beyond the control and without the fault or negligence of the Contractor. Examples of such causes include acts of public enemy, fire, floods, abnormal weather (as described below), earthquakes, epidemics, quarantine restrictions, strikes, labor disputes and freight embargoes, fire, changes made pursuant to the provisions of "Changes in the Work" under Section 3 of these General Conditions or acts or neglect of the City not contemplated by the Contract Documents. In all cases, any extension of time is conditioned on the following:

1. That the cause is not due to the fault or negligence of the Contractor, and the Contractor has taken reasonable precautions to prevent and minimize the effects thereof; and

2. That the Contractor notifies the Director in writing within three (3) Days from the beginning of such delay specifying the nature of the delay and the measures that have been or will be taken to prevent or minimize the delay. Failure to submit written notice within this time period shall constitute an absolute waiver of any claim for a time extension.

No extension of time will be granted for a delay caused by a shortage of materials, unless the Contractor furnishes to the City documentary proof that it has diligently made every effort to obtain such materials from all known sources within reasonable reach of the work and further proof, as acceptable to the Director, that the inability to obtain such materials when originally planned did in fact cause a delay in Final Completion of the entire Work which could not be compensated for by revising the sequence of the Contractor's operations. Only the physical shortage of material will be considered as a cause for extension of time, and no consideration

will be given to any claim that material could not be obtained at a reasonable, practical or economical cost or price, unless it is shown to the satisfaction of the City that such material could have been obtained only at exorbitant prices entirely out of line with current rates, taking into account the quantities involved and the usual practices in obtaining such quantities.

No extension of time will be granted for a delay caused by Contractor's staff turnovers, understaffing or insufficient quantity of qualified staff able to perform the necessary work.

The term "shortage of materials," as used in this section, shall apply only to materials, articles, parts or equipment which are standard items and shall not apply to materials, parts, articles or equipment which are processed, made, constructed, fabricated or manufactured to meet the specific requirements of the Contract Documents.

No extensions of time will be granted for delays that have no measureable impact on the completion of the Work (or parts thereof) under the Contract Documents. When extensions of time are granted, they will be limited to the period equivalent to the actual number of Days lost on the critical path or controlling operations of the Construction Schedule, taking into account the extent to which that delay could be decreased by reasonable mitigation measures by the Contractor. All requests for extensions of time must be supported with a critical path analysis showing the critical path and impacts to it. Contractor's failure to submit this analysis will be sufficient cause for denial of any request for a time extension.

Within a reasonable period of time after the Contractor submits the notice and information required by this section, the City will determine whether an extension of time is justified and, if so, the number of days for the extension.

Abnormal weather may be a valid basis for a time extension under the Agreement. "Abnormal Weather" occurs when the number of days of rain above 0.5 inches in a 24 hour

period exceeds the average for such rainfall in a particular month as determined by the National Weather Service. The Contractor will only be entitled to, at most, a time extension for the number of days of rain exceeding the average for that month in the locale where the Work is to be performed. If delays are caused by the Contractor or those for whom the Contractor is responsible, the Contractor will only be entitled to, at most, a time extension for the number of rain days exceeding the average for the month when the Work should have been performed.

In addition, before a time extension may be granted for abnormal weather, the Contractor must establish that the rain either significantly impacted at least sixty percent (60%) of the planned work of the controlling operations for a particular day or prohibited at least five (5) hours of work on the controlling operations planned for that day. Contractor shall employ reasonably methods to mitigate the impact of abnormal weather (i.e., dewatering, protection of site, etc.) The occurrence of rain during non-work hours or having minimal impact to work on the controlling operation shall not constitute a day of abnormal weather.

In the event that the project experiences favorable weather for a particular month (e.g., the number of actual rain days in a month less than that indicated above for allowable rain days per months), the additional float resulting from such favorable weather shall accrue to the project.

Any Contractor claim for damages or additional compensation based on delay shall be limited to only those circumstances where the Contractor has fulfilled each of the following three (3) requirements:

1. Contractor has established its entitlement to a time extension pursuant to the provisions described above regarding delay and extensions to the Work.
2. The delay was caused solely by the City's issuance of changes made pursuant to the

provisions of "Changes in the Work" under Section 3 of these General Conditions or by acts or neglect of the City.

3. The delay was unreasonable under the circumstances and not within the contemplation of the parties.

It is expressly understood and agreed that delays caused by the City will be non-compensable when there are concurrent delays caused by the Contractor. Also, the Contractor shall have no entitlement to additional compensation for any delay where there have been concurrent delays caused by non-compensable delays, including, but not limited to, fire, floods, earthquakes, epidemics, quarantine restrictions, strikes, labor disputes, and freight embargoes.

Contractor's damages and/or additional compensation for delays will consist solely of the extended costs of maintaining the Contractor's Work Site presence. The Contractor will not be entitled to any extended home office overhead.

Compensation for idle time of equipment will be determined in the same manner as determinations are made for equipment used in the performance of extra work paid for on a Force Account basis with the following exceptions:

1. The time for which compensation will be paid will be the actual normal working hours during which such delay conditions exists, but in no case will exceed eight (8) hours in any one day.
2. The days for which compensation will be paid will be each calendar day of the work week (defined elsewhere in the Contract Documents) and Legal Holidays, during the existence of such delay, except that when rental of the equipment is paid for under the provisions in Section 3-1.06C, "Force Account Payment – Equipment," of these General Conditions, no payment will be made for delays in accordance with the

provisions of this section.

Actual loss shall be understood to include no items of expense other than idle time of personnel, cost of extra moving of equipment, and cost of longer hauls. Compensation for idle time of equipment will be determined as provided in this section and compensation for idle time of personnel will be determined pursuant to Section 3-1.06A, "Force Account Payment – Labor," of these General Conditions. No markup will be added in either case for Overhead and profit. The cost of extra moving of equipment and the cost of longer hauls will be paid for as extra work as provided pursuant to "Changes to the Work" elsewhere in the Contract Documents.

6-1.10 **TERMINATION.**

6-1.10A **TERMINATION OF AGREEMENT – CONVENIENCE OF CITY.** The Department reserves the right to terminate the Contract at any time and for any reason if the Director determines that to do so would be in the best interest of the City. Any termination which is not based on the circumstances set forth in Section 6.1-10B below shall be effected by delivery to the Contractor of a Notice of Termination specifying the extent to which performance of Work under the Contract is terminated, and the date upon which such termination becomes effective.

Upon the Contractor's receipt of a written Notice of Termination for convenience, the Contractor shall cease Work as to those portions of the project so terminated and shall undertake the steps outlined in Section 6-1.10B below.

1. Acceptance of the Contract as hereinafter specified shall not relieve the Contractor of responsibility for damage to materials except as follows:

   a. The Contractor's responsibility for damage to materials for which partial payment has been made as provided in Section 7-1.07, "Progress

Payments," of these General Conditions and for materials furnished by the City for use in the Work and unused shall terminate when the Director certifies that such materials have been stored in the manner and at the locations he or she has directed.

b. The Contractor's responsibility for damage to materials purchased by the City subsequent to the issuance of the notice that the Contract is to be terminated shall terminate when title and delivery of such materials has been taken by the City.

c. When the Director determines that the Contractor has completed the Work under the Contract directed to be completed prior to termination and such other Work as may have been ordered to secure the project for termination, the Contractor will recommend that the City formally accept the Work, and immediately upon and after such Acceptance by the City, the Contractor will not be required to perform any further Work thereon and shall be relieved of its contractual responsibilities for injury to persons or damage to property which occurs after the formal Acceptance of the project by the City.

2. The total compensation to be paid to the Contractor shall be determined by the Director on the basis of the following:

a. The reasonable cost to the Contractor, without profit, for all Work performed under the Contract, including mobilization, demobilization and Work done to secure the project for termination. Reasonable cost will include a reasonable allowance for project Overhead and general

administrative Overhead not to exceed a total of seven percent (7%) of Direct Costs of such Work.

b. A reasonable allowance for profit on the cost of the Work performed as determined under subsection (a), provided the Contractor establishes to the satisfaction of the Director that it is reasonably probable that it would have made a profit had the Contract be completed and provided further, that the profit allowed shall in no event exceed four percent (4%) of said cost.

c. The reasonable cost to the Contractor of handling material returned to the vendor, delivered to the Department or otherwise disposed of as directed by the Director.

d. A reasonable allowance for the Contractor's administrative costs in determining the amount payable due to termination of the Contract.

All records of the Contractor and the Contractor's Subcontractors, necessary to determine compensation in accordance with this Section, shall be open to inspection or audit by representatives of the Department at all times after issuance of the notice that the Contract is to be terminated and for a period of three (3) years, and such records shall be retained for that period.

After Acceptance of the Work by the Director, the Director may make payments on the basis of interim estimates pending issuance of the Final Statement, when in his or her opinion the amount thus paid, together with all amounts previously paid or allowed, will not result in total compensation in excess of that to which the Contractor will be entitled. All payments, including payment upon the Final Statement, shall be subject to deduction for prior payments and amounts, if any, to be kept or retained under the provisions of the Contract.

In the event that the City terminates this Contract under Section 6-1.10B below and it is determined for any reason that there was not sufficient cause to do so, the City's termination automatically will convert to a termination for convenience under this section and the terms and conditions outlined in this section automatically will be applied to effectuate the Contract termination. Thus, damages to which a Contractor may be entitled as a result of an improper default termination will be limited to the amounts provided for in this section.

The provisions of this section shall be included in all subcontracts.

6-1.10B **TERMINATION OF AGREEMENT - FOR CAUSE.** An "Event of Default" as referred to in this section shall occur if the Contractor:

1. Fails to maintain progress of the Work in accordance with the requirements of the Contract Documents; or
2. Fails to prosecute the Work or any of its components in accordance with the Contract Documents; or
3. Persistently or repeatedly fails or refuses to supply sufficient properly skilled workers or proper material to permit the performance of the Work in accordance with the Contract Documents; or
4. Fails to make prompt payment to Subcontractors or Suppliers in accordance with the respective agreements between the Contractor and the Subcontractor and Contractor and Supplier; or
5. Fails to comply with applicable laws, ordinances or rules, regulations or orders of a public authority having jurisdiction over the Work; or
6. Abandons, assigns or sublets the Contract without approval of the City; or
7. Becomes bankrupt or is subject to appointment of a receiver on behalf of the

Contractor; or

8. Otherwise is guilty of a substantial breach of a provision of the Contract Documents.

Upon the City's reasonable belief that there has been an Event of Default by the Contractor, the City may elect to give the Contractor written notice thereof. The Contractor thereafter shall cure the default as soon as possible and in no event after ten (10) Days from the Contractor's receipt of the City's written notice.

If the Contractor does not timely cure its default, the City may, without waiver of any of its other rights and remedies, elect to terminate the Contract, or portion thereof.

Upon the City's election to terminate the Contract, or portion thereof, the City shall have the right to complete the Work, or portion involved, by whatever means and methods it deems expedient, including the hiring of others on such terms as the City deems advisable. The City shall have the right to take possession of the Contractor's materials, plant, tools, equipment and property of any kind provided by or on behalf of the Contractor for the purpose of the Work, or a portion of them, without being responsible to the Contractor for wear and tear. The Contractor shall have no rights in such property during its use by the City. The City shall not be required to obtain the lowest prices for completing the Work or a portion of it but shall make such expenditures as, in the City's sole judgment, best accomplish such completion.

The expense of completing such Work or portion thereof, together with a reasonable charge for engineering, managerial and administrative services, as certified by the City, shall be charged to the Contractor, and the expense so charged shall be deducted by the City out of such monies as may be due or may at any time thereafter become due to the Contractor. In case such expense is more than the sum which otherwise would have been payable to the Contractor under the Agreement, then the Contractor or its surety or sureties shall promptly pay the amount of

such excess so due. When the City terminates the Contract under this section, the Contractor shall not be entitled to receive any further payments until the Work is completed and there has been a final settlement of costs of completing the Work covered by such notice of default.

The City will issue to the Contractor a written notice specifying that the Contract, or portion thereof, is terminated. Upon receipt of said written notice and, except as otherwise directed in writing by the City, the Contractor shall:

1. Stop all Work under the Contract; or if partial termination, stop Work relating to the terminated portion of the Agreement;
2. Perform Work the City deems necessary to secure the Work Site for termination including measures to leave the Work Site in a safe condition;
3. Remove equipment from the site of Work, as specified by the City;
4. Take such action as is reasonably necessary to protect materials from damage;
5. Notify all Subcontractors and Suppliers that the Contract or portion thereof is being terminated and that their contracts or orders are not to be further performed unless otherwise authorized in writing by the City;
6. Provide the City with an inventory list of all materials previously produced, purchased or ordered from Suppliers for use in the Work and not yet used in the Work, including its storage location, and such other information as the City may request;
7. Dispose of materials not used in the Work as directed by the Director. It shall be the Contractor's responsibility to provide the City (a) with good title to all materials purchased by the City hereunder, including materials for which partial payment has been made by the City and (b) with bills of sale or other documents of title for such

materials;

8. Subject to the prior written approval of the City, settle all outstanding liabilities and all claims arising out of Subcontractors or orders for materials terminated hereunder. To the extent directed by the City, the Contractor shall assign to the City all rights, title and interests of the Contractor under subcontracts or orders for materials terminated hereunder. The City shall be at liberty to negotiate with and engage any Subcontractors who had contracted with the Contractor for the Work;
9. Furnish the City with the documentation required to be furnished by the Contractor under the provisions of the Contract Documents, including, on projects as to which Federal funds are involved, all documentation required under the Federal requirements included in the Agreement; and
10. Take such other actions as the City may direct.

If only a portion of the Work has been terminated, the Contractor shall perform the remainder of the Work in conformity with the Contract Documents and in such a manner as not to interfere with the City or others in their performance and completion of the portion of the Work which was terminated.

The City may recover from the Contractor the amount of any loss or damage, including consequential damages, suffered or incurred as a result of the Contractor's default.

SECTION 7

ACCEPTANCE AND PAYMENT

7-1.01 **ACCEPTANCE.** When the Contractor believes that the entire Work is fully and finally completed, including the satisfactory completion of inspections, tests, and documentation specified in the Contract Documents and completion of all punch list and clean-up items, the Contractor shall submit to the City a written request for final Acceptance within fifteen (15) Days thereafter, specifying that the Work is fully and finally completed and the date on which it was completed. Within thirty (30) Days after receipt of the request for final Acceptance, the City will inspect the Work and will either:

1. Reject the request for final Acceptance, specifying the defective and/or uncompleted portions of the Work; or
2. Notify the Contractor that the Work will be accepted by Resolution of the City Council of the City of Roseville, and a Notice of Completion will be caused to be recorded by the City Clerk; or
3. Notify the Contractor that the Work has been accepted by the City but no Notice of Completion will be recorded.

If the City rejects the request for final Acceptance, the Contractor shall promptly remedy the defective and/or uncompleted portions of the Work. Thereafter, the Contractor shall again submit a written request for final Acceptance of the Work, specifying a new date based on the date the defective and/or uncompleted portions of the Work were corrected. Thereafter, the foregoing procedure shall apply successively until the City has verified that the Work is fully and finally completed and accepted the Work by Resolution of the City Council or by written

notification from the Director. Immediately upon such Acceptance, the Contractor shall be relieved of the duty of maintaining the Work as a whole.

All warranties commence upon final Acceptance of the Work. The City's final Acceptance of the Work shall not be construed as an acceptance by the City of any latent defects discovered with regard to the Contractor's work. Furthermore, Contractor's obligations under Section 5-1.22 "Responsibility for Damage and Indemnification" shall still remain applicable after the City's grant of final Acceptance of the Work.

Prior to final Acceptance, the Contractor shall submit to the City the Record Documents and Operation and Maintenance Manuals as specified in the Contract Documents.

7-1.02 **SCOPE OF PAYMENT.** The Contractor shall accept the compensation provided in the Contract as full payment for furnishing all labor, materials, tools, equipment, and incidentals necessary to the completed Work and for performing all Work contemplated and embraced under the Contract; also for loss or damage arising from the nature of the Work, or from the action of the elements, or from any unforeseen difficulties which may be encountered during the prosecution of the Work until the Acceptance by the Director and for all risks of every description connected with the prosecution of the Work, also for all expenses incurred in consequence of the suspension or discontinuance of the Work as provided in the Contract; and for completing the Work according to the Contract. Neither the payment of any estimate nor of any retained percentage shall relieve the Contractor of any obligation to make good any defective Work or material.

No compensation will be made in any case for loss of anticipated profits.

7-1.03 **NOTICE OF POTENTIAL CLAIM.** The Contractor shall not be entitled to the payment of any additional compensation for any act or failure to act by the City,

including failure or refusal to issue a Change Order, or for the happening of any event, thing, occurrence or other cause unless the Contractor has given the City due written Notice of Potential Claim as hereinafter specified, provided, however, that compliance with this Section 7-1.03 shall not be a prerequisite as to matters within the scope of the notice provisions in Section 6-1.07, "Time of Completion," or the notice provisions in Section 6-1.08, "Liquidated Damages," of these General Conditions, nor to any claim which is based on differences in measurement or errors of computation as to correct quantities.

The written Notice of Potential Claim shall set forth the reasons for which the Contractor believes additional compensation will or may be due, the nature of the costs involved, and, insofar as possible, the amount of the potential claim. The said Notice as above required must have been given to the Director prior to the time that the Contractor shall have performed the Work giving rise to the potential claim for additional compensation, if based on an act or failure to act by the Director, or in all other cases within seven (7) Days after the happening of the event, thing, occurrence or other cause giving rise to the potential claim.

If the Notice of Potential Claim does not include complete information about the claim or the parties do not execute a Contract Change Order in connection with the Notice of Potential Claim, Contractor shall submit complete information about its claim for additional compensation and/or extension of time for performance within fifteen (15) Days after such work is performed. Failure to provide written notice of claim prior to undertaking such work or failure to timely submit a complete and specific information about the claim for additional compensation and/or extension of the time for performance shall be deemed a waiver and abandonment of such claim.

If there is a dispute over any claim, the Contractor shall continue to Work during the dispute resolution process in a diligent and timely manner as directed by the City, and shall be

governed by all applicable provision of the Agreement.

The Contractor shall maintain cost records of all Work that is the basis of any dispute. On a daily basis, Contractor shall submit to City completed daily forms, the format of which will be acceptable to the City, with respect to the Contractor's costs of performing the disputed work. These daily forms shall itemize all of Contractor's costs in performing the disputed work, including, but not limited to, all costs relating to materials, labor and equipment with respect to the disputed work. These daily forms shall provide names or identification and classification of affected workers, the hourly rate of pay and hours worked, and also the size, type, and identification number of equipment and hours operated. Said daily work forms shall be duly signed and verified by the Contractor or its authorized representative. The City's receipt of the Contractors' daily forms shall not constitute an approval of the Contractor's claim. Contractor's failure to submit the daily forms on a daily basis shall constitute a waiver of the Contractor's right to claim any additional compensation for the disputed work.

Each Contractor claim shall include full and complete information concerning the Claim. Contractor shall provide a clear, concise recital of the basis, upon which the claim is asserted, including a designation of the provisions of the Contract Documents upon which the claim is based. Contractor shall also include a statement as to the amount of time and/or compensation sought pursuant to the claim; if Contractor's claim arises from an ongoing occurrence, Contractor shall so state in its claim, including a description of the specific Work activities affected by the claim. All costs, expenses or damages and extensions of time claimed shall be described in reasonable detail under the circumstances together with complete supporting documentation.

The City will review any timely Notice of Potential Claim and supporting information

submitted by Contractor. In conducting this review, the City shall have the right to require the Contractor to submit such additional or supporting documents, data and other information as the City may require.

If an agreement can be reached which resolves the Contractor's claim, the parties will execute a Contract Change Order to document the resolution of the claim. If the parties cannot reach agreement with respect to the Contractor's claim, the Contractor shall still be obligated to comply with the claim identification provisions identified in these General Conditions, including but not limited to Section 7-1.04.

It is the intention of this Section 7-1.03 that differences between the parties arising under and by virtue of the Contract be brought to the attention of the Director at the earliest possible time in order that such matters may be settled, if possible, or other appropriate action promptly taken. The Contractor hereby agrees that it shall have no right to additional compensation for any Claim that may be based on any such act, failure to act, event, thing or occurrence for which no timely written Notice of Potential Claim as herein required was filed.

7-1.04 **CLAIMS.** Contractor must submit all Claims, for which it has previously submitted a Notice of Potential Claim, prior to Acceptance of the Work. Each such Claim must be sent to the City by registered mail or certified mail with return receipt requested and must contain reasonable documentation to support the Claim.

Upon receipt of a Claim, the City shall conduct a reasonable review of the Claim and, within a period not to exceed forty-five (45) Days, or such further time as mutually agreed upon or necessary pursuant to Public Contract Code Section 9204, the City shall provide the Contractor a written statement identifying what portion of the Claim is disputed and what portion is undisputed. If the City does not respond to a Claim from the Contractor within the time

specified herein, such Claim shall be deemed rejected in its entirety.

Any payment due on an undisputed portion of the Claim shall be processed and made within sixty (60) Days after the City issues its written statement.

If the Contractor disputes the City's written response, or if the City does not respond within the time specified herein, the Contractor may demand in writing an informal conference to meet and confer for settlement of the issues in dispute. Upon receipt of a demand in writing sent by registered mail or certified mail, return receipt requested, the City shall schedule a meet and confer conference within thirty (30) Days for settlement of the dispute.

Within ten (10) business days following the conclusion of the meet and confer conference, if the claim or any portion of the claim remains in dispute, the City shall provide the Contractor a written statement identifying the portion of the Claim that remains in dispute and the portion that is undisputed. Any payment due on an undisputed portion of the Claim shall be processed and made within sixty (60) Days after the City issues its written statement. Any disputed portion of the Claim, as identified by the Contractor in writing, shall be submitted to nonbinding mediation, with the City and the Contractor sharing the associated costs equally. The City and the Contractor shall mutually agree to a mediator within ten (10) business days after the disputed portion of the Claim has been identified in writing. If the parties cannot agree upon a mediator, each party shall select a mediator and those mediators shall select a qualified neutral third party to mediate with regard to the disputed portion of the Claim. Each party shall bear the fees and costs charged by its respective mediator in connection with the selection of the neutral mediator. If mediation is unsuccessful, the parts of the Claim remaining in dispute shall be resolved in accordance with Section 7-1.05 below.

7-1.05 **DISPUTE RESOLUTION PROCEDURE.** All Claims not resolved

pursuant to Section 7-1.04, shall be resolved pursuant to Public Contract Code Section 10240, et seq.

7-1.06 **STOP PAYMENT NOTICES.** The City, by and through the Department or other appropriate office or officers, may at its option and at any time retain out of any amounts due the Contractor, sums sufficient to cover claims, filed pursuant to Civil Code Section 9350, et seq., including an amount to provide for the reasonable cost of any litigation thereunder.

7-1.07 **PROGRESS PAYMENTS.** Within fifteen (15) Days after the effective date in the Notice to Proceed, but in any event prior to Contractor's first Application for Payment, the Contractor shall submit to the City a detailed Schedule of Values.

Upon its approval, the Schedule of Values will form a basis for determining the compensation payable to the Contractor based on its actual progress of Work with respect to each Lump Sum bid item. The City, prior to any progress payment being made, must approve the Schedule of Values.

At the Director's discretion the approved Schedule of Values may be used as the basis for calculating the adjustment in compensation for a lump sum bid item due to changes ordered by the Director. When an ordered change increases or decreases the quantities shown in an approved Schedule of Values, at the Director's discretion, the adjustment in compensation may be determined in the same manner specified for increases and decreases in the quantity of a bid item of work in accordance with Section 3-1.05(B), "Contract Price Adjustment," of these General Conditions.

The Contractor once in each month shall submit an Application for Payment, for approval by the Director. Contractor's Applications shall be based on the Schedule of Values submitted to the City. These applications shall be supported by: (1) documentation requested by the City to

substantiate the payment request; (2) statutory releases from Contractor and all Subcontractors and suppliers pursuant to Civil Code Sections 8132 and 8138; and (3) certified payroll records for the period for which payment is requested. Specifically, the Contractor will submit conditional waivers upon progress payment executed by all contractors and suppliers that will be receiving sums sought in the instant payment request and also submit unconditional waivers upon progress payment executed by all contractors and suppliers that have been paid to the date of the payment request. The Contractor shall certify that the Work for which payment is requested has been accomplished. When requested by the City, the Contractor shall submit receipts, invoices and other documentation that the City requires to be furnished for purpose of evaluating the application.

The City will pay the Contractor within thirty (30) Days after its receipt of an undisputed and properly submitted Application for Payment, after deducting all previous payments, retention, and other sums as described in the Contract Documents. Within seven (7) Days of its receipt of the Contractor's Application for Payment, the City will determine whether it complies with the provisions of the Contract Documents. As appropriate, the City will return the application to the Contractor accompanied by a document prepared by the City setting forth the reasons for the rejection. Thereafter, the Contractor shall correct and resubmit the Application for Payment. Progress payments may be withheld for Work that is not performed in accordance with the Contract Documents.

The City may deduct the following from each progress payment:

1. An amount equal to one hundred and twenty-five percent (125%) of the amount claimed under any stop payment notice or other lien filed against the Contractor, which includes an amount to provide for the reasonable cost of any litigation

thereunder.

2. Any Liquidated Damages or Assessments that have accrued as of the date of the Application for Payment.
3. Any sums expended by the City in performing any of the Contractor's obligations under the Agreement that the Contractor has failed to perform.
4. Any other sums that the City is entitled to recover from the Contractor under the terms of the Contract including damages to the City's property.
5. The failure of the City to deduct any of the above identified sums from a progress payment shall not constitute a waiver of the City's right to such sums.

No such estimate or payment shall be construed to be an acceptance of any defective Work or improper materials.

Under no circumstances will the City make payment to unlicensed Contractors. As a condition of payment, the Contractor is required to maintain the applicable Contractor's license as identified in the Notice to Contractors for the duration of the Work.

7-1.08 **PAYMENT FOR MATERIALS AND EQUIPMENT ON HAND.**

Partial payments may be made to the extent of seventy-five percent (75%) of the cost of materials and equipment plus delivery to be incorporated in the Work, provided that such materials and equipment meet the requirements of the Contract Documents and are delivered to acceptable sites on the plant site or at other sites in the vicinity that are acceptable to the City and only with the prior written approval by the City. Such delivered costs of stored or stockpiled materials and equipment may be included in the next progress payment after the following conditions are met:

A. Equipment and materials will only be eligible if given conditional or final

Acceptance by the Director and are in apparent compliance with favorably reviewed Submittals.

B. Only equipment or materials which have received favorable review of Shop Drawings will qualify.

C. The material or equipment has been stored or stockpiled adequately protected against damage in a manner acceptable to the Director at an approved site.

D. The Contractor has furnished the Director with acceptable evidence of the quantity and the quality of such stored or stockpiled materials or equipment with identification of where they will be incorporated into the project with Specification reference.

E. The Contractor has furnished the Director with satisfactory evidence that the material or equipment and transportation costs have been paid.

F. The Contractor has furnished the City legal title (free of liens or encumbrances of any kind) and lien releases to the material or equipment so stored or stockpiled.

G. The Contractor has furnished the City evidence that the material or equipment so stored or stockpiled is insured against loss by damage to or disappearance of such materials at any time prior to use in the Work.

It is understood and agreed that the transfer of title and the City payment for such stored or stockpiled materials or equipment shall in no way relieve the Contractor of its responsibility for furnishing and placing such materials or equipment in accordance with the requirements of the Contract Documents.

In no case will the amount of progress payments for materials or equipment on hand exceed the Contract Price for such materials or equipment or the Contract Price for the Contract item in which the material is intended to be used.

No partial payment will be made for stored or stockpiled living or perishable plant

materials.

The Contractor shall bear all costs associated with the progress payment of stored or stockpiled materials or equipment in accordance with the provisions of this Section.

7-1.09 **RETENTION ON PROGRESS PAYMENTS.** From each progress payment estimate, five percent (5%) will be deducted and held in retention by the City. The remainder, less any deductions described in Section 7-1.07, "Progress Payments," of these General Conditions, will be paid to the Contractor as progress payments.

Pursuant to Public Contract Code Section 22300, the successful Bidder may submit Securities in lieu of retention payments by the City. Upon the Contractor's request, the City will make payment of funds withheld from progress payments, pursuant to the requirements of California Public Contract Code Section 22300, if the Contractor deposits in escrow with the City or with a bank acceptable to the City, securities eligible for investment under California Government Code Section 16430, bank or savings and loan certificates of deposit, interest bearing demand deposit accounts, standby letters of credit, or any other security mutually agreed to by the Contractor and the City, upon the following conditions:

1. The Contractor shall bear the expenses of the City and the escrow agent in connection with the escrow deposit made.
2. Securities or certificates of deposit to be placed in escrow shall be of a value at least equivalent to the amounts of retention to be paid to the Contractor pursuant to this section.
3. Contractor shall enter into an escrow agreement satisfactory to the City, which agreement shall be substantially similar to the form provided in California Public Contract Code section 22300.

4. The Contractor shall obtain the written consent of the surety to such agreement.

7-1.10 **FINAL PAYMENT.** Final payment will be made only after Contractor has achieved Final Completion of the Work pursuant to the provisions of Section 7-1.01, "Acceptance," of these General Conditions. Before final payment can be made, the Contractor shall have furnished the City with the following:

1. All Record Documents, catalogues, instruction sheets and information as required by the Contract Documents.
2. Conditional Waivers and Releases Upon Final Payment executed by Contractor and all Subcontractors and Suppliers, as provided by Civil Code Section 8136. Unconditional Waivers and Releases Upon Final Payment, as provided in Civil Code Section 8138, executed by Contractor and all Subcontractors and Suppliers, must be provided for all Subcontractors and Suppliers that have been paid in full.

Within thirty (30) Days of the date of the City's Acceptance of the Work, the Contractor shall prepare and submit a Final Invoice, showing the proposed total amount due the Contractor, segregated by Bid item quantities, Change Order Work, and other basis for payments; deductions made or to be made for prior payment; and amounts previously retained. Prior invoices and payments shall be subject to correction in the proposed Invoice for Final Payment. Payments to the Contractor will be made only for actual quantities of the Contract items of work constructed in accordance with the Contract Documents.

The City will review the Contractor's proposed Final Invoice and necessary changes or corrections will be forwarded to the Contractor. Within ten (10) Days thereafter, the Contractor

shall submit a revised proposed Final Invoice incorporating changes or corrections made by the City together with any new claims resulting therefrom. Upon approval by the City, the corrected proposed Final Invoice will become the approval Final Invoice.

If agreements are reached on all questions regarding the Final Invoice, the City will pay the entire sum found due on the approved application. However, the City will withhold sums sufficient to pay all unsettled claims for which stop payment notices have been filed pursuant to Section 9350, et seq. of the California Civil Code, together with the reasonable cost of any litigation thereunder.

Final payment will be made within thirty (30) Days after receipt of an approved Final Invoice and other required Submittals referenced above or within sixty (60) Days after Acceptance of the work by the City, whichever is later, provided, however, that if an approved Final Invoice has not been submitted within sixty (60) Days after Acceptance of the Work by the City, the City may elect to make payment of sums not in dispute without prejudice to the right of either the City or the Contractor in connection with such disputed sums. Notwithstanding the foregoing, if a Notice of Completion is recorded, final payment shall not be made prior to the expiration of the thirty-five (35) calendar day lien period. The start of this lien period is the date the Placer County Recorder's Office records the Notice of Completion.

The City may withhold from the Final Payment an amount not to exceed one hundred fifty percent (150%) of any amount in dispute between the City and the Contractor.

The making of Final Payment shall not operate to release the Contractor or its sureties from obligations arising under the Contract, the Contract bonds and warranties as herein provided. Specifically, the making of final payment shall not constitute a waiver and release of claims by the City arising from:

1. Unsettled or future liens;
2. Failure of the Work to comply with the requirements of the Contract Documents;
3. The terms of any warranties required by or contained in the Contract Documents;
4. The right to any insurance proceeds or the right to make any insurance or bond claims;
5. Any claims with respect to Contractor's obligations of indemnity with respect to claims asserted by third parties; or
6. Any latent deficiencies with the Work or Contractor's fraud.

7-1.11 **CLERICAL ERRORS.** Notwithstanding the provisions of Section 7-1.10 , "Final Payment," of these General Conditions, for a period of three (3) years after Acceptance of the Work, all estimates and payments made pursuant to said Section 7-1.10, are subject to correction for clerical errors in the calculations involved in the determination of quantities and payments. The Contractor and the City agree to pay to the other any sum due under the provisions of this Section 7-1.11, provided, however, if the total sum to be paid is less than $100, no such payment shall be made.

7-1.12 **WARRANTY.** Notwithstanding inspections and Acceptance by the City of Work furnished under the Contract Documents, the Contractor hereby unconditionally guarantees that all materials and equipment furnished will be of good quality and new, that the Work will be free from defects in workmanship and materials and that the Work will conform to the requirements of the Contract Documents. Work not conforming to these requirements, including substitutions not properly approved and authorized, may be considered defective.

This warranty by the Contractor is in addition to any warranties or guarantees required elsewhere in the Contract Documents. This warranty shall be in effect notwithstanding any disclaimers, or limiting or conditional terms contained in such separate warranties furnished by manufacturers or suppliers.

The Contractor hereby agrees to repair or replace any and all Work, together with any other adjacent Work which may be displaced in so doing, that may prove to be not in accordance with the requirements of the Contract or that may be defective in its workmanship or material during the greater of a period of one (1) year after Acceptance of the Work by the City or the period specified in the Special Conditions, without any expense whatsoever to the City, ordinary wear and tear and unusual abuse or neglect excepted.

The Contractor further agrees, that within ten (10) Days after being notified in writing by the Department of any Work not in accordance with the requirements of the Contract Documents or of any defects in the Work, the Contractor will commence and prosecute with due diligence all Work necessary to fulfill the terms of this warranty, and to complete such Work within a reasonable period of time. In the event Contractor fails to comply, it does hereby authorize the Department to proceed to have such Work done at the Contractor's expense and the Contractor will honor and pay the cost and charges therefore upon demand. The Department shall be entitled to all costs and expenses, including reasonable attorneys' fees, necessarily incurred upon the Contractor's refusal to honor and pay the above costs and charges.

All warranties set forth in the Contract Documents shall be deemed cumulative and not alternative or exclusive. Nothing contained in this section shall be construed to establish a period of limitation with respect to any other obligation, which Contractor has under the Contract Documents or under any separate warranty or guaranty required thereby. The establishment of a

specific warranty period relates only to the specific obligation of Contractor to correct defective Work, and it has no relationship to the time within which its obligation to comply with the Contract Documents or applicable provision of law may be sought to be enforced, nor to the time within which proceedings may be commenced to establish Contractor's liability with respect to its obligations other than specifically to correct the Work. Without limiting the foregoing, it is understood and agreed that Contractor shall remain responsible for latent defects with its work, regardless of the expiration of any warranty period set forth in the Contract Documents.

7-1.13 **WARRANTY OF TITLE.** No material, supplies, or equipment for the Work under this Contract shall be purchased subject to any chattel mortgage, security agreement, or under a conditional sale or other agreement by which an interest therein or any part thereof is retained by the seller or supplier. The Contractor warrants good title to all material, supplies, and equipment Installed or incorporated in the Work and agrees upon completion of all Work to deliver the Premises, together with all improvements and appurtenances constructed or placed thereon by it, to the City free from any claim, liens, security interest, or charges, and further agrees that neither the Contractor nor any person, firm, or corporation furnishing any materials or labor for any Work covered by this Contract shall have any right to a lien upon the Premises or any improvement or appurtenances thereon. Provided, that this shall not preclude the Contractor from Installing metering devices and other equipment of utility companies, the title of which is commonly retained by the utility company. In the event of the Installation of any such metering device or equipment, the Contractor shall advise the City as to the legal owner thereof. Nothing contained in this paragraph, however, shall defeat or impair the right of such persons furnishing materials or labor under any bond given by the Contractor for their protection or any rights under any law permitting such persons to look to funds due the Contractor in the hands of the City.

The provisions of this paragraph shall be inserted in all subcontracts and material Contracts, and notice of its provisions shall be given to all persons furnishing materials for the Work when no formal Contract is entered into for such materials.

[END OF GENERAL CONDITIONS]

SUPPLEMENTAL CONDITIONS

Project: _Citywide East Site Radio Communications _____

Scope of Supplemental Conditions

1. The Work shall be performed in accordance with the General Conditions and Department Standards, except as the General Conditions may be modified by the following additional City Standards, incorporated herein by this reference, if so indicated.

X	COMMUNITY DESIGN GUIDELINES 311 Vernon Street, Roseville, CA 95678
X	SPECIFICATIONS FOR COMMERCIAL CONSTRUCTION (ELECTRIC) 2090 Hilltop Circle, Roseville, CA 95747
	PARKS CONSTRUCTION STANDARDS 316 Vernon Street, Suite 400, Roseville, CA 95678
X	DESIGN AND CONSTRUCTION STANDARDS 311 Vernon Street, Roseville, CA 95678
X	OTHER

Above documents are available at: www.roseville.ca.us.

2. Numbering in these Supplemental Conditions conforms to that in the General Conditions. The existence of a section in these Supplemental Conditions means that the corresponding section in the General Conditions is modified in some respect. Unless otherwise specified, the modified General Condition is deleted entirely and the provisions of these Supplemental Conditions are substituted.

SECTION 1. DEFINITIONS AND TERMS

1-1.24 **DEPARTMENT.** Section 1-1.24 of the General Conditions is amended to include the following:

The Department for Contract Administration is the __Information Technology_ Department of the City of Roseville.

SECTION 2. CONTROL AND SCOPE OF THE WORK

2-1.07 **ORDER OF WORK.** Section 2-1.07 of the General Conditions is amended to include the following:

The first order of work shall be to place the order for long lead time materials and equipment including electrical materials that will be furnished by the Contractor for this project. The Contractor must place the order within 10 working days after the Project Award. Should the City have to supply the Contractor with material and/or equipment to do the work, the Contractor will be charged accordingly per agreed upon cost. The Contractor must furnish the Engineer with a statement from the equipment vendor(s) that the order for said equipment has been received and accepted by said vendor(s). Said statement must include an anticipated date of delivery of said equipment to the Contractor. Said statement must be furnished to the Engineer within 15 working days of the Project Award. Installation of telecommunication equipment must be completed within contract working days. The Contractor must pay liquidated damages per the Special Provisions of this document if the installation of telecommunication equipment cannot be completed within the above time frame.

2-1.08 **SUBMITTALS.** Section 2-1.08 of the General Conditions is amended to include the following:

The time allowed for review of each submittal is __14__ Days after receipt of the submittal by the Director.

2-1.08D **MANUALS, INSTRUCTIONS AND AFFIDAVIT.** Section 2-1.08D of the General Conditions is amended to include the following:

A. Manuals and Instructions. Provide installation instructions, and operations and maintenance manuals for the telecommunication equipment.

2-1.17 **NIGHT WORK AND NORMAL WORKING HOURS.** Section 2-1.17 of the General Conditions is amended to read:

Normal working hours at the construction site shall be between the hours of 7:00 a.m. and 4:30 p.m. Monday through Friday. The Contractor must reimburse the City at a rate of $175 per hour for the Inspector and $225 per hour for the Resident Engineer for all inspections performed outside of these hours, including designated holidays and weekends.

2-1.22 **FINAL CLEANUP.** Section 2-1.17 of the General Conditions is amended to include the following:

The Contractor must use a power washer to remove all reference markings (i.e. USA markings, striping reference points, utility reference points, etc.)

SECTION 3. CHANGES IN THE WORK

Special inspections shall be contracted and paid for through the City. Coordination of Special Inspections shall be by the Contractor.

There are no other amendments to the General Conditions.

SECTION 4. CONTROL OF MATERIALS

There are no amendments to the General Conditions.

SECTION 5. LEGAL RELATIONS AND RESPONSIBILITY

5-1.06 **SUPERINTENDENCE.** Section 5-1.06 of the General Conditions is amended to include the following:

As part of the bid package and prior to Project award, the prime contractor must have on their payroll, or be under contract with, either a consultant or subcontractor that will provide a Radio Communications Tower (RCT) Superintendent for the project and provide documentation of such agreement. The RCT Superintendent shall be present at the job site during all items relating to the East Site Radio Communications Tower. Additionally, the contractor shall submit, as part of the bid package, the RCT Superintendent's resume. At a minimum, the RCT Superintendent's resume shall include the following.

- RCT Superintendent must have a minimum of three (3) years RCT construction experience.
- RCT Superintendent must have completed at least three (3) RCT projects with a minimum height of 150 feet.
- Three (3) RCT project references, including photographs that are representative of the projects, must be included.

The City has sole discretion to approve or reject the RCT Superintendent. If the proposed RCT Superintendent is rejected, the contractor has three (3) business days to submit another RCT Superintendent for consideration by the City.

5-1.14 **AIR POLLUTION CONTROL AND ASBESTOS.** Section 5-1.14 of the General Conditions is amended to include the following:

To the best of the City's knowledge, asbestos _is not_____ present in the vicinity of the Project. Additional information shall be made available to Contractor upon request.

5-1.18 **ENVIRONMENTAL CLEARANCES**

Section 5-1.18 of the General Conditions is amended to include the following:

An Initial Study/Mitigated Negative Declaration (IS/MND) and Mitigation Monitoring and Reporting Plan (MMRP) has been adopted for the project (East Site Radio Communications Tower: Emergency and Daily Operational Services Project). Contractor shall comply with the MMRP.

5-1.19 **PERMITS AND LICENSES**

Section 5-1.19 of the General Conditions is amended to include the following:

The City has submitted Building Permit (BD23-1475) and Civil Improvement Permit (EN22-0684) for this project. The contractor shall be responsible for ensuring permits are issued prior to start of work.

5-1.26 COORDINATION AND ACCESS

Section 5-1.26 of the General Conditions is amended to include the following:

Access to the site is via the temporary construction (DOC-2023-0009872-00) and access agreement (DOC-2023-0009871-00) recorded with Placer County Recorder on the adjacent commercial property 1700 Rocky Ridge Drive (APN: 048-420-018). Contractor shall abide by all conditions outlined in the easements and as shown on the building and civil permit plans, unless otherwise agreed to by the City.

SECTION 6. PROSECUTION AND PROGRESS

6-1.04 **PROGRESS SCHEDULE.** Section 6-1.04F of the General Conditions is amended to include the following:

Progress schedules showing project completion dates more than ____0____ Days earlier than specified in Section 6-1.07 shall be rejected.

6-1.07 **TIME OF COMPLETION.** Section 6-1.07 of the General Conditions is amended to include the following:

The Contractor shall begin Work within __15___ business days after receiving a Notice to Proceed and shall diligently prosecute the Work to completion. The Work shall be completed within _180_ business days of the Notice to Proceed.

If landscaping plants require an establishment period, that period will be __30__ calendar days. Start of the establishment should be as outlined in the Specifications.

6-1.08 **LIQUIDATED DAMAGES.** Section 6-1.08 of the General Conditions is amended to include the following:

The amount of Liquidated Damages is the sum of $__3,000_____ per Day.

^

SECTION 7: ACCEPTANCE AND PAYMENT

7-1.07 **PROGRESS PAYMENTS.** Section 7-1.07 of the General Conditions is amended to include the following:

The Contractor shall submit all requests for progress payments using the forms included in Appendix C:

Form CC 1: Progress Payment Request - This form is to be completed and signed by the Contractor and attached as a cover sheet to each request for payment. This form will be mandatory on all contract payment requests.

Form CC2: Progress Payment Request (Detail) - This form may be used by the Contractor to provide the detail required to verify the payment quantities. (City will accept the Contractor's form if it provides the required information.)

Form CC3: Quantity Changes Verification Form - This form is required before any payment can be made based on actual quantities exceeding estimated quantities. At the conclusion of the project, the City will issue a "Balancing Change Order" incorporating all quantity increases and decreases in the contract item of work.

Form CC4: Final Release Form - This form must accompany all requests for final payment.

[END OF SUPPLEMENTAL CONDITIONS]

DRAW

TEXT OF AB 626

Assembly Bill No. 626

CHAPTER 810

An act to add and repeal Section 9204 of the Public Contract Code, relating to public contracts.

[Approved by Governor September 29, 2016. Filed with Secretary of State September 29, 2016.]

LEGISLATIVE COUNSEL'S DIGEST

AB 626, Chiu. Public contracts: claim resolution.

Existing law prescribes various requirements regarding the formation, content, and enforcement of state and local public contracts. Existing law applicable to state public contracts generally requires that the resolution of claims related to those contracts be subject to arbitration. Existing law applicable to local agency contracts prescribes a process for the resolution of claims related to those contracts of $375,000 or less.

This bill would establish, for contracts entered into on or after January 1, 2017, a claim resolution process applicable to any claim by a contractor in connection with a public works project. The bill would define a claim as a separate demand by the contractor for one or more of the following: a time extension for relief from damages or penalties for delay, payment of money or damages arising from work done pursuant to the contract for a public work, or payment of an amount disputed by the public entity, as specified.

This bill would require a public entity, defined to exclude certain state entities, upon receipt of a claim sent by registered or certified mail, to review it and, within 45 days, provide a written statement identifying the disputed and undisputed portions of the claim. The bill would authorize the 45-day period to be extended by mutual agreement. The bill would require any payment due on an undisputed portion of the claim to be processed within 60 days, as specified. The bill would require that the claim be deemed rejected in its entirety if the public entity fails to issue the written statement.

This bill would authorize, if the claimant disputes the public entity's written response or if the public entity fails to respond to a claim within the time prescribed, the claimant to demand to meet and confer for settlement of the issues in dispute. The bill would require any disputed portion of the claim that remains in dispute after the meet and confer conference to be subject to nonbinding mediation, as specified. The bill would provide that unpaid claim amounts accrue interest at 7% per annum. The bill would prescribe a procedure by which a subcontractor or lower tier contractor may make a claim through the contractor.

This bill would require the text of these provisions, or a summary, to be set forth in the plans or specifications for any public work which may give rise to a claim. The bill would specify that a waiver of these rights is void and contrary to public policy, except as specified. The bill would also specify that it does not impose liability on a public entity that makes loans or grants available through a competitive application process, for the failure of an awardee to meet its contractual obligations.

By increasing the duties of local agencies and officials, this bill would impose a state-mandated local program.

This bill would, on January 1, 2020, repeal the provision establishing the claim resolution process.

This bill would specify that these provisions constitute a matter of statewide concern.

The California Constitution requires the state to reimburse local agencies and school districts for certain costs mandated by the state. Statutory provisions establish procedures for making that reimbursement.

This bill would provide that, if the Commission on State Mandates determines that the bill contains costs mandated by the state, reimbursement for those costs shall be made pursuant to these statutory provisions.

The people of the State of California do enact as follows:

SECTION 1. Section 9204 is added to the Public Contract Code, to read:

9204. (a) The Legislature finds and declares that it is in the best interests of the state and its citizens to ensure that all construction business performed on a public works project in the state that is complete and not in dispute is paid in full and in a timely manner.

(b) Notwithstanding any other law, including, but not limited to, Article 7.1 (commencing with Section 10240) of Chapter 1 of Part 2, Chapter 10 (commencing with Section 19100) of Part 2, and Article 1.5 (commencing with Section 20104) of Chapter 1 of Part 3, this section shall apply to any claim by a contractor in connection with a public works project.

(c) For purposes of this section:

(1) "Claim" means a separate demand by a contractor sent by registered mail or certified mail with return receipt requested, for one or more of the following:

(A) A time extension, including, without limitation, for relief from damages or penalties for delay assessed by a public entity under a contract for a public works project.

(B) Payment by the public entity of money or damages arising from work done by, or on behalf of, the contractor pursuant to the contract for a public works project and payment for which is not otherwise expressly provided or to which the claimant is not otherwise entitled.

(C) Payment of an amount that is disputed by the public entity.

(2) "Contractor" means any type of contractor within the meaning of Chapter 9 (commencing with Section 7000) of Division 3 of the Business and Professions Code who has entered into a direct contract with a public entity for a public works project.

(3) (A) "Public entity" means, without limitation, except as provided in subparagraph (B), a state agency, department, office, division, bureau, board, or commission, the California State University, the University of California, a city, including a charter city, county, including a charter county, city and county, including a charter city and county, district, special district, public authority, political subdivision, public corporation, or nonprofit transit corporation wholly owned by a public agency and formed to carry out the purposes of the public agency.

(B) "Public entity" shall not include the following:

(i) The Department of Water Resources as to any project under the jurisdiction of that department.

(ii) The Department of Transportation as to any project under the jurisdiction of that department.

(iii) The Department of Parks and Recreation as to any project under the jurisdiction of that department.

(iv) The Department of Corrections and Rehabilitation with respect to any project under its jurisdiction pursuant to Chapter 11 (commencing with Section 7000) of Title 7 of Part 3 of the Penal Code.

(v) The Military Department as to any project under the jurisdiction of that department.

(vi) The Department of General Services as to all other projects.

(vii) The High-Speed Rail Authority.

(4) "Public works project" means the erection, construction, alteration, repair, or improvement of any public structure, building, road, or other public improvement of any kind.

(5) "Subcontractor" means any type of contractor within the meaning of Chapter 9 (commencing with Section 7000) of Division 3 of the Business and Professions Code who either is in direct contract with a contractor or is a lower tier subcontractor.

(d) (1) (A) Upon receipt of a claim pursuant to this section, the public entity to which the claim applies shall conduct a reasonable review of the claim and, within a period not to exceed 45 days, shall provide the claimant a written statement identifying what portion of the claim is disputed and what portion is undisputed. Upon receipt of a claim, a public entity and a contractor may, by mutual agreement, extend the time period provided in this subdivision.

(B) The claimant shall furnish reasonable documentation to support the claim.

(C) If the public entity needs approval from its governing body to provide the claimant a written statement identifying the disputed portion and the undisputed portion of the claim, and the governing body does not meet within the 45 days or within the mutually agreed to extension of time following receipt of a claim sent by registered mail or certified mail, return receipt requested, the public entity shall have up to three days following the next duly publicly noticed meeting of the governing body after the 45-day period, or extension, expires to provide the claimant a written statement identifying the disputed portion and the undisputed portion.

(D) Any payment due on an undisputed portion of the claim shall be processed and made within 60 days after the public entity issues its written statement. If the public entity fails to issue a written statement, paragraph (3) shall apply.

(2) (A) If the claimant disputes the public entity's written response, or if the public entity fails to respond to a claim issued pursuant to this section within the time prescribed, the claimant may demand in writing an informal conference to meet and confer for settlement of the issues in dispute. Upon receipt of a demand in writing sent by registered mail or certified mail, return receipt requested, the public entity shall schedule a meet and confer conference within 30 days for settlement of the dispute.

(B) Within 10 business days following the conclusion of the meet and confer conference, if the claim or any portion of the claim remains in dispute, the public entity shall provide the claimant a written statement identifying the portion of the claim that remains in dispute and the portion that is undisputed. Any payment due on an undisputed portion of the claim shall be processed and made within 60 days after the public entity issues its written statement. Any disputed portion of the claim, as identified by the contractor in writing, shall be submitted to nonbinding mediation, with the public entity and the claimant sharing the associated costs equally. The public entity and claimant shall mutually agree to a mediator within 10 business days after the disputed portion of the claim has been identified in writing. If the parties cannot agree upon a mediator, each party shall select a mediator and those mediators shall select a qualified neutral third party to mediate with regard to the disputed portion of the claim. Each

party shall bear the fees and costs charged by its respective mediator in connection with the selection of the neutral mediator. If mediation is unsuccessful, the parts of the claim remaining in dispute shall be subject to applicable procedures outside this section.

(C) For purposes of this section, mediation includes any nonbinding process, including, but not limited to, neutral evaluation or a dispute review board, in which an independent third party or board assists the parties in dispute resolution through negotiation or by issuance of an evaluation. Any mediation utilized shall conform to the timeframes in this section.

(D) Unless otherwise agreed to by the public entity and the contractor in writing, the mediation conducted pursuant to this section shall excuse any further obligation under Section 20104.4 to mediate after litigation has been commenced.

(E) This section does not preclude a public entity from requiring arbitration of disputes under private arbitration or the Public Works Contract Arbitration Program, if mediation under this section does not resolve the parties' dispute.

(3) Failure by the public entity to respond to a claim from a contractor within the time periods described in this subdivision or to otherwise meet the time requirements of this section shall result in the claim being deemed rejected in its entirety. A claim that is denied by reason of the public entity's failure to have responded to a claim, or its failure to otherwise meet the time requirements of this section, shall not constitute an adverse finding with regard to the merits of the claim or the responsibility or qualifications of the claimant.

(4) Amounts not paid in a timely manner as required by this section shall bear interest at 7 percent per annum.

(5) If a subcontractor or a lower tier subcontractor lacks legal standing to assert a claim against a public entity because privity of contract does not exist, the contractor may present to the public entity a claim on behalf of a subcontractor or lower tier subcontractor. A subcontractor may request in writing, either on his or her own behalf or on behalf of a lower tier subcontractor, that the contractor present a claim for work which was performed by the subcontractor or by a lower tier subcontractor on behalf of the subcontractor. The subcontractor requesting that the claim be presented to the public entity shall furnish reasonable documentation to support the claim. Within 45 days of receipt of this written request, the contractor shall notify the subcontractor in writing as to whether the contractor presented the claim to the public entity and, if the original contractor did not present the claim, provide the subcontractor with a statement of the reasons for not having done so.

(e) The text of this section or a summary of it shall be set forth in the plans or specifications for any public works project that may give rise to a claim under this section.

(f) A waiver of the rights granted by this section is void and contrary to public policy, provided, however, that (1) upon receipt of a claim, the parties may mutually agree to waive, in writing, mediation and proceed directly to the commencement of a civil action or binding arbitration, as applicable; and (2) a public entity may prescribe reasonable change order, claim, and dispute resolution procedures and requirements in addition to the provisions of this section, so long as the contractual provisions do not conflict with or otherwise impair the timeframes and procedures set forth in this section.

(g) This section applies to contracts entered into on or after January 1, 2017.

(h) Nothing in this section shall impose liability upon a public entity that makes loans or grants available through a competitive application process, for the failure of an awardee to meet its contractual obligations.

(i) This section shall remain in effect only until January 1, 2020, and as of that date is

repealed, unless a later enacted statute, that is enacted before January 1, 2020, deletes or extends that date.

SECTION 2.
The Legislature finds and declares that it is of statewide concern to require a charter city, charter county, or charter city and county to follow a prescribed claims resolution process to ensure there are uniform and equitable procurement practices.

SECTION 3.
If the Commission on State Mandates determines that this act contains costs mandated by the state, reimbursement to local agencies and school districts for those costs shall be made pursuant to Part 7 (commencing with Section 17500) of Division 4 of Title 2 of the Government Code.

SPECIFICATIONS

East Communications Site
Construction RFQ Components

The following are site components the City will include in the Construction RFQ. All components spacing, orientation and cabling to follows construction drawing specs.

- **Tower**
  - Valmont 72-S940-180' tower and foundation
    - 20-foot center to center distance between legs
    - Triangular construction
    - Angular support bracing
    - Hot dipped galvanized tower assembly hardware
    - Vertical waveguide ladder on outside of one tower face
    - Inside climbing ladder in one tower corner
    - Safety climb cable system for 180' tower
    - Safety climb cable sleeve
    - 5/8" x 4' galvanized lightning rod
    - (6) dish mounts
    - (10) 31-B3100 3-foot universal standoff mounts with antenna mounting pipe
    - Anchor bolts and layout templates
  - Receive, unload and construct tower
  - R56 grounding or equivalent
  - Wave guide ("ice bridge") between tower and shelter for cabling with proper grounding

- **Shelter**
  - VFP TT1000 12' x 16' lightweight metal shelter
  - General construction:
    - The exterior roof of the shelter is constructed of sealed galvanized steel panels and a standing seam metal roof
    - Skid assembly will be hot dipped galvanized featuring a concrete sub floor
    - The walls will be insulated to R-13
    - The ceiling will be insulated to R-19
    - The floor will be insulated to R-11 with spray foam insulation
    - The interior walls and ceiling will be sheathed with 3/8" OSB backed white FRP board
    - One (1) 36" wide x 84" high insulated steel exterior door, with tamper-proof hinges, passage style lever handle, deadbolt lockset, hydraulic door closer and fiberglass weather hood
    - Exterior wall color: Tan
  - Grounding:
    - All grounding to meet or exceed Motorola R56 standards
    - One (1) interior perimeter R-56 ground system consisting of a 2 AWG stranded non-jacketed copper cable, approximately 6 inches below the ceiling

        - One (1) equipment rack ground cable run along the cable ladder; 2 AWG green jacketed. VFP will ground the four (4) Chatsworth racks per R-65
        - One (1) internal three tier slotted trapeze assembly mounted on the internal side of the 16-port waveguide
        - One (1) interior ground bar located below the trapeze assembly on the inside shelter wall.
        - Exterior grounding shall be provided by others
    - Power distribution:
        - One (1) 400 Amp, 10,000 AIC, 120/240 VAC, single phase, 60 Hz, 40 space main breaker, snap-in utility power distribution panel, in a NEMA 1 surface mount enclosure
        - Circuit breakers for all VFP installed equipment and customer loads as specified
        - All surface mounted EMT conduit shall have compression fittings
        - One (1) shelter wall penetration to serve as utility power service entry
        - Five (5) 20 Amp specification grade duplex receptacles
        - One (1) 20 Amp specification grade exterior duplex GFI receptacles
    - Automatic transfer switch (ATS):
        - Generac TXS
        - Application: Utility to Genset
            - Connected to generator and UPS
            - Enable transfer from utility to UPS during unplanned event
            - Enable manual transfer capability for planned testing
        - Ampere Rating: 400
        - Voltage: 240 Volt
        - Phase: single
        - Neutral kit: Included
        - Enclosure: NEMA 1
        - Programmable alarm relay board
    - Lighting:
        - Five (5) four-foot, surface mounted LED light fixtures and switch
        - One (1) LED exterior door light with photocell control with switch override
        - One (1) emergency light with exit sign and battery backup
    - HVAC:
        - Two (2) 3-ton (36,000 Btu/hr. ea.), 240-volt, single phase, 11 EER wall mounted Heat Pumps, with low ambient and compressor anti cycle controls, integral 5 kW resistance heat strips and washable dust filters
            - Bard WL-361-AOZBPXXXJ, or equivalent
        - Redundant lead/lag controls allowing approximately equal operating time on each air conditioning unit
            - Bard MC4002-B, or equivalent
        - One (1) Honeywell H600A humidistat wired to the controller
    - Accessories:
        - One (1) 16-port/waveguide entry panel with 3" sleeves and protective blank covers
        - One (1) 36” x 48” x 3/4" equipment mounting board

        - 24" wide cable ladder/tray to provide raceways from cable entry to all (4) racks
        - Four (4) seven-foot (7') Chatsworth equipment racks
            - VFP will bolt, ground, and brace these equipment racks for shipment.
            - All equipment integration in the racks will be supplied and installed by others
        - One (1) portable 10-pound CO2 fire extinguisher
        - One (1) handheld emergency eye wash station
        - One (1) first aid kit
        - One (1) service manual
        - If requested, VFP will provide three (3) sets of shelter drawings with each shelter unit order. Typical foundation drawings based upon normal soil conditions are available to support calculations for recommended shelter tie down locations. No other foundation drawings are offered in the proposed shelter price. Additional foundation drawings can be provided and will be negotiated separately
        - All wiring will be installed in surface mounted conduit if specified and will be in full compliance with ANSI/NFPA-70
        - Shelters will be built according to the latest IBC edition and state requirements of which the shelter is residing, local and county codes are not applicable unless otherwise stated
    - Alarms:
        - All alarms will be tagged and terminated on three (3) punch blocks:
            - One (1) line voltage smoke detector
            - One (1) intrusion alarm switch with form "C" contacts rated .1 Amps at 28 VDC
            - One (1) high temperature alarm wired in controller
            - One (1) low temperature alarm wired in controller
            - One (1) utility power failure alarm
            - ATS alarms: Normal, Standby, Remote Start
            - HVAC failure alarms
    - Receive, unload and install shelter

- **Generator**
    - Generator and foundation
    - 70kW Generac
        - Compatible with ATS
    - Receive, unload and install generator
    - Connect to fuel tank and ATS for seamless transition to/from utility power and UPS power
    - R56 grounding or equivalent

- **Fuel tank**
    - Fuel tank and foundation
    - 500-gallon propane tank

    - Gauge to measure fuel capacity
    - Receive, unload and install fuel tank
    - Connect to generator
    - R56 grounding or equivalent

- **Grading, driveway, fencing, etc.**
    - Fencing R56 grounding or equivalent
    - Concrete driveway

PLANS AND DRAWINGS

PROJECT NUMBER: EN22-0684

DESIGN CRITERIA

1. ALL WORKS SHALL BE IN ACCORDANCE WITH THE CALIFORNIA BUILDING CODE (CBC 2022 EDITION)
2. CONCRETE SHALL HAVE MINIMUM ULTIMATE COMPRESSIVE STRENGTH, f'c = 3000 PSI
3. REIFORCING STEEL SHALL HAVE MINIMUM YIELD STRENGTH, Fy = 40,000 PSI
4. ALL REINFORCING STEEL SPLICES SHALL BE 48 BAR DIAMETER MINIMUM
5. STRUCTURAL STEEL TUBE SHALL HAVE MINIMUM YIELD STRENGTH, Fy = 46,000 PSI
6. STEEL PLATES SHALL BE A36
7. ANCHOR BOLTS SHALL BE A325
8. GEOTECHNICAL REPORT BY: **BLACKBURN CONSULTING** DATED: JULY 1, 2022
9. WIND LOAD: BASIC WIND VELOCITY, v = 110 MPH EXPOSURE "C"
10. SEISMIC DESIGN

SEISMIC IMPORTANCE FACTOR	Ip = 1.5
OCCUPANCY CATEGORY	III
SITE CLASS	D (DEFAULT)
SPECTRAL RESPONSE COEFFICIENT	Sds = 0.419 g
RESPONSE MODIFICATION FACTOR	Rp = 3
COMPONENT MODIFICATION FACTOR	ap = 1.0

NOTE:

CONRAD L. ALFARO, P.E. CONSULTING ENGINEER IS NOT RESPONSIBLE FOR THE DESIGN OF THE 180 FEET SELF SUPPORTING COMMUNICATION TOWER AND ITS FOUNDATION, IT IS NOT INCLUDED IN THIS DESIGN CALCULATION. IT WILL BE DESIGN BY OTHERS.

NOTE:
PRIOR TO COMMENCEMENT OF GRADING OPERATIONS, THE CONTRACTOR SHALL IDENTIFY THE SITE WHERE THE EXCESS/BORROW EARTHEN MATERIAL SHALL BE IMPORTED/DEPOSITED. IF THE BORROW/DEPOSIT SITE IS WITHIN THE CITY OF ROSEVILLE, THE CONTRACTOR SHALL PRODUCE A REPORT ISSUED BY A GEOTECHNICAL ENGINEER TO VERIFY THAT THE EXPORTED MATERIALS ARE SUITABLE FOR THE INTENDED FILL, AND SHALL SHOW PROOF OF ALL APPROVED GRADING PLANS. HAUL ROUTES TO BE USED SHALL BE SPECIFIED.

NOTE:
PRIOR TO COMMENCEMENT OF GRADING ACTIVITIES, THE CONTRACTOR SHALL HAVE THE EXISTING DRY UTILITIES POT-HOLED FOR VERIFICATION OF LOCATION AND DEPTH. AT SUCH TIME, POT-HOLE DATA SHALL BE PROVIDED TO THE ENGINEER FOR DETERMINATION OF ADEQUATE CLEARANCE AND SEPARATION.

CITY OF ROSEVILLE
CALIFORNIA

STRAUCH DRIVE

City of Roseville Communications Installation

2001 Strauch Drive
Roseville, California 95661

NOTE:
IN ACCORDANCE WITH THE CITY'S NOISE ORDINANCE, THE HOURS OF PROJECT CONSTRUCTION SHALL BE LIMITED TO THE FOLLOWING: 7:00 A.M. TO 7:00 p.m. (MONDAY THROUGH FRIDAY) 8:00 A.M. TO 8:00 P.M. (SATURDAY, SUNDAY, AND HOLIDAYS).

PLEASE NOTE:
ALL IMPROVEMENTS WHICH FALL UNDER THE PURVIEW OF THE CBC SHALL REQUIRE A SEPARATE BUILDING PERMIT. PLEASE CONTACT THE CITY OF ROSEVILLE BUILDING DEPARTMENT FOR FURTHER INFORMATION.

PLEASE NOTE:
DEFERRED REVIEW AND APPROVAL ITEMS FOR THIS PROJECT:
* SELF SUPPORTING TOWER AND TOWER FOUNDATION
* PREFABRICATED EQUIPMENT SHELTER

L.D. STROBEL CO. INC.
DESIGN / CONSTRUCTION
WIRELESS COMMUNICATIONS
1022 SHARY CIRCLE, SUITE 9, CONCORD, CA. 94518
PHONE: 925-686-3241 FAX: 925-686-3350

REGISTERED PROFESSIONAL ENGINEER
CONRAD L. ALFARO
No C28998
EXPIRES 3-31-25
CIVIL
STATE OF CALIFORNIA

REVISIONS

NO.	DATE	DESCRIPTION
1	2/8/22	90% ZD
2	6/23/22	100% ZD/CD
3	7/25/22	100% ZD/CD Rev A
4	7/29/22	100% ZD/CD Rev B
5	8/20/23	100% ZD/CD FINAL
6	9/25/23	100% ZD/CD FINAL

SITE ADDRESS:
2001 STRAUCH DRIVE
ROSEVILLE, CA 95661
PLACER COUNTY
APN: 048-260-049

CITY OF ROSEVILLE
INFORMATION TECHNOLOGY
316 VERNON ST SUITE 300
ROSEVILLE, CA 95678

PROPOSED EQUIPMENT INSTALLATION
STRAUCH DRIVE

CITY OF ROSEVILLE
CALIFORNIA

DRAWN: jjg | DATE: 10/16/23
FILE: 9276-T1
SHEET NO. T-1

LOCATION MAP

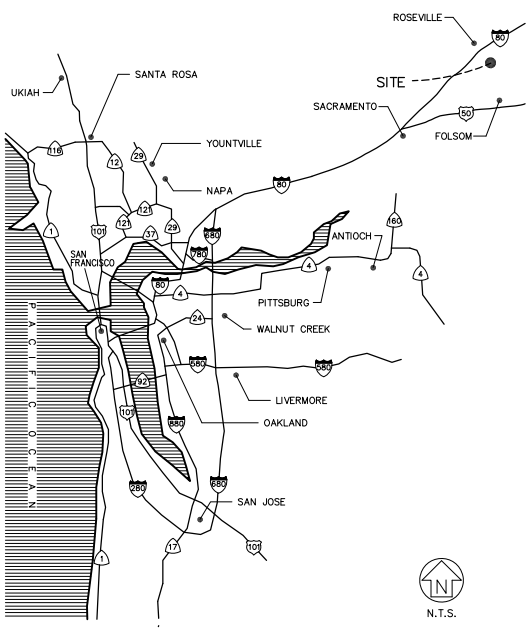

N.T.S.

VICINITY MAP

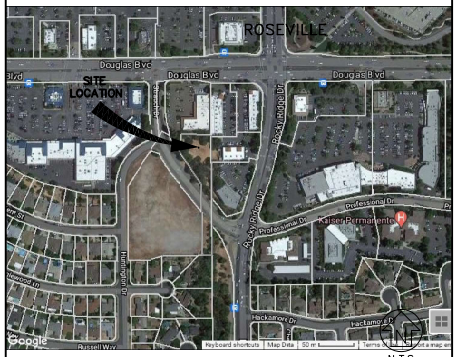

N.T.S.

CODE COMPLIANCE

ALL WORK AND MATERIALS SHALL BE PERFORMED AND INSTALLED IN COMPLIANCE WITH THE CURRENT EDITIONS OF THE FOLLOWING CODES AS ADOPTED BY THE LOCAL GOVERNING AUTHORITIES. NOTHING IN THESE PLANS IS TO BE CONSTRUED TO PERMIT WORK NOT CONFORMING TO THESE CODES.

1. 2022 CALIFORNIA ADMINISTRATIVE CODE (CAC)
2. 2022 CALIFORNIA BUILDING CODE (CBC)
3. 2022 CALIFORNIA MECHANICAL CODE (CMC)
4. 2022 CALIFORNIA PLUMBING CODE (CPC)
5. 2022 CALIFORNIA ELECTRIC CODE (CEC)
6. 2022 CALIFORNIA FIRE CODE (CFC)
7. COUNTY ORDINANCES

ACCESSIBILITY REQUIREMENTS:
FACILITY IS UNMANNED AND NOT FOR HUMAN HABITATION. HANDICAPPED ACCESS REQUIREMENTS ARE NOT REQUIRED IN ACCORDANCE WITH THE 2022 CALIFORNIA BUILDING CODE, TITLE 24, PART 2, VOLUME 1, CHAPTER 11B, SECTION 11B-203.5 (EXCEPTIONS).

CALL BEFORE YOU DIG
Underground Service Alert of Central/Northern California
CALL: TOLL FREE 1-800-227-2600
TWO WORKING DAYS BEFORE YOU DIG

PROJECT DATA

SITE OWNER:
CITY OF ROSEVILLE
311 VERNON STREET
ROSEVILLE, CA 95678
CONTACT: KARL GROVER
(916) 774-5145

APPLICANT:
CITY OF ROSEVILLE
INFORMATION TECHNOLOGY
316 VERNON ST., SUITE 300
ROSEVILLE, CA 95678
CONTACT: GINA McCOLL
(916) 774-5452

PROPERTY OWNER:
CITY OF ROSEVILLE
211 VERNON STREET
ROSEVILLE, CA 95781
CONTACT: GINA McCOLL
(916) 774-5452

ANTENNA SITE DESIGN:
L.D. STROBEL CO. INC.
1022 SHARY CIR. SUITE 9 CONCORD, CA 94518
CONTACT: JEFF GIESE
(925) 686-3241

STRUCTURAL ENGINEERING:
CONRAD ALFARO P.E.
34583 CALCUTTA DR.
FREMONT, CA 94555
CONTACT: CONRAD ALFARO
(510) 406-5138

ELECTRICAL ENGINEERING:
RANDALL LAMB ASSOCIATES
1700 MONTGOMERY STREET SUITE 250
SAN FRANCISCO, CA 94111
CONTACT: RUDY ZEPEDA
(415) 760-6575

SHEET INDEX

T-1	COVER SHEET: PROJECT TITLE, MAPS, AND INFORMATION
G-1	GENERAL NOTES AND INFORMATION
G-2	GENERAL NOTES AND INFORMATION
G-3	CITY OF ROSEVILLE – STANDARD NOTES
G-4	CITY OF ROSEVILLE – STANDARD NOTES
G-5	CITY OF ROSEVILLE – STANDARD NOTES
G-6	CITY OF ROSEVILLE – STANDARD NOTES
D-1	DEMOLITION PLAN
C-1	SURVEY
C-2	SURVEY
A-1	OVERALL SITE PLAN
A-1.1	ENLARGED SITE PLAN
A-1.2	COMPOUND SITE PLAN
A-2	ELEVATIONS
A-3	ELEVATIONS
A-4	NOT USED
A-5	FIBER ROUTE
A-6	WAVEGUIDE BRIDGE DETAILS
A-7	PROPANE TANK DETAILS
A-8	FENCE AND H-FRAME
A-9	EQUIPMENT SHELTER FOUNDATION
A-10	ACCESS ROAD DESIGN, GENERATOR AND PROPANE TANK FOUNDATIONS
A-11	GENERATOR SPECIFICATIONS
E-1	ELECTRICAL
E-2	ELECTRICAL
E-3	ELECTRICAL
E-4	ELECTRICAL
E-5	ELECTRICAL

PROJECT DESCRIPTION

INSTALLATION OF A WIRELESS COMMUNICATIONS FACILITY, INCLUDING THE INSTALLATION OF A NEW 12'x16' COMMUNICATION SHELTER, A 60KW STANDBY PROPANE GENERATOR SET (U.L. 142) 1000 GAL PROPANE TANK AND A 180' HIGH SELF SUPPORTING COMMUNICATION TOWER. ALSO, AN H-FRAME SUPPORT FOR METERS, DISCONNECTS, ETC., ALL WITHIN A FENCED ENCLOSURE OF 2,482.64 SQUARE FEET AREA.

BUILDING/SITE DATA LEGEND

A.P.N.:	048-260-049
ZONING:	PD7 (PLANNED DEVELOPMENT)
LATITUDE:	38°-44'-35.63" N*
LONGITUDE:	121° 15'-15.58" W*
ELEVATION:	184'
PROJECT AREA:	2,482.64 SQUARE FEET
NUMBER OF STORIES:	1
NUMBER OF BASEMENTS:	0

* SOURCE: GOOGLE EARTH

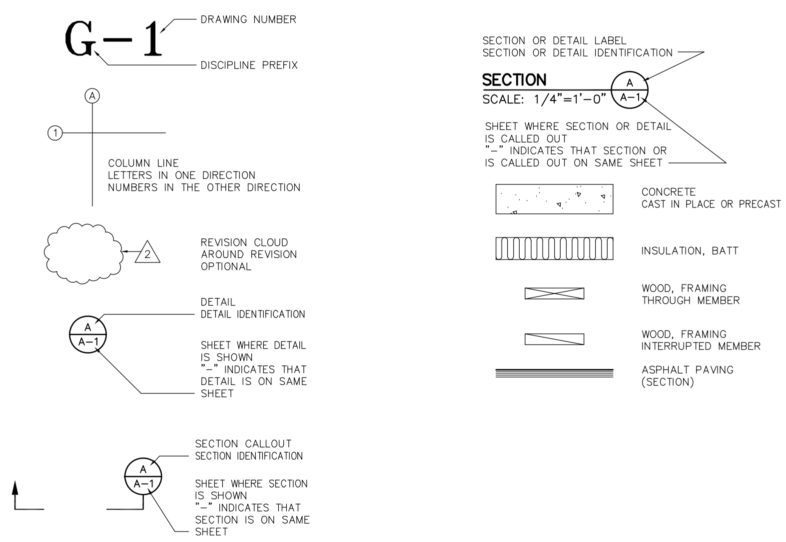

SYMBOLS LEGEND

SCALE: N/A

ABREVIATIONS AND GENERAL NOTES

SCALE: N/A

&	AND
@	AT
℄	CENTERLINE
⅊	PLATE
AB	ANCHOR BOLT
AC	AIR CONDITIONING
ACOUS	ACOUSTICAL
ADJ	ADJUSTABLE
AFF	ABOVE FINISHED FLOOR
AGL	ABOVE GRADE LEVEL
ALT	ALTERNATE
ALUM	ALUMINUM
ANOD	ANODIZED
ATS	ATOMATIC TRANSFER SWITCH
BD	BOARD
BGL	BELOW GRADE LEVEL
BLDG	BUILDING
BLK	BLOCK
BLKG	BLOCKING
BM	BEAM
CAB	CABINET
CAT	CATALOG
CLG	CEILING
CLKG	CAULKING
CLO	CLOSET
CLR	CLEAR
CMU	CONCRETE MASONRY UNIT
CNTR	COUNTER
CO	CONDUIT ONLY (INCLUDE PULL ROPE)
COL	COLUMN
COMM	COMMUNICATIONS
CONC	CONCRETE
CONN	CONNECTION
CONT	CONTINUOUS
CTR	CENTER
DET	DETAIL
DIA	DIAMETER
DIM	DIMENSION
DR	DOOR
DWR	DRAWER
E	EAST
(E)	EXISTING
EA	EACH
EGB	EXTERNAL GROUND BAR
ELEC	ELECTRICAL
ELEV	ELEVATOR/ELEVATION
EQ	EQUAL
EQUIP	EQUIPMENT
ES	EACH SIDE
E.W.	EACH WAY
EXT	EXTERIOR
FDN	FOUNDATION
FF	FINISH FACE
FIN	FINISH
FIXT	FIXTURE
FLR	FLOOR
FOF	FACE OF FINISH
FRP	FIBERGLASS
FT	FOOT OR FEET
F.T.	FUEL TANK
GA	GAUGE
GALV	GALVANIZED
GC	GENERAL CONTRACTOR
GL	GLASS
GR	GRADE
GYP	GYPSUM
GEN	GENERATOR
HC	HOLLOW CORE
HD GALV	HOT DIPPED ZINC PLATED
HDWD	HARDWOOD
HDWE	HARDWARE
HM	HOLLOW METAL
HORIZ	HORIZONTAL
HT	HEIGHT
HVAC	HEATING, VENTILATING & AIR CONDITIONING
INC	INCANDESCENT
INT	INTERIOR
J BOX	JUNCTION BOX
JT	JOINT
LAM	LAMINATE
LT	LIGHT
MAT	MATERIAL
MAX	MAXIMUM
MECH	MECHANICAL
MET	METAL
MFR	MANUFACTURER
MGB	MASTER GROUND BAR
MIN	MINIMUM
MISC	MISCELLANEOUS
MO	MASONRY OPENING
MTD	MOUNTED
MUL	MULLION
(N)	NEW
N	NORTH
(NA)	NOT APPLICABLE
NIC	NOT IN CONTRACT
NOM	NOMINAL
NTS	NOT TO SCALE
OC	ON CENTER
OD	OUTSIDE DIAMETER
OF-CI	OWNER FURNISHED-CONTRACTOR INSTALLED
OFNIC	OWNER FURNISHED-NOT IN CONTRACT
OPNG	OPENING
OPP	OPPOSITE
(P)	PROPOSED
P	PAINT
PART	PARTITION
PBX	TELEPHONE SWITCH BOARD
PD	PRODUCT OF COMBUSTION DETECTOR
PL	PLATE
PL LAM	PLASTIC LAMINATE
PLYWD	PLYWOOD
PR	PAIR
PRE-FAB	PREFABRICATED
PSI	POUNDS PER SQUARE INCH
PT	POINT
PTD	PAINTED
QTY	QUANTITY
(R)	RELOCATED
RAD	RADIUS
REFR	REFRIGERATOR
REQ	REQUIRED
RESIL	RESILIENT
RM	ROOM
RO	ROUGH OPENING
RUB	RUBBER
S	SOUTH
SC	SOLID CORE
SED	SEE ELECTRICAL DRAWING
SHT	SHEET
SIM	SIMILAR
SPEC	SPECIFICATION
SQ	SQUARE
SSD	SEE STRUCTURAL DRAWING
SST	STAINLESS STEEL
STD	STANDARD
STL	STEEL
STOR	STORAGE
STRL	STRUCTURAL
SUSP	SUSPENDED
T&B	TOP AND BOTTOM
TEL	TELEPHONE
THRESH	THRESHOLD
THK	THICK, THICKNESS
TOC	TOP OF CONCRETE
TS	TUBE STEEL
TSB	TOP SET BASE
TW	TOP OF WALL
TYP	TYPICAL
UNF	UNFINISHED
UON	UNLESS OTHERWISE NOTED
VB	VAPOR BARRIER
VENT	VENTILATION
VERT	VERTICAL
VIF	VERIFY IN FIELD
W	WEST
W/	WITH
WD	WOOD
W/O	WITHOUT
WT	WEIGHT

DIVISION 1 – GENERAL REQUIREMENTS

A. GENERAL CONDITIONS: THE REQUIREMENTS OF THE GENERAL CONDITIONS OF THE CONTRACT FOR CONSTRUCTION (AIA DOCUMENT A201-1987) APPLY TO THE EXECUTION OF THIS PROJECT IN ITS ENTIRETY.

B. OFCI REFERS TO ITEMS THAT ARE OWNER FURNISHED AND CONTRACTOR INSTALLED.

C. NIC REFERS TO ITEMS THAT ARE NOT IN CONTRACT.

D. DRAWINGS ARE NOT TO BE SCALED. WRITTEN DIMENSIONS TAKE PRECEDENCE. THIS SET OF PLANS ARE INTENDED TO BE USED FOR DIAGRAMMATIC PURPOSES ONLY, UNLESS NOTED OTHERWISE. THE CONTRACTOR'S SCOPE OF WORK SHALL INCLUDE FURNISHING ALL MATERIALS, EQUIPMENT, LABOR AND ANYTHING ELSE DEEMED NECESSARY TO COMPLETE INSTALLATIONS AS DESCRIBED HEREIN.

E. ALL WORK PERFORMED AND MATERIALS INSTALLED SHALL BE IN STRICT ACCORDANCE WITH ALL APPLICABLE CODES, REGULATIONS AND ORDINANCES. CONTRACTOR SHALL GIVE ALL NOTICES AND COMPLY WITH ALL LAWS, ORDINANCES, RULES, REGULATIONS AND LAWFUL ORDERS OF ANY PUBLIC AUTHORITY REGARDING THE PERFORMANCE OF THE WORK. MECHANICAL AND ELECTRICAL SYSTEMS SHALL BE INSTALLED IN ACCORDANCE WITH ALL APPLICABLE MUNICIPAL AND UTILITY COMPANY SPECIFICATIONS AND LOCAL AND STATE JURISDICTIONAL CODES, ORDINANCES AND APPLICABLE REGULATIONS.

F. THE ENGINEER HAS MADE EVERY EFFORT TO DETAIL THE COMPLETE SCOPE OF WORK IN THE CONSTRUCTION AND CONTRACT DOCUMENTS. CONTRACTORS ARE NEVERTHELESS CAUTIONED THAT MINOR OMISSIONS OR ERRORS IN THE DRAWINGS OR SPECIFICATIONS SHALL NOT EXCUSE SAID CONTRACTOR FROM COMPLETING THE PROJECT AND IMPROVEMENTS IN ACCORDANCE WITH THE INTENT OF THE DOCUMENTS. THE CONTRACTOR SHALL BEAR THE RESPONSIBILITY OF NOTIFYING THE ENGINEER IN WRITING OF ANY CONFLICTS, ERRORS OR OMISSIONS PRIOR TO THE CONTRACTOR'S PROPOSAL. IN THE EVENT OF DISCREPANCIES THE CONTRACTOR SHALL PRICE THE MORE EXPENSIVE OR EXTENSIVE WORK UNLESS DIRECTED OTHERWISE.

G. ALL DRAWINGS ARE INTERRELATED. IN PERFORMANCE OF THE WORK, THE CONTRACTOR MUST REFER TO ALL DRAWINGS. ALL COORDINATION IS THE RESPONSIBILITY OF THE CONTRACTOR.

H. DETAILS INCLUDED HEREIN ARE INTENDED TO SHOW THE END RESULT OF DESIGN. MINOR MODIFICATIONS MAY BE REQUIRED TO SUIT JOB CONDITIONS OR SITUATIONS AND SUCH MODIFICATIONS SHALL BE INCLUDED AS PART OF THE SCOPE OF WORK.

I. THE CONTRACTOR INVOLVED SHALL VISIT THE JOB SITE AND FAMILIARIZE THEMSELVES WITH ALL CONDITIONS AFFECTING THE PROPOSED PROJECT, WITH THE CONSTRUCTION AND CONTRACT DOCUMENTS, AND CONFIRM THAT THE PROJECT MAY BE ACCOMPLISHED AS SHOWN PRIOR TO PROCEEDING WITH CONSTRUCTION. ANY ERRORS, OMISSIONS OR DISCREPANCIES ARE TO BE BROUGHT TO THE ATTENTION OF THE CONSTRUCTION MANAGER.

J. CONTRACTOR SHALL VERIFY ALL MEASUREMENTS AT THE SITE BEFORE ORDERING ANY MATERIALS OR DOING ANY WORK. NO EXTRA CHARGE OR COMPENSATION SHALL BE ALLOWED DUE TO DIFFERENCES BETWEEN ACTUAL DIMENSIONS AND DIMENSIONS INDICATED ON THE CONSTRUCTION DRAWINGS. SUBMIT ANY DISCREPANCY IN DIMENSIONS TO THE CONSTRUCTION MANAGER FOR CONSIDERATION BEFORE PROCEEDING WITH WORK IN THE AFFECTED AREA.

K. NO PLEA OF IGNORANCE OF CONDITIONS THAT EXIST OR OF THE DIFFICULTIES OR CONDITIONS THAT MAY BE ENCOUNTERED OR ANY OTHER RELEVANT MATTER CONCERNING THE WORK TO BE PERFORMED IN THE EXECUTION OF THE WORK WILL BE ACCEPTED AS AN EXCUSE FOR FAILURE OR OMISSION ON THE PART OF THE CONTRACTOR TO FULFILL EVERY DETAIL OF THE REQUIREMENTS GOVERNING THE WORK.

L. THE CONTRACTOR SHALL RECEIVE WRITTEN AUTHORIZATION TO PROCEED WITH CONSTRUCTION PRIOR TO STARTING WORK ON ANY ITEM THAT IS NOT CLEARLY DEFINED BY THE CONSTRUCTION DRAWINGS DOCUMENTS.

M. THE CONTRACTOR SHALL SUPERVISE AND DIRECT THE PROJECT DESCRIBED HEREIN. THE CONTRACTOR SHALL BE SOLELY RESPONSIBLE FOR ALL CONSTRUCTION MEANS, METHODS, TECHNIQUES, SEQUENCES AND PROCEDURES, SUBJECT TO APPROVAL OF CONSTRUCTION MANAGER AND FOR COORDINATING ALL PORTIONS OF THE WORK UNDER THE CONTRACT.

N. THE CONTRACTOR SHALL FAMILIARIZE HIMSELF WITH AND INSTALL ALL EQUIPMENT AND MATERIALS ACCORDING TO THE MANUFACTURER'S SPECIFICATIONS UNLESS NOTED OTHERWISE OR WHERE LOCAL CODES AND ORDINANCES TAKE PRECEDENCE.

O. THE CONTRACTOR SHALL PROVIDE AT THE PROJECT SITE A FULL SET OF CONSTRUCTION DOCUMENTS UPDATED WITH THE LATEST REVISIONS AND ADDENDUM OR CLARIFICATION AND THE BUILDING PERMIT FOR USE BY ALL PERSONNEL INVOLVED WITH THE PROJECT.

P. PROVIDE A PORTABLE FIRE EXTINGUISHER WITH A RATING OF NOT LESS THAN 2-A OR 2-10BC WITHIN 75 FEET TRAVEL DISTANCE TO ALL PORTIONS OF THE PROJECT AREA DURING CONSTRUCTION.

Q. THE EXISTING STRUCTURAL COMPONENTS OF THIS PROJECT SITE ARE NOT TO BE ALTERED BY THIS CONSTRUCTION PROJECT UNLESS NOTED OTHERWISE.

R. THE CONTRACTOR SHALL MAKE NECESSARY PROVISIONS TO PROTECT EXISTING IMPROVEMENTS, EASEMENTS, PAVING, CURBING, ETC., DURING CONSTRUCTION. UPON COMPLETION OF WORK, CONTRACTOR SHALL REPAIR ANY DAMAGE THAT MAY HAVE OCCURRED DUE TO CONSTRUCTION ON OR ABOUT THE PROPERTY.

S. CONTRACTOR SHALL KEEP THE GENERAL AREA CLEAN AND HAZARD FREE DURING CONSTRUCTION AND DISPOSE OF ALL DIRT, DEBRIS, AND RUBBISH AND REMOVE EQUIPMENT NOT SPECIFIED AS REMAINING ON THE PROPERTY. PREMISES SHALL BE LEFT IN CLEAN CONDITION AND FREE FROM DUST, PAINT SPOTS OR SMUDGES OF ANY NATURE.

T. FINAL CLEANING: CLEAN EACH SURFACE OR UNIT TO THE CONDITION EXPECTED IN A NORMAL BUILDING CLEANING AND MAINTENANCE PROGRAM. COMPLY WITH MANUFACTURER'S INSTRUCTIONS.

U. SUBSTITUTIONS: CONTRACTOR SHALL OBTAIN CLIENT APPROVAL PRIOR TO MAKING ANY MODIFICATIONS OR SUBSTITUTIONS TO ITEMS SPECIFIED HEREIN.

V. SUBMITTALS: ALL SUBMITTALS (TO CLIENT) SHALL BE IN THREE (3) COPIES. WHERE SUBMITTALS ARE REQUIRED, AND WORK IS DONE WITHOUT CLIENT SUBMITTAL APPROVAL, CONTRACTOR MAY BE RESPONSIBLE FOR REWORK AT NO EXPENSE TO CLIENT.

W. ALL VISIBLE ELEMENTS SHALL BE PAINTED TO MATCH AND BLEND IN WITH THE EXISTING STRUCTURE.

L. D. STROBEL CO. INC.
DESIGN / CONSTRUCTION
WIRELESS COMMUNICATIONS
1022 SHARY CIRCLE, SUITE 9, CONCORD, CA. 94518
PHONE: 925-686-3241 FAX: 925-686-3350

REGISTERED PROFESSIONAL ENGINEER CONRAD L. ALFARO NO C28899 EXPIRE 3-31-25 CIVIL STATE OF CALIFORNIA

REVISIONS

NO.	DATE	DESCRIPTION
1	2/8/22	90% ZD
2	6/23/22	100% ZD/CD
3	7/25/22	100% ZD/CD Rev A
4	7/29/22	100% ZD/CD Rev B
5	8/20/23	100% ZD/CD FINAL
6	9/25/23	100% ZD/CD FINAL

SITE ADDRESS:
2001 STRAUCH DRIVE
ROSEVILLE, CA 95661
PLACER COUNTY
APN: 048-260-049

CITY OF ROSEVILLE
INFORMATION TECHNOLOGY
316 VERNON ST SUITE 300
ROSEVILLE, CA 95678

PROPOSED EQUIPMENT INSTALLATION

STRAUCH DRIVE

CITY OF ROSEVILLE CALIFORNIA

DRAWN: jjg | DATE: 8/16/22
FILE: 9276-A1
SHEET NO.

G-1

STANDARD NOTES AND SPECIFICATIONS (CONTINUED)

DIVISION 2 – SITE WORK

A. PROTECTION: PROTECT EXISTING CONSTRUCTION AND EQUIPMENT FROM ANY POSSIBLE DAMAGE DUE TO NEW CONSTRUCTION OR MODIFICATIONS OF EXISTING CONDITIONS. RESTORE ALL DAMAGED ITEMS TO ORIGINAL CONDITION.

B. NOISE AND DUST CONTROL: PROVIDE TEMPORARY BARRIERS AND CONSTRUCTION TO PROTECT ADJACENT OCCUPIED AREAS DURING CONSTRUCTION.

C. REMOVAL: ON A DAILY BASIS, REMOVE FROM WORK AREA ALL DEBRIS AND WASTE MATERIALS LEGALLY.

D. DEMOLITION: VERIFY EXACT LOCATION AND DIMENSIONS OF ALL NEW OPENINGS IN EXISTING CONSTRUCTION WITH WITH ALL APPROPRIATE TRADES. CUT PRECISELY AND NEATLY.

E. CONTRACTOR SHALL CONTACT USA BEFORE PROCEEDING WITH ANY EXCAVATION.

F. REPRESENTATION OF TRUE NORTH, OTHER THAN THOSE FOUND ON THE PLOT OF SURVEY DRAWING, SHALL NOT BE USED TO IDENTIFY OR ESTABLISH THE BEARING OF TRUE NORTH AT THE SITE. THE CONTRACTOR SHALL RELY SOLELY ON THE PLOT OF SURVEY DRAWING AND ANY SURVEYOR'S MARKINGS AT THE SITE FOR THE ESTABLISHMENT OF TRUE NORTH AND SHALL NOTIFY THE ARCHITECT/ENGINEER PRIOR TO PROCEEDING WITH THE WORK IF ANY DISCREPANCY IS FOUND BETWEEN THE VARIOUS ELEMENTS OF THE WORKING DRAWINGS AND THE TRUE NORTH ORIENTATION AS DEPICTED ON THE CIVIL SURVEY. THE CONTRACTOR SHALL ASSUME SOLE LIABILITY FOR ANY FAILURE TO NOTIFY THE ARCHITECT/ENGINEER.

G. NO FILL OR EMBANKMENT MATERIAL SHALL BE PLACED ON FROZEN GROUND. FROZEN MATERIALS, SNOW OR ICE SHALL NOT BE PLACED IN ANY FILL OR EMBANKMENT.

DIVISION 3 – CONCRETE (UNLESS OTHERWISE SPECIFIED)

A. CONCRETE SHALL HAVE A MINIMUM ULTIMATE COMPRESSIVE STRENGTH OF 3000 PSI AT 28 DAYS. SLUMP SHALL BE A 3" MINIMUM AND 5" MAXIMUM. CALCIUM CHLORIDE SHALL NOT BE USED.

B. REINFORCING BARS SHALL BE NEW DEFORMED STEEL BARS CONFORMING TO ASTM A615-82. NUMBER 3 BARS SHALL BE GRADE 40 AND #4 AND LARGER BARS GRADE 60. BARS SHALL BE CONTINUOUS AROUND CORNERS. LAP SPLICES SHALL BE 40 BAR DIAMETERS. CONCRETE COVER FOR REINFORCING BARS SHALL BE IN ACCORDANCE WITH SECTION 1907.7.1 OF THE 2013 CALIFORNIA BUILDING CODE.

C. GROUT: NON-SHRINK; GYPCRETE OR APPROVED EQUAL.

DIVISION 4 – MASONRY (UNLESS OTHERWISE SPECIFIED)

A. ALL CONCRETE BLOCKS SHALL BE GRADE "S" LOAD BEARING UNITS FW = 1500 PSI, (U.N.O.) CONFORMING TO A.S.T.M. C-90 (MEDIUM WEIGHT CONCRETE BLOCKS).

B. MORTAR (TYPE "S" MORTAR) MIX SHALL BE 1 PART CEMENT, 4-1/2 PARTS SAND AND A MAXIMUM OF 1/2 PART LIME PUTTY OR DRY HYDRATED LIME. GROUT MIX SHALL BE 1 PART CEMENT, 3 PARTS SAND, 2 PARTS PEA GRAVEL AND SUFFICIENT WATER TO CAUSE THE GROUT TO FLOW INTO ALL JOINTS WITHOUT SEGREGATION. DRY PACK, WHEN REQUIRED, SHALL BE 1:2 STIFF MIX.

C. PROPER UNITS SHALL BE USED TO PROVIDE FOR ALL WINDOWS, DOORS, BOND BEAMS, LINTELS, PILASTERS, ETC. WITH A MINIMUM OF CUTTING.

D. BLOCK UNITS SHALL HAVE A MOISTURE CONTENT NOT TO EXCEED 30% AT TIME OF LAYING TO PREVENT DEHYDRATION OF MORTAR AND GROUT AND SHALL BE FREE OF ALL SUBSTANCES WHICH MIGHT IMPAIR THE BOND OF THE UNITS TO MORTAR AND GROUT.

E. LAY MASONRY IN RUNNING BOND EXCEPT AS DESIGNATED OTHERWISE ON DRAWINGS. PROVIDE MASONRY BONDS AT ALL CORNERS AND INTERSECTIONS.

F. MORTAR JOINTS SHALL BE A MINIMUM OF 3/8" AND SHALL BE FULL HEAD AND BED.

G. VERTICAL REINFORCEMENT SHALL BE HELD IN POSITION AT THE TOP AND BOTTOM AND AT INTERVALS NOT EXCEEDING 96 BAR DIAMETERS.

H. GROUT POURS SHALL NOT EXCEED 4 FEET IN HEIGHT. GROUT CELLS AS NOTED ON PLANS. FC = 2500 PSI MINIMUM. ALL GROUT SHALL BE THOROUGHLY CONSOLIDATED AND RECONSOLIDATED, USING A MECHANICAL MASONRY VIBRATOR. WHEN GROUTING IS STOPPED FOR ONE HOUR OR LONGER, HORIZONTAL CONSTRUCTION JOINTS SHALL BE FORMED BY STOPPING THE POUR OF GROUT 1-1/2" MINIMUM BELOW THE TOP OF THE UPPERMOST UNIT.

I. ALL RETAINING WALLS WHICH ARE PART OF THE BUILDING STRUCTURE SHALL HAVE APPROVED WATERPROOFING INSTALLED ON EARTH SIDE WITH PROTECTION BOARD BEFORE BACKFILLING. PROVIDE BACK OF WALL DRAIN OR WEEP HOLES TO APPROPRIATE DISCHARGE.

J. CONCRETE BLOCK RETAINING WALLS SHALL CONFORM TO PROVISIONS SET FORTH IN SEC. 1609 AND SEC. 1611 FOR STRUCTURAL MASONRY WALLS.

K. ALL MASONRY TO BE INSTALLED PER UBC CHAPTER 21.

DIVISION 5 – METALS

A. STUDS AND JOISTS: GAUGE, SIZE AND TYPE AS INDICATED ON DRAWINGS.

B. MISCELLANEOUS STEEL PLATES AND SHAPES: ASTM A36.

1. ALL EXTERIOR METAL SHALL BE HOT DIP GALVANIZED.

C. BOLTS AND ANCHOR BOLTS: ASTM A307.

D. EXPANSION ANCHORS: RAMSET/RED HEAD OR APPROVED EQUAL OR AS INDICATED ON PLANS.

NOTE:
PLEASE SEE DRAWING SHEET A-6: ALL TUBE SHALL BE ASTM A500 GRADE B, AND ALL PIPE SHALL BE ASTM A53 GRADE B COMPRISING THE WAVEGUIDE BRIDGE.

E. CEILING METAL FRAMING SYSTEM. UNISTRUT P-1000 SERIES, COMPLETE WITH HANGERS AND ALL OTHER COMPONENTS AND FASTENERS AS REQUIRED FOR THE INSTALLATION INDICATED.

DIVISION 6 – WOOD AND PLASTICS

A. 3/4 INCH PLYWOOD TELCO BOARD: FIRE RETARDANT, EDGE BANDED VENEER GRADE "B". ATTACH TO STUDS WITH VERTICAL ROWS OF #12x2-1/2 INCH SELF TAPPING FLAT HEAD SCREWS @ 18 INCH O.C.

B. WOOD LEDGER: DOUGLAS FIR NO.1.

DIVISION 7 – THERMAL AND MOISTURE PROTECTION

A. SEALANT: NON-MODIFIED, ONE PART, SILICONE-RUBBER-BASED, AIR CURING, NON SAG, ELECTROMETRIC SEALANT.

B. ALL ROOFING RE-SEAL WORK NECESSITATED BY THE INSTALLATION OF NEW EQUIPMENT INCLUDING; ANTENNA MOUNTS, CABLE TRAY, CABLE DOGHOUSE, HVAC CONDENSING UNITS, ETC. SHALL BE PERFORMED BY A QUALIFIED ROOFING CONTRACTOR.

C. ROOFING: SPUD BACK EXISTING ROOFING AS REQUIRED TO ACCOMMODATE NEW CONSTRUCTION. FEATHER-IN NEW PILES IN CONTINUOUS BEDDINGS OF HOT ASPHALT. GRAVEL SURFACE AND ROOFING MATERIALS SHALL MATCH EXISTING. FLOODTEST PRIOR TO ACCEPTANCE TO ASSURE THAT NO LEAKS OCCUR.

D. WALKING SURFACE: PREFABRICATED UNITS, AS MANUFACTURED BY MANVILLE. PREPARE SURFACE AND ADHERE IN ACCORDANCE WITH MANUFACTURER'S INSTRUCTIONS.

E. FLASHING AND SHEET METAL: 24 GAUGE (UNLESS NOTED OTHERWISE) GALVANIZED SHEET METAL WITH ALL JOINTS SOLDERED, ALL EXPOSED EDGES HEMMED AND ALL FASTENERS CONCEALED. PERIMETER REGLET FLASHING SHALL MATCH EXISTING. FABRICATE AND INSTALL IN ACCORDANCE WITH SMACNA PUBLISHED STANDARDS. SUBMIT SHOP DRAWINGS FOR APPROVAL PRIOR TO FABRICATION.

F. INSULATION: 3-1/2 INCH MINERAL FIBER FRICTION FIT BATTS. "R" VALUE SHALL BE AS

G. CRICKET: TAPERED RIGID BOARD INSULATION TO PROVIDE SLOPES AS INDICATED.

I. METAL SIDING AND ROOFING:

1. SIDING SHALL BE 1-1/2" RIBBED, GA, CONFIGURATION AND FACTORY FINISHED TO MATCH EXISTING.
2. PROVIDE ALL FASTENERS, TRIM FILLERS AND ACCESSORIES.
3. SUBMIT SHOP DRAWINGS AND MANUFACTURER'S CATALOG DATA FOR APPROVAL.

J. FIRE-RATED PENETRATIONS: ALL FIRESTOPPED MATERIALS MUST BE UL APPROVED

1. PROVIDE NELSON MCT MULTI-CABLE TRANSIT FIRESTOP SEAL AT ALL CABLE PENETRATIONS THROUGH RATED CONSTRUCTION.
2. PROVIDE "FYRESLEEVE" AND/OR "FYRE FLANGE" RATED PENETRATIONS FOR PIPES AND CONDUITS THROUGH RATED WALL CONSTRUCTION. MANUFACTURER SHALL BE FYRESLEEVE INDUSTRIES INC. OR APPROVED EQUAL.

DIVISION 8 – DOORS AND WINDOWS

A. HOLLOW METAL DOOR AND FRAMES:

1. 18-GAUGE STEEL, FACTORY PRIMED, FLUSH PANEL EXTERIOR DOOR, THERMALLY INSULATED, WITH HOLLOW METAL FRAME. PREPARE DOOR AND FRAME TO RECEIVE MORTISED AND CONCEALED FINISHED HARDWARE. PROVIDE ANCHORS AND ACCESSORIES AS RECOMMENDED BY MANUFACTURER.

HARDWARE: (MATCH BUILDING STANDARDS FOR STYLE AND FINISH)

1. TUBULAR DEADLOCK WITH 2-3/4 INCH BACKSET STRIKE. SERIES 83T. MANUFACTURER SHALL BE BEST.
2. HEAVY DUTY PASSAGE LATCH SET WITH STRIKE. SERIES 8K. MANUFACTURER SHALL BE BEST.
3. LATCH GUARD. MANUFACTURER SHALL BE BEST.
4. HEAVY DUTY BALL BEARING HINGES WITH NON REMOVABLE PINS. MANUFACTURER HAGER OR APPROVED EQUAL.
5. HEAVY DUTY OVERHEAD CLOSER, WITH BUILT-IN CUSHION STOP AND HOLD OPEN FEATURE. INSTALL ON "ROOM SIDE" OF DOOR. MANUFACTURER SHALL BE NORTON OR APPROVED EQUAL.
6. FULL PERIMETER COMPRESSIBLE DOOR SEAL.
7. AUTOMATIC DOOR BOTTOM. MANUFACTURER SHALL BE PEMKO OR APPROVED EQUAL.
8. STANDARD ALUMINUM THRESHOLD.

DIVISION 9 – FINISHES

A. GYPSUM DRYWALL: 5/8 INCH THICK, TYPE "X", WITH ALL JOINTS TAPED. PROVIDE METAL CORNER BEADS AND EDGE CASINGS AT EXPOSED EDGES. SCREW ATTACH TO STUDS. TEXTURE FINISH.

B. GYPSUM SHEATHING: 5/8 INCH THICK, TYPE "X" ON EXTERIOR WALLS. FINISH MATERIALS TO BE FASTENED TO STUDS THRU SHEATHING.

C. FLOORING: 12x12x1/8 INCH GAUGE, ASBESTOS-FREE, VINYL COMPOSITION TILE "EXCELON SUPREME" AS MANUFACTURED BY ARMSTRONG. COLOR TO BE #55503 COOL WHITE. PROVIDE HAND BUFF CLEANING AND NON-STATIC SEALANT AT COMPLETION OF FLOORING INSTALLATION.

RUBBER BASE: 4 INCH HIGH x 1/8 INCH THICK, TOP-SET COVE BASE, FIRST QUALITY RUBBER BASE WITH ALL APPROPRIATE MELDED CORNERS AND END STOPS. MANUFACTURER SHALL BE ROPE OR APPROVED EQUAL. COLOR SHALL BE #75, SLATE GREY.

PAINTING: MANUFACTURER SHALL BE FULLER O'BRIEN OR APPROVED EQUAL. INTERIOR COLOR AS SELECTED BY CLIENT. EXTERIOR COLORS TO MATCH EXISTING CONSTRUCTION.

1. METAL SURFACES:
   A) FACTORY PRIMED SURFACE: TWO COATS SEMI-GLOSS ACRYLIC ENAMEL.
   B) GALVANIZED SURFACE: ACID WASH PRIOR TO ONE COAT PRIMER APPLICATION AND TWO COATS SEMI-GLOSS ACRYLIC ENAMEL.
   C) UNPRIMED SURFACES: ONE COAT PRIMER AND TWO COATS SEMI-GLOSS ACRYLIC ENAMEL.
2. WOOD SURFACES: ONE COAT PRIMER AND TWO COATS SEMI-GLOSS ACRYLIC ENAMEL.
3. GYPSUM BOARD SURFACES: ONE COAT PRIMER AND TWO COATS SEMI-GLOSS ACRYLIC ENAMEL.
4. FINAL REVIEW: PROVIDE TOUCH-UP PAINTING OF ALL SURFACES AS REQUIRED PRIOR TO JOB CLOSE-OUT.

DIVISION 10 – SPECIALTIES

A. CABLE RUNWAY: (UNLESS OTHERWISE SPECIFIED) 12 INCH WIDE, 1-1/2 INCH DEPTH, STRAIGHT LADDER SECTION, 9 INCH RUNG SPACING, COMPLETE WITH ALL SUPPORTS AND AND FASTENERS, MANUFACTURER SHALL BE SAUNDERS BROS. OR APPROVED EQUAL.

B. CABLE TRAY: WIDTH AS SHOWN ON PLANS, 4" DEPTH, 12" RUNG SPACING, COMPLETE WITH ALL SUPPORTS AND FASTENERS. MANUFACTURER SHALL BE PW OR EQUAL.

C. WAVEGUIDE ENTRY PORT: B1118 AS MANUFACTURED BY MICROFLECT.

DIVISION 11 – EQUIPMENT

NOT APPLICABLE.

DIVISION 12 – FURNISHINGS

NOT APPLICABLE.

DIVISION 13 – SPECIAL CONSTRUCTION

CELLULAR ANTENNAS: NIC. FACTORY FINISH PAINTED. FIELD TOUCH-UP PAINTING MAY BE REQUIRED.

DIVISION 14 – CONVEYING SYSTEMS

NOT APPLICABLE.

DIVISION 15 – MECHANICAL

GENERAL:

1. SCOPE:
   A) THE WORK OF THIS SECTION CONSISTS OF PROVIDING AND INSTALLING:
      1) TWO SELF-CONTAINED SYSTEM AIR COOLED, AIR CONDITIONING UNITS, COOLING ONLY, WITH CONDENSING AND FAN COIL UNITS, AND ALL CONTROLS.
      2) BATTERY EXHAUST FAN AS SHOWN ON THE DRAWINGS.
      3) MOTORIZED DAMPERS AS SHOWN ON THE DRAWINGS.
      4) DUCTWORK AND PIPING.
   B) PROVIDE SEISMIC RESTRAINTS FOR ALL EQUIPMENT, PIPING AND DUCTWORK IN ACCORDANCE WITH ALL APPLICABLE CODES AND REGULATIONS.
   C) SUBMIT MANUFACTURER'S TECHNICAL DATA FOR ALL EQUIPMENT TO CLIENT FOR APPROVAL.
   D) PROVIDE CORRECTED "AS-BUILT" DRAWINGS FOR THE SYSTEM AS INSTALLED TO CLIENT.
   E) PROVIDE OPERATION, MAINTENANCE AND INSTRUCTION MANUALS WITH TECHNICAL BULLETINS FOR EACH PIECE OF EQUIPMENT TO CLIENT.

B. PRODUCTS:

1. AIR CONDITIONING SYSTEM:
   A) PROVIDE A FACTORY-ASSEMBLED AND TESTED AIR CONDITIONING UNIT FOR OUTSIDE WALL MOUNTING, CONSISTING OF COMPRESSORS, CONDENSERS, EVAPORATOR COILS, CONDENSER AND EVAPORATOR FANS, REFRIGERATION AND ECONOMIZER, WHICH INCLUDING 30% ASHRAE FILTERS, MOTORIZED DAMPERS, MIXED AIR SENSOR, COMPRESSOR LOCKOUT, THERMOSTAT AND MOISTURE ELIMINATOR. ACCESSSORIES SHALL INCLUDE ANTI-RECYCLING RELAY AND DUAL PRESSURE CONTROL. AIR CONDITIONING UNIT SHALL INCORPORATE AN AUXILIARY RELAYS WIRED TO A TERMINAL STRIP. THE COIL OF THE RELAYS SHALL BE FACTORY WIRED TO ENERGIZE WHENEVER THE FAN CONTRACTOR IS ENERGIZED. A FORM "C" DRY CONTACT (RATED AT 10 AMPS) SHALL BE WIRED TO A TERMINAL STRIP FOR CLIENT'S USE. MANUFACTURER SHALL BE BARD OR APPROVED EQUAL.
2. DUCTWORK: FABRICATE FROM GALVANIZED SHEET STEEL IN ACCORDANCE WITH SMACNA MANUAL FOR LOW PRESSURE DUCT CONSTRUCTION.
3. AIR OUTLETS:
   A) SUPPLY GRILLE: TITUS MODEL 300FL, ALL ALUMINUM, OR APPROVED EQUAL WITH ADJUSTABLE BLADES AND FACTORY ENAMEL FINISH. PERFORMANCE AS SHOWN ON DRAWINGS.

      RETURN GRILL: TITUS MODEL 350ZFL, ALL ALUMINUM, OR APPROVED EQUAL WITH FIXED HORIZONTAL BLADES, 0' DEFLECTION AND FACTORY ENAMEL FINISH. PERFORMANCE AS SHOWN ON DRAWINGS.
4. BATTERY EXHAUST FAN:

   CEILING EXHAUSTER WITH INTAKE GRILLE AND U.L. LABELED, PEN VENERATOR, AS SCHEDULED.
5. MOTORIZED DAMPER: RUSKIN MODEL SD50 LOW LEAKAGE RATED, U.L. LABELED, MOTOR-DRIVEN SMOKE DAMPERS. NORMALLY CLOSED AND POWER TO OPEN, UNLESS INDICATED OTHERWISE. ELECTRICAL 120 VOLT VAC, 1 PHASE 60 HERTZ. DAMPER TO CLOSE ON HALON DISCHARGE.
6. VENT PIPING: SCHEDULE 40 GALVANIZED STEEL AND COUPLING TYPE FITTING.

EXECUTION:

1. INSTALL ALL EQUIPMENT IN ACCORDANCE WITH MANUFACTURER'S INSTRUCTIONS. INSTALL PLUMB AND LEVEL, FIRMLY ANCHORED IN LOCATIONS INDICATED AND MAINTAIN MANUFACTURER'S RECOMMENDED CLEARANCES.
2. START-UP AIR CONDITIONING EQUIPMENT IN ACCORDANCE WITH MANUFACTURER'S INSTRUCTIONS. TEST CONTROLS AND DEMONSTRATE COMPLIANCE WITH REQUIREMENTS. REPLACE DAMAGED OR MALFUNCTIONING CONTROLS AND EQUIPMENT.
3. PROVIDE ELECTRIC ISOLATION TO PREVENT METALLIC CONTACT BETWEEN COPPER PIPING AND FERROUS METALS.
4. PROVIDE ALL ELECTRICAL WIRING LESS THAN 100 VOLTS AC OR DC IN ACCORDANCE WITH DIVISION 16.
5. PROVIDE SEISMIC RESTRAINTS FOR PIPING AND DUCTWORK IN ACCORDANCE WITH ALL APPLICABLE CODES AND REGULATIONS.
6. PROVIDE RESTRAINT FOR MECHANICAL EQUIPMENT TO WITHSTAND VERTICAL AND HORIZONTAL SEISMIC FORCES AS DEFINED IN THE UNIFORM BUILDING CODE.

DIVISION 16 – ELECTRICAL

A. GENERAL:

1. EXAMINE THE WORK SITE TO DETERMINE CONDITIONS UNDER WHICH THE WORK IS TO BE PERFORMED AND COMPARE SITE CONDITIONS WITH DRAWINGS AND SPECIFICATIONS. ASCERTAIN AND CHECK THE LOCATIONS OF ANY EXISTING STRUCTURES AND EQUIPMENT WHICH WILL AFFECT THE WORK SPECIFIED HEREIN. NO ALLOWANCE SHALL BE APPROVED DUE TO THE FAILURE OF ANY PARTY IN MAKING A COMPLETE SITE EXAMINATION.
2. COMPLY WITH THE REQUIREMENTS OF THE NATIONAL ELECTRICAL CODE AND ALL OTHER STATE AND LOCAL CODES. ALL MATERIALS SHALL BE U.L. LISTED.
3. SEISMIC RESTRAINT: ALL ELECTRICAL EQUIPMENT INCLUDED BUT NOT LIMITED TO BOXES, PANELBOARDS, LIGHTING FIXTURES AND RACEWAYS, SHALL BE ADEQUATELY ANCHORED/BRACED TO WITHSTAND SEISMIC FORCES IN ACCORDANCE WITH SMACNA GUIDELINES FOR SEISMIC RESTRAINTS OF MECHANICAL SYSTEMS AND ALL OTHER APPLICABLE CODES AND REGULATIONS.
4. SUBMIT SHOP DRAWINGS AND/OR CATALOG CUTS ON ALL MATERIALS AND EQUIPMENT TO CLIENT FOR APPROVAL.

B. MATERIALS:

1. CONDUIT:
   A) INTERIOR: 1/2 INCH TRADE SIZE, MINIMUM; E.M.T. FOR CONDUITS. MANUFACTURER SHALL BE TRIANGLE, ALLIED OR APPROVED EQUAL.
   B) EXTERIOR: 3/4 INCH TRADE SIZE, MINIMUM; RIGID GALVANIZED STEEL FOR EXPOSED CONDUIT. SEALTIGHT FLEXIBLE CONDUIT FOR MOTORS OR SIMILAR CONNECTIONS. MANUFACTURER SHALL BE TRIANGLE, ALLIED OR APPROVED EQUAL.
2. CONDUIT FITTINGS: THREADED TYPE FOR RIGID STEEL CONDUIT AND COMPRESSION TYPE FOR E.M.T. MANUFACTURER SHALL BE RACO OR APPROVED EQUAL. SET SCREW FITTINGS NOT PERMITTED.
3. OUTLET BOXES: FOUR-INCH-SQUARE OR OCTAGONAL, CODE GAUGE STEEL, GALVANIZED. MANUFACTURER SHALL BE STEEL CITY OR APPROVED EQUAL.
4. WIRE: COPPER CONDUCTORS, 600V, TYPE THWN #12 MINIMUM FOR POWER AND #14 FOR CONTROL OR ALARM CIRCUITS (UNLESS OTHERWISE NOTED), COLOR CODED. MANUFACTURER SHALL BE TRIANGLE, ROME OR APPROVED EQUAL.
5. WIRE CONNECTIONS: "SCOTCHLOKS", TYPE RY AND/OR LUGS TYPE WDA.
6. GROUND CONDUCTOR: AS PER CLIENT GROUNDING REQUIREMENT.
7. GROUND CONNECTION: ALL GROUNDING CONNECTIONS SHALL BE CADWELD UNLESS OTHERWISE SPECIFIED OR APPROVED BY CLIENT
8. LIGHTING FIXTURES: AS NOTED ON DRAWINGS, COMPLETE WITH LAMPS, BALLASTS AND MOUNTING ACCESSORIES FOR A COMPLETE INSTALLATION.
9. LAMPS: FLUORESCENT, ENERGY-SAVING TYPE, COOL WHITE. MANUFACTURER SHALL BE PHILLIPS, SYLVANIA OR APPROVED EQUAL.
10. BALLASTS: ENERGY-SAVING TYPE, RAPID START FLUORESCENT LAMPS. MANUFACTURER SHALL BE ADVANCE MARK III OR APPROVED EQUAL.
11. PANELBOARD: SAFETY DEAD-FRONT CIRCUIT BREAKER TYPE, SURFACE MOUNTED WITH MAIN LUGS AND BRANCH CIRCUIT BREAKERS AS NOTED ON PANEL SCHEDULE, 120/240V, 1 PHASE, 3W WITH NEUTRAL EQUIPMENT GROUND BUS. SQUARE D NQOD, BOLT-ON. FEEDER BREAKERS FOR AIR CONDITIONING EQUIPMENT SHALL BE U.L. LISTED FOR HACR SERVICE.
12. RECEPTACLES: DUPLEX 20A, 2P, 3W GROUNDING TYPE, NEMA 5-20, HUBBEL #5362 OR APPROVED EQUAL.
13. LIGHT SWITCHES: 20A, 1P, 120V, HUBBEL #1221 OR APPROVED EQUAL.
14. CIRCUIT BREAKERS: MOLDED CASE TYPE, 10,000A INTERRUPTING CAPACITY, MINIMUM, UNLESS OTHERWISE NOTED.
15. ALARM PANEL: AS NOTED ON DRAWINGS.
16. SURGE ARRESTOR: JOSLYN MODEL #1265-85, OR APPROVED EQUAL.
17. DISCONNECT SWITCH: AMPERES AND NUMBER OF POLES AS NOTED ON THE DRAWINGS. MANUFACTURER SHALL BE SQUARE D COMPANY OR APPROVED EQUAL.
18. MANUAL TRANSFER SWITCH: 260A, 240V, 2POLE WITH SOLID NEUTRAL, NEMA 1 ENCLOSURE. MANUFACTURER SHALL BE ASCO CAT NO.386.
19. SLEEVE TYPE, APPLETON CAT. #AR20044 (4-W). RECEPTACLE FOR GENERATOR: 200A, 4 WIRE 4 POLE, RATED 600 VOLT, PIN AND

C. EXECUTION:

1. INSTALL GROUNDING SYSTEM PER THE FOLLOWING REFERENCES:
   A) "CLIENT PRACTICE," SECTION 795-805-071, CLIENT CURRENT.
   B) "CLIENT PRACTICE," SECTION 795-805-072, CLIENT CURRENT.
   C) "CLIENT PRACTICE," SECTION 795-805-085, CLIENT CURRENT.
   D) "TELECOMMUNICATIONS ELECTRICAL PROTECTION," AT&T, 1985.
   E) "CONSTRUCTION CONTRACT GROUNDING GUIDELINES FOR CELLULAR RADIO INSTALLATION, CLIENT/SITE DEVELOPMENT, DEC. 18, 1992 REVISION 02.
2. UPON COMPLETION OF WORK, PERFORMS CONTINUITY, SHORT CIRCUIT, AND GROUNDING TESTS FOR APPROVAL. SUBMIT TEST REPORTS AND FURNISH TO CLIENT PRINTS SHOWING "AS INSTALLED WORK." CLEAN PREMISES OF ALL DEBRIS RESULTING FROM WORK AND LEAVE WORK IN A COMPLETE AND UNDAMAGED CONDITION.

DIVISION 18 – THROUGH PENETRATIONS

A. FLOORS AND WALLS:
ALL STEEL, FERROUS OR COPPER CONDUITS, PIPES, TUBES, VENTS, CONCRETE, OR MASONRY PENETRATING ITEMS SHALL HAVE THEIR ANNULAR SPACES SEALED BY AN APPROVED FIRESTOPPING MATERIAL. PENETRATIONS BY STEEL, FERROUS OR COPPER CONDUITS, PIPES, TUBES AND VENTS PASSING THROUGH CONCRETE FLOORS OR WALLS WITH A MAXIMUM DIAMETER OF 6" NOMINAL DIAMETER SHALL BE SEALED WITH CONCRETE, GROUT OR MORTAR INSTALLED THE FULL THICKNESS OF THE FLOOR OR WALL.

B. PENETRATION FIRESTOP SYSTEM:
PENETRATONS SHALL BE PROTECTED BY AN APPROVED PENETRATION FIRESTOP SYSTEM INSTALLED AS TESTED IN ACCORDANCE WITH 2013 CBC TITLE 24, PART 2 VOLUME 1, SEC. 714 AND SHALL HAVE AN "F" RATING OF NOT LESS THAN THE REQUIRED FIRE-RESISTANCE RATING OF THE WALL PENETRATED.

*** END OF SPECIFICATIONS ***

L. D. STROBEL CO. INC.
DESIGN / CONSTRUCTION
WIRELESS COMMUNICATIONS
1022 SHARY CIRCLE, SUITE 9, CONCORD, CA. 94518
PHONE: 925-686-3241 FAX: 925-686-3350

REVISIONS

NO.	DATE	DESCRIPTION
1	2/8/22	90% ZD
2	6/23/22	100% ZD/CD
3	7/25/22	100% ZD/CD Rev A
4	7/29/22	100% ZD/CD Rev B
5	8/20/23	100% ZD/CD FINAL
6	9/25/23	100% ZD/CD FINAL

SITE ADDRESS:
2001 STRAUCH DRIVE
ROSEVILLE, CA 95661
PLACER COUNTY
APN: 048-260-049

CITY OF ROSEVILLE
INFORMATION TECHNOLOGY
316 VERNON ST SUITE 300
ROSEVILLE, CA 95678

PROPOSED EQUIPMENT INSTALLATION
STRAUCH DRIVE

CITY OF ROSEVILLE CALIFORNIA

DRAWN: jjg | DATE: 10/3/23
FILE: 9276-A1
SHEET NO.
G-2

PROJECT NUMBER: EN22-0684

CITY OF ROSEVILLE CALIFORNIA
DEVELOPMENT SERVICES – ENGINEERING LAND DEVELOPMENT
311 Vernon Street
Roseville, CA 95678 (916) 774-5339

PUBLIC IMPROVEMENTS REQUIREMENTS

GRADING:

1. GRADING SHALL CONFORM TO APPENDIX CHAPTER 33 UBC, LATEST EDITION, AND TO THE RECOMMENDATIONS OF THE GEOTECHNICAL ENGINEERING REPORT BY . (ENGINEERING DIV. FILE NO. 308-**979**)
2. ALL EROSION CONTROL SHALL BE PLACED AS SPECIFIED ON THESE PLANS OR AS DETERMINED BY THE ENGINEERING DIVISION INSPECTOR.
3. LOTS SHALL BE GRADED WITH A CONSTANT SLOPE ALONG THE FRONTAGE OF THE RIGHT-OF-WAY, FROM BUILDING SETBACK LINE TO BACK OF SIDEWALK. ALL SLOPES STEEPER THAN 4:1 ALONG THIS FRONTAGE SHALL HAVE EROSION NETTING INSTALLED.
4. ALL REAR LOT CORNER ELEVATIONS SHALL BE EQUAL TO OR GREATER THAN THE HIGHEST ADJACENT PAD GRADE UNLESS SPECIFICALLY SHOWN ON THESE PLANS AND APPROVED BY ENGINEERING DIVISION.
5. NON-POTABLE WATER SHALL BE SPRAYED ON ALL EXPOSED EARTH SURFACES DURING CLEARING GRADING, EARTH MOVING, AND OTHER SITE PREPARATION ACTIVITIES. THE EXPOSED EARTH SHALL BE WATERED THROUGHOUT THE DAY TO MINIMIZE DUST.
6. TARPAULINS OR OTHER EFFECTIVE COVERS SHALL BE USED ON ALL STOCKPILED EARTH MATERIAL AND ON HAUL TRUCKS TO MINIMIZE DUST.
7. THE CITY SHALL HAVE THE AUTHORITY TO STOP ALL GRADING OPERATIONS, IF, IN OPINION OF CITY STAFF, INADEQUATE DUST CONTROL MEASURES ARE BEING PRACTICED OR EXCESSIVE WIND CONDITIONS CONTRIBUTE TO FUGITIVE DUST EMISSIONS.
8. ADJACENT STREET FRONTAGES SHALL BE SWEPT AT LEAST ONCE A DAY TO REMOVE SILT AND OTHER DIRT WHICH IS EVIDENT FROM CONSTRUCTION ACTIVITIES.
9. THE CONTRACTOR SHALL BE RESPONSIBLE FOR CLEANING CONSTRUCTION VEHICLES LEAVING THE SITE ON A DAILY BASIS TO PREVENT DUST, SILT AND DIRT FROM BEING RELEASED OR TRACKED OFFSITE.
10. CONSTRUCTION SHALL STOP IF CULTURAL RESOURCES ARE SUSPECTED. IT IS POSSIBLE THAT PREVIOUS ACTIVITIES HAVE OBSCURED SURFACE EVIDENCE OF CULTURAL RESOURCES. IF SIGNS OF AN ARCHEOLOGICAL SITE, SUCH AS ANY UNUSUAL AMOUNTS OF STONE, BONE, OR SHELL, ARE UNCOVERED DURING GRADING OR OTHER CONSTRUCTION ACTIVITIES, WORK SHALL BE HALTED WITHIN 100 FEET OF THE FIND AND THE ROSEVILLE COMMUNITY DEVELOPMENT DEPARTMENT SHALL BE NOTIFIED. A QUALIFIED ARCHEOLOGIST SHALL BE CONSULTED FOR AN ON-SITE EVALUATION. THE ARCHEOLOGIST MAY REQUIRE ADDITIONAL MITIGATION.
11. SHOULD GRADING OPERATIONS UNCOVER HAZARDOUS MATERIALS, OR WHAT APPEARS TO BE HAZARDOUS MATERIALS, THE FIRE DEPARTMENT SHALL BE CONTACTED IMMEDIATELY AT (916) 774-5820. THE AREA, WHICH CONTAINS THE HAZARDOUS MATERIALS, SHALL BE MARKED OFF UNTIL AN INVESTIGATION BY A MEMBER OF THE FIRE DEPARTMENT IS CONDUCTED.
12. GRADES SHOWN OUTSIDE OF THE PUBLIC RIGHT OF WAY WITHIN THE APPROVED GRADING PLAN ARE SUBJECT TO FURTHER REVIEW AND MODIFICATION BY THE BUILDING DIVISION FOR COMPLIANCE WITH THE UNIFORM BUILDING CODE AND STATE OF CALIFORNIA TITLE 24 HANDICAP ACCESSIBILITY REQUIREMENTS.
13. CONTAMINATED SOIL – DEVELOPER AGREES TO PROPERLY ADHERE TO ALL THEN CURRENT STATE AND FEDERAL REQUIREMENTS WHEN ANY EVIDENCE OF TOXIC, HAZARDOUS OR CONTAMINATED SOILS ARE ENCOUNTERED DURING ANY AND ALL EXCAVATION OR GRADING OPERATIONS, AND TO INDEMNIFY, DEFEND AND HOLD HARMLESS THE CITY OR ROSEVILLE, ITS OFFICERS, AGENTS AND EMPLOYEES, FROM ANY AND ALL LIABILITY, COSTS, CLAIMS, FEES, FINES, PENALTIES AND CLAIMS OF OR DAMAGE OF ANY TYPE WHATSOEVER. EXTRA COSTS FOR REMEDIATION AND/OR REMOVAL OF SOIL SHALL BE BOURN SOLELY BY THE DEVELOPER. THE PARTIES INTEND THAT THIS PROVISION BE BROADLY CONSTRUED.

E:\Develop\Standard Notes\Grading-Non SWPPP Version REV. 04/27/2009

CITY OF ROSEVILLE CALIFORNIA
DEVELOPMENT SERVICES – ENGINEERING LAND DEVELOPMENT
311 Vernon Street
Roseville, CA 95678 (916) 774-5339

PUBLIC IMPROVEMENTS REQUIREMENTS

GRADING:

1. GRADING SHALL CONFORM TO APPENDIX CHAPTER 33 UBC, LATEST EDITION, AND TO THE RECOMMENDATIONS OF THE GEOTECHNICAL ENGINEERING REPORT BY . (ENGINEERING DIV. FILE NO. 308-___)
2. ALL EROSION AND SEDIMENT CONTROL MEASURES SHALL BE IMPLEMENTED AS SPECIFIED IN THE STORMWATER POLLUTION PREVENTION PLAN (SWPPP) FOR THIS PROJECT OR AS DETERMINED BY THE CITY INSPECTOR. THE SWPPP IS CONSIDERED A DYNAMIC DOCUMENT AND WILL CHANGE AS CONDITIONS WARRANT. PERMANENT EROSION AND SEDIMENT CONTROL MEASURES WILL BE CONSTRUCTED AS SHOWN ON THE SWPPP PLAN.
3. LOTS SHALL BE GRADED WITH A CONSTANT SLOPE ALONG THE FRONTAGE OF THE RIGHT-OF-WAY, FROM BUILDING SETBACK LINE TO BACK OF SIDEWALK. ALL TEMPORARY AND PERMANENT SLOPES STEEPER THAN 4:1 ALONG THIS FRONTAGE SHALL HAVE EROSION NETTING INSTALLED.
4. ALL REAR LOT CORNER ELEVATIONS SHALL BE EQUAL TO OR GREATER THAN THE HIGHEST ADJACENT PAD GRADE UNLESS SPECIFICALLY SHOWN ON THESE PLANS AND APPROVED BY ENGINEERING DIVISION.
5. NON-POTABLE WATER SHALL BE SPRAYED ON ALL EXPOSED EARTH SURFACES DURING CLEARING GRADING, EARTH MOVING, AND OTHER SITE PREPARATION ACTIVITIES. THE EXPOSED EARTH SHALL BE WATERED THROUGHOUT THE DAY TO MINIMIZE DUST.
6. TARPAULINS OR OTHER EFFECTIVE COVERS SHALL BE USED ON ALL STOCKPILED EARTH MATERIAL AND ON HAUL TRUCKS TO MINIMIZE DUST.
7. THE CITY SHALL HAVE THE AUTHORITY TO STOP ALL GRADING OPERATIONS, IF, IN OPINION OF CITY STAFF, INADEQUATE DUST CONTROL MEASURES ARE BEING PRACTICED OR EXCESSIVE WIND CONDITIONS CONTRIBUTE TO FUGITIVE DUST EMISSIONS.
8. ADJACENT STREET FRONTAGES SHALL BE SWEPT AT LEAST ONCE A DAY TO REMOVE SILT AND OTHER DIRT WHICH IS EVIDENT FROM CONSTRUCTION ACTIVITIES. REFER TO SCHEDULES WITHIN SWPPP.
9. THE CONTRACTOR SHALL BE RESPONSIBLE FOR CLEANING CONSTRUCTION VEHICLES LEAVING THE SITE ON A DAILY BASIS TO PREVENT DUST, SILT AND DIRT FROM BEING RELEASED OR TRACKED OFFSITE. REFER TO SWPPP FOR SPECIFIC REQUIRMENTS.
10. CONSTRUCTION SHALL STOP IF CULTURAL RESOURCES ARE SUSPECTED. IT IS POSSIBLE THAT PREVIOUS ACTIVITIES HAVE OBSCURED SURFACE EVIDENCE OF CULTURAL RESOURCES. IF SIGNS OF AN ARCHEOLOGICAL SITE, SUCH AS ANY UNUSUAL AMOUNTS OF STONE, BONE OR SHELL, ARE UNCOVERED DURING GRADING OR OTHER CONSTRUCTION ACTIVITIES, WORK SHALL BE HALTED WITHIN 100 FEET OF THE FIND AND THE ROSEVILLE COMMUNITY DEVELOPMENT DEPARTMENT SHALL BE NOTIFIED. A QUALIFIED ARCHEOLOGIST SHALL BE CONSULTED FOR AN ON-SITE EVALUATION. THE ARCHEOLOGIST MAY REQUIRE ADDITIONAL MITIGATION.
11. SHOULD GRADING OPERATIONS UNCOVER HAZARDOUS MATERIALS, OR WHAT APPEARS TO BE HAZARDOUS MATERIALS, THE FIRE DEPARTMENT SHALL BE CONTACTED IMMEDIATELY AT (916) 774-5820. THE AREA, WHICH CONTAINS THE HAZARDOUS MATERIALS, SHALL BE MARKED OFF UNTIL AN INVESTIGATION BY A MEMBER OF THE FIRE DEPARTMENT IS CONDUCTED.
12. GRADES SHOWN OUTSIDE OF THE PUBLIC RIGHT OF WAY WITHIN THE APPROVED GRADING PLAN ARE SUBJECT TO FURTHER REVIEW AND MODIFICATION BY THE BUILDING DIVISION FOR COMPLIANCE WITH THE UNIFORM BUILDING CODE AND STATE OF CALIFORNIA TITLE 24 HANDICAP ACCESSIBILITY REQUIREMENTS.
13. THE CONTRACTOR/DEVELOPER IS EXPECTED TO COMPLY WITH THE FUGITIVE DUST CONTROL REQUIREMENTS FROM THE PLACER COUNTY AIR POLLUTION CONTROL DISTRICT: WWW.PLACER.CA.GOV/APCD
14. CONTAMINATED SOIL – DEVELOPER AGREES TO PROPERLY ADHERE TO ALL THEN CURRENT STATE AND FEDERAL REQUIREMENTS WHEN ANY EVIDENCE OF TOXIC, HAZARDOUS OR CONTAMINATED SOILS ARE ENCOUNTERED DURING ANY AND ALL EXCAVATION OR GRADING OPERATIONS, AND TO INDEMNIFY, DEFEND AND HOLD HARMLESS THE CITY OR ROSEVILLE, ITS OFFICERS, AGENTS AND EMPLOYEES, FROM ANY AND ALL LIABILITY, COSTS, CLAIMS, FEES, FINES, PENALTIES AND CLAIMS OF OR DAMAGE OF ANY TYPE WHATSOEVER. EXTRA COSTS FOR REMEDIATION AND/OR REMOVAL OF SOIL SHALL BE BOURN SOLELY BY THE DEVELOPER. THE PARTIES INTEND THAT THIS PROVISION BE BROADLY CONSTRUED.

E:\Develop\Standard Notes\Grading_SWPPP Version REV. 04/28/2009

CITY OF ROSEVILLE CALIFORNIA
DEVELOPMENT SERVICES – ENGINEERING LAND DEVELOPMENT
311 Vernon Street
Roseville, CA 95678 (916) 774-5339

PUBLIC IMPROVEMENTS REQUIREMENTS

AIR QUALITY:

THE FOLLOWING NOTES ARE PROVIDED AS REFERENCE TO APPLICABLE PLACER COUNTY AIR POLLUTION CONTROL DISTRICT ADOPTED RULES AND REGULATIONS. COMPLIANCE WITH ALL APPLICABLE APCD RULES IS THE SOLE RESPONSIBILITY OF THE CONTRACTOR. AIR QUALITY RULES ARE ENFORCED SOLELY BY THE PLACER COUNTY AIR POLLUTION CONTROL DISTRICT.

1. CONSTRUCTION EQUIPMENT EXHAUST EMISSIONS SHALL NOT EXCEED PLACER COUNTY APCD RULE 202 VISIBLE EMISSION LIMITATIONS. OPERATORS OF VEHICLES AND EQUIPMENT FOUND TO EXCEED OPACITY LIMITS ARE TO BE IMMEDIATELY NOTIFIED BY APCD TO CEASE OPERATIONS AND THE EQUIPMENT MUST BE REPAIRED WITHIN 72 HOURS. *(BASED ON APCD RULE 202)*
2. THE CONTRACTOR SHALL SUSPEND ALL GRADING OPERATIONS WHEN FUGITIVE DUST EXCEEDS PLACER COUNTY APCD RULE 228 (FUGITIVE DUST) LIMITATIONS. THE PRIME CONTRACTOR SHALL BE RESPONSIBLE FOR HAVING AN INDIVIDUAL WHO IS CARB-CERTIFIED TO PERFORM VISIBLE EMISSIONS EVALUATIONS (VEE). THIS INDIVIDUAL SHALL EVALUATE COMPLIANCE WITH RULE 228 ON A WEEKLY BASIS. IT IS TO BE NOTED THAT FUGITIVE DUST IS NOT TO EXCEED 40% OPACITY AND NOT GO BEYOND THE PROPERTY BOUNDARY AT ANY TIME. LIME OR OTHER DRYING AGENTS UTILIZED TO DRY OUT WET GRADING AREAS SHALL NOT EXCEED PLACER COUNTY APCD RULE 228 FUGITIVE DUST LIMITATIONS. OPERATORS OF VEHICLES AND EQUIPMENT FOUND TO EXCEED OPACITY LIMITS WILL BE NOTIFIED BY APCD AND THE EQUIPMENT MUST BE REPAIRED WITHIN 72 HOURS. ALL PROJECTS IN EXCESS OF 5 ACRES SHALL HAVE AN APPROVED DUST CONTROL PLAN FROM THE PLACER COUNTY AIR POLLUTION CONTROL DISTRICT. *(BASED ON APCD RULE 228)*
3. DURING CONSTRUCTION, TRAFFIC SPEEDS ON ALL UNPAVED SURFACES SHALL BE LIMITED TO 15 MILES PER HOUR OR LESS. *(BASED ON APCD RULE 228 / SECTION 401.2)*
4. DURING CONSTRUCTION, NO OPEN BURNING OF REMOVED VEGETATION SHALL BE ALLOWED UNLESS PERMITTED BY THE PCAPCD. ALL REMOVED VEGETATIVE MATERIAL SHALL BE EITHER CHIPPED ON SITE OR TAKEN TO AN APPROPRIATE RECYCLING SITE OR IF A SITE IS NOT AVAILABLE, A LICENSED DISPOSAL SITE. *(BASED ON APCD RULE 310)*
5. A PERSON SHALL NOT DISCHARGE INTO THE ATMOSPHERE VOLATILE ORGANIC COMPOUNDS (VOCS) CAUSED BY THE USE OR MANUFACTURE OF CUTBACK OR EMULSIFIED ASPHALTS FOR PAVING, ROAD CONSTRUCTION OR ROAD MAINTENANCE, UNLESS SUCH MANUFACTURE OR USE COMPLIES WITH THE PROVISIONS RULE 217. *(BASED ON APCD RULE 217)*.
6. PROCESSES THAT DISCHARGE 2 POUNDS PER DAY OR MORE OF AIR CONTAMINANTS, AS DEFINED BY HEALTH AND SAFETY CODE SECTION 39013, TO THE ATMOSPHERE MAY REQUIRE A PERMIT. PERMITS MAY BE REQUIRED FOR BOTH CONSTRUCTION AND OPERATION. DEVELOPERS/CONTRACTORS SHOULD CONTACT THE DISTRICT PRIOR TO CONSTRUCTION AND OBTAIN ANY NECESSARY PERMITS PRIOR TO THE ISSUANCE OF A BUILDING PERMIT. *(BASED ON THE CALIFORNIA HEALTH & SAFETY CODE SECTION 39013;* (NEED LINK)

L. D. STROBEL CO. INC.
DESIGN / CONSTRUCTION
WIRELESS COMMUNICATIONS
1022 SHARY CIRCLE, SUITE 9, CONCORD, CA. 94518
PHONE: 925-686-3241 FAX: 925-686-3350

REGISTERED PROFESSIONAL ENGINEER CONRAD L. ALFARO NO C28899 EXPIRE 3-31-25 CIVIL STATE OF CALIFORNIA

REVISIONS

NO.	DATE	DESCRIPTION
1	2/8/22	90% ZD
2	6/23/22	100% ZD/CD
3	7/25/22	100% ZD/CD Rev A
4	7/29/22	100% ZD/CD Rev B
5	8/20/23	100% ZD/CD FINAL
6	9/25/23	100% ZD/CD FINAL

SITE ADDRESS:
2001 STRAUCH DRIVE
ROSEVILLE, CA 95661
PLACER COUNTY
APN: 048-260-049

CITY OF ROSEVILLE
INFORMATION TECHNOLOGY
316 VERNON ST SUITE 300
ROSEVILLE, CA 95678

PROPOSED EQUIPMENT INSTALLATION
STRAUCH DRIVE

CITY OF ROSEVILLE CALIFORNIA

CITY OF ROSEVILLE STANDARD NOTES
SCALE: NONE

DRAWN: jjg DATE: 6/22/22
FILE: 9276-A1
SHEET NO.
G-3

CITY OF ROSEVILLE CALIFORNIA

DEVELOPMENT SERVICES – ENGINEERING LAND DEVELOPMENT
311 Vernon Street
Roseville, CA 95678 (916) 774-5339

PUBLIC IMPROVEMENTS REQUIREMENTS

EROSION / SEDIMENT CONTROL:

1. ALL EROSION AND SEDIMENT CONTROL MEASURES SHALL BE IMPLEMENTED BY OCTOBER 5 OR AS APPROVED BY THE CITY ENGINEER AND SPECIFIED ON THE GRADING PLANS.
2. STRAW BALES SHALL BE STOCKPILED ON SITE AT A RATE OF 1.5 BALES PER ACRE BY SEPTEMBER 25. MEASURES SHALL BE PROVIDED TO KEEP STRAW DRY.
3. ALL SLOPES GREATER THAN 10:1 SHALL BE COVERED WITH BROADCAST STRAW AT A RATE OF 50 BALES OR 4000 POUNDS PER ACRE. FOR SLOPES 4:1 OR STEEPER, STRAW SHALL BE PRESSED IN PLACE. THE ENGINEERING DIVISION SHALL APPROVE OTHER METHODS.
4. SLOPES STEEPER THAN 4:1 AND ADJACENT TO CITY RIGHT OF WAY, FLOOD PLAINS, NATURAL DRAINAGES, PARK LAND OR DESIGNATED OPEN SPACE SHALL BE HYDROSEEDED.
5. ALL BARE AREAS, REGARDLESS OF SLOPE, WITHIN 50 FEET OF NATURAL DRAINAGES SHALL BE COVERED WITH STRAW AND PRESSED IN PLACE.
6. WHERE REQUIRED, BROADCAST SEED SHALL BE APPLIED AS FOLLOWS:

   i. BLANDO BROME 12 LBS/ACRE
   ii. ROSE CLOVER 9 LBS/ACRE

7. AREAS WITH SANDY, DRY SOIL SHALL BE:

   i. ZORRO ANNUAL FESCUE 6 LBS/ACRE
   ii. ROSE CLOVER 9 LBS/ACRE

8. 16-20-0 FERTILIZER OR EQUIVALENT SHALL BE APPLIED AT A RATE OF 500 POUNDS PER ACRE. IF HYDROSEEDING/MULCHING IS USED, SEED QUANTITIES SHALL BE INCREASED BY 30 PERCENT.
9. NO GRADING OR TRENCHING, EXCEPT AS REQUIRED FOR EROSION OR SEDIMENT CONTROL, SHALL OCCUR WITHIN 35 FEET FROM THE CENTERLINE OF PERENNIAL AND INTERMITTENT DRAINAGE SWALES BETWEEN OCTOBER 5 AND APRIL 1 EXCEPT AS APPROVED BY THE DEPARTMENT OF FISH AND GAME.
10. ALL EROSION AND SEDIMENT CONTROL MEASURES SHALL BE CHECKED FOLLOWING ALL STORMS TO ENSURE THAT ALL MEASURES ARE FUNCTIONING PROPERLY.
11. SEDIMENT AND TRASH ACCUMULATED IN DRAINAGES OR DETENTION BASINS SHALL BE REMOVED AS SOON AS POSSIBLE. IN ADDITION, OIL AND MATERIAL FLOATING ON WATER SURFACE MUST BE SKIMMED WEEKLY AND THE DEBRIS PROPERLY DISPOSED OF.
12. CONSTRUCTION ACTIVITIES OCCURRING BETWEEN OCTOBER 15 AND APRIL 1 SHALL HAVE EROSION AND SEDIMENT CONTROL MEASURES IN PLACE OF CAPABLE OF BEING PLACED WITHIN 24 HOURS. THE CONTRACTOR SHALL ENSURE THAT THE CONSTRUCTION SITE IS PREPARED PRIOR TO THE ONSET OF ANY STORM.
13. THE CONTRACTOR SHALL ESTABLISH A SPECIFIC SITE WITHIN THE DEVELOPMENT FOR MAINTENANCE AND STORAGE OF EQUIPMENT OR ANY OTHER ACTIVITY THAT MAY ADVERSELY CONTRIBUTE TO THE WATER QUALITY OF THE RUNOFF. THIS AREA SHALL HAVE A BERM LOCATED AROUND ITS PERIMETER. THIS AREA SHALL BE RESTORED TO ACCEPTABLE CONDITION UPON COMPLETION OF PROJECT.
14. HYDROSEEDING MAY BE CONSIDERED AS AN ALTERNATIVE TO BROADCAST STRAW SUBJECT TO THE ENGINEERING DIVISION BASED ON A REVIEW OF THE EXISTING SITE CONDITIONS (LOCATION, SLOPES, PROXIMITY TO STREAMS, AND TIME OF YEAR.

E:\Develop\Standard Notes\Erosion/Sediment Control Non SWPPP Version REV. 2/23/05

CITY OF ROSEVILLE CALIFORNIA

DEVELOPMENT SERVICES – ENGINEERING LAND DEVELOPMENT
311 Vernon Street
Roseville, CA 95678 (916) 774-5339

PUBLIC IMPROVEMENTS REQUIREMENTS

TREE PRESERVATION:
(Notes required if grading is part of the tentative approved project and trees are conditioned to be saved)

1. GRADING AROUND TREES TO BE LIMITED TO OUTSIDE THE DRIPLINE. ANY TREE WELL GRADED SHOULD BE DRAINED TO SOME OUTFALL OR SWALE.
2. THE FOLLOWING CONDITIONS SHALL APPLY TO ENSURE THE PRESERVATION OF TREES:
   A. EACH TREE OR GROUP OF TREES TO BE SAVED SHALL BE FENCED BY A CHAIN-LINK FENCE PRIOR TO ANY GRADING OR MOVEMENT OF HEAVY EQUIPMENT OR ISSUANCE OF ANY PERMITS.
   B. FENCING SHALL BE LOCATED ONE FOOT (1') OUTSIDE THE DRIPLINE OF THE TREE OR TREES.
   C. SIGNS SHALL BE POSTED ON ALL SIDES OF SAID FENCES STATING:

   WARNING:
   THIS FENCE SHALL NOT BE REMOVED
   OR RELOCATED WITHOUT WRITTEN
   AUTHORIZATION FROM THE
   PLANING DEPARTMENT
3. THE GRADING PLAN FOR THE PROJECT HAS BEEN DESIGNED FOR NO GRADING TO OCCUR WITHIN THE DRIPLINE OF ANY OAK TREE UNLESS SPECIFICALLY APPROVED BY PLANNING DEPARTMENT AND SHOWN ON THESE PLANS. NO GRADES SHALL BE MODIFIED WITHOUT THE APPROVAL OF THE CIVIL ENGINEER AND THE CITY OF ROSEVILLE.
4. NO TRENCHING SHALL OCCUR BENEATH THE DRIPLINE OF ANY OAK TREE TO BE SAVED UNLESS STATED ON THESE PLANS "TRENCHING UNDER THIS TREE IS APPROVED".
5. PARKING OF VEHICLES AND EQUIPMENT OR STORAGE OF MATERIALS UNDER THE DRIPLINE OF TREES SHALL NOT OCCUR AT ANY TIME.

E:\Develop\Standard Notes\Tree Preservation REV. 2/23/05

General Fire Department Notes

1. An approved project sign shall be placed at vehicle access points into the project during construction to assist emergency responders. The sign shall identify the address, as approved by the City of Roseville. Such signs shall be clearly visible and legible from the street fronting the project.
2. Prior to combustible materials being brought to the site, fire apparatus access roads shall be provided to within 150 feet of all structures and combustible storage piles. **Fire apparatus access roads shall be fully paved and shall be designed to support the imposed weight of a fire apparatus (34 tons GVW), unless prior approval is obtained from the Fire Department for temporary access roads.** Access roads shall be provided with a minimum 20-foot roadway width and 13 foot 6 inch vertical clearance.
3. Prior to combustible materials being brought to the site, any required on-site fire hydrants shall be completed and accepted by the Roseville Fire Department.
4. Construction material and vehicles shall not obstruct fire apparatus access to fire apparatus roads, fire hydrants or the building.
5. Barricades shall be provided to protect any natural gas meter, fire hydrant, fire department control device, or other possible pertinent equipment or devices that may be subject to vehicular damage.
6. Provide and maintain a minimum 3-foot clear space around fire protection equipment.
7. The burning of combustible construction materials and trash is prohibited.
8. Asphalt and tar kettles shall not be located within 20 feet of any combustible material, combustible building surface or building opening. An attendant shall be within 100 feet of a kettle when the heat source is operating. A minimum of one (1) 20B:C portable fire extinguisher shall be located within 30 feet of the kettle, and on the roof during asphalt coating operations.
9. Drywall and other temporary heating devices shall be of an approved type, located away from combustible materials and attended and maintained at all times. Heating devices shall not be operated after normal working hours without being attended or on an hourly basis.
10. Cutting and welding operations shall conform to the *Hot Work* provisions of Chapter 35 of the Fire Code. A fire watch shall be provided during hot-work activities and shall continue for a minimum of 30 minutes after the conclusion of the work.
11. If site survey or earth moving work results in the discovery of hazardous materials in containers, or what appears to be hazardous wastes released into the ground, the contractor or applicant shall immediately report the finding to the Roseville Fire Department via phone at: (916) 774-5800. All suspected areas shall be marked off with approved signage or caution tape until such time that a representative from the Fire Department determines whether the release is reportable or not and if site remediation is required.
12. Fire safety during construction shall comply with Chapter 33 of the California Fire Code.
13. Adequate radio coverage shall be provided within buildings for public safety agencies as required by Fire Code.
14. Portable fire extinguishers shall be installed in occupancies and locations as set forth in the California Fire Code and as required by the Chief. Provide a minimum of one (1) portable fire extinguisher within each tenant space. The maximum travel distance to the fire extinguisher shall not exceed 75-feet. The minimum rating classification for the extinguisher shall be not less than 2A-10B:C. The maximum travel distance from any point in a **Light Hazard** area of Class A hazards shall not be more than 75 feet from a Class 2A-10B:C. fire extinguisher and one extinguisher shall be provided for each 6,000 square feet. The maximum travel distance from any point in an **Ordinary Hazard** of Class A hazards area shall not be more than 75 feet and one extinguisher shall be provided for each 3,000 square feet. The maximum travel distance to Class B extinguishers is either 30 feet or 50 feet depending upon the size of the extinguisher and the classification of the hazard. Refer to UFC Standard No. 10-1 for complete requirements. All portable fire extinguishers shall have a service tag affixed to them showing that the extinguisher has been serviced by a California State licensed fire extinguisher concern. All fire extinguishers shall be attached to a bracket or within an approved cabinet. Maximum distance from the floor shall not exceed 54-inches. Signage shall be posted above the extinguisher and shall read *Fire Extinguisher*.
15. The required minimum fire flow for the protection of the proposed project is ___ gallons per minute with 20 pounds per square inch residual water pressure remaining in the system. A change in any of the conditions may increase the required fire flow.
16. All underground fire line shall be hydraulically pressured at 200 psi for two-hours per the NFPA standard for underground fire water line. An inspection shall be required to witness the test with a subsequent inspection after the two-hour duration has expired.
17. Temporary use of on-site generators with over 60 gallons of diesel fuel shall require a fire department permit and must meet the requirements of the Chapter 6.95 of the Health and Safety Code, the Roseville Fire Department and the National Fire Codes. Contact the Fire Department at 916-774-5800 to initiate the permit application.
18. Section 10.6.2 of NFPA 24 has been amended so to allow mechanical joints under buildings. See Chapter 80 of the California Fire Code, Page 519. Provide detail of the proposed riser and underground detail to the pad.
19. Civil improvement plans shall be resubmitted if it has been determined by the applicant that an on-site fire pump will be required as the result of supplying 100 psi residual pressure at the standpipe roof outlet in accordance with NFPA 14, Standard for the Installation of Standpipe and Hose Systems.
20. The submittal private underground fire line shall be reviewed and approved by the **Environmental Utilities Department (EUD)** in conjunction with the **Fire Department (RFD)** prior to requesting for the required inspection from the RFD. The Fire Sprinkler Plans will not be approved by the RFD until the underground service lateral has been inspected and accepted by the RFD.
21. All proposed buried bolts shall be coated with a listed product such as Christy's HD-50.
22. According to NFPA 13, 6.3.1.1.1, the underground fire line cannot extend into the building further than 24 inches.
23. An 18 AWG minimum gauge tracer wire shall be installed along all non-metallic underground piping in accordance with Section 604 of the California Plumbing Code. Notations shall be made on the resubmittal.
24. Fire department connection(s) shall be within 2-feet of back of curb or back of walkway, and shall remain unobstructed at all times.
25. All fire department connections shall be labeled with the appropriate address.
26. Mechanical joints shall be installed at areas noted per the EBBA Thrust Restraint Design program specifications.
27. Conduits shall be installed and available for future monitoring of all fire protection devices.
28. All work shall be inspected by the fire department prior to installing ground materials.
29. To schedule a fire department inspection for any on-site work, follow the directions using the City of Roseville Citizen Portal at permitsonline.roseville.ca.us. The following BD number below shall be used when scheduling a fire department inspection. A BD number will be issued upon approval. All inquiring regarding inspections and permit fees shall be made by calling (916) 774-5331.
    BD_____.

CITY OF ROSEVILLE STANDARD NOTES
SCALE: NONE

PROJECT NUMBER: EN22-0684

L.D. STROBEL CO. INC.
DESIGN / CONSTRUCTION
WIRELESS COMMUNICATIONS
1022 SHARY CIRCLE, SUITE 9, CONCORD, CA. 94518
PHONE: 925-686-3241 FAX: 925-686-3350

REGISTERED PROFESSIONAL ENGINEER – DONALD L. STROBEL – NO C28998 – EXPIRES 3-31-23 – CIVIL – STATE OF CALIFORNIA

REVISIONS

NO.	DATE	DESCRIPTION
1	2/8/22	90% ZD
2	6/23/22	100% ZD/CD
3	7/25/22	100% ZD/CD Rev A
4	7/29/22	100% ZD/CD Rev B
5	8/20/23	100% ZD/CD FINAL
6	9/25/23	100% ZD/CD FINAL

SITE ADDRESS:
2001 STRAUCH DRIVE
ROSEVILLE, CA 95661
PLACER COUNTY
APN: 048-260-049

CITY OF ROSEVILLE
INFORMATION TECHNOLOGY
316 VERNON ST SUITE 300
ROSEVILLE, CA 95678

PROPOSED EQUIPMENT INSTALLATION
STRAUCH DRIVE

CITY OF ROSEVILLE CALIFORNIA

DRAWN: jjg DATE: 8/16/22
FILE: 9276-A1
SHEET NO.
G-4

PROJECT NUMBER: EN22-0684

CITY OF ROSEVILLE CALIFORNIA
DEVELOPMENT SERVICES – ENGINEERING LAND DEVELOPMENT
311 Vernon Street
Roseville, CA 95678 (916) 774-5359

PUBLIC IMPROVEMENTS REQUIREMENTS

GENERAL:

1. ALL CONSTRUCTION AND MATERIALS SHALL CONFORM TO THESE PLANS AND THE LATEST EDITION AND AMENDMENTS OF THE CITY OF ROSEVILLE DESIGN AND CONSTRUCTION STANDARDS.
2. THE CITY OF ROSEVILLE IS A MEMBER OF THE UNDERGROUND SERVICE ALERT (U.S.A.) ONE-CALL SYSTEM. THE CONTRACTORS SHALL NOTIFY THE U.S.A. CENTER 48 HOURS IN ADVANCE OF PERFORMING ANY EXCAVATION WORK BY CALLING 1-800-227-2600.
3. THE CONTRACTOR SHALL MARK IN WHITE PAINT ALL AREAS TO BE EXCAVATED PRIOR TO CONTACTING U.S.A. ANY AREAS NOT MARKED WILL NOT BE SUBJECT TO U.S.A., AND THE CONTRACTOR SHALL BE RESPONSIBLE FOR ANY DAMAGE RESULTING FROM EXCAVATION.
4. THE CONTRACTOR SHALL EXPOSE AND VERIFY LOCATIONS AND ELEVATIONS OF EXISTING UNDERGROUND UTILITIES PRIOR TO CONSTRUCTION OF THE NEW IMPROVEMENTS CONNECTING TO OR IN THE VICINITY OF THE SAME.
5. THE CONTRACTOR SHALL BE RESPONSIBLE FOR THE PROTECTION OF ALL EXISTING MONUMENTS AND OTHER SURVEY MARKERS ON THE JOB SITE.
6. THE CONTRACTOR SHALL PLACE BOXED SURVEY MONUMENTS WITH 1-1/2" BRONZE HEAD SET IN CONCRETE (STD. DWG. ST-35) AT LOCATIONS SHOWN ON THESE PLANS.
7. A.C. SURFACE SHALL BE CUT TO A NEAT, STRAIGHT LINE PARALLEL WITH THE STREET CENTERLINE AND THE EXPOSED EDGE SHALL BE TACKED WITH EMULSION PRIOR TO PAVING. THE EXPOSED BASE MATERIAL SHALL BE GRADED, RECOMPACTED, AND RESEALED PRIOR TO PAVING.
8. ANY EXISTING CONCRETE SURFACE TO BE REMOVED SHALL BE SAW CUT TO A NEAT, STRAIGHT LINE.
9. THE CONTRACTOR SHALL SUBMIT A TRAFFIC CONTROL PLAN THAT SHALL BE ACCEPTED BY THE ENGINEERING DIVISION OF PUBLIC WORKS BEFORE START OF WORK IN RIGHT-OF-WAY AND SHALL BE IN ACCORDANCE WITH CALIFORNIA MUTCD LATEST EDITION. AT LEAST ONE LANE IN EACH DIRECTION SHALL REMAIN OPEN TO TRAFFIC UNLESS OTHERWISE SHOWN ON THE PLANS. TRAFFIC CONTROL HOURS ARE SUBJECT TO LIMITATION BY THE CITY. TRAFFIC CONTROL WITH LANE CLOSURES THAT AFFECT TRAFFIC FLOW MAY REQUIRE NIGHT WORK. IF, AS A PART OF TRAFFIC CONTROL MEASURES, A ROADWAY CLOSURE HAS BEEN APPROVED, THE CONTRACTOR SHALL NOTIFY DEVELOPMENT SERVICES CONSTRUCTION INSPECTOR 72 HOURS IN ADVANCE OF SETTING UP THIS CLOSURE.
10. CURB RAMPS CONFORMING TO ALL ADA AND TITLE 24 REQUIREMENTS SHALL BE PLACED AT ALL NEW STANDARD CURB RETURNS (STANDARD DRAWING ST-27) AND STANDARD TYPE A-7 DRIVEWAYS. WHERE EXISTING RAMPS DO NOT MEET CURRENT ADA AND TITLE 24 REQUIREMENTS, THE RAMPS SHALL BE UPGRADED IN CONFORMANCE WITH MINIMUM TITLE 24 REQUIREMENTS. WHERE EXISTING RAMPS DO NOT INCLUDE DETECTABLE WARNING PANELS (TRUNCATED DOMES), PANELS SHALL BE RETROFITTED PER THE CONSTRUCTION STANDARDS.
11. DRAIN INLETS NOT WITHIN A PAVED AREA SHALL HAVE A 12" WIDE COLLAR OF 8" THICK P.C.C. OR 2" THICK A.C.
12. PRIOR TO THE CERTIFICATE OF COMPLETION ON ALL SINGLE-FAMILY RESIDENTIAL SUBDIVISIONS, THE DEVELOPER SHALL SUBMIT A LETTER FROM THE POST OFFICE STATING THAT ITS REQUIREMENTS FOR MAILBOX CLUSTER PADS HAVE BEEN SATISFIED.
13. ALL UNDERGROUND UTILITIES WITHIN EXISTING OR PROPOSED CITY OF ROSEVILLE EASEMENTS SHALL REQUIRE A MINIMUM OF 90% COMPACTION ON THE TRENCH BACKFILL. COMPACTION OF BACKFILL BY JETTING IS NOT PERMITTED IN CITY OF ROSEVILLE RIGHT OF WAY AND EASEMENT AREAS OR WITHIN DEDICATED RECLAIMED WATER, STORM, SEWER OR WATER EASEMENTS AND MAINS.
14. THE CONTRACTOR SHALL CONDUCT A PRE-CONSTRUCTION MEETING ONE-WEEK PRIOR TO STARTING WORK. MEMBERS OF THE CITY OF ROSEVILLE DEVELOPMENT SERVICES DEPARTMENT, ENVIRONMENTAL UTILITIES DEPARTMENT AND ALL OTHER UTILITY REPRESENTATIVES SHALL BE NOTIFIED BY THE CONTRACTOR AS TO THE DATE AND LOCATION OF THE MEETING.
15. PRIOR TO EXCAVATION OF TRENCHES 5 FEET OR DEEPER, THE CONTRACTOR SHALL SUBMIT TO THE DEVELOPMENT SERVICES DEPARTMENT OR ENVIRONMENTAL UTILITIES DEPARTMENT INSPECTOR A COPY OF THE COMPANY'S ANNUAL CALOSHA TRENCHING PERMIT AND A COPY OF THE COMPANY'S LETTER INFORMING CALOSHA OF THE TIME THE TRENCHING IS COMMENCING AND THE LOCATION OF THE WORK.
16. ALL PAINTED TRAFFIC STRIPES, ARROWS, AND PAVEMENT MARKINGS SHALL BE CONSTRUCTED WITH THERMOPLASTIC MATERIAL TO THE SPECIFICATIONS SET FORTH IN CHAPTER 3 OF THE CALIFORNIA MUTCD LATEST EDITION. NON-REFLECTIVE PAVEMENT MARKERS SHALL CONSIST OF CERAMIC MARKERS ONLY CONFORMING TO CHAPTER 3 OF THE CALIFORNIA MUTCD LATEST EDITION.
17. THE DEVELOPERS CONTRACTOR SHALL TAKE EXTREME CARE TO PROTECT EXISTING SITE AND ADJACENT IMPROVEMENTS FROM DAMAGE. THE CONTRACTOR SHALL BE RESPONSIBLE TO REPAIR OR MAKE REPLACEMENT OF ALL CRACKED AND OTHERWISE PRE-EXISTING DAMAGED PUBLIC IMPROVEMENTS ALONG THE FRONTAGE OF THE PROJECT SITE AND ANY DAMAGE RESULTING FROM CONSTRUCTION TO CURRENT CITY STANDARDS AND AT THEIR OWN EXPENSE. THE EXTENT OF THE REPAIRS SHALL BE DETERMINED BY THE DEVELOPMENT SERVICES CONSTRUCTION INSPECTOR AND SHALL BE COMPLETED PRIOR TO THE CITY ACCEPTANCE OF THE IMPROVEMENTS.
18. WHERE COMBINATIONS OF SIDEWALK OR CURB AND GUTTER ARE PLACED CONTIGUOUS TO EXISTING, ALL ADJOINING EXISTING CONCRETE VERTICAL FACES SHALL BE DOWELED. ALL ABUTTING SIDEWALK ENDS SHALL BE DOWELED MID-SECTION VERTICALLY WITH TWO DOWELS FOR FOUR THROUGH SIX-FOOT WIDE SIDEWALK AND THREE DOWELS FOR WIDER SIDEWALK. ABUTTING CURB AND GUTTER ENDS SHALL BE DOWELED TWICE, 18 INCHES APART AT GUTTER PAN MID-SECTION. DOWEL CONNECTIONS OF LONGITUDINAL RUNS OF SIDEWALK TO BACK OF CURB SHALL BE THREE FEET ON CENTER. ALL DOWELS SHALL BE 16 INCHES LONG, GRADE 60, #4 REBAR PENETRATING FOUR INCHES. THE DOWEL HOLE SHALL BE 5/8-INCH DIAMETER AT A SLIGHT HORIZONTAL ANGLE FROM PERPENDICULAR. THE PENETRATING PORTION OF THE DOWEL AND THE ENTIRE (CLEANED) VERTICAL SURFACE OF THE ADJOINING,

ADA AND TITLE 24 REQUIREMENTS, THE RAMPS SHALL BE UPGRADED IN CONFORMANCE WITH MINIMUM TITLE 24 REQUIREMENTS. WHERE EXISTING RAMPS DO NOT INCLUDE DETECTABLE WARNING PANELS (TRUNCATED DOMES), PANELS SHALL BE RETROFITTED PER THE CONSTRUCTION STANDARDS.

11. DRAIN INLETS NOT WITHIN A PAVED AREA SHALL HAVE A 12" WIDE COLLAR OF 8" THICK P.C.C. OR 2" THICK A.C.

12. PRIOR TO THE CERTIFICATE OF COMPLETION ON ALL SINGLE-FAMILY RESIDENTIAL SUBDIVISIONS, THE DEVELOPER SHALL SUBMIT A LETTER FROM THE POST OFFICE STATING THAT ITS REQUIREMENTS FOR MAILBOX CLUSTER PADS HAVE BEEN SATISFIED.

13. ALL UNDERGROUND UTILITIES WITHIN EXISTING OR PROPOSED CITY OF ROSEVILLE EASEMENTS SHALL REQUIRE A MINIMUM OF 90% COMPACTION ON THE TRENCH BACKFILL. COMPACTION OF BACKFILL BY JETTING IS NOT PERMITTED IN CITY OF ROSEVILLE RIGHT OF WAY AND EASEMENT AREAS OR WITHIN DEDICATED RECLAIMED WATER, STORM, SEWER OR WATER EASEMENTS AND MAINS.

14. THE CONTRACTOR SHALL CONDUCT A PRE-CONSTRUCTION MEETING ONE-WEEK PRIOR TO STARTING WORK. MEMBERS OF THE CITY OF ROSEVILLE DEVELOPMENT SERVICES DEPARTMENT, ENVIRONMENTAL UTILITIES DEPARTMENT AND ALL OTHER UTILITY REPRESENTATIVES SHALL BE NOTIFIED BY THE CONTRACTOR AS TO THE DATE AND LOCATION OF THE MEETING.

15. PRIOR TO EXCAVATION OF TRENCHES 5 FEET OR DEEPER, THE CONTRACTOR SHALL SUBMIT TO THE DEVELOPMENT SERVICES DEPARTMENT OR ENVIRONMENTAL UTILITIES DEPARTMENT INSPECTOR A COPY OF THE COMPANY'S ANNUAL CALOSHA TRENCHING PERMIT AND A COPY OF THE COMPANY'S LETTER INFORMING CALOSHA OF THE TIME THE TRENCHING IS COMMENCING AND THE LOCATION OF THE WORK.

16. ALL PAINTED TRAFFIC STRIPES, ARROWS, AND PAVEMENT MARKINGS SHALL BE CONSTRUCTED WITH THERMOPLASTIC MATERIAL TO THE SPECIFICATIONS SET FORTH IN CHAPTER 3 OF THE CALIFORNIA MUTCD LATEST EDITION. NON-REFLECTIVE PAVEMENT MARKERS SHALL CONSIST OF CERAMIC MARKERS ONLY CONFORMING TO CHAPTER 3 OF THE CALIFORNIA MUTCD LATEST EDITION.

17. THE DEVELOPERS CONTRACTOR SHALL TAKE EXTREME CARE TO PROTECT EXISTING SITE AND ADJACENT IMPROVEMENTS FROM DAMAGE. THE CONTRACTOR SHALL BE RESPONSIBLE TO REPAIR OR MAKE REPLACEMENT OF ALL CRACKED AND OTHERWISE PRE-EXISTING DAMAGED PUBLIC IMPROVEMENTS ALONG THE FRONTAGE OF THE PROJECT SITE AND ANY DAMAGE RESULTING FROM CONSTRUCTION TO CURRENT CITY STANDARDS AND AT THEIR OWN EXPENSE. THE EXTENT OF THE REPAIRS SHALL BE DETERMINED BY THE DEVELOPMENT SERVICES CONSTRUCTION INSPECTOR AND SHALL BE COMPLETED PRIOR TO THE CITY ACCEPTANCE OF THE IMPROVEMENTS.

18. WHERE COMBINATIONS OF SIDEWALK OR CURB AND GUTTER ARE PLACED CONTIGUOUS TO EXISTING, ALL ADJOINING EXISTING CONCRETE VERTICAL FACES SHALL BE DOWELED. ALL ABUTTING SIDEWALK ENDS SHALL BE DOWELED MID-SECTION VERTICALLY WITH TWO DOWELS FOR FOUR THROUGH SIX-FOOT WIDE SIDEWALK AND THREE DOWELS FOR WIDER SIDEWALK. ABUTTING CURB AND GUTTER ENDS SHALL BE DOWELED TWICE, 18 INCHES APART AT GUTTER PAN MID-SECTION. DOWEL CONNECTIONS OF LONGITUDINAL RUNS OF SIDEWALK TO BACK OF CURB SHALL BE THREE FEET ON CENTER. ALL DOWELS SHALL BE 16 INCHES LONG, GRADE 60, #4 REBAR PENETRATING FOUR INCHES. THE DOWEL HOLE SHALL BE 5/8-INCH DIAMETER AT A SLIGHT HORIZONTAL ANGLE FROM PERPENDICULAR. THE PENETRATING PORTION OF THE DOWEL AND THE ENTIRE (CLEANED) VERTICAL SURFACE OF THE ADJOINING,

CITY OF ROSEVILLE STANDARD NOTES
SCALE: NONE

L.D. STROBEL CO. INC.
DESIGN / CONSTRUCTION
WIRELESS COMMUNICATIONS
1022 SHARY CIRCLE, SUITE 9, CONCORD, CA. 94518
PHONE: 925-686-3241 FAX: 925-686-3350

REGISTERED PROFESSIONAL ENGINEER – RICHARD L. ALLEN – No C28998 – EXPIRES 3-31-23 – CIVIL – STATE OF CALIFORNIA

REVISIONS

NO.	DATE	DESCRIPTION
1	2/8/22	90% ZD
2	6/23/22	100% ZD/CD
3	7/25/22	100% ZD/CD Rev A
4	7/29/22	100% ZD/CD Rev B
5	8/20/23	100% ZD/CD FINAL
6	9/25/23	100% ZD/CD FINAL

SITE ADDRESS:
2001 STRAUCH DRIVE
ROSEVILLE, CA 95661
PLACER COUNTY
APN: 048-260-049

CITY OF ROSEVILLE
INFORMATION TECHNOLOGY
316 VERNON ST SUITE 300
ROSEVILLE, CA 95678

PROPOSED EQUIPMENT INSTALLATION
STRAUCH DRIVE

CITY OF ROSEVILLE CALIFORNIA

DRAWN: jjg DATE: 8/18/22
FILE: 9276-A1
SHEET NO.
G-5

CITY OF ROSEVILLE — DEVELOPMENT SERVICES – ENGINEERING LAND DEVELOPMENT
311 Vernon Street
Roseville, CA 95678 (916) 774-5339

GENERAL NOTES:

1. ALL WORK SHALL CONFORM TO THE LATEST EDITIONS OF THE CITY OF ROSEVILLE CONSTRUCTION AND IMPROVEMENTS STANDARDS (INCLUDING THE LATEST AMENDMENTS), STANDARD CONSTRUCTIONS SPECIFICATIONS, CALTRANS STANDARD SPECIFICATIONS AND PLANS FOR CONSTRUCTION OF LOCAL STREETS AND ROADS DATED 2002 (ENGLISH UNITS), AND THE LATEST ADDITION OF THE CMUTCD.

2. THE CONTRACTOR AGREES THAT, IN ACCORDANCE WITH GENERALLY ACCEPTED CONSTRUCTION PRACTICES, THE CONTRACTOR WILL BE REQUIRED TO ASSUME SOLE AND COMPLETE RESPONSIBILITY FOR JOB SITE CONDITIONS DURING THE COURSE OF CONSTRUCTION OF THE PROJECT, INCLUDING SAFETY OF ALL PERSONS AND PROPERTY. THIS REQUIREMENT SHALL BE MADE TO APPLY CONTINUOUSLY AND NOT BE LIMITED TO NORMAL WORKING HOURS. THE CONTRACTOR FURTHER AGREES TO DEFEND, INDEMNIFY AND HOLD OWNER AND ENGINEER HARMLESS FROM ANY AND ALL LIABILITY, REAL OR ALLEGED, IN CONNECTION WITH THE PERFORMANCE OF WORK ON THIS PROJECT, EXEMPTING LIABILITY ARISING FROM THE NEGLIGENCE OF ENGINEER.

3. IT IS THE RESPONSIBILITY OF THE CONTRACTOR TO OBTAIN PERMITS NECESSARY TO PERFORM THE WORK SHOWN ON THESE PLANS FROM THE APPROPRIATE AGENCIES. REFER TO THE SPECIAL PROVISIONS FOR PERMITS NEEDED.

4. THESE PLANS ARE HEREBY MADE PART OF THE CONTRACT SPECIFICATIONS FOR THIS PROJECT.

VERIFICATION-LOCATION:

5. THE CONTRACTOR SHALL BE RESPONSIBLE FOR VERIFICATION OF ALL EXISTING UNDERGROUND UTILITIES, WHETHER OR NOT THEY ARE SHOWN ON THESE PLANS. THE CONTRACTOR SHALL CONTACT U.S.A. AND HAVE UTILITIES MARKED AT LEAST 72 HOURS BEFORE BEGINNING WORK. WHERE MARKINGS ARE NEAR PROPOSED FOUNDATIONS THE CONTRACTOR SHALL LOCATE UNDERGROUND UTILITIES BY POT HOLING PRIOR TO EXCAVATING.

6. THE CONTRACTOR IS SOLELY RESPONSIBLE TO PROVIDE ALL LABOR AND EQUIPMENT NECESSARY TO LOCATE EXISTING UNDERGROUND FACILITIES BEYOND THE INFORMATION PROVIDED BY U.S.A. MARKING INCLUDE, BUT NOT LIMITED TO, METAL DETECTORS, WIRE LOCATIONS (OR WIRE LOCATING EQUIPMENT), AND POTHOLING.

7. LOCATIONS OF SIGNAL STANDARDS, CONTROLLERS, SERVICE PEDESTALS, PULL BOXES AND LOOP DETECTORS AS SHOWN ON THESE PLANS ARE APPROXIMATE. THE CONTRACTOR SHALL LOCATE THESE ITEMS AND THE ENGINEER SHALL APPROVE SAID LOCATIONS PRIOR TO EXCAVATION.

8. IN CASE OF BORING, CONTRACTOR SHALL VERIFY LOCATIONS AND ELEVATIONS OF EXISTING UNDERGROUND UTILITIES PRIOR TO CONSTRUCTION.

TRAFFIC CONTROL PLANS:

9. TRAFFIC CONTROL SHALL BE PER THE LATEST ADDITION OF THE CMUTCD. AT LEAST ONE LANE IN EACH DIRECTION SHALL REMAIN OPEN TO TRAFFIC UNLESS OTHERWISE SHOWN ON THE PLANS. TRAFFIC CONTROL HOURS ARE SUBJECT TO LIMITATION BY THE CITY. TRAFFIC CONTROL WITH LANE CLOSURES THAT AFFECT

   TRAFFIC FLOW MAY REQUIRE NIGHT WORK. IF, AS A PART OF TRAFFIC CONTROL MEASURES, A ROADWAY CLOSURE HAS BEEN APPROVED, THE CONTRACTOR SHALL NOTIFY ENGINEERING DIVISION 72 HOURS IN ADVANCE OF SETTING UP THIS CLOSURE.

10. THE CONTRACTOR SHALL BE REQUIRED TO SUBMIT A WRITTEN TRAFFIC CONTROL PLAN REQUESTING TO DISCONNECT OR DISABLE ANY TRAFFIC SIGNAL LOOP OR SIGNAL INTERCONNECT WIRE. THIS WRITTEN NOTIFICATION SHALL INCLUDE DATE AND TIME OF DISCONNECT, DESCRIPTION OF WORK, INCLUDING LOOP INPUTS IF APPLICABLE, CONTACT PERSON, AND ESTIMATED DATE OF RECONNECTION. THIS REQUEST SHALL BE ON COMPANY LETTERHEAD, FAX OR VIA COMPANY E-MAIL UPON APPROVAL OF REQUEST, THE CONTRACTOR SHALL NOTIFY THE INSPECTOR 48 HOURS PRIOR TO WORK TO VERIFY SCHEDULE. A COPY OF THE APPROVED REQUEST SHALL BE GIVEN TO THE SIGNAL TECHNICIAN DISCONNECTING THE REQUESTED SYSTEM. THIS COPY IS TO BE PLACED IN THE NEAREST CONTROLLER CABINET DURING THE COURSE WORK. REQUEST TO DISCONNECT OR DISABLE ANY TRAFFIC SIGNAL SYSTEM FOR A PERIOD LONGER THAN FIVE (5) WORKING DAYS WILL NOT BE APPROVED.

11. THE CONTRACTOR SHALL BE REQUIRED TO SUBMIT A WRITTEN TRAFFIC CONTROL PLAN IF ANY (PARTIAL OR FULL) LANE CLOSURE IS NECESSARY. THIS WRITTEN NOTIFICATION SHALL INCLUDE DATE AND TIME, DESCRIPTION OF WORK, CONTACT PERSON AND ESTIMATED DATE OF COMPLETION. THIS REQUEST SHALL BE ON COMPANY LETTERHEAD, FAX, OR VIA COMPANY E-MAIL. THE CONTRACTOR SHALL NOTIFY THE ENGINEERING DIVISION 72 HOURS IN ADVANCE OF SETTING UP THE CLOSURE. UPON APPROVAL OF REQUEST, THE CONTRACTOR SHALL NOTIFY THE INSPECTOR 48 HOURS PRIOR TO WORK TO VERIFY SCHEDULE.

12. THE CONTRACTOR SHALL PROVIDE ALL LIGHTS, SIGNS, BARRICADES, FLAGGERS OR OTHER DEVICES NECESSARY TO PROVIDE SAFETY.

13. THE CONTRACTOR SHALL POST EMERGENCY TELEPHONE NUMBERS FOR POLICE, FIRE, AMBULANCE, AND THOSE AGENCIES RESPONSIBLE FOR MAINTENANCE OF UTILITIES IN THE VICINITY OF JOB SITE.

A.C./CONCRETE-PAVEMENT WORK:

14. A.C. SURFACE SHALL BE CUT TO A NEAT, STRAIGHT LINE PARALLEL WITH THE STREET CENTERLINE AND THE EXPOSED EDGE SHALL BE TACKED WITH EMULSION PRIOR TO PAVING. THE EXPOSED BASE MATERIAL SHALL BE GRADED, RECOMPACTED, AND RESEALED PRIOR TO PAVING.

15. ANY EXISTING CONCRETE SURFACE TO BE REMOVED SHALL BE SAW CUT TO A NEAT, STRAIGHT LINE.

16. ALL CONCRETE TO BE USED IN CURBS, DRIVEWAYS, BIKE PATHS AND SIDEWALKS SHALL BE CLASS A (6 SACK).

17. THE CONTRACTOR SHALL BE RESPONSIBLE FOR THE PROTECTION OF ALL EXISTING MONUMENTS AND OTHER SURVEY MARKERS ON THE JOB SITE.

SUBGRADE:

18. THE CONTRACTOR SHALL MARK IN WHITE PAINT ALL AREAS TO BE EXCAVATED PRIOR TO CONTACTING U.S.A. ANY AREAS NOT MARKED WILL NOT BE SUBJECT TO

    U.S.A. AND THE CONTRACTOR SHALL BE RESPONSIBLE FOR ANY DAMAGE RESULTING FROM EXCAVATION.

19. ALL UNDERGROUND UTILITIES WITHIN EXISTING OR PROPOSED CITY OF ROSEVILLE EASEMENTS SHALL REQUIRE A MINIMUM OF 90% COMPACTION ON THE TRENCH BACKFILL. COMPACTION OF BACKFILL BY JETTING IS NOT PERMITTED IN CITY OF ROSEVILLE RIGHT OF WAY AREAS OR WITHIN DEDICATED RECLAIMED WATER, STORM, SEWER OR WATER EASEMENTS AND MAINS.

20. THE UPPER SIX (6) INCHES OF THE SUB GRADE SHALL BE COMPACTED TO 95% MINIMUM RELATIVE COMPACTION.

21. PRIOR TO EXCAVATION OF TRENCHES 5 FEET OR DEEPER, THE CONTRACTOR SHALL SUBMIT TO THE PUBLIC WORKS DEPARTMENT OR ENVIRONMENTAL UTILITIES DEPARTMENT INSPECTOR A COPY OF THE COMPANY'S ANNUAL CALOSHA TRENCHING PERMIT AND A COPY OF THE COMPANY'S LETTER INFORMING CALOSHA OF THE TIME THE TRENCHING IS COMMENCING AND THE LOCATION OF THE WORK.

22. NO TRENCHING SHALL OCCUR BENEATH THE DRIP LINE OF ANY OAK TREE TO BE SAVED UNLESS STATED ON THESE PLANS "TRENCHING UNDER THIS TREE IS APPROVED".

SIGNAL:

23. THE CONTRACTOR SHALL PROVIDE AND INSTALL ALL EQUIPMENT AND MATERIALS NECESSARY FOR THE SIGNAL TO OPERATE AS SHOWN IN THE PHASE DIAGRAM, EXCEPT AS NOTED IN THE SPECIAL PROVISIONS.

24. ALL SIGNAL SECTIONS SHALL HAVE FULL CIRCLE VISORS.

25. MOUNT VIDEO PAN, TILT, ZOOM CAMERA BELOW LUMINAIRE MAST ARM AS DIRECTED BY CITY ENGINEER.

26. SIGNAL HEADS TO REMAIN DARK FOR MORE THAN ONE MONTH SHALL BE COVERED WITH A COMMERCIALLY AVAILABLE SIGNAL HEAD COVER. BURLAP SACKS AND/OR PLYWOOD WILL NOT BE ALLOWED.

27. FOR SIGNALS BEING INSTALLED AS A DEVELOPER OBLIGATION, THE CITY SHALL SUPPLY EQUIPMENT AS OUTLINED IN THE CITY'S STANDARDS AT THE DEVELOPER'S COST. FULL PAYMENT IS REQUIRED PRIOR TO THE RELEASE OF THE EQUIPMENT.

28. ALL LOOP DETECTOR HANDHOLES (DHH'S) SHALL BE INSTALLED ON THE LANE LINES. EACH DHH SHALL BE CONNECTED TO ITS OWN UNIQUE CONDUIT THAT RUNS DIRECTLY FROM THE DHH TO A NUMBER 6 PULL BOX LOCATED IN THE SIDEWALK, ADJACENT TO THE DHH IN THE SAME DIRECTION OF TRAVEL. NO MULTIPLE DHH'S SHALL BE ALLOWED THAT ARE CONNECTED TO THE SAME CONDUIT RUN.

29. ALL DHH'S SHALL BE INSTALLED PER THE STATE OF CALIFORNIA STANDART PLANS, DATED JULY 2002, DRAWING ES-5E, TYPE B DETECTOR HANDHOLE DETAILS.

SIGNING-STRIPING:

30. THE CONTRACTOR SHALL BE RESPONSIBLE FOR PROVIDING AND MAINTAINING ALL CONSTRUCTION SIGNING AS REQUIRED BY THE LATEST EDITION OF THE CMUTCD TO DELINEATE CONSTRUCTION HAZARDS AT HIS OWN EXPENSE.

31. ALL TRAFFIC STRIPES AND PAVEMENT LEGENDS SHALL BE THERMOPLASTIC.

32. SIGNING AND STRIPING DETAILS REFER TO THOSE SHOWN IN THE LATEST EDITION OF THE CMUTCD.

33. LOCATIONS OF SIGNING AND STRIPING AS SHOWN ON THESE PLANS ARE APPROXIMATE. THE CONTRACTOR SHALL LOCATE THESE ITEMS AND THE ENGINEER SHALL APPROVE SAID LOCATIONS PRIOR TO CONSTRUCTION/INSTALLATION.

34. THE CONTRACTOR SHALL REMOVE ALL EXISTING NON-CONFORMING STRIPING AS DIRECTED BY THE ENGINEER AND ALL EXISTING STRIPING THAT CONFLICTS WITH THE PROPOSED STRIPING.

EROSION CONTROL:

35. EXCAVATIONS SHALL BE ADEQUATELY SHORED, BRACED AND SHEETED SO THAT THE EARTH WILL NOT SLIDE OR SETTLE AND SO THAT ALL EXISTING IMPROVEMENTS OF ANY KIND WILL BE FULLY PROTECTED FROM DAMAGE. ANY DAMAGE RESULTING FROM A LACK OF ADEQUATE SHORING, BRACING AND SHEETING, SHALL BE THE RESPONSIBILITY OF THE CONTRACTOR AND HE SHALL EFFECT NECESSARY REPAIRS OR RECONSTRUCTION AT HIS OWN EXPENSE. THE CONTRACTOR SHALL PROVIDE ADEQUATE SHEETING, SHORING, AND BRACING OR EQUIVALENT METHOD, FOR THE PROTECTION OF LIFE, OR LIMB, WHICH SHALL CONFORM TO THE APPLICABLE CONSTRUCTION SAFETY ORDERS OF THE DIVISION OF INDUSTRIAL SAFETY OF THE STATE OF CALIFORNIA. THE CONTRACTOR SHALL ALWAYS COMPLY WITH OSHA REQUIREMENTS AND SHALL PROVIDE CITY OF ROSEVILLE WITH A COPY OF OSHA PERMIT.

36. CONSTRUCTION ACTIVITIES OCCURRING BETWEEN OCTOBER 15 AND APRIL 1 SHALL HAVE EROSION AND SEDIMENT CONTROL MEASURES IN PLACE OR CAPABLE OF BEING PLACED WITHIN 24 HOURS. THE CONTRACTOR SHALL ENSURE THAT THE CONSTRUCTION SITE IS PREPARED PRIOR TO THE ONSET OF ANY STORM.

37. ADJACENT STREET FRONTAGES SHALL BE SWEPT AT LEAST ONCE A DAY TO REMOVE SILT AND OTHER DIRT WHICH IS EVIDENT FROM CONSTRUCTION ACTIVITIES.

38. THE CONTRACTOR SHALL MEET AND FOLLOW ALL NPDES REQUIREMENTS IN EFFECT AT THE TIME OF CONSTRUCTION.

RESTORATION:

39. ALL EXISTING UTILITIES AND IMPROVEMENTS, INCLUDING SUBSTRUCTURES, THAT ARE DAMAGED BY THE CONTRACTOR, WHICH ARE NOT DESIGNATED BY THE PLANS OR SPECIFICATIONS TO BE DISTURBED, SHALL BE RESTORED OR REPAIRED TO THE SATISFACTION OF THE ENGINEER AT THE CONTRACTOR'S EXPENSE.

40. CONTRACTOR SHALL RESTORE ALL DISTURBED LANDSCAPING AND IRRIGATION SYSTEMS TO ORIGINAL CONDITION AND/OR REDESIGN AND INSTALL IRRIGATION TO ACCOMMODATE NEW STRUCTURES WITHIN THIS PROJECT.

41. THE DEVELOPERS CONTRACTOR SHALL TAKE EXTREME CARE TO PROTECT EXISTING SITE AND ADJACENT IMPROVEMENTS FROM DAMAGE. THE CONTRACTOR SHALL BE RESPONSIBLE TO REPAIR OR MAKE REPLACEMENT OF ALL CRACKED

    AND OTHERWISE PRE-EXISTING DAMAGED PUBLIC IMPROVEMENTS ALONG THE FRONTAGE OF THE PROJECT SITE AND ANY DAMAGE RESULTING FROM CONSTRUCTION TO CURRENT CITY STANDARDS AND AT THEIR OWN EXPENSE. THE EXTENT OF THE REPAIRS SHALL BE DETERMINED BY THE PUBLIC WORKS INSPECTOR AND SHALL BE COMPLETED PRIOR TO THE CITY ACCEPTANCE OF THE IMPROVEMENTS.

MISC.:

42. THE CONTRACTOR SHALL CONDUCT A PRE-CONSTRUCTION MEETING ONE-WEEK PRIOR TO STARTING WORK. MEMBERS OF THE CITY OF ROSEVILLE ENGINEERING DIVISION, ENVIRONMENTAL UTILITIES DEPARTMENT, AND ALL OTHER UTILITY REPRESENTATIVES SHALL BE NOTIFIED BY THE CONTRACTOR AS TO THE DATE AND LOCATION OF THE MEETING.

43. SHOULD IT APPEAR THAT THE WORK TO BE DONE OR ANY MATTER RELATIVE THERETO IS NOT SUFFICIENTLY DETAILED OR EXPLAINED ON THESE PLANS, THE CONTRACTOR SHALL REQUEST IN WRITING FROM THE ENGINEER SUCH FURTHER EXPLANATION AS MAY BE NECESSARY.

44. PARKING OF VEHICLES AND EQUIPMENT OR STORAGE OF MATERIALS UNDER THE DRIPLINE OF TREES SHALL NOT OCCUR AT ANY TIME.

BEFORE EXCAVATING CALL U.S.A.
UNDERGROUND SERVICE ALERT 1-800-642-2444

PROJECT NOTES: (THIS SHEET ONLY) ...ON LOOP & PHASE DIAGRAM PLAN SHEET

INSTALL CITY-FURNISHED MODEL 2070 CONTROLLER AND COMMUNICATION HUB IN CITY SUPPLIED NEMA TYPE P CABINET.

INSTALL CITY-FURNISHED TESCO TYPE 27-22 SERVICE EQUIPMENT ENCLOSURE WITH BATTERY BACKUP SYSTEM OR APPROVED EQUIVALENT.

CONSTRUCT P.C.C. PAD FOR CONTROLLER AND SERVICE CABINET. SEE DETAIL ON SHEET_.

INSTALL 4-SECTION SIGNAL HEAD. SEE DETAIL ON THIS SHEET.

FURNISH AND INSTALL GELCORE 16" PEDESTRIAN COUNTDOWN SIGNAL HEAD, MODEL # PS7-CFF1-01A-18, OR APPROVED EQUIVALENT.

REMOVE AND SALVAGE EXISTING STREET LIGHT. MAINTAIN EXISTING STREET LIGHTING CIRCUITS.

PROJECT NUMBER: EN22-0684

L. D. STROBEL CO. INC.
DESIGN / CONSTRUCTION
WIRELESS COMMUNICATIONS
1022 SHARY CIRCLE, SUITE 9, CONCORD, CA. 94518
PHONE: 925-686-3241 FAX: 925-686-3350

REGISTERED PROFESSIONAL ENGINEER CONRAD L. ALFARO NO C28899 EXPIRE 3-31-25 CIVIL STATE OF CALIFORNIA

REVISIONS

NO.	DATE	DESCRIPTION
1	2/8/22	90% ZD
2	6/23/22	100% ZD/CD
3	7/25/22	100% ZD/CD Rev A
4	7/29/22	100% ZD/CD Rev B
5	8/20/23	100% ZD/CD FINAL
6	9/25/23	100% ZD/CD FINAL

SITE ADDRESS:
2001 STRAUCH DRIVE
ROSEVILLE, CA 95661
PLACER COUNTY
APN: 048-260-049

CITY OF ROSEVILLE
INFORMATION TECHNOLOGY
316 VERNON ST SUITE 300
ROSEVILLE, CA 95678

PROPOSED EQUIPMENT INSTALLATION
STRAUCH DRIVE

CITY OF ROSEVILLE CALIFORNIA

CITY OF ROSEVILLE STANDARD NOTES
SCALE: NONE

DRAWN: jjg DATE: 8/18/22
FILE: 9276-A1
SHEET NO.
G-6

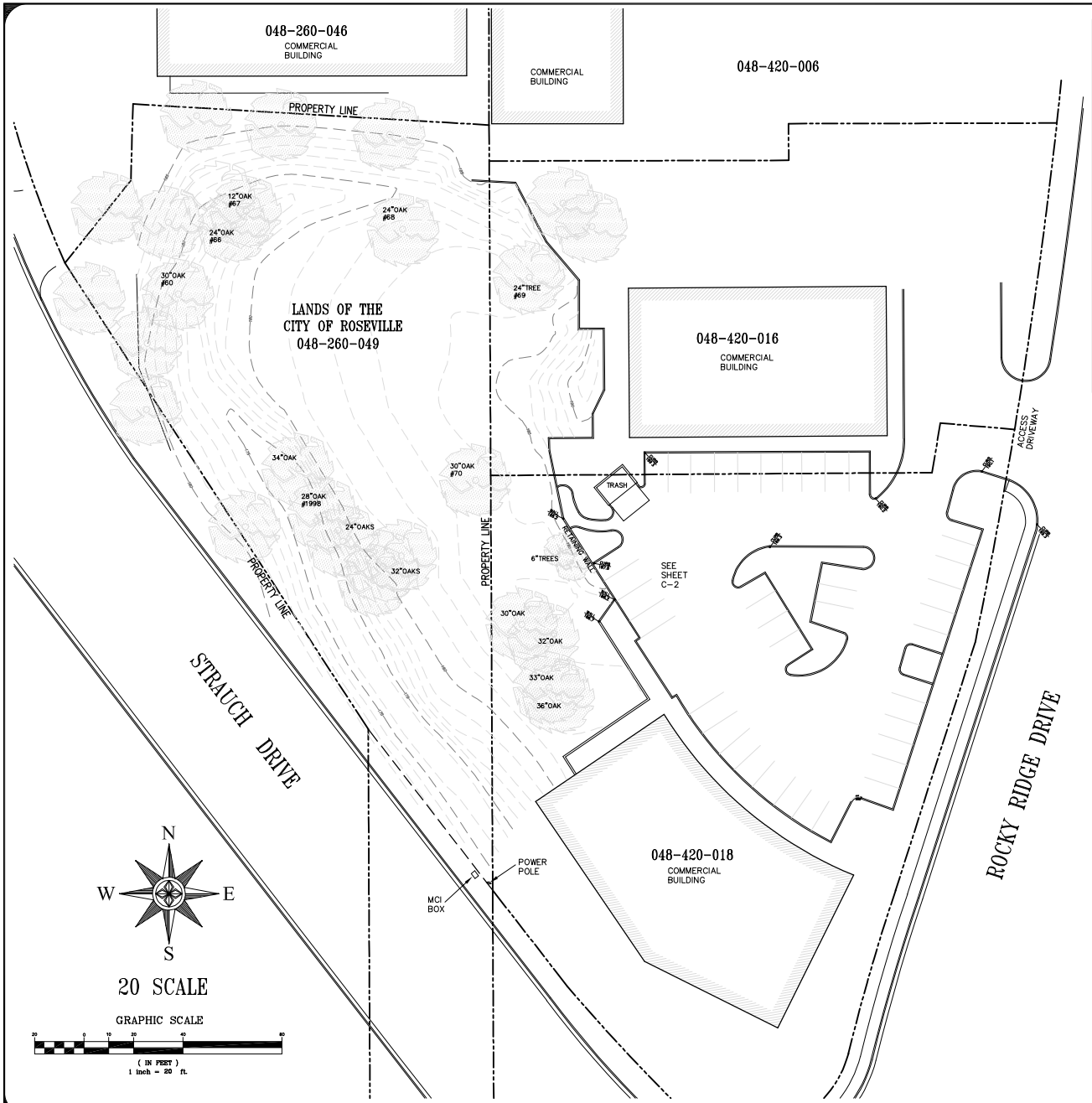

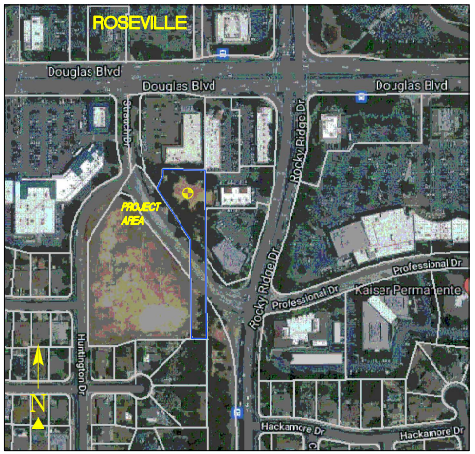

VICINITY AND BOUNDARY MAP

PROPERTY INFORMATION

OWNER: CITY OF ROSEVILLE
ADDRESS: 311 VERNON STEET
ROSEVILLE, CA 95678

SITE: CITY OF ROSEVILLE
2001 STRAUCH DRIVE
ROSEVILLE, CA 95661

ASSESSOR'S PARCEL NUMBER: 048-260-049
EXISTING GROUND ELEVATION: 184.0' AMSL

SURVEYOR'S NOTES

ALL EASEMENTS CONTAINED IN SAID TITLE REPORT AFFECTING THE IMMEDIATE AREA SURROUNDING THE LEASE HAVE BEEN PLOTTED. SURVEYOR HAS NOT PERFORMED A SEARCH OF PUBLIC RECORDS TO DETERMINE ANY DEFECT IN TITLE ISSUED. THE BOUNDARY SHOWN HEREON IS PLOTTED FROM RECORD INFORMATION AND DOES NOT CONSTITUTE A BOUNDARY SURVEY OF THE PROPERTY.

SURVEY DATE

1/19/2022

UTILITY NOTES

SURVEYOR DOES NOT GUARANTEE THAT ALL UTILITIES ARE SHOWN OR THEIR LOCATIONS. IT IS THE RESPONSIBILITY OF THE CONTRACTOR AND DEVELOPER TO CONTACT U.S.A. AND ANY OTHER INVOLVED AGENCIES TO LOCATE ALL UTILITIES PRIOR TO CONSTRUCTION. REMOVAL, RELOCATION AND/ OR REPLACEMENT IS THE RESPONSIBILITY OF THE CONTRACTOR.

BASIS OF BEARING

BEARINGS SHOWED HEREON ARE BASED UPON U.S. STATE PLANE NAD83 COORDINATE SYSTEM *STATE PLANE COORDINATE ZONE 2*, DETERMINED BY GPS OBSERVATIONS.

BENCHMARK

ELEVATION ESTABLISHED FROM GPS DERIVED ORTHOMETRIC HEIGHTS, APPLYING GEOID 99 SEPARATIONS, CONSTRAINING TO NGS CONTROL STATION 'LUTZ' ELEVATION=450.0' (NAVD88)

LESSOR'S LEGAL DESCRIPTION

ALL THAT CERTAIN REAL PROPERTY SITUATE IN THE COUNTY OF PLACER, STATE OF CALIFORNIA AND AS SHOWN IN SAID TITLE REPORT.

TITLE REPORT

TITLE REPORT WAS PROVIDED BY PLACER TITLE COMPANY, ORDER NO: P-344949, DATED: APRIL 18, 2021, FOR APN:048-260-049.

LEGEND

GR	GROUND SHOT	WV	WATER CONTROL VALVE
SSMH	SEWER MANHOLE		GUY CONDUCTOR
SDMH	STROM MANHOLE		FOUND AS NOTED
EP	EDGE OF PAVEMENT		POWER POLE
D/W	ACCESS DRIVEWAY		LIGHT POLE
PS	PARKING SPACE		ELECTRICAL TRANSFORMER
SW	SIDEWALK	AC	AIR CONDITIONING UNIT
FH	FIRE HYDRANT		TELEPHONE PEDESTAL
WV	WATER VALVE	TV	TELEPHONE VAULT
DI	DRAIN INLET		TELEPHONE MANHOLE
	GEODETIC COORDINATES	GV	GAS VALVE
XXXX	SPOT ELEVATION	GM	GAS METER
	DISH ANTENNA		PROPERTY LINE
			CHAIN LINK FENCE

ISSUE STATUS

REV.	DESCRIPTION	DATE
△	SITE PLAN	1/19/2022

HAYES Land Surveying And Mapping
2930 MADIGAN COURT
CONCORD, CA 94518

LICENSED LAND SURVEYOR ★ JOSEPH A. HAYES ★ No. 8750 ★ EXP. 12/31/21 ★ STATE OF CALIFORNIA

CITY OF ROSEVILLE
2001 STRAUCH DRIVE
ROSEVILLE, CA 95661

TOPOGRAPHIC SURVEY
EXISTING CONDITIONS

C-1

SHEET 1 of 2

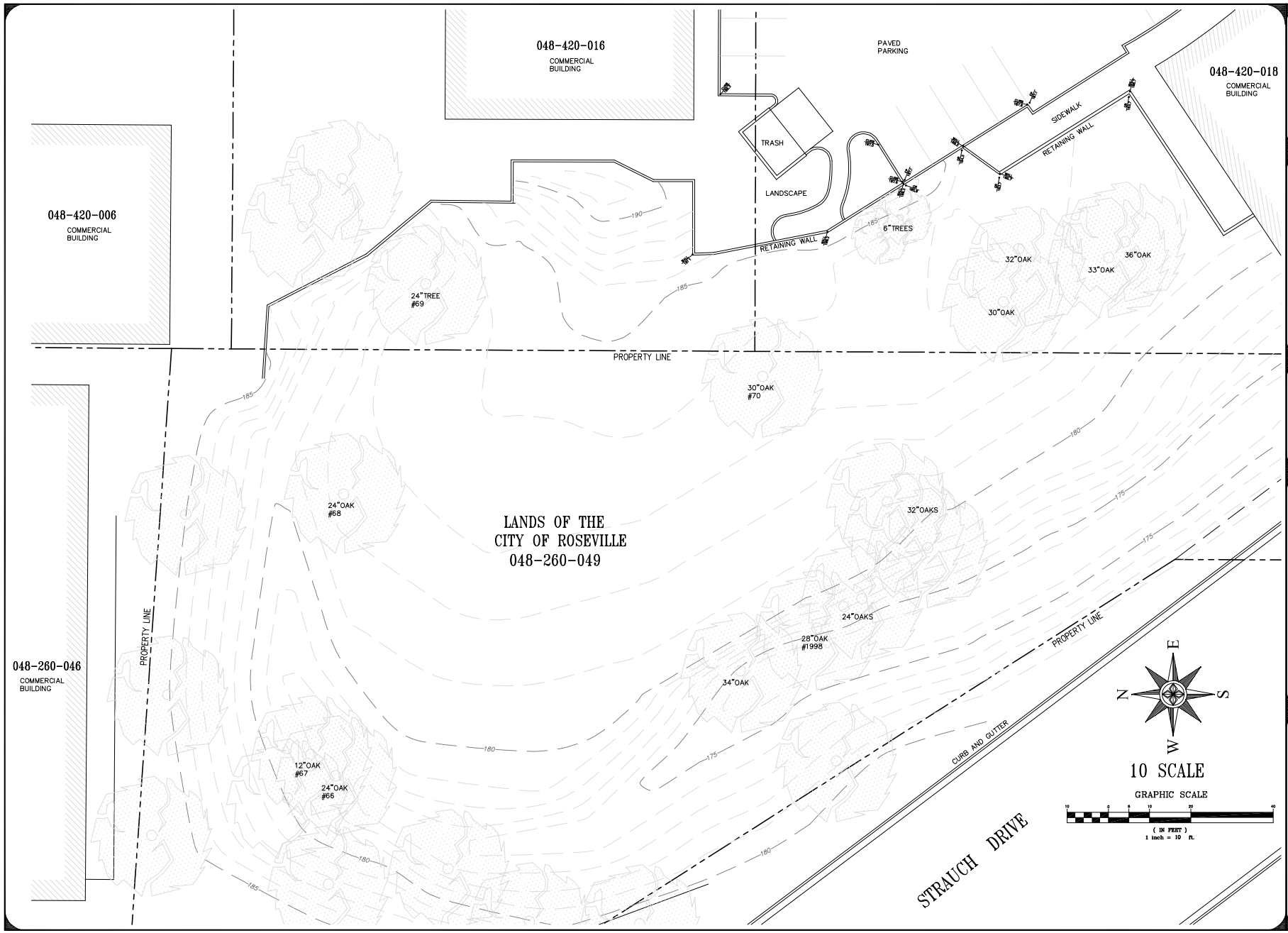

ISSUE STATUS

△	DATE	DESCRIPTION	REV.
	1/19/2022	SITE PLAN	

HAYES
Land Surveying And Mapping
2830 MADIGAN COURT
CONCORD, CA 94518

LICENSED LAND SURVEYOR
STATE OF CALIFORNIA

CITY OF ROSEVILLE
2001 STRAUCH DRIVE
ROSEVILLE, CA 95661

TOPOGRAPHIC SURVEY
EXISTING CONDITIONS

C-2
SHEET 2 of 2

PROJECT NUMBER: EN22-0684

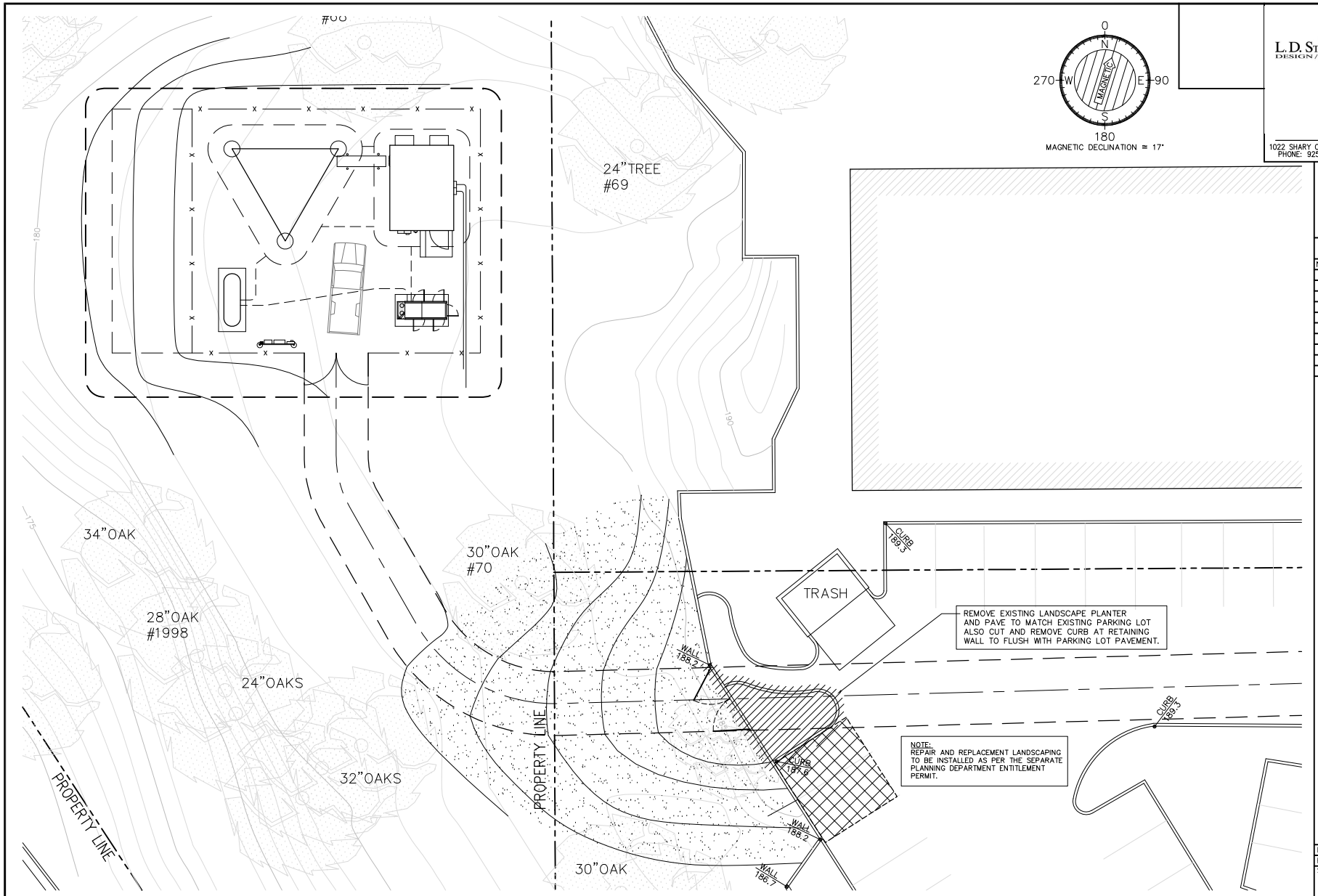

DEMOLITION PLAN
SCALE: 1/8"=1'-0"

L.D. STROBEL CO. INC.
DESIGN / CONSTRUCTION
WIRELESS COMMUNICATIONS
1022 SHARY CIRCLE, SUITE 9, CONCORD, CA. 94518
PHONE: 925-686-3241 FAX: 925-686-3350

REGISTERED PROFESSIONAL ENGINEER
CONRAD L. ALFARO
NO C28599
EXPIRE 3-31-25
CIVIL
STATE OF CALIFORNIA

REVISIONS

NO.	DATE	DESCRIPTION
1	2/8/22	90% ZD
2	6/23/22	100% ZD/CD
3	7/25/22	100% ZD/CD Rev A
4	7/29/22	100% ZD/CD Rev B
5	8/20/23	100% ZD/CD FINAL
6	9/25/23	100% ZD/CD FINAL

SITE ADDRESS:
2001 STRAUCH DRIVE
ROSEVILLE, CA 95661
PLACER COUNTY
APN: 048-260-049

CITY OF ROSEVILLE
INFORMATION TECHNOLOGY
316 VERNON ST SUITE 300
ROSEVILLE, CA 95678

PROPOSED EQUIPMENT INSTALLATION
STRAUCH DRIVE

CITY OF ROSEVILLE
CALIFORNIA

DRAWN: jjg DATE: 8/18/22
FILE: 9276-A1
SHEET NO.
D-1

PROJECT NUMBER: EN22-0684

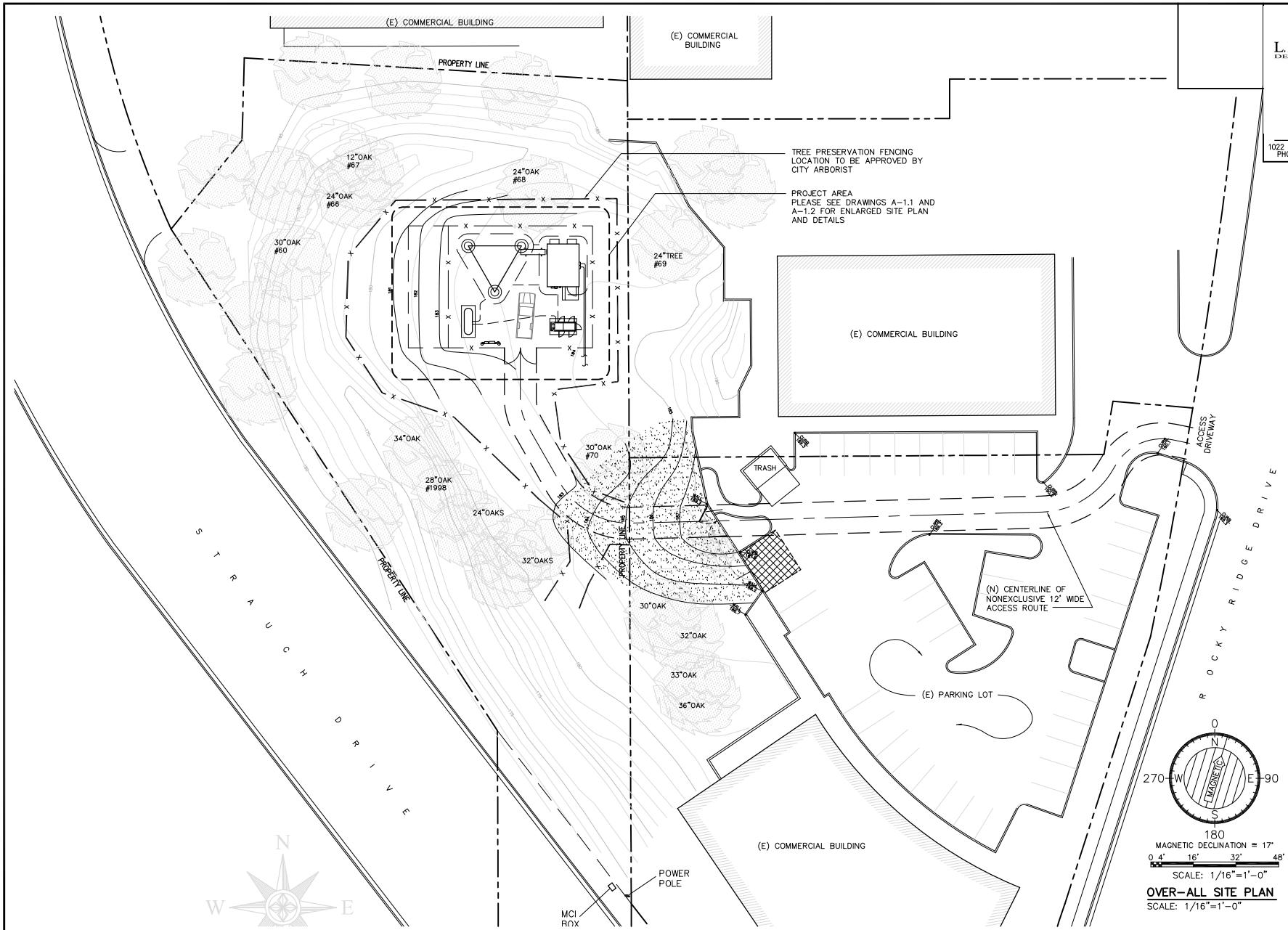

OVER-ALL SITE PLAN
SCALE: 1/16"=1'-0"

L.D. STROBEL CO. INC.
DESIGN / CONSTRUCTION
WIRELESS COMMUNICATIONS
1022 SHARY CIRCLE, SUITE 9, CONCORD, CA. 94518
PHONE: 925-686-3241 FAX: 925-686-3350

REGISTERED PROFESSIONAL ENGINEER
CONRAD L. ALFARO
NO C28899
EXPIRE 3-31-25
CIVIL
STATE OF CALIFORNIA

REVISIONS

NO.	DATE	DESCRIPTION
1	2/8/22	90% ZD
2	6/23/22	100% ZD/CD
3	7/25/22	100% ZD/CD Rev A
4	7/29/22	100% ZD/CD Rev B
5	8/20/23	100% ZD/CD FINAL
6	9/25/23	100% ZD/CD FINAL

SITE ADDRESS:
2001 STRAUCH DRIVE
ROSEVILLE, CA 95661
PLACER COUNTY
APN: 048-260-049

CITY OF ROSEVILLE
INFORMATION TECHNOLOGY
316 VERNON ST SUITE 300
ROSEVILLE, CA 95678

PROPOSED EQUIPMENT INSTALLATION
STRAUCH DRIVE

CITY OF ROSEVILLE CALIFORNIA

DRAWN: jjg DATE: 8/16/22
FILE: 9276-A1
SHEET NO.
A-1

PROJECT NUMBER: EN22-0684

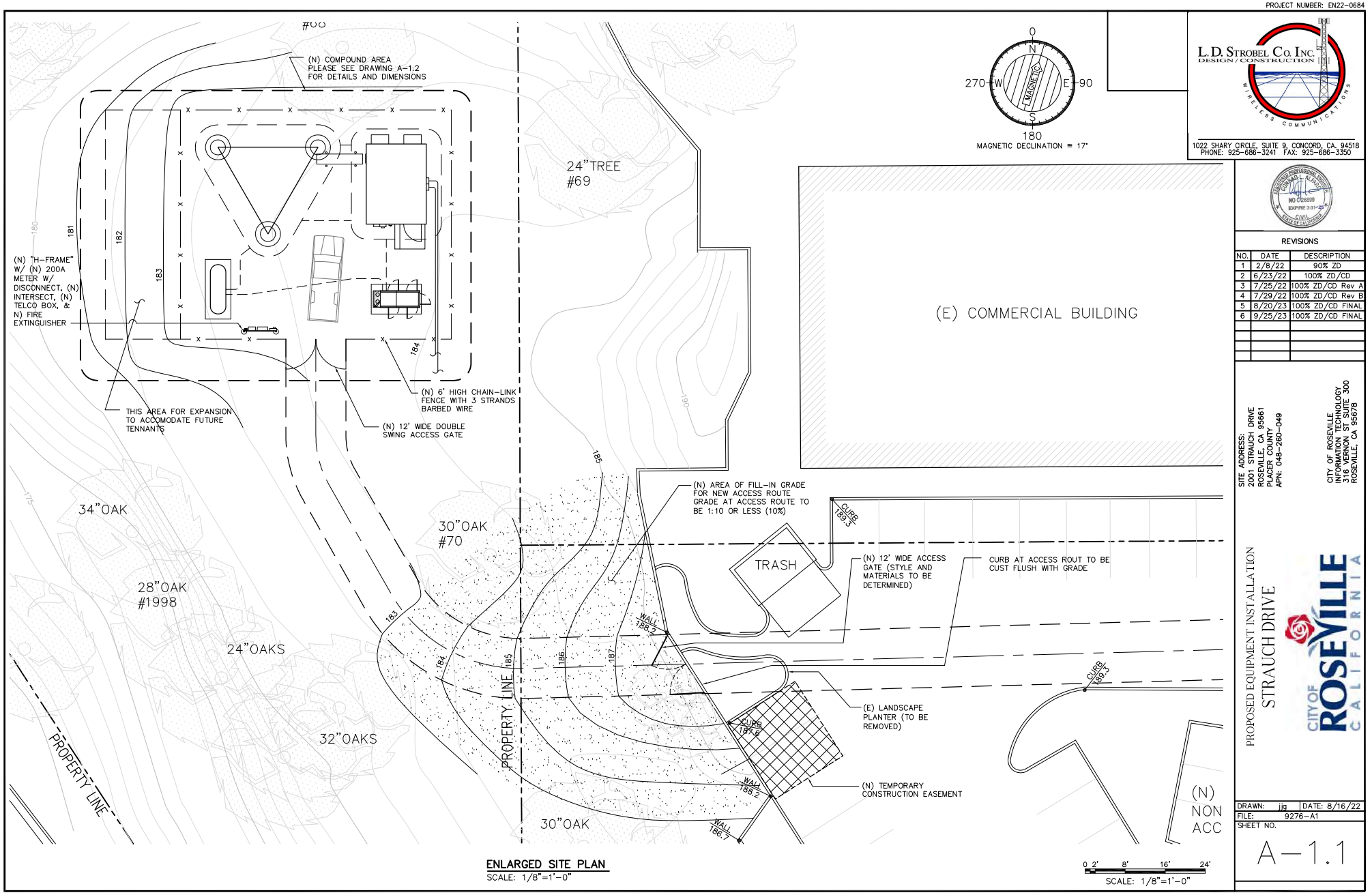

ENLARGED SITE PLAN
SCALE: 1/8"=1'-0"

0 2' 8' 16' 24'
SCALE: 1/8"=1'-0"

L.D. STROBEL CO. INC.
DESIGN / CONSTRUCTION
WIRELESS COMMUNICATIONS
1022 SHARY CIRCLE, SUITE 9, CONCORD, CA. 94518
PHONE: 925-686-3241 FAX: 925-686-3350

REVISIONS

NO.	DATE	DESCRIPTION
1	2/8/22	90% ZD
2	6/23/22	100% ZD/CD
3	7/25/22	100% ZD/CD Rev A
4	7/29/22	100% ZD/CD Rev B
5	8/20/23	100% ZD/CD FINAL
6	9/25/23	100% ZD/CD FINAL

SITE ADDRESS:
2001 STRAUCH DRIVE
ROSEVILLE, CA 95661
PLACER COUNTY
APN: 048-260-049

CITY OF ROSEVILLE
INFORMATION TECHNOLOGY
316 VERNON ST SUITE 300
ROSEVILLE, CA 95678

PROPOSED EQUIPMENT INSTALLATION
STRAUCH DRIVE

CITY OF ROSEVILLE CALIFORNIA

DRAWN: jjg DATE: 8/16/22
FILE: 9276-A1
SHEET NO.
A-1.1

PROJECT NUMBER: EN22-0684

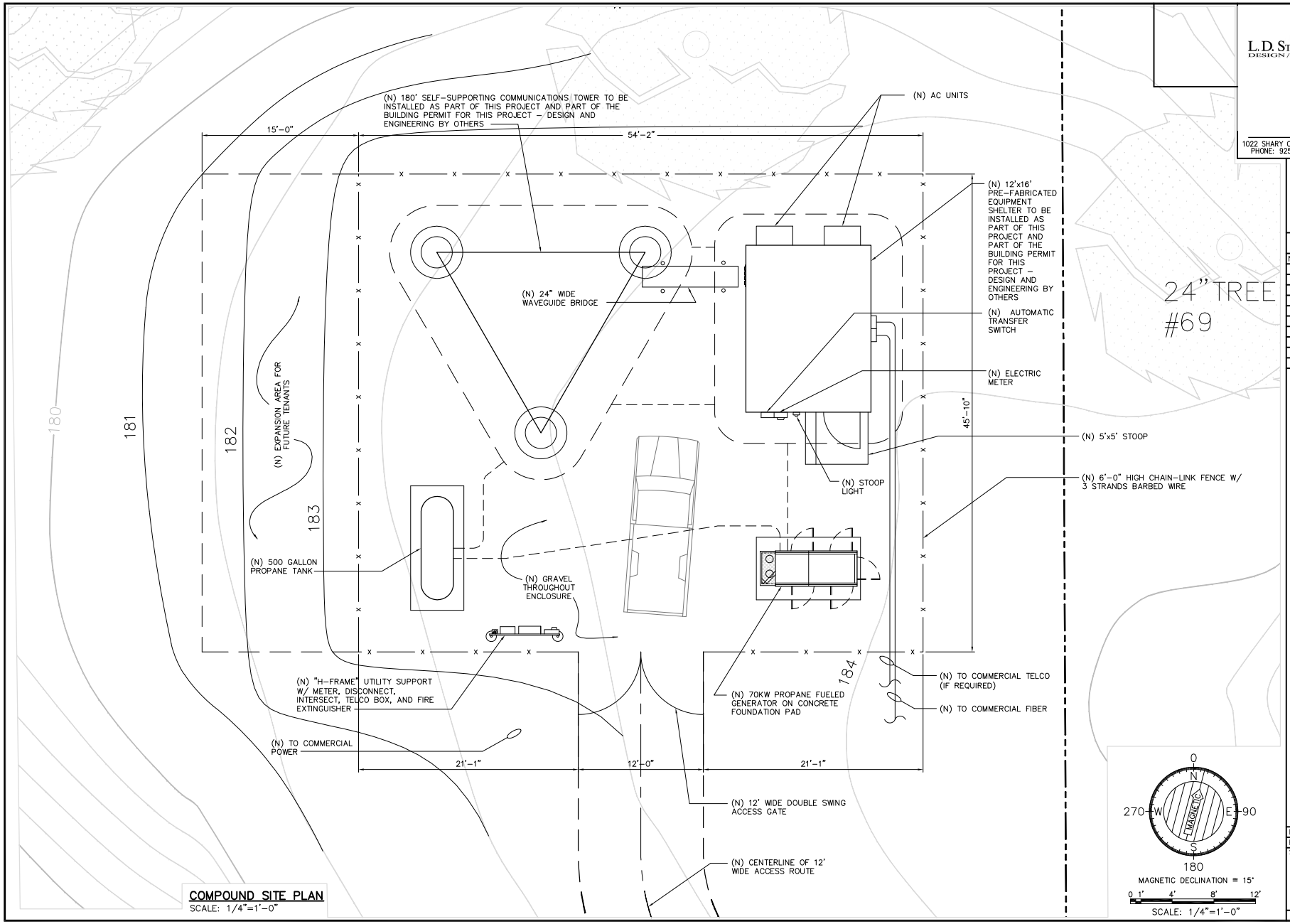

COMPOUND SITE PLAN
SCALE: 1/4"=1'-0"

MAGNETIC DECLINATION = 15°

0 1' 4' 8' 12'

SCALE: 1/4"=1'-0"

L.D. STROBEL CO. INC.
DESIGN / CONSTRUCTION
WIRELESS COMMUNICATIONS
1022 SHARY CIRCLE, SUITE 9, CONCORD, CA. 94518
PHONE: 925-686-3241 FAX: 925-686-3350

REVISIONS

NO.	DATE	DESCRIPTION
1	2/8/22	90% ZD
2	6/23/22	100% ZD/CD
3	7/25/22	100% ZD/CD Rev A
4	7/29/22	100% ZD/CD Rev B
5	8/20/23	100% ZD/CD FINAL
6	9/25/23	100% ZD/CD FINAL

SITE ADDRESS:
2001 STRAUCH DRIVE
ROSEVILLE, CA 95661
PLACER COUNTY
APN: 048-260-049

CITY OF ROSEVILLE
INFORMATION TECHNOLOGY
316 VERNON ST SUITE 300
ROSEVILLE, CA 95678

PROPOSED EQUIPMENT INSTALLATION
STRAUCH DRIVE

CITY OF ROSEVILLE CALIFORNIA

DRAWN: jjg DATE: 4/5/22
FILE: 9276-A1
SHEET NO.
A-1.2

PROJECT NUMBER: EN22-0684

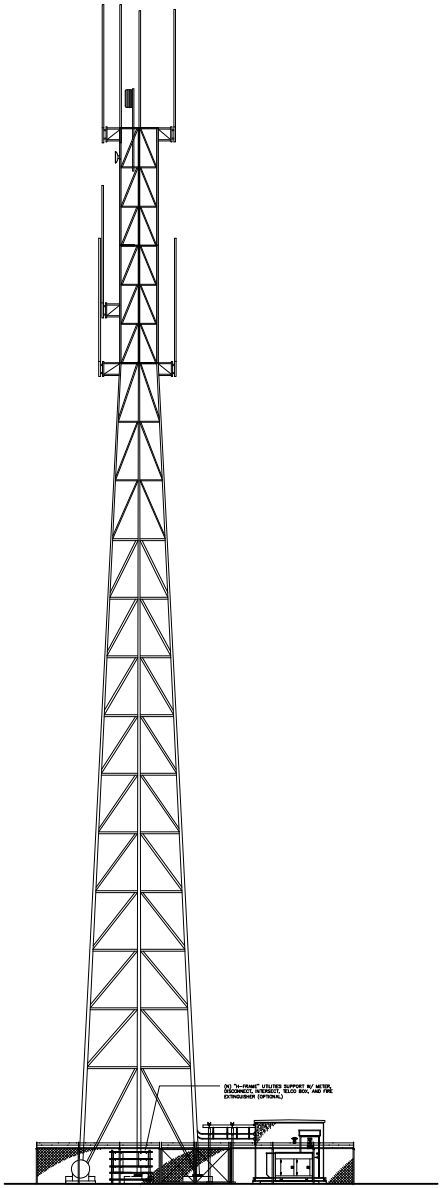

SOUTH ELEVATION
SCALE: 1"=10'-0"

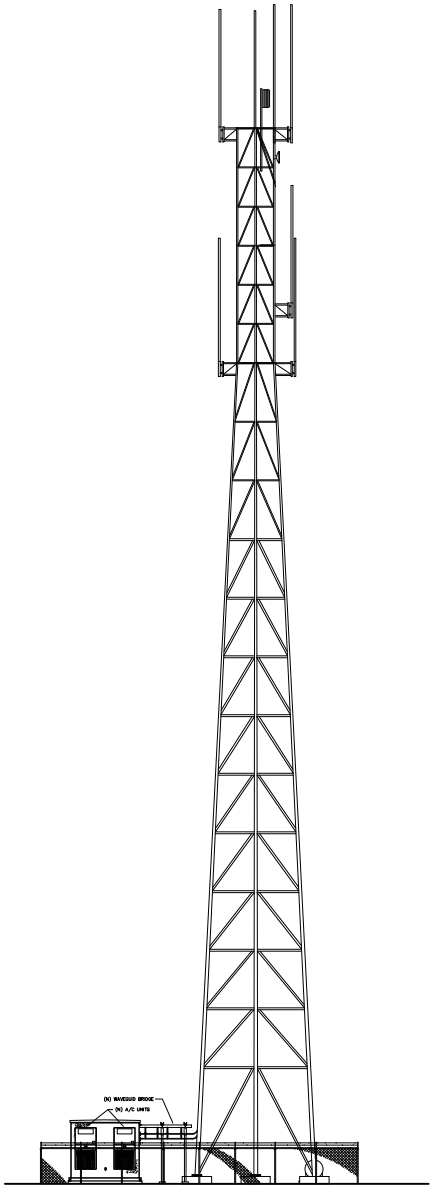

NORTH ELEVATION
SCALE: 1"=10'-0"

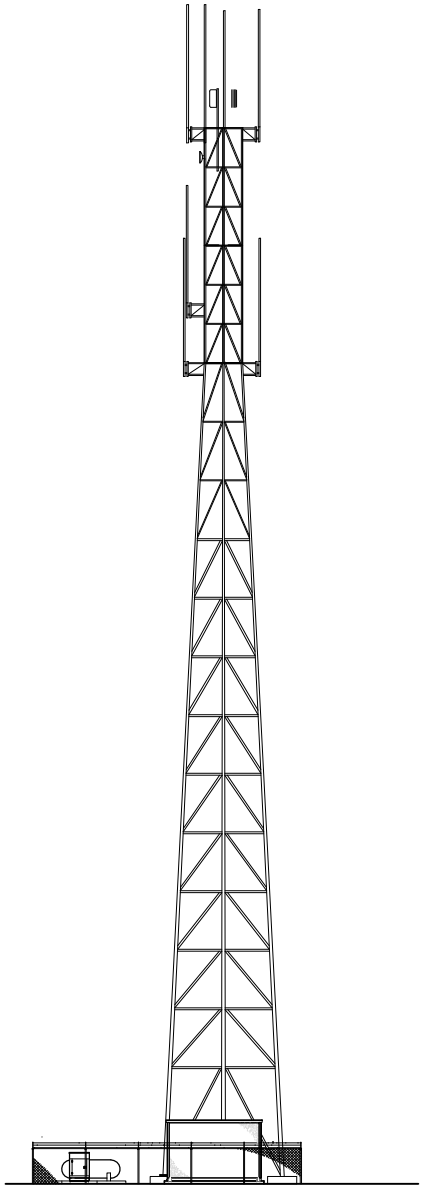

EAST ELEVATION
SCALE: 1"=10'-0"

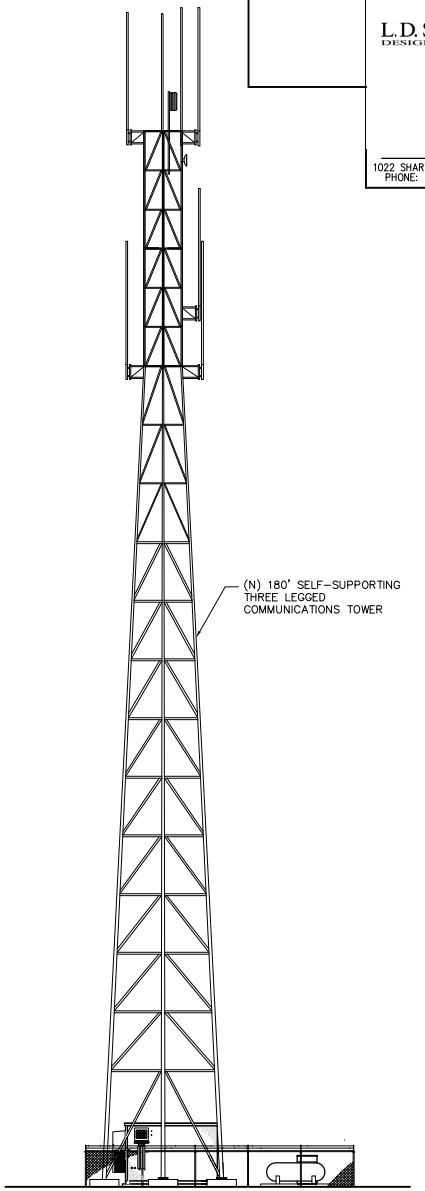

WEST ELEVATION
SCALE: 1"=10'-0"

01' 5' 10' 20' 30'
SCALE: 1"=10'-0"

L.D. STROBEL CO. INC.
DESIGN / CONSTRUCTION
WIRELESS COMMUNICATIONS
1022 SHARY CIRCLE, SUITE 9, CONCORD, CA. 94518
PHONE: 925-686-3241 FAX: 925-686-3350

REVISIONS

NO.	DATE	DESCRIPTION
1	2/8/22	90% ZD
2	6/23/22	100% ZD/CD
3	7/25/22	100% ZD/CD Rev A
4	7/29/22	100% ZD/CD Rev B
5	8/20/23	100% ZD/CD FINAL
6	9/25/23	100% ZD/CD FINAL

SITE ADDRESS:
2001 STRAUCH DRIVE
ROSEVILLE, CA 95661
PLACER COUNTY
APN: 048-260-049

CITY OF ROSEVILLE
INFORMATION TECHNOLOGY
316 VERNON ST SUITE 300
ROSEVILLE, CA 95678

PROPOSED EQUIPMENT INSTALLATION
STRAUCH DRIVE

CITY OF ROSEVILLE CALIFORNIA

DRAWN: jjg DATE: 8/18/22
FILE: 9276-A1
SHEET NO.
A-2

PROJECT NUMBER: EN22-0684

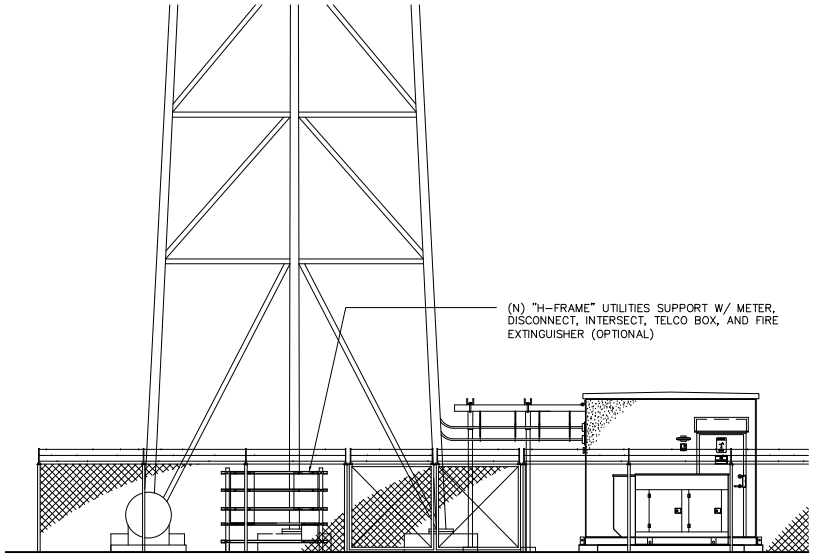

SOUTH ELEVATION
SCALE: 1/4"=1'-0"

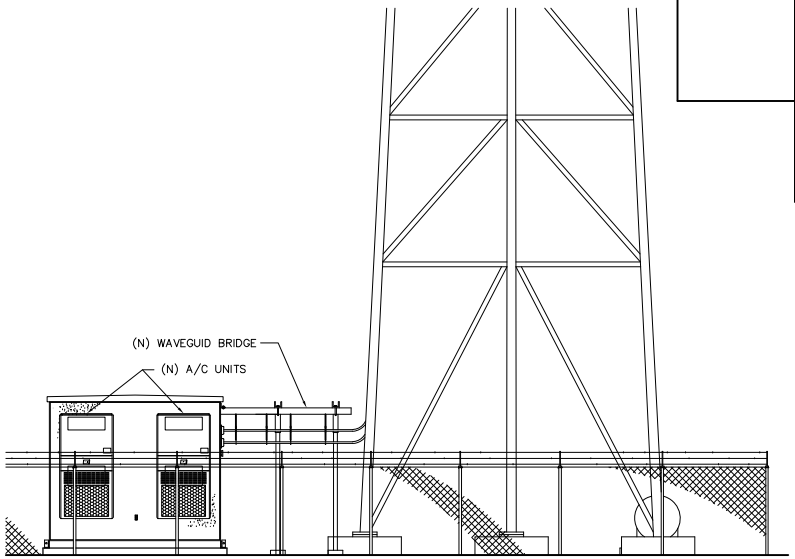

NORTH ELEVATION
SCALE: 1/4"=1'-0"

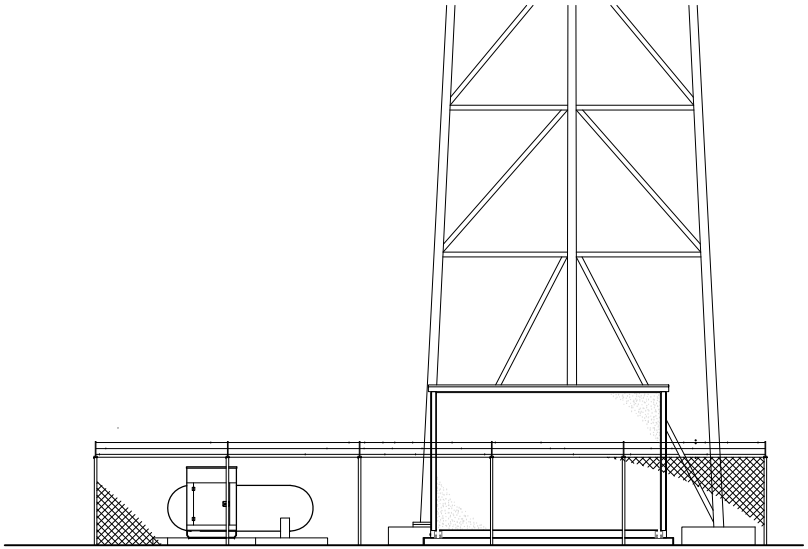

EAST ELEVATION
SCALE: 1/4"=1'-0"

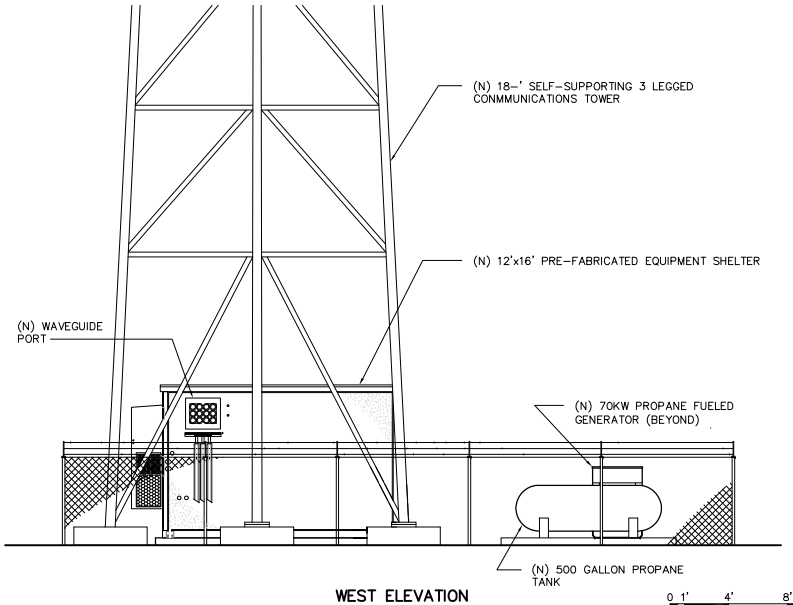

WEST ELEVATION
SCALE: 1/4"=1'-0"

0 1' 4' 8' 12'
SCALE: 1/4"=1'-0"

L.D. STROBEL CO. INC.
DESIGN / CONSTRUCTION
WIRELESS COMMUNICATIONS
1022 SHARY CIRCLE, SUITE 9, CONCORD, CA. 94518
PHONE: 925-686-3241 FAX: 925-686-3350

REGISTERED PROFESSIONAL ENGINEER
CONRAD L. ALFARO
NO C28699
EXPIRE 3-31-25
CIVIL
STATE OF CALIFORNIA

REVISIONS

NO.	DATE	DESCRIPTION
1	2/8/22	90% ZD
2	6/23/22	100% ZD/CD
3	7/25/22	100% ZD/CD Rev A
4	7/29/22	100% ZD/CD Rev B
5	8/20/23	100% ZD/CD FINAL
6	9/25/23	100% ZD/CD FINAL

SITE ADDRESS:
2001 STRAUCH DRIVE
ROSEVILLE, CA 95661
PLACER COUNTY
APN: 048-260-049

CITY OF ROSEVILLE
INFORMATION TECHNOLOGY
316 VERNON ST SUITE 300
ROSEVILLE, CA 95678

PROPOSED EQUIPMENT INSTALLATION
STRAUCH DRIVE

CITY OF ROSEVILLE
CALIFORNIA

DRAWN: jjg DATE: 4/6/22
FILE: 9276-A1
SHEET NO.
A-3

PROJECT NUMBER: EN22-0684

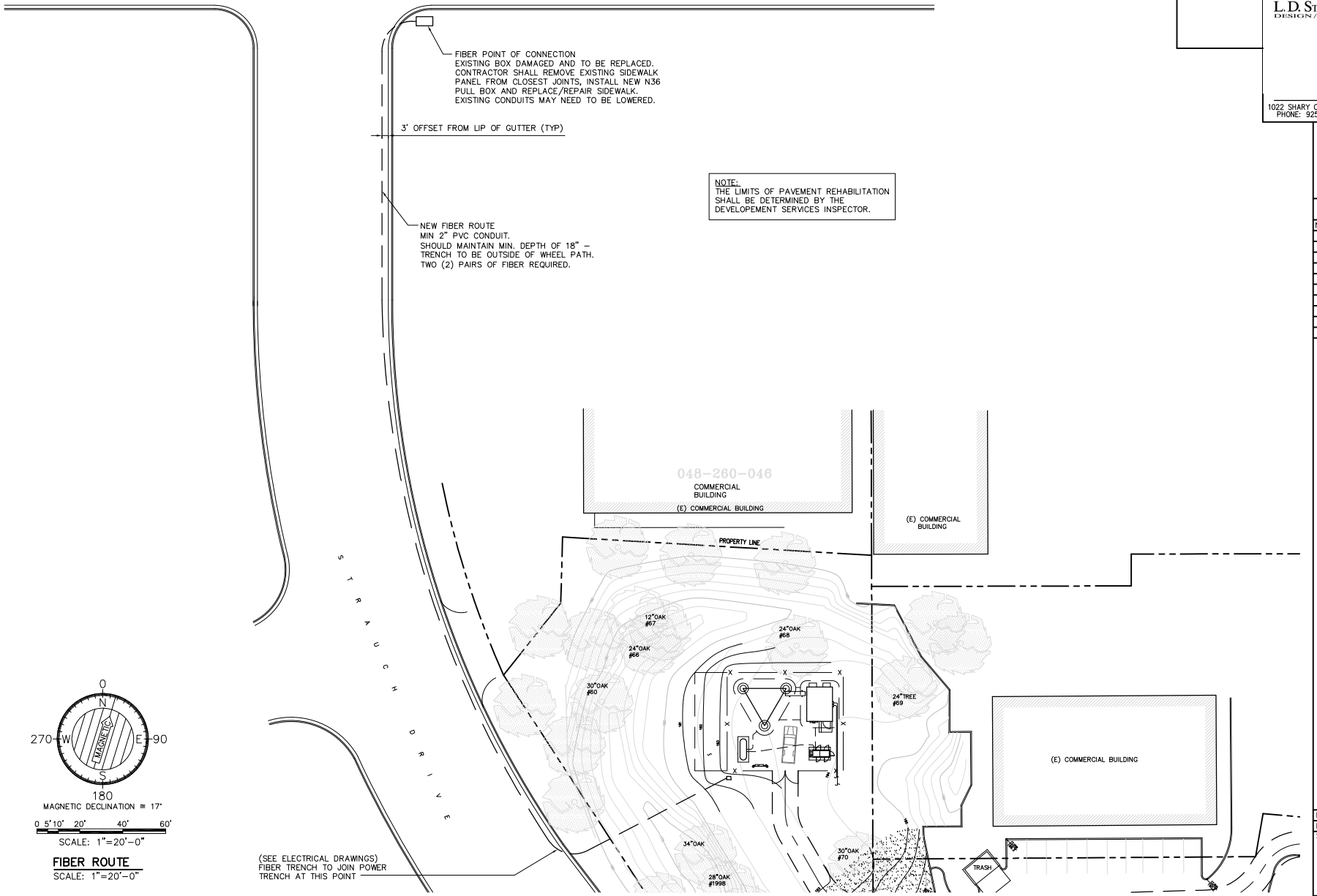

FIBER ROUTE
SCALE: 1"=20'-0"

L.D. STROBEL CO. INC.
DESIGN / CONSTRUCTION
WIRELESS COMMUNICATIONS
1022 SHARY CIRCLE, SUITE 9, CONCORD, CA. 94518
PHONE: 925-686-3241 FAX: 925-686-3350

REGISTERED PROFESSIONAL ENGINEER
CONRAD L. ALFARO
NO C 28699
EXPIRE 3-31-25
CIVIL
STATE OF CALIFORNIA

REVISIONS

NO.	DATE	DESCRIPTION
1	2/8/22	90% ZD
2	6/23/22	100% ZD/CD
3	7/25/22	100% ZD/CD Rev A
4	7/29/22	100% ZD/CD Rev B
5	8/20/23	100% ZD/CD FINAL
6	9/25/23	100% ZD/CD FINAL

SITE ADDRESS:
2001 STRAUCH DRIVE
ROSEVILLE, CA 95661
PLACER COUNTY
APN: 048-260-049

CITY OF ROSEVILLE
INFORMATION TECHNOLOGY
316 VERNON ST SUITE 300
ROSEVILLE, CA 95678

PROPOSED EQUIPMENT INSTALLATION
STRAUCH DRIVE

CITY OF ROSEVILLE
CALIFORNIA

DRAWN: jjg DATE: 8/16/22
FILE: 9276-A1
SHEET NO.
A-5

PROJECT NUMBER: EN22-0684

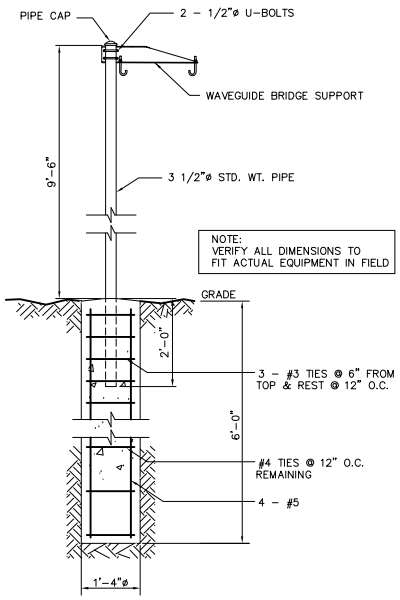

WAVEGUIDE BRIDGE – STRUCTURAL DETAILS (1)
SCALE: 3/4"=1'-0"

0 6" 1' 2' 4'
SCALE: 3/4"=1'-0"

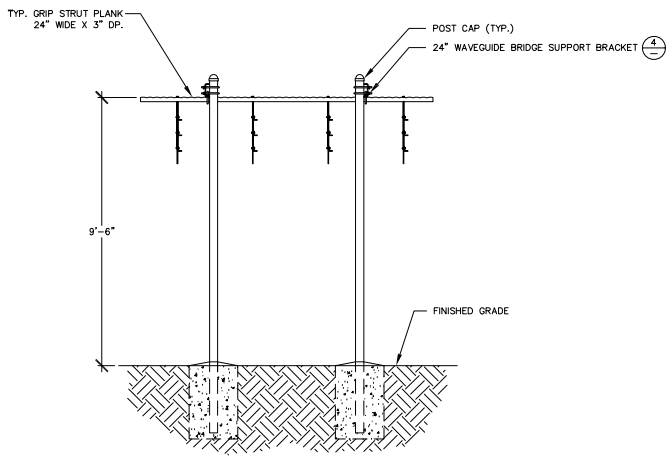

WAVEGUIDE BRIDGE – ELEVATION (TYP) (3)
SCALE: NONE

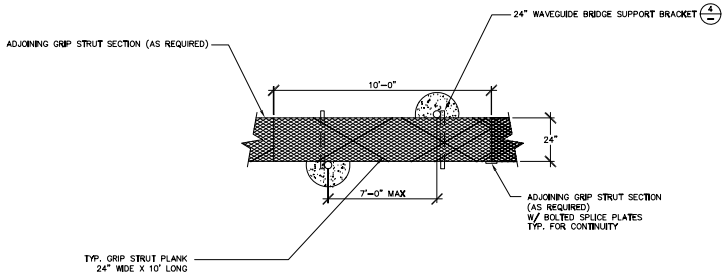

WAVEGUIDE BRIDGE – PLAN DETAIL (TYP) (2)
SCALE: NONE

ITEM	DESCRIPTION
1	24" WAVEGUIDE BRIDGE SUPPORT BRACKET
2	1/2" X 3-5/8" X 6" GALV U-BOLT KIT
3	1/2" J-BOLT
4	1/2" GALV FLAT WASHER
5	1/2" GALV LOCK WASHER
6	1/2" GALV HEX NUT

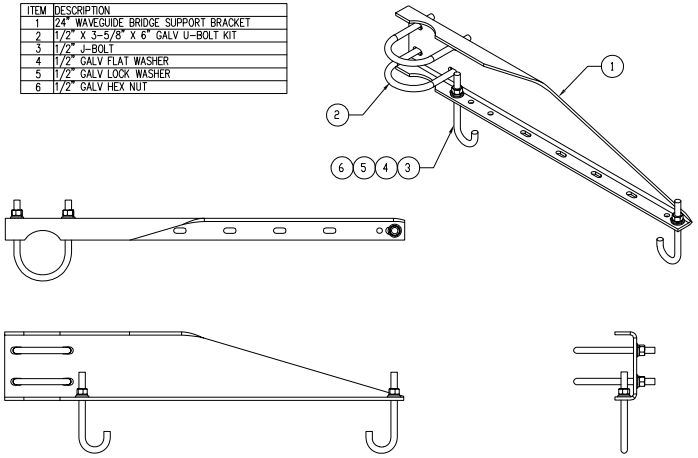

WAVEGUIDE BRIDGE – ATTACHMENT DETAIL (4)
SCALE: NONE

L.D. STROBEL CO. INC.
DESIGN / CONSTRUCTION
WIRELESS COMMUNICATIONS
1022 SHARY CIRCLE, SUITE 9, CONCORD, CA. 94518
PHONE: 925-686-3241 FAX: 925-686-3350

REVISIONS

NO.	DATE	DESCRIPTION
1	2/8/22	90% ZD
2	6/23/22	100% ZD/CD
3	7/25/22	100% ZD/CD Rev A
4	7/29/22	100% ZD/CD Rev B
5	8/20/23	100% ZD/CD FINAL
6	9/25/23	100% ZD/CD FINAL

SITE ADDRESS:
2001 STRAUCH DRIVE
ROSEVILLE, CA 95661
PLACER COUNTY
APN: 048-260-049

CITY OF ROSEVILLE
INFORMATION TECHNOLOGY
316 VERNON ST SUITE 300
ROSEVILLE, CA 95678

PROPOSED EQUIPMENT INSTALLATION
STRAUCH DRIVE

CITY OF ROSEVILLE CALIFORNIA

DRAWN: jjg DATE: 7/26/22
FILE: 9276-A1
SHEET NO.
A-6

PROJECT NUMBER: EN22-0684

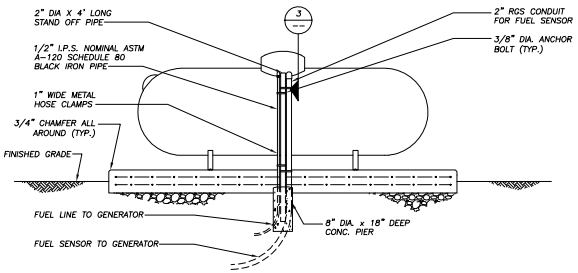

PROPANE TANK DETAIL *

SCALE: N.T.S.

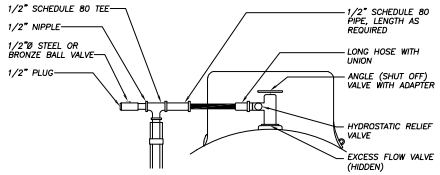

* NOTE:
OR AS PER MANUFACTURER

PROPANE FUEL PIPE SCHEDULE *

SCALE: 1/2" = 1'-0"

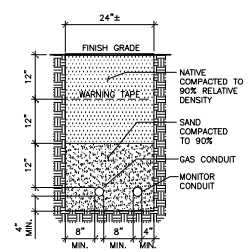

PROPANE TRENCH DETAIL

SCALE: N.T.S.

PROPANE TANK DETAILS
SCALE: AS INDICATED

L.D. STROBEL CO. INC.
DESIGN / CONSTRUCTION
WIRELESS COMMUNICATIONS
1022 SHARY CIRCLE, SUITE 9, CONCORD, CA. 94518
PHONE: 925-686-3241 FAX: 925-686-3350

REGISTERED PROFESSIONAL ENGINEER
CONRAD L. ALFARO
NO C28899
EXPIRE 3-31-25
CIVIL
STATE OF CALIFORNIA

REVISIONS

NO.	DATE	DESCRIPTION
1	2/8/22	90% ZD
2	6/23/22	100% ZD/CD
3	7/25/22	100% ZD/CD Rev A
4	7/29/22	100% ZD/CD Rev B
5	8/20/23	100% ZD/CD FINAL
6	9/25/23	100% ZD/CD FINAL

SITE ADDRESS:
2001 STRAUCH DRIVE
ROSEVILLE, CA 95661
PLACER COUNTY
APN: 048-260-049

CITY OF ROSEVILLE
INFORMATION TECHNOLOGY
316 VERNON ST SUITE 300
ROSEVILLE, CA 95678

PROPOSED EQUIPMENT INSTALLATION
STRAUCH DRIVE

CITY OF ROSEVILLE
CALIFORNIA

DRAWN: jjg DATE: 7/19/22
FILE: 9276-A1
SHEET NO.
A-7

PROJECT NUMBER: EN22-0684

L.D. STROBEL CO. INC.
DESIGN / CONSTRUCTION
WIRELESS COMMUNICATIONS
1022 SHARY CIRCLE, SUITE 9, CONCORD, CA. 94518
PHONE: 925-686-3241 FAX: 925-686-3350

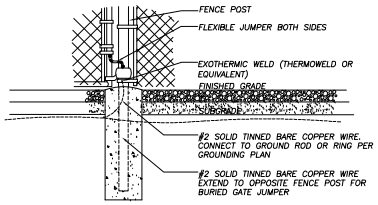

1 GATE AND FENCE POST GROUNDING DETAIL
SCALE: N.T.S.

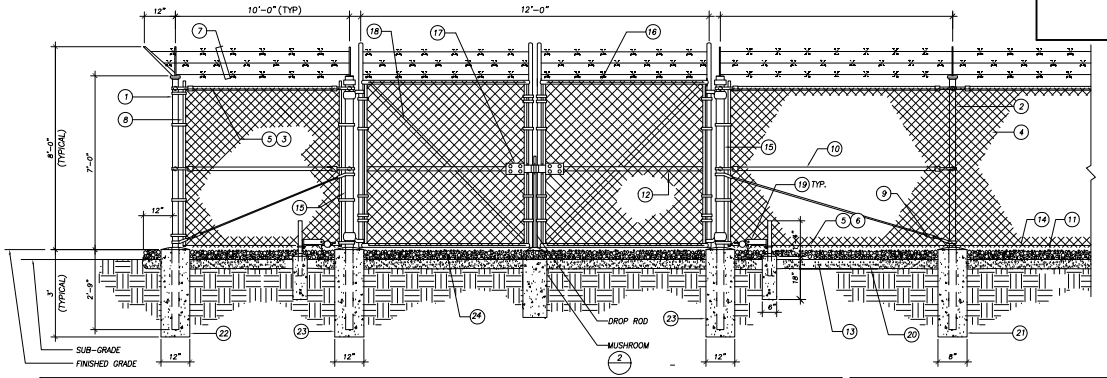

2

KEYED NOTES:

1. CORNER, END OR PULL POST 3" NOMINAL SCHEDULE 40 PIPE.
2. LINE POST: 2 1/2" SCHEDULE 40 PIPE, PER ASTM-F1083. LINE POSTS SHALL BE EQUALLY SPACED AT MAXIMUM 8'-0" O.C.
3. TOP RAIL & BRACE RAIL: 1 1/2" PIPE, PER ASTM-F1083.
4. FABRIC: 9 GA. CORE WIRE SIZE 2" MESH, CONFORMING TO ASTM-A392.
5. TIE WIRE: MINIMUM 11 GA. GALVANIZED STEEL AT POSTS AND RAILS A SINGLE WRAP OF FABRIC TIE AND AT TENSION WIRE BY HOG-RINGS SPACED MAX. 24" INTERVALS.
6. TENSION WIRE: 9 GA. GALVANIZED STEEL.
7. BARBED WIRE: DOUBLE STRAND 12-1/2" O.D. TWISTED WIRE TO MATCH WITH FABRIC 14 GA., 4 PT. BARBS SPACED ON APPROXIMATELY 5" ON CENTER.
8. STRETCHER BAR.
9. 3/8" DIAGONAL ROD WITH GALVANIZED STEEL TURNBUCKLE OR DIAGONAL THREADED ROD.
10. FENCE CORNER POST BRACE: 1 5/8" DIA. EACH CORNER EACH WAY.
11. 1 1/2" MAXIMUM CLEARANCE FROM GRADE.
12. GATE BRACE: 1 5/8" DIA. BOTH SIDES
13. 4" THICK COMPACTED 95% SUBGRADE (AB)
14. FINISHED GRADE SHALL BE UNIFORM AND LEVEL.
15. GATE POST 4", SCHEDULE 40 PIPE, FOR GATE WIDTHS UP TO 7 FEET USE SINGLE SWING GATE, 14 FEET FOR DOUBLE SWING GATE, PER ASTM-F1083.
16. GATE FRAME: 1 1/2" PIPE, PER ASTM-F1083.
17. "MTS" MULTI-LOCKING DEVICE OR EQUIVALENT
18. GATE DIAGONAL GALVANIZED STEEL 1 1/2" PIPE.
19. DUCK BILL OPEN GATE HOLDER. VERIFY LOCATION IN FIELD PRIOR TO INSTALLATION.
20. GEOTEXTILE FABRIC.
21. LINE POST: CONCRETE FOUNDATION (2000 PSI)
22. CORNER POST: CONCRETE FOUNDATION (2000 PSI)
23. GATE POST: CONCRETE FOUNDATION (2000 PSI)
24. 6.5" GRAVEL

GENERAL NOTES:

1. INSTALL FENCING PER ASTM F-567.
2. INSTALL SWING GATES PER ASTM F-900.
3. BARBED WIRE PERMIT REQUIREMENT SHALL BE IN COMPLIANCE WITH LOCAL ORDINANCE, IF REQUIRED.
4. POST & GATE PIPE SIZES ARE INDUSTRY STANDARDS. ALL PIPE TO BE 1 1/2" GALV. (HOT DIP, ASTM A120 GRADE "A" STEEL). ALL GATE FRAMES SHALL BE WELDED. ALL WELDING SHALL BE COATED WITH (3) COATS OF COLD GALV. (OR EQUAL).
5. ALL OPEN POSTS SHALL HAVE END-CAPS.
6. USE GALVANIZED HOG-RING WIRE TO MOUNT ALL SIGNS.
7. ALL SIGNS MUST BE MOUNTED ON INSIDE OF FENCE FABRIC.
8. FENCE FABRIC TO HAVE VINYL SLATS FOR VISUAL SCREENING. COLOR TO BE DETERMINED BY CITY OF ROSEVILLE.

2 FENCE, GATE, AND COMPOUND CROSS SECTION
SCALE: N.T.S.

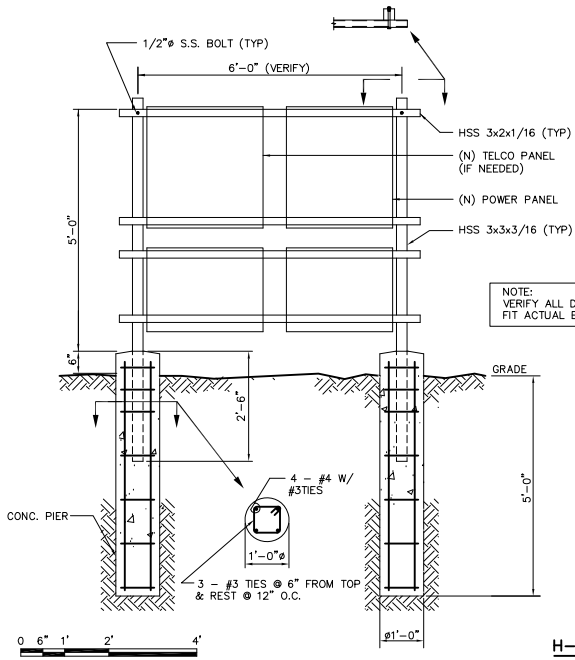

SCALE: 3/4"=1'-0"

H-FRAME DETAILS
SCALE: 3/4"=1'-0"

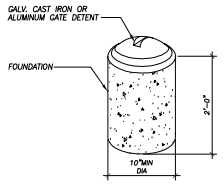

3 MUSHROOM DETAIL
SCALE: N.T.S.

FENCE DETAILS
SCALE: NONE

REVISIONS

NO.	DATE	DESCRIPTION
1	2/8/22	90% ZD
2	6/23/22	100% ZD/CD
3	7/25/22	100% ZD/CD Rev A
4	7/29/22	100% ZD/CD Rev B
5	8/20/23	100% ZD/CD FINAL
6	9/25/23	100% ZD/CD FINAL

SITE ADDRESS:
2001 STRAUCH DRIVE
ROSEVILLE, CA 95661
PLACER COUNTY
APN: 048-260-049

CITY OF ROSEVILLE
INFORMATION TECHNOLOGY
316 VERNON ST SUITE 300
ROSEVILLE, CA 95678

PROPOSED EQUIPMENT INSTALLATION
STRAUCH DRIVE

CITY OF ROSEVILLE CALIFORNIA

DRAWN: jjg DATE: 8/17/22
FILE: 9276-A1
SHEET NO.
A-8

PROJECT NUMBER: EN22-0684

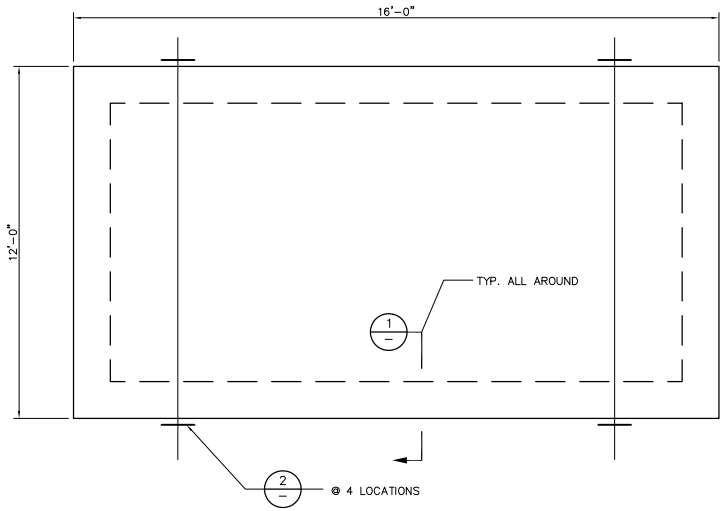

EQUIPMENT SHELTER FOUNDATION PLAN
SCALE: 1/2"=1'-0"

0 6" 1' 2' 4' 6'
SCALE: 1/2"=1'-0"

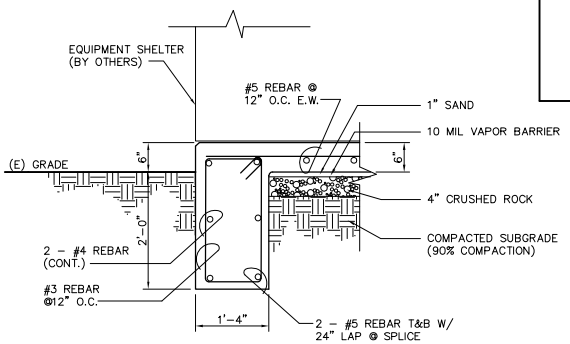

EQUIPMENT SHELTER FOUNDATION DETAIL 1
SCALE: 1"=1'-0"

0 3" 6" 1' 2' 3'
SCALE: 1"=1'-0"

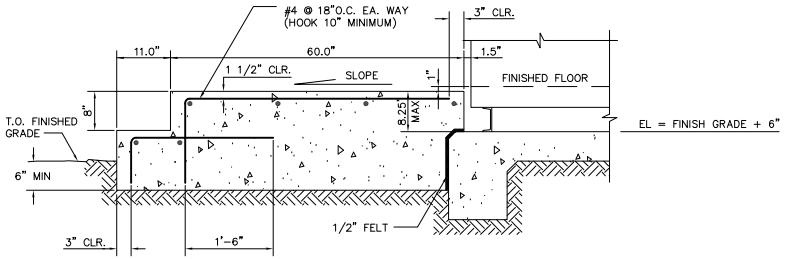

STOOP DETAIL
SCALE: 1"=1'-0"

0 3" 6" 1' 2' 3'
SCALE: 1"=1'-0"

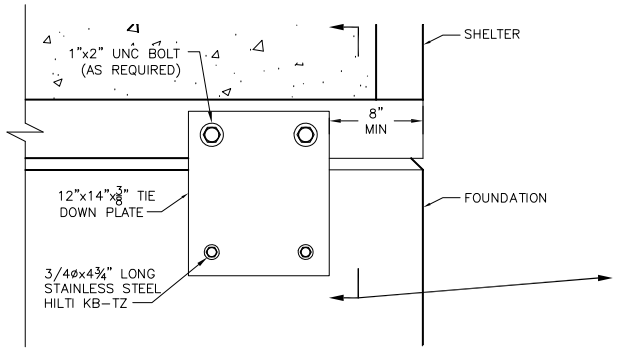

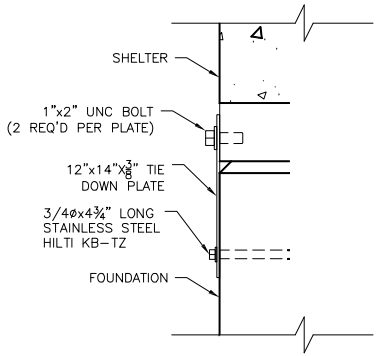

EQUIPMENT SHELTER ANCHOR DETAILS 2
SCALE: NONE

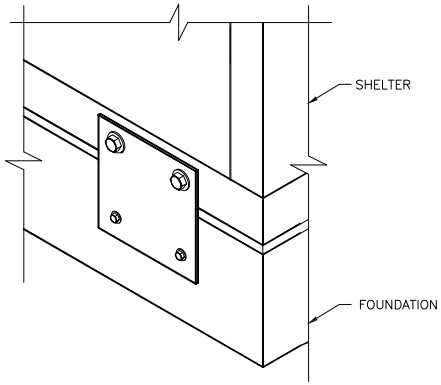

L.D. STROBEL CO. INC.
DESIGN / CONSTRUCTION
WIRELESS COMMUNICATIONS
1022 SHARY CIRCLE, SUITE 9, CONCORD, CA. 94518
PHONE: 925-686-3241 FAX: 925-686-3350

REVISIONS

NO.	DATE	DESCRIPTION
1	2/8/22	90% ZD
2	6/23/22	100% ZD/CD
3	7/25/22	100% ZD/CD Rev A
4	7/29/22	100% ZD/CD Rev B
5	8/20/23	100% ZD/CD FINAL
6	9/25/23	100% ZD/CD FINAL

SITE ADDRESS:
2001 STRAUCH DRIVE
ROSEVILLE, CA 95661
PLACER COUNTY
APN: 048-260-049

CITY OF ROSEVILLE
INFORMATION TECHNOLOGY
316 VERNON ST SUITE 300
ROSEVILLE, CA 95678

PROPOSED EQUIPMENT INSTALLATION
STRAUCH DRIVE

CITY OF ROSEVILLE CALIFORNIA

DRAWN: jjg DATE: 7/19/22
FILE: 9276-A1
SHEET NO.
A-9

PROJECT NUMBER: EN22-0684

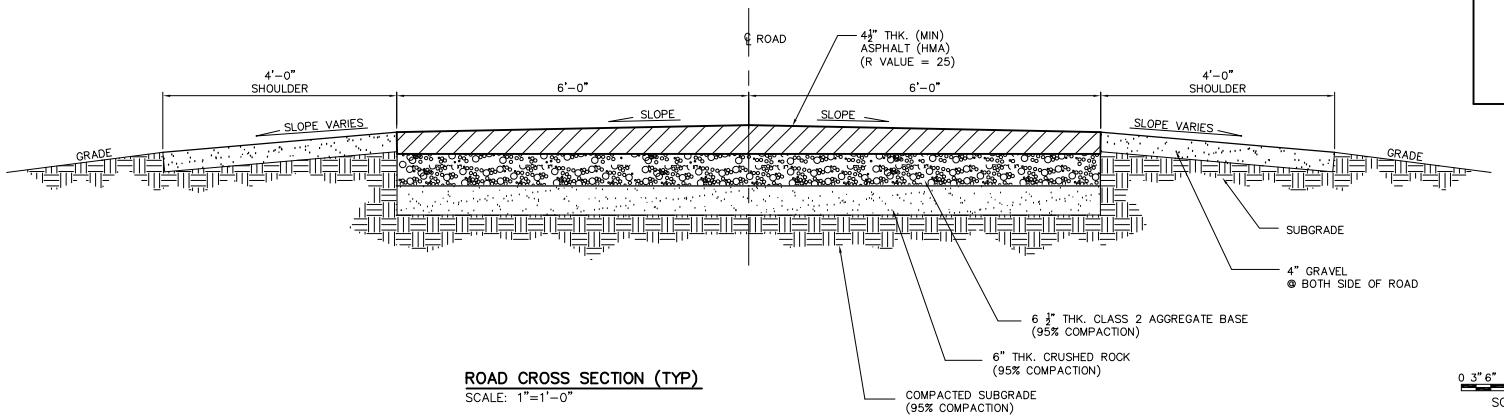

ROAD CROSS SECTION (TYP)
SCALE: 1"=1'-0"

0 3" 6" 1' 2' 3'
SCALE: 1"=1'-0"

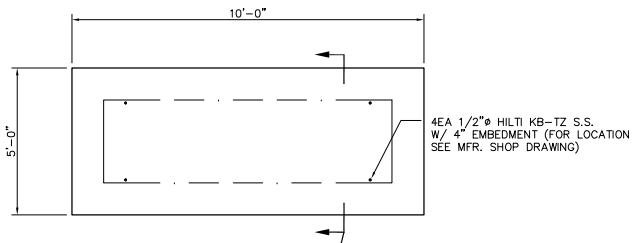

GENERATOR FOUNDATION PLAN
SCALE: 1/2"=1'-0"

0 6" 1' 2' 4' 6'
SCALE: 1/2"=1'-0"

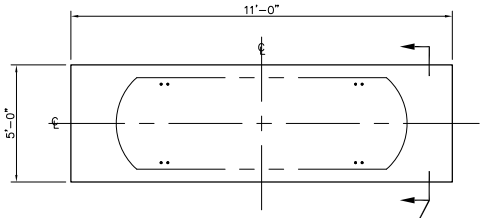

PROPANE TANK FOUNDATION PLAN
SCALE: 1/2"=1'-0"

0 6" 1' 2' 4' 6'
SCALE: 1/2"=1'-0"

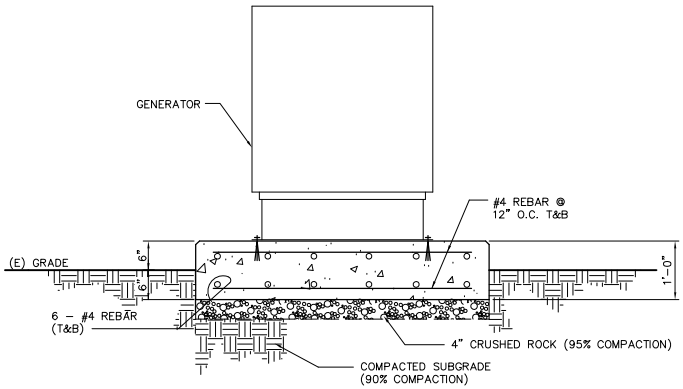

GENERATOR FOUNDATION - SECTION
SCALE: 1"=1'-0"

0 3" 6" 1' 2' 3'
SCALE: 1"=1'-0"

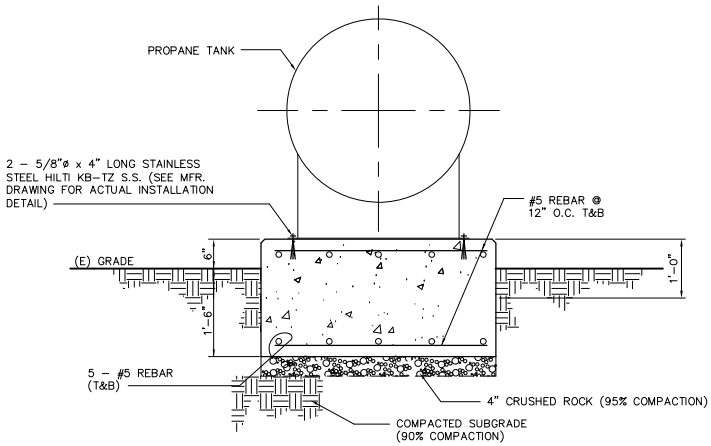

PROPANE TANK FOUNDATION - SECTION
SCALE: 1"=1'-0"

0 3" 6" 1' 2' 3'
SCALE: 1"=1'-0"

L.D. STROBEL CO. INC.
DESIGN / CONSTRUCTION
WIRELESS COMMUNICATIONS
1022 SHARY CIRCLE, SUITE 9, CONCORD, CA. 94518
PHONE: 925-686-3241 FAX: 925-686-3350

REGISTERED PROFESSIONAL ENGINEER
CONRAD L. ALFARO
NO C28699
EXPIRE 3-31-25
CIVIL
STATE OF CALIFORNIA

REVISIONS

NO.	DATE	DESCRIPTION
1	2/8/22	90% ZD
2	6/23/22	100% ZD/CD
3	7/25/22	100% ZD/CD Rev A
4	7/29/22	100% ZD/CD Rev B
5	8/20/23	100% ZD/CD FINAL
6	9/25/23	100% ZD/CD FINAL

SITE ADDRESS:
2001 STRAUCH DRIVE
ROSEVILLE, CA 95661
PLACER COUNTY
APN: 048-260-049

CITY OF ROSEVILLE
INFORMATION TECHNOLOGY
316 VERNON ST SUITE 300
ROSEVILLE, CA 95678

PROPOSED EQUIPMENT INSTALLATION
STRAUCH DRIVE

CITY OF ROSEVILLE CALIFORNIA

DRAWN: jjg DATE: 10/16/23
FILE: 9276-A1
SHEET NO.
A-10

GENERAC

70 • 80 • 100 • 130 • 150 kW — application & engineering data

GENERATOR SPECIFICATIONS

Type	Synchronous
Rotor Insulation Class	H
Stator Insulation Class	H
Telephone Interference Factor (TIF)	<50
Alternator Output Leads 1-Phase	4 wire
Alternator Output Leads 3-Phase	6 wire (70, 80 & 150 kW) or 12 wire (100 & 130 kW)
Bearings	Sealed Ball
Coupling	Flexible Disc (70, 80 & 150 kW) or Gear Drive (100 & 130 kW)
Excitation System	Brushless

VOLTAGE REGULATION

Type	Electronic
Sensing	Single Phase
Regulation	± 1%

GOVERNOR SPECIFICATIONS

Type	Electronic
Frequency Regulation	Isochronous
Steady State Regulation	± 0.25%

ELECTRICAL SYSTEM

Battery Charge Alternator	12 Volt 30 Amp
Static Battery Charger	2 Amp
Recommended Battery (battery not included)	Group 24F, 525 CCA (70, 80 & 150 kW) or Group 27F, 700 CCA (100 & 130 kW)
System Voltage	12 Volts

GENERATOR FEATURES

Revolving field heavy duty generator
Directly connected to the engine
Operating temperature rise 120 °C above a 40 °C ambient
Class H insulation is NEMA rated
All models fully prototyped tested

ENCLOSURE FEATURES

Aluminum weather protective enclosure	Ensures protection against mother nature. Electrostatically applied textured epoxy paint for added durability.
Enclosed critical grade muffler	Quiet, critical grade muffler is mounted inside the unit to prevent injuries.
Small, compact, attractive	Makes for an easy, eye appealing installation.
SAE	Sound attenuated enclosure ensures quiet operation

(All ratings in accordance with BS5514, ISO3046, ISO8528, SAE J1349 and DIN6271)

ENGINE SPECIFICATIONS: 80 kW

Make	Generac
Model	V-Type
Cylinders	8
Displacement (Liters)	5.4
Bore (in/mm)	3.55/90.2
Stroke (in/mm)	4.17/105.9
Compression Ratio	9:1
Intake Air System	Naturally Aspirated
Lifter Type	Hydraulic

ENGINE SPECIFICATIONS: 70, 100, 130 & 150 kW

Make	Generac
Model	V-Type
Cylinders	10
Displacement (Liters)	6.8
Bore (in/mm)	3.55/90.2
Stroke (in/mm)	4.17/105.9
Compression Ratio	9:1
Intake Air System	Naturally Aspirated
Lifter Type	Hydraulic

ENGINE LUBRICATION SYSTEM

Oil Pump Type	Gear
Oil Filter Type	Full flow spin-on cartridge
Crankcase Capacity (qt/l)	5/4.7 (70, 100, 130 & 150 kW) or 6/5.7 (80 kW)

ENGINE COOLING SYSTEM

Type	Closed
Water Pump	Belt driven
Fan Speed (rpm)	2300 - 70 kW 2174 - 80 kW 1670 - 100 kW 1950 - 130 kW 2200 - 150 kW
Fan Diameter (in/mm)	22/558.8 (70 kW) or 26/660.4 (80, 100, 130 & 150 kW)
Fan Mode	Pusher (70 kW) or Puller (80, 100, 130 & 150 kW)

FUEL SYSTEM

Fuel Type	Natural gas, propane vapor
Carburetor	Down Draft
Secondary Fuel Regulator	Standard
Fuel Shut Off Solenoid	Standard
Operating Fuel Pressure	11-14" water column/21-26 mm HG

GENERAC

70 • 80 • 100 • 130 • 150 kW — operating data

GENERATOR OUTPUT VOLTAGE/KW - 60 Hz

		kW LPG	Amp LPG	kW Nat. Gas	Amp Nat. Gas	CB Size (Both)
QT070	120/240 V, 1Ø, 1.0 pf	67	292	64	267	300
	120/208 V, 3Ø, 0.8 pf	70	243	67	232	300
	120/240 V, 3Ø, 0.8 pf	70	211	67	201	250
	277/480 V, 3Ø, 0.8 pf	70	105	67	101	125
QT080	120/240 V, 1Ø, 1.0 pf	77	333	77	333	400
	120/208 V, 3Ø, 0.8 pf	80	278	80	278	300
	120/240 V, 3Ø, 0.8 pf	80	241	80	240	300
	277/480 V, 3Ø, 0.8 pf	80	120	80	120	150
QT100	120/240 V, 1Ø, 1.0 pf	100	417	89	371	450
	120/208 V, 3Ø, 0.8 pf	100	347	94	326	400
	120/240 V, 3Ø, 0.8 pf	100	301	94	283	350
	277/480 V, 3Ø, 0.8 pf	100	150	94	141	175
QT130	120/240 V, 1Ø, 1.0 pf	130	542	117	488	600
	120/208 V, 3Ø, 0.8 pf	130	451	122	423	500
	120/240 V, 3Ø, 0.8 pf	130	391	122	367	450
	277/480 V, 3Ø, 0.8 pf	130	195	122	183	225
QT150	120/240 V, 1Ø, 1.0 pf	144	625	136	567	700
	120/208 V, 3Ø, 0.8 pf	150	520	142	493	600
	120/240 V, 3Ø, 0.8 pf	150	451	142	427	500
	277/480 V, 3Ø, 0.8 pf	150	225	142	214	250

SURGE CAPACITY IN AMPS

		Voltage Dip @ < .4 pf 15%	30%
QT070	120/240V, 1Ø	129	356
	120/208V, 3Ø	194	471
	120/240V, 3Ø	168	408
	277/480V, 3Ø	83	201
QT080	120/240V, 1Ø	174	435
	120/208V, 3Ø	186	466
	120/240V, 3Ø	161	404
	277/480V, 3Ø	70	175
QT100	120/240V, 1Ø	150	413
	120/208V, 3Ø	186	452
	120/240V, 3Ø	161	392
	277/480V, 3Ø	107	261
QT130	120/240V, 1Ø	236	648
	120/208V, 3Ø	364	885
	120/240V, 3Ø	315	767
	277/480V, 3Ø	161	390
QT150	120/240V, 1Ø	486	1214
	120/208V, 3Ø	534	1334
	120/240V, 3Ø	463	1156
	277/480V, 3Ø	250	624

ENGINE FUEL CONSUMPTION

		Natural Gas (ft³/hr)	Natural Gas (m³/hr)	Propane (gal/hr)	Propane (l/hr)	Propane (ft³/hr)
QT070	Exercise cycle	110	3.1	1.2	4.6	44
	25% of rated load	260	7.4	2.85	10.8	104
	50% of rated load	500	14.2	5.46	20.8	200
	75% of rated load	696	19.8	7.62	29.1	280
	100% of rated load	1020	29	11.17	42.6	411
QT080	Exercise cycle	95	2.7	1.4	5.51	53
	25% of rated load	549.5	15.6	3.46	13.11	126
	50% of rated load	784.4	22.2	6.62	25.1	241
	75% of rated load	1024.8	29.0	9.24	34.96	336
	100% of rated load	1252.2	35.5	12.78	48.38	465
QT100	Exercise cycle	130	3.7	1.4	5.4	52
	25% of rated load	371	10.5	4.1	15.5	149
	50% of rated load	713	20.3	7.9	29.8	287
	75% of rated load	991	28.2	11	41.5	400
	100% of rated load	1260	35.8	13.9	52.6	507
QT130	Exercise cycle	135	3.8	1.4	5.7	55
	25% of rated load	482	13.7	5.3	20	193
	50% of rated load	927	26.3	10.3	38.7	373
	75% of rated load	1292	36.7	14.3	54	520
	100% of rated load	1786	50.8	19.8	74.6	719
QT150	Exercise cycle	155	4.4	1.7	6.5	63
	25% of rated load	556	15.8	6.09	23.2	224
	50% of rated load	1070	30.4	11.72	44.7	431
	75% of rated load	1491	42.4	16.33	62.3	600
	100% of rated load	2061	58.6	22.57	86.1	830

Note: **Fuel pipe must be sized for full load.**

For Btu content, multiply gal/hr x 90950 (LP) or ft³/hr x 1000 (NG).

For megajoule content, multiply l/hr x 25.35 (LP) or m³/hr x 37.26 (NG).

Refer to "Emissions Data Sheets" for maximum fuel flow for EPA and SCAQMD permitting purposes.

STANDBY RATING: Standby ratings apply to installations served by a reliable utility source. The standby rating is applicable to varying loads for the duration of a power outage. There is no overload capability for this rating. Ratings are in accordance with ISO-3046-1. Design and specifications are subject to change without notice.

GENERAC

70 • 80 • 100 • 130 • 150 kW — operating data

ENGINE COOLING

	70 kW	80 kW	100 kW	130 kW	150 kW
Air flow (inlet air including alternator and combustion air in ft³/min)	5200/147.2	5300/150.1	5500/155.7	6450/182.6	7800/220.9
System coolant capacity (gal/liters)	4.5/17	4/15.1	4.5/17	4.5/17	4.5/17
Heat rejection to coolant (BTU/hr)	287,000/302.8	316,000/333.4	342,000/360.8	496,000/523.3	558,000/599.3
Maximum operation air temperature on radiator (°C/°F)			60/150		
Maximum ambient temperature (°C/°F)			50/140		

COMBUSTION REQUIREMENTS

	70 kW	80 kW	100 kW	130 kW	150 kW
Flow at rated power (cfm/cmm)	205/5.8	143/4	262/7.4	336/9.5	410/11.6

SOUND EMISSIONS

	70 kW	80 kW	100 kW	130 kW	150 kW
Sound output in dB(A) at 23 ft (7 m) with generator in exercise mode*	64	65	68	69	66
Sound output in dB(A) at 23 ft (7 m) with generator operating at normal load*	72	74	72	71	79

*Sound levels are taken from the front of the generator. Sound levels taken from other sides of the generator may be higher depending on installation parameters.

EXHAUST

	70 kW	80 kW	100 kW	130 kW	150 kW
Exhaust flow at rated output (cfm/cmm)	557/15.8	720/20.4	888/25.1	1119/31.7	1535/43.5
Exhaust temperature at muffler outlet (°C/°F)	477/890	796/1465	516/950	521/970	593/1100

ENGINE PARAMETERS

	70 kW	80 kW	100 kW	130 kW	150 kW
Rated Synchronous rpm	1800	3600	2300	2970	3600

POWER ADJUSTMENT FOR AMBIENT CONDITIONS

Temperature Deration ... 3% for every 10 °C above 25 °C or 1.65% for every 10 °F above 77 °F
Altitude Deration (70, 100, 130 & 150) ... 1% for every 100 m above 183 m or 3% for every 1000 ft above 600 ft
Altitude Deration (80 kW) ... 1% for every 100 m above 915 m or 3% for every 1000 ft above 3000 ft

CONTROLLER FEATURES

2-Line Plain Text LCD Display ... Simple user interface for ease of operation
Mode Switch: Auto ... Automatic Start on Utility failure. 7 day exerciser
Off ... Stops unit. Power is removed. Control and charger still operate
Manual ... Start with starter control, unit stays on. If utility fails, transfer to load takes place
Programmable start delay between 10-30 seconds ... Standard
Engine Start Sequence ... Cyclic cranking: 16 sec on, 7 rest (90 sec maximum duration)
Engine Warm-up ... 5 sec
Engine Cool-Down ... 1 min
Starter Lock-out ... Starter cannot re-engage until 5 sec after engine has stopped
Smart Battery Charger ... Standard
Automatic Voltage Regulation with Over and Under Voltage Protection ... Standard
Automatic Low Oil Pressure Shutdown ... Standard
Overspeed Shutdown ... Standard, 72 Hz
High Temperature Shutdown ... Standard
Overcrank Protection ... Standard
Safety Fused ... Standard
Failure to Transfer Protection ... Standard
Low Battery Protection ... Standard
50 Event Run Log ... Standard
Future Set Capable Exerciser ... Standard
Incorrect Wiring Protection ... Standard
Internal Fault Protection ... Standard
Common External Fault Capability ... Standard
Governor Failure Protection ... Standard

GENERAC

70 • 80 • 100 • 130 • 150 kW — available accessories

Model #	Product	Description
G006463-4	Mobile Link™	Generac's Mobile Link allows you to check the status of your generator from anywhere that you have access to an Internet connection from a PC or with any smart device. You will even be notified when a change in the generator's status occurs via e-mail or text message. Note: Harness Adapter Kit required. Available in the U.S. only.
G006478-0	Harness Adapter Kit	The Harness Adapter Kit is required to make liquid-cooled units compatible with Mobile Link™.
G005632-1 - 70, 80 & 150 kW G005633-0 - 100 & 130 kW	Cold Weather Kit	If the temperature regularly falls below 32 °F (0 °C), install a cold weather kit to maintain optimal battery temperature. Kit consists of battery warmer with thermostat built into the wrap.
G005620-0 - 70, 100 & 130 kW G006204-0 - 80 kW G005667-0 - 150 kW	Extreme Cold Weather Kit	Recommended where the temperature regularly falls below 32 °F (0 °C) for extended periods of time. For liquid cooled units only.
G005651-0	Base Plug Kit	Add base plugs to the base of the generator to keep out debris.
G005703-0	Paint Kit	If the generator enclosure is scratched or damaged, it is important to touch-up the paint to protect from future corrosion. The paint kit includes the necessary paint to properly maintain or touch-up a generator enclosure.
G005660-0 - 70, 100, 130, and 150 kW G006915-0 - 80 kW	Scheduled Maintenance Kit	The Liquid-Cooled Scheduled Maintenance Kits offer all the hardware necessary to perform complete maintenance on Generac liquid-cooled generators.
G006664-0	Local Wireless Monitor	Completely wireless and battery powered, Generac's wireless remote monitor provides you with instant status information without ever leaving the house.
G006665-0	Wireless Remote Extension Harness	Recommended for use with the Wireless Remote on units up to 60 kW, required for use on units 70 kW or greater.
G006873-0	Smart Management Module (50 Amps)	Smart Management Modules are used in conjunction with the Automatic Transfer Switch to increase its power management capabilities. It provides additional power management flexibility not found in any other power management system.
G007005-0	Wi-Fi LP Fuel Level Monitor	The Wi-Fi enabled LP fuel level monitor provides constant monitoring of the connected LP fuel tank. Monitoring the LP tank's fuel level is an important step in making sure your generator is ready to run during an unexpected power failure. Status alerts are available through a free application to notify when your LP tank is in need of a refill.
G006510-0	E-Stop	E-stop allows for immediate fuel shutoff and generator shutdown in the event of anemergency.

GENERAC

70 • 80 • 100 • 130 • 150 kW — interconnections

Drawing #0H7452-D

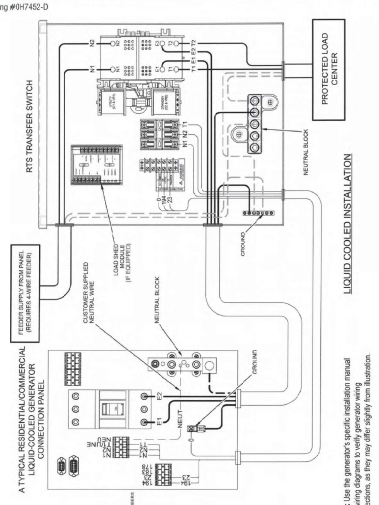

Note: Use the generator's specific installation manual and wiring diagrams to verify generator wiring connections, as they may differ slightly from illustration.

GENERAC

70 kW — installation layout

Drawing #0F6287-E

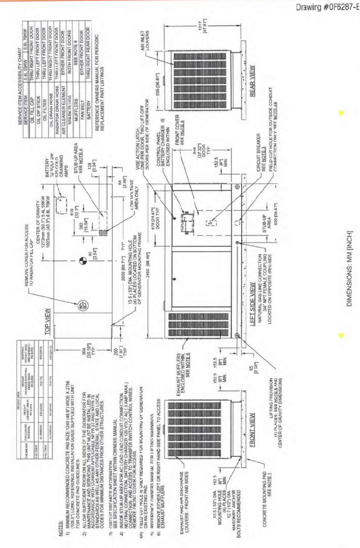

PROJECT NUMBER: EN22-0684

L. D. STROBEL CO. INC.
DESIGN / CONSTRUCTION
WIRELESS COMMUNICATIONS
1022 SHARY CIRCLE, SUITE 9, CONCORD, CA. 94518
PHONE: 925-686-3241 FAX: 925-686-3350

REGISTERED PROFESSIONAL ENGINEER CONRAD L. ALFARO NO C28699 EXPIRE 3-31-25 CIVIL STATE OF CALIFORNIA

REVISIONS

NO.	DATE	DESCRIPTION
1	2/8/22	90% ZD
2	6/23/22	100% ZD/CD
3	7/25/22	100% ZD/CD Rev A
4	7/29/22	100% ZD/CD Rev B
5	8/20/23	100% ZD/CD FINAL
6	9/25/23	100% ZD/CD FINAL

SITE ADDRESS:
2001 STRAUCH DRIVE
ROSEVILLE, CA 95661
PLACER COUNTY
APN: 048-260-049

CITY OF ROSEVILLE
INFORMATION TECHNOLOGY
316 VERNON ST SUITE 300
ROSEVILLE, CA 95678

CITY OF ROSEVILLE CALIFORNIA

PROPOSED EQUIPMENT INSTALLATION
STRAUCH DRIVE

DRAWN: jjg DATE: 7/18/22
FILE: 9276-A1
SHEET NO.
A-11

GENERATOR SPECIFICATIONS
SCALE: NONE

GENERAL ELECTRICAL NOTES

1. SUBMITTAL OF BID INDICATES CONTRACTOR IS COGNIZANT OF ALL JOB SITE CONDITIONS AND WORK TO BE PERFORMED UNDER THIS CONTRACT.
2. CONTRACTOR SHALL PERFORM ALL VERIFICATION OBSERVATION TESTS, AND EXAMINATION WORK PRIOR TO THE ORDERING OF THE ELECTRICAL EQUIPMENT AND THE ACTUAL CONSTRUCTION. CONTRACTOR SHALL ISSUE A WRITTEN NOTICE OF ALL FINDINGS TO THE ARCHITECT LISTING ALL MALFUNCTIONS, FAULTY EQUIPMENT AND DISCREPANCIES.
3. HEIGHTS SHALL BE VERIFIED WITH OWNER PRIOR TO INSTALLATION.
4. THESE PLANS ARE DIAGRAMMATIC ONLY, FOLLOW AS CLOSELY AS POSSIBLE.
5. EACH CONDUCTOR OF EVERY SYSTEM SHALL BE PERMANENTLY TAGGED IN EACH PANELBOARD, PULLBOX, J-BOX, SWITCH BOX, ETC., IN COMPLIANCE WITH OCCUPATIONAL SAFETY AND HEALTH ACT (O.S.H.A.)
6. CONTRACTOR SHALL PROVIDE ALL LABOR, MATERIALS, INSURANCE, EQUIPMENT, INSTALLATION, CONSTRUCTION TOOLS, TRANSPORTATION, ETC., FOR A COMPLETE AND PROPERLY OPERATIVE SYSTEM ENERGIZED THROUGHOUT AND AS INDICATED ON DRAWINGS, AS SPECIFIED HEREIN AND/OR AS OTHERWISE REQUIRED.
7. ALL MATERIALS AND EQUIPMENT SHALL BE NEW AND IN PERFECT CONDITION WHEN INSTALLED AND SHALL BE OF THE BEST GRADE AND OF THE SAME MANUFACTURER THROUGHOUT FOR EACH CLASS OR GROUP OF EQUIPMENT. MATERIALS SHALL BE LISTED AND APPROVED BY UNDERWRITER'S LABORATORY AND SHALL BEAR THE INSPECTION LABEL "J" WHERE SUBJECT TO SUCH APPROVAL. MATERIALS SHALL MEET WITH APPROVAL OF THE DIVISON OF INDUSTRIAL SAFETY AND ALL GOVERNING BODIES HAVING JURISDICTION. MATERIALS SHALL BE MANUFACTURED IN ACCORDANCE WITH APPLICABLE STANDARDS ESTABLISHED BY ANSI, NEMA AND NBFU.
8. ALL CONDUIT INSTALLED SHALL BE SURFACE MOUNTED UNLESS OTHERWISE NOTED.
9. CONTRACTOR SHALL CARRY OUT HIS WORK IN ACCORDANCE WITH ALL GOVERNING STATE, COUNTY AND LOCAL CODES AND O.S.H.A.
10. CONTRACTOR SHALL SECURE ALL NECESSARY BUILDING PERMITS AND PAY ALL REQUIRED FEES
11. COMPLETE JOB SHALL BE GUARANTEED FOR A PERIOD OF ONE (1) YEAR AFTER THE DATE OF JOB ACCEPTANCE BY OWNER. ANY WORK, MATERIAL OR EQUIPMENT FOUND TO BE FAULTY DURING THAT PERIOD SHALL BE CORRECTED AT ONCE, UPON WRITTEN NOTIFICATION, AT THE EXPENSE OF THE CONTRACTOR.
12. ALL CONDUIT ONLY (C.O.) SHALL HAVE A PULL WIRE OR ROPE AND A TRUE TAPE.
13. PROVIDE PROJECT MANAGER WITH ONE SET OF COMPLETE ELECTRICAL "AS INSTALLED" DRAWINGS AT THE COMPLETION OF THE JOB, SHOWING ACTUAL DIMENSIONS, ROUTINGS, AND CIRCUITS.
14. ALL BROCHURES, OPERATING MANUALS, CATALOGS, SHOP DRAWINGS, ETC. SHALL BE TURNED OVER TO OWNER AT JOB COMPLETION.
15. ALL CONDUCTORS SHALL BE COPPER 90 DEGRESS C. ALL HARDWARE SHOULD BE STAINLESS.
16. ALL CIRCUIT BREAKERS, FUSES AND ELECTRICAL EQUIPMENT SHALL HAVE AN INTERRUPTING RATING NOT LESS THE MAXIMUM SHORT CIRCUIT CURRENT TO WHICH THEY MAY BE SUBJECTED, AND A MINIMUM OF 10,000 A.I.C.
17. THE ENTIRE ELECTRICAL INSTALLATION SHALL BE GROUNDED AS REQUIRED BY ALL APPLICABLE CODES
18. PATCH, REPAIR AND PAINT ANY AREA THAT HAS BEEN DAMAGED IN THE COURSE OF THE ELECTRICAL WORK.
19. IN DRILLING HOLES INTO CONCRETE WHETHER FOR FASTENING OR ANCHORING PURPOSES, OR PENETRATIONS THROUGH THE FLOOR FOR CONDUIT RUNS, PIPE RUNS, ETC., IT MUST BE CLEARLY UNDERSTOOD THAT TENDONS AND/OR REINFORCING STEEL WILL NOT BE DRILLED INTO, CUT OR DAMAGED UNDER ANY CIRCUMSTANCES.
20. LOCATION OF TENDONS AND/OR REINFORCING STEEL ARE NOT DEFINITELY KNOWN AND THEREFORE MUST BE SEARCHED FOR BY APPROPRIATE METHODS AND EQUIPMENT VIA X-RAY OR OTHER DEVICES THAT CAN ACCURATELY LOCATE THE REINFORCING AND/OR STEEL TENDONS.
21. PENETRATIONS IN FIRE RATED WALLS SHALL BE FIRE STOPPED IN ACCORDANCE WITH APPLICABLE LOCAL BUILDING CODES USING U.L. RATED MATERIALS.
22. WIRE AND CABLE CONDUCTORS SHALL BE COPPER #12 AWG MINIMUM UNLESS SPECIFICALLY NOTED OTHERWISE ON DRAWINGS.
23. GROUNDING CONDUCTORS SHALL BE AS INDICATED ON GROUNDING PLAN.
24. GROUND RODS SHALL BE COPPER CLAD STEEL, 5/8" ROUND AND 10' LONG. COPPERWELD OR APPROVED EQUAL.
25. METER SOCKET AMPERES, VOLTAGE, NUMBER OF PHASES SHALL BE AS NOTED ON THE DRAWINGS. MANUFACTURED BY SQUARE "D" COMPANY OR APPROVED EQUAL.
26. ALL EXTERIOR WALL PENETRATIONS SHALL BE SEALED WITH POLYSEAM SEALANT.
28. CONDUIT:
    a. RIGID CONDUIT SHALL BE U.L. LABEL GALVANIZED ZINC COATED WITH ZINC INTERIOR AND SHALL BE USED WHEN INSTALLED IN OR UNDER CONCRETE SLABS,IN CONTACT WITH THE EARTH, UNDER PUBLIC ROADWAYS, IN MASONRY WALLS OR EXPOSED ON BUILDING EXTERIOR. RIGID CONDUIT IN CONTACT WITH EARTH SHALL BE 1/2 LAPPED WRAPPED WITH HUNTS WRAP PROCESS NO. 5. INTERMEDIATE METAL CONDUIT (IMC) MAY BE SUBSTITUTED FOR RIGID CONDUIT ONLY WHEN ABOVE GROUND AND EXPOSED.
    b. ELECTRICAL METALLIC TUBING SHALL HAVE U.L. LABEL, FITTINGS SHALL BE GLAND RING COMPRESSION TYPE. EMT SHALL BE USED ONLY FOR INTERIOR RUNS.
    c. FLEXIBLE METALIC CONDUIT SHALL HAVE U.L. LISTED LABEL AND MAY BE USED WHERE PERMITTED BY CODE. FITTINGS SHALL BE "JAKE" OR "SQUEEZE" TYPE, SEAL TIGHT FLEXIBLE CONDUIT. ALL CONDUIT IN EXCESS OF SIX FEET IN LENGTH SHALL HAVE FULL SIZE GROUND WIRE.
    d. CONDUIT RUNS MAY BE SURFACE MOUNTED IN CEILINGS OR WALLS UNLESS INDICATED OTHERWISE. CONDUIT INDICATED SHALL RUN PARALLEL OR AT RIGHT ANGLES TO CEILING, FLOOR OR BEAMS. VERIFY EXACT ROUTING OF ALL EXPOSED CONDUIT WITH ARCHITECT PRIOR TO INSTALLING.
    e. ALL UNDERGROUND CONDUIT SHALL BE PVC SCHEDULE 40 (UNLESS NOTED OTHERWISE) AT A MINIMUM DEPTH OF 24" BELOW GRADE, OR GREATER IF REQUIRED OTHERWISE) AT BY LOCAL CODE.
    I CONDUIT IS FOR UTILITIES, DEPTH IS BY LOCAL CODE OR SERVICE PROVIDER, WHICH EVER IS GREATER.
29. ALL ELECTRICAL EQUIPMENT SHALL BE LABELED WITH PERMANENT ENGRAVED PLASTIC LABELS.
30. COORDINATE THE ELECTRICAL SERVICE WITH THE UTILITY COMPANY.
31. GROUNDING SYSTEM RESISTANCE SHALL NOT EXCEED 5 OHMS. IF THE RESISTANCE VALUE IS EXCEEDED, NOTIFY THE OWNER FOR FURTHER INSTRUCTION ON METHODS FOR REDUCING THE RESISTANCE VALUE. SUBMIT TEST REPORTS AND FURNISH TO OWNER ONE COMPLETE SET OF PRINTS SHOWING "INSTALLED WORK".
32. UPON COMPLETION OF WORK, CONDUCT CONTINUITY, SHORT CIRCUIT, AND FALL OF POTENTIAL GROUNDING TESTS FOR APPROVAL. SUBMIT TEST REPORTS TO PROJECT MANAGER.
33. CLEAN PREMISES OF ALL DEBRIS RESULTING FROM WORK AND LEAVE WORK IN A COMPLETE AND UNDAMAGED CONDITION.
34. CONTRACTOR TO COORDINATE WITH UTILITY COMPANY FOR CONNECTION OF TEMPORARY AND PERMANENT POWER TO THE SITE. THE TEMPORARY POWER AND ALL HOOKUP COSTS TO BE PAID BY CONTRACTOR.

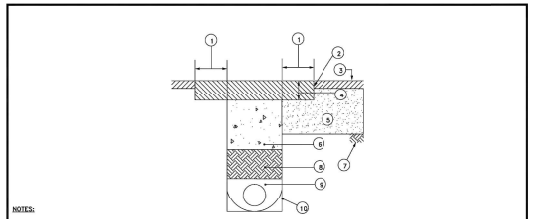

NOTES:
1. 18 INCH KEY OUTSIDE TRENCH LINE
2. COAT ALL EXISTING VERTICAL FACES WITH ASPHALTIC EMULSION (TACK) PRIOR TO PAVING
3. EXISTING PAVING
4. PATCH SHALL BE THICKNESS OF EXISTING SECTION PLUS 2 1/2 INCHES. PER CITY TRENCH CUT ORDINANCE (6 INCH MINIMUM THICKNESS).
5. AGGREGATE BASE/SUBBASE: RECOMPACT DISTURBED SURFACE AREAS TO 95%.
6. TWO FEET OF TWO SACK CONCRETE SLURRY PER CALTRANS STANDARD SPECIFICATION 19-.062
7. NATIVE SOIL
8. NATIVE SOIL TO BE PROCESSED TO 90% RELATIVE COMPACTION.
9. FOR PIPE EMBEDMENT, SEE THE FOLLOWING CONDITIONS:
   a. TB-2 FOR PLASTIC STORM DRAIN PIPE
   b. SS-1 FOR SEWER PIPE
   c. SS-1 FOR WASTE WATER PIPE
   d. FOR REINFORCED CONCRETE PIPE, PLACE 1/3 OR 3/4 INCH CRUSHED ROCK UP TO SPRING LINE WITH A MINIMUM OF FOUR INCHES OF BEDDING BELOW PIPE. MAINTAIN A MINIMUM OF SIX INCHES OF CLEARANCE BETWEEN THE PIPE AND THE TRENCH WALL.
10. ALTERNATE TRENCH BOTTOM. THE DIAMETER OF THE ALTERNATE, ROUNDED TRENCH BOTTOM SHALL EQUAL THE WIDTH OF THE TRENCH.

NOTE: THIS DETAIL APPLIES TO UTILITY TRENCHES IN WHICH TRENCH CUT FEES WERE NOT PAID BY THE APPLICANT, OR AS SPECIFIED BY THE ENGINEER.

JASON SHYKOWSKI
PUBLIC WORKS DIRECTOR

ROSEVILLE — DEPARTMENT OF PUBLIC WORKS

DEEP CUT "T" PATCH RECONSTRUCTION ASPHALT STREETS

SCALE: NONE
REVISED: FEBRUARY 2021
DRAWN BY: R MEDINA
APPROVED BY: JASON SHYKOWSKI

TB-3

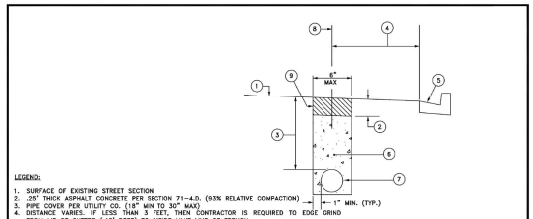

LEGEND:
1. SURFACE OF EXISTING STREET SECTION
2. .25" THICK ASPHALT CONCRETE PER SECTION 71-4.0. (95% RELATIVE COMPACTION)
3. PIPE COVER PER UTILITY CO. (18" MIN TO 30" MAX)
4. DISTANCE VARIES. IF LESS THAN 3 FEET, THEN CONTRACTOR IS REQUIRED TO EDGE GRIND FROM LIP OF GUTTER (.15" DEEP) TO INSIDE LIMIT LINE OF TRENCH
5. EXISTING CURB AND GUTTER
6. "MINOR CONCRETE" CONFORMING TO THE PROVISIONS IN SECTION 71-5B, "CONCRETE", WITH FINE AGGREGATE (PEA GRAVEL MIX). CONCRETE SHALL BE FLOW-ABLE AT DISCRETION OF CITY INSPECTOR
7. CONDUIT AS SPECIFIED
8. CENTER LINE OF BIKE LANE STRIPE
9. PLACE BINDER (TACK COAT) ON ALL SURFACES PRIOR TO PAVING PER SECTION 39 OF STATE STANDARD SPECIFICATIONS

NOTES:
1. THE CONTRACTOR IS RESPONSIBLE FOR REPLACEMENT OF BIKE LANE STRIPE AND LEGEND (AFFECTED BY TRENCHING) WITH THERMOPLASTIC MATERIAL.
2. ALL EXCAVATED AREAS IN THE PAVEMENT SHALL BE BACKFILLED, EXCEPT FOR THE TOP 0.25" BY THE END OF EACH WORK DAY. THE TOP .25" SHALL BE PLACED WITHIN 3 WORKING DAYS AFTER TRENCHING. DELINEATORS SHALL BE PLACED ON TEN FOOT CENTERS, AND WITHIN 1' OF EACH SIDE OF DRIVEWAYS IN THE INTERIM. REFER TO SECTION 6.2W.5 FOR TRANSITION LOCATIONS.
3. TRENCH CUT FEE SHALL APPLY PER CITY ORDINANCE. NO ALTERNATE TRENCH CONFIGURATION IS ALLOWED.
4. SEE DETAIL TS-13 FOR MULTIPLE CONDUIT PROVISIONS.

MARC STOUT
CITY ENGINEER

ROSEVILLE — DEVELOPMENT SERVICES DEPARTMENT

ROCK WHEEL TRENCH (IN EXISTING STREET)

SCALE: NONE
REVISED: JANUARY 1, 2016
DRAWN BY: J MCKINNEY
APPROVED BY: MARC STOUT

TB-4

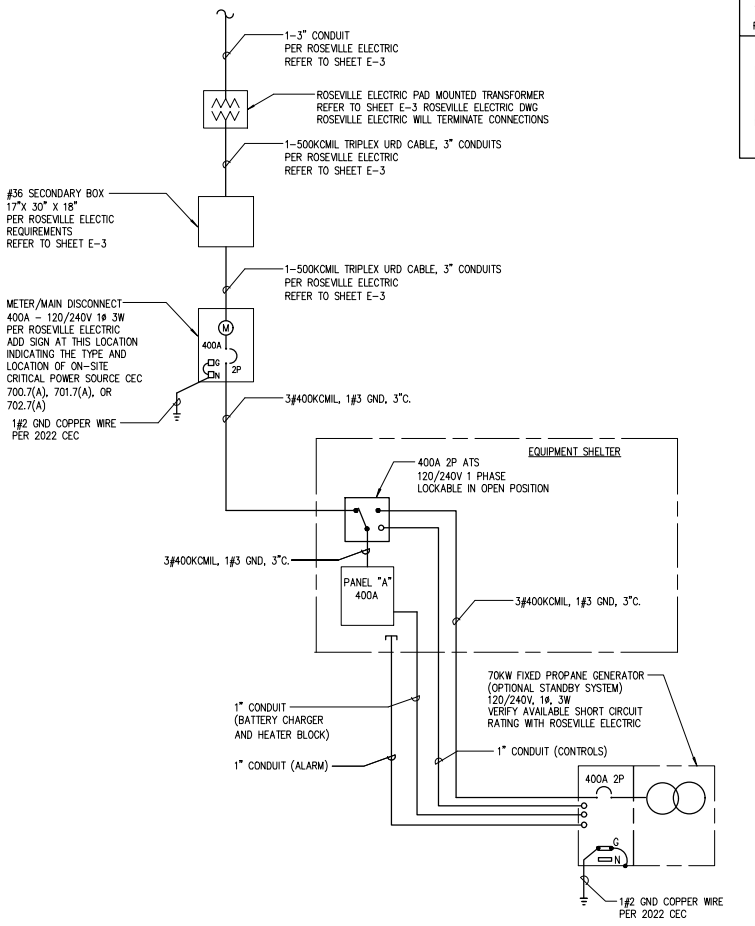

SINGLE LINE DIAGRAM

NO SCALE

1

L.D. STROBEL CO. INC.
DESIGN / CONSTRUCTION
WIRELESS COMMUNICATIONS
P.O. BOX 228 CONCORD, CA. 94522
PHONE: 925-686-3241 FAX: 925-686-3350

RANDALL LAMB
MEP ENGINEERING | SUSTAINABLE DESIGN
500 Washington Street, Suite 200
San Francisco, CA 94111
(415) 512-9771 phone
www.RandallLamb.com

REVISIONS

NO.	DATE	DESCRIPTION
1	07-06-22	REVIEW SET
2	08-14-23	100% CD

REGISTERED PROFESSIONAL ENGINEER
CHRISTOPHER W. LOO
E11718
ELECTRICAL
STATE OF CALIFORNIA

SITE ADDRESS:
2001 STRAUCH DRIVE
ROSEVILLE, CA 95661
PLACER COUNTY
APN: 048-260-049

CITY OF ROSEVILLE
INFORMATION TECHNOLOGY
316 VERNON ST SUITE 300
ROSEVILLE, CA 95678

PROPOSED EQUIPMENT INSTALLATION
STRAUCH DRIVE

CITY OF ROSEVILLE CALIFORNIA

DRAWN: RZ | DATE: 07-06-22
FILE: SF22130.00
SHEET NO.

E-1

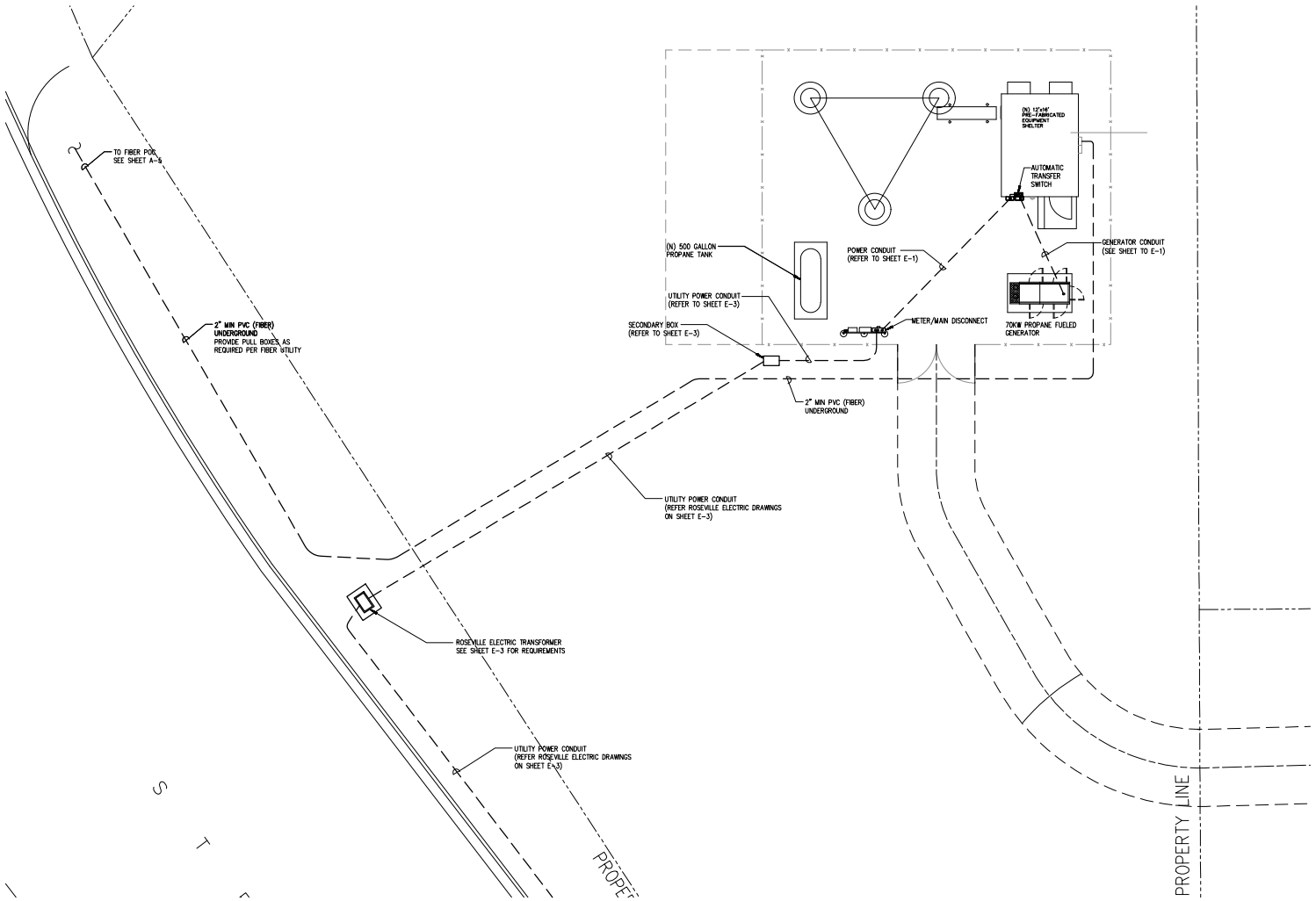

ELECTRICAL PLAN

SCALE: 1/8" = 1' - 0"

1

L. D. STROBEL CO. INC.
DESIGN / CONSTRUCTION
WIRELESS COMMUNICATIONS
P.O. BOX 228 CONCORD, CA. 94522
PHONE: 925-686-3241 FAX: 925-686-3350

RANDALL LAMB
MEP ENGINEERING | SUSTAINABLE DESIGN
500 Washington Street, Suite 200
San Francisco, CA 94111
(415) 812-9771 phone
www.RandallLamb.com

REVISIONS

NO.	DATE	DESCRIPTION
1	07-06-22	REVIEW SET
2	08-14-23	100% CD

REGISTERED PROFESSIONAL ENGINEER
CHRISTOPHER W. LOYD
E11718
ELECTRICAL
STATE OF CALIFORNIA

SITE ADDRESS:
2001 STRAUCH DRIVE
ROSEVILLE, CA 95661
PLACER COUNTY
APN: 048-260-049

CITY OF ROSEVILLE
INFORMATION TECHNOLOGY
316 VERNON ST SUITE 300
ROSEVILLE, CA 95678

PROPOSED EQUIPMENT INSTALLATION
STRAUCH DRIVE

CITY OF ROSEVILLE CALIFORNIA

DRAWN: RZ | DATE: 07-06-22
FILE: SF22130.00
SHEET NO.

E-2

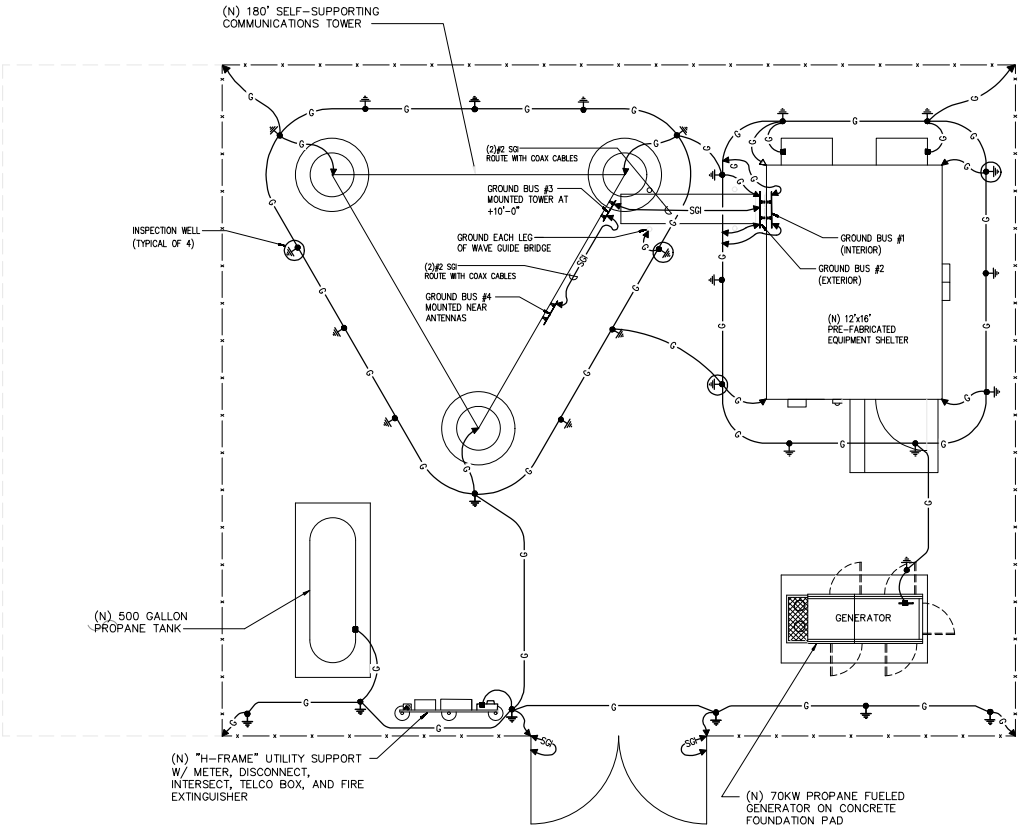

GROUNDING LEGEND	
SYMBOL	DESCRIPTION
●⊪	5/8" x 10'-0" COPPER OR STAINLESS STEEL COPPERCLAD GROUND ROD
▶	EXOTHERMIC WELD (CADWELD)
—G—	#2 SOLID TINNED COPPER WIRE
—SGI—	GROUND WIRE #2 STRANDED GREEN INSULATED WIRE.
■	MECHANICAL CONNECTION

REFER TO GROUNDING DETAILS ON SHEET E-5

MAXIMUM RESISTANCE SHALL NOT BE OVER 25 OHMS.
ADDITIONAL GROUNDS MAY BE REQUIRED TO SITE PER CEC 250.3(A)(2) EXCEPTION.

GROUNDING PLAN

SCALE: 1/4" = 1'-0"

1

L. D. STROBEL CO. INC.
DESIGN / CONSTRUCTION
WIRELESS COMMUNICATIONS
P.O. BOX 228 CONCORD, CA. 94522
PHONE: 925-686-3241 FAX: 925-686-3350

RANDALL LAMB
MEP ENGINEERING | SUSTAINABLE DESIGN
500 Washington Street, Suite 200
San Francisco, CA 94111
(415) 812-9771 phone
www.RandallLamb.com

REVISIONS

NO.	DATE	DESCRIPTION
1	07-06-22	REVIEW SET
2	08-14-23	100% CD

REGISTERED PROFESSIONAL ENGINEER CHRISTOPHER W. LOO E11718 ELECTRICAL STATE OF CALIFORNIA

SITE ADDRESS:
2001 STRAUCH DRIVE
ROSEVILLE, CA 95661
PLACER COUNTY
APN: 048-260-049

CITY OF ROSEVILLE
INFORMATION TECHNOLOGY
316 VERNON ST SUITE 300
ROSEVILLE, CA 95678

PROPOSED EQUIPMENT INSTALLATION
STRAUCH DRIVE

CITY OF ROSEVILLE CALIFORNIA

DRAWN: RZ | DATE: 07-06-22
FILE: SF22130.00
SHEET NO.

E-4

GROUNDING GENERAL NOTES

1. ALL DETAILS ARE SHOWN IN GENERAL TERMS. ACTUAL GROUNDING INSTALLATION AND CONSTRUCTION MAY VARY DUE TO SITE SPECIFIC CONDITIONS.
2. ALL EXTERIOR GROUNDING AND TOP OF GROUNDING RODS SHALL BE BURIED TO A MINIMUM DEPTH OF 1'-6" BELOW FINISH GRADE, ELECTRIC METER GROUND EXCEPTED.
3. ALL GROUNDING LEAD CONDUCTORS SHALL BE #2 SOLID TINNED BARE COPPER.
4. GROUND SYSTEM MUST BE TESTED AND SHALL HAVE A RESISTANCE OF LESS THAN 25 OHMS, SUBMIT AN INDEPENDENT FALL OF POTENTIAL TESTING REPORT.
5. NOTIFY PROJECT MANAGER IF THERE ARE ANY DIFFICULTIES INSTALLING GROUNDING SYSTEM DUE TO SITE SOIL CONDITIONS.
6. CHEMICAL GROUNDS SHALL BE KIT, CHEM-ROD OR APPROVED EQUAL, WHEN REQUIRED.
7. ALL UNDERGROUND GROUNDING CONNECTORS ARE TO BE CADWELDED ABOVE GRADE GROUNDING SHALL BE EITHER CADWELD OR MECHANICAL. AS SPECIFIED ON DRAWINGS.
8. ALL BUS BAR ATTACHMENT HARDWARE TO BE 3/8" STAINLESS.
9. ALL SYSTEM EXTERIOR GROUND BARS SHALL HAVE TO (2) #2 SGI COPPER WIRE CONNECTIONS.

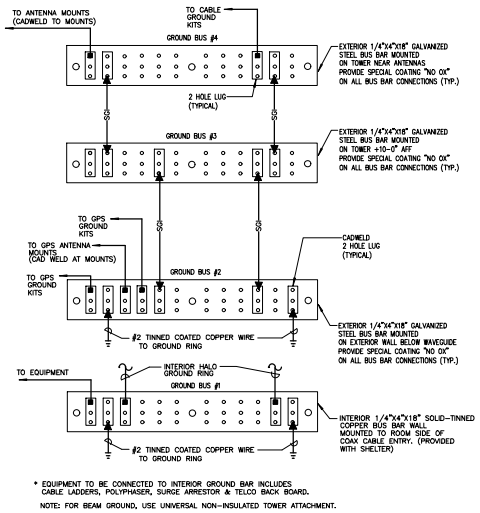

* EQUIPMENT TO BE CONNECTED TO INTERIOR GROUND BAR INCLUDES CABLE LADDERS, POLYPHASER, SURGE ARRESTOR & TELCO BACK BOARD.

NOTE: FOR BEAM GROUND, USE UNIVERSAL NON-INSULATED TOWER ATTACHMENT.

GROUND BUS DETAIL 3
NOT TO SCALE

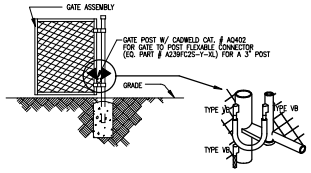

GATE GROUND DETAIL 5
NOT TO SCALE

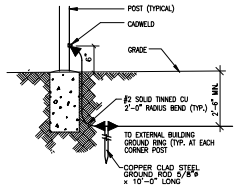

FENCE POST GROUND DETAIL 6
NOT TO SCALE

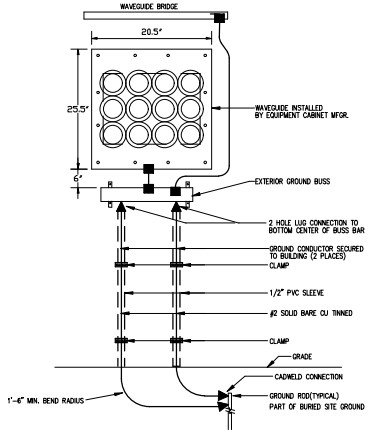

WAVEGUIDE GROUNDING DETAIL 4
NOT TO SCALE

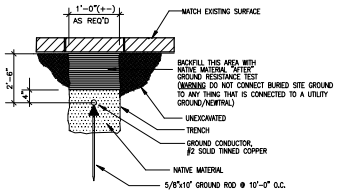

GROUND TRENCH DETAIL 1
NOT TO SCALE

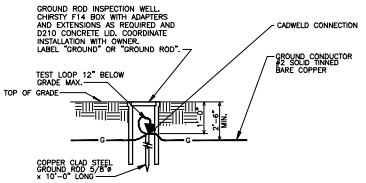

INSPECTION WELL DETAIL 2
NOT TO SCALE

L. D. STROBEL CO. INC.
DESIGN / CONSTRUCTION
WIRELESS COMMUNICATIONS
P.O. BOX 228 CONCORD, CA. 94522
PHONE: 925-686-3241 FAX: 925-686-3350

RANDALL LAMB
MEP ENGINEERING | SUSTAINABLE DESIGN
500 Washington Street, Suite 200
San Francisco, CA 94111
(415) 812-9771 phone
www.RandallLamb.com

REVISIONS

NO.	DATE	DESCRIPTION
1	07-06-22	REVIEW SET
2	08-14-23	100% CD

REGISTERED PROFESSIONAL ENGINEER CHRISTOPHER W. LOO E11718 ELECTRICAL STATE OF CALIFORNIA

SITE ADDRESS:
2001 STRAUCH DRIVE
ROSEVILLE, CA 95661
PLACER COUNTY
APN: 048-260-049

CITY OF ROSEVILLE
INFORMATION TECHNOLOGY
316 VERNON ST SUITE 300
ROSEVILLE, CA 95678

PROPOSED EQUIPMENT INSTALLATION
STRAUCH DRIVE

CITY OF ROSEVILLE CALIFORNIA

DRAWN: RZ | DATE: 07-06-22
FILE: SF22130.00
SHEET NO.

E-5

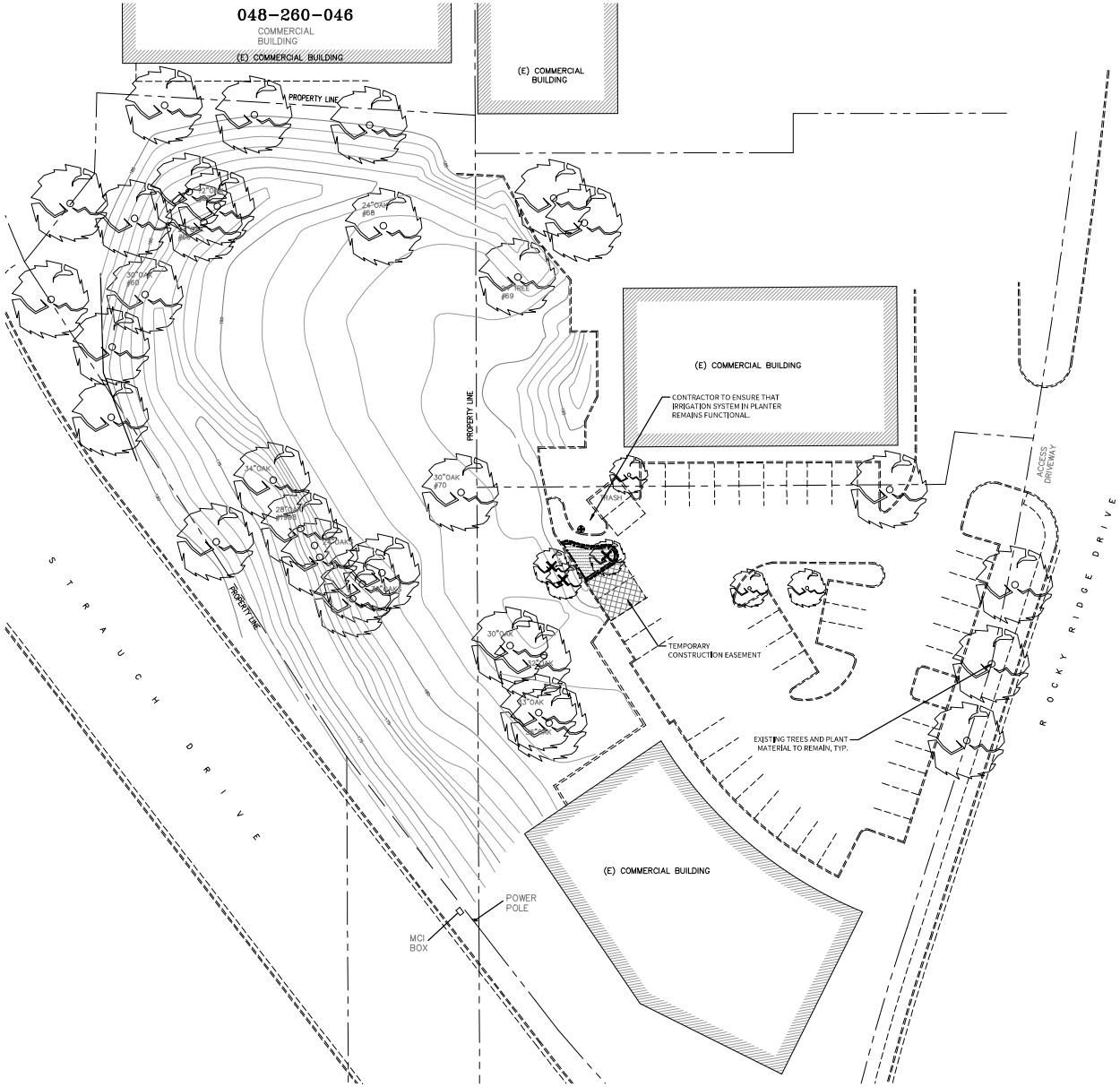

DEMOLITION LEGEND

SYMBOL	DESCRIPTION
×	ITEM PROPOSED FOR REMOVAL
	APPROXIMATE CANOPY OF EXISTING TREE. VERIFY IN FIELD.
	CONCRETE CURB TO BE REMOVED
	SHRUB & GROUNDCOVER TO BE REMOVED
⊕	LOCATE EXISTING IRRIGATION LATERAL LINE. CUT & CAP IN PLACE.

GENERAL NOTES

1. EXISTING TREES AND PLANT MATERIAL OUTSIDE OF SCOPE OF WORK TO REMAIN. PROTECT IN PLACE.
2. REPAIR AND REPLACE ANY EXISTING IRRIGATION SYSTEM OR PLANT MATERIAL DAMAGED DURING CONSTRUCTION.

SCALE: 1" = 20'-0"

0' 20' 80'
10' 40'

811 Know what's below. Call before you dig.

FUHRMAN LEAMY LAND GROUP
DESIGN • SERVICE • SOLUTIONS
2140 PROFESSIONAL DRIVE, SUITE 115
ROSEVILLE, CALIFORNIA 95661
916.783.5263 FLLANDGROUP.COM

JOB NO. : CRV. 22055

CONSULTANT

PROJECT:

PROPOSED EQUIPMENT INSTALLATION

2001 STRAUCH DRIVE
ROSVILLE, CA

CLIENT:
CITY OF ROSEVILLE

REVISIONS	DATE
△	
△	
△	
△	

ISSUE		DATE
1	1st SUBMITTAL	11.03.2022
2		
3		
4		
5		

REGISTERED LANDSCAPE ARCHITECT KEVIN C. LEAMY
PRELIMINARY NOT FOR CONSTRUCTION
DATE 11/1/22
LIC. NO. XXXXXX
STATE OF CALIFORNIA

DRAWN : ARM
CHECKED : KCL
SCALE: : 1"=20'-0"

SHEET TITLE:

LANDSCAPE DEMOLITION PLAN

SHEET
LD-1.0
1 OF 2 SHEETS

FUHRMAN LEAMY LAND GROUP RESERVES COMMON LAW COPYRIGHT AND OTHER PROPERTY RIGHTS IN THESE PLANS. THESE PLANS AND DRAWINGS ARE NOT TO BE REPRODUCED, CHANGED OR COPIED IN ANY FORM OR MANNER WHATSOEVER NOR ARE THEY TO BE ASSIGNED TO ANY THIRD PARTY WITHOUT FIRST OBTAINING THE EXPRESS WRITTEN PERMISSION OF FUHRMAN LEAMY LAND GROUP. ANY UNAUTHORIZED REUSE OF THESE PLANS WITHOUT WRITTEN CONSENT SHALL BE AT THE USER'S SOLE RISK AND WITHOUT LIABILITY TO FUHRMAN LEAMY LAND GROUP AND THE USER SHALL INDEMNIFY AND HOLD HARMLESS FUHRMAN LEAMY LAND GROUP FROM ANY AND ALL CLAIMS ARISING FROM SUCH UNAUTHORIZED REUSE.

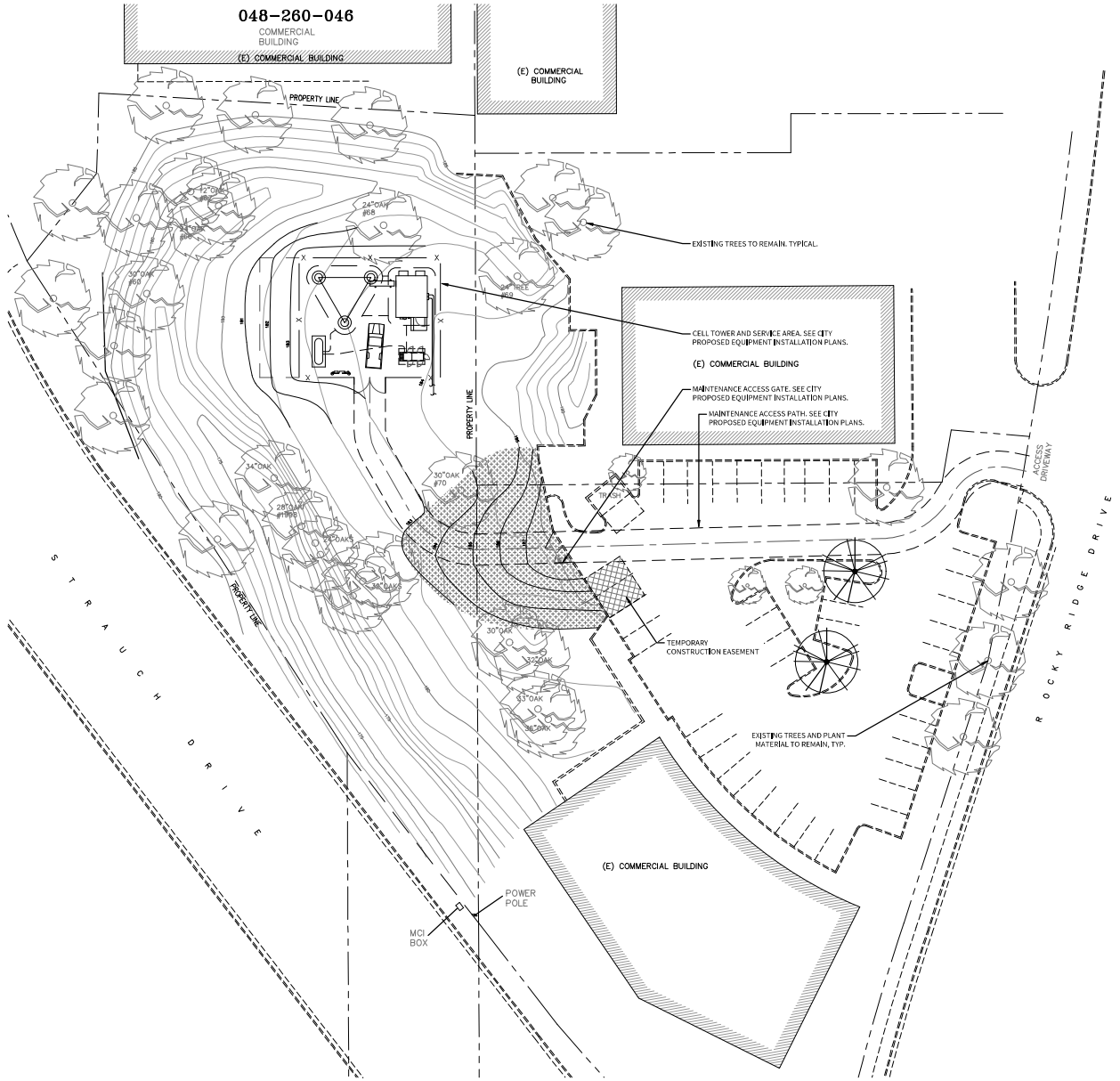

PLANT LIST & LEGEND				
TREES	BOTANICAL / COMMON NAME	SIZE	WATER USE	QTY
	PISTACIA CHINENSIS 'KEITH DAVEY' KEITH DAVEY CHINESE PISTACHE	15 GAL.	MODERATE	2
GROUND COVERS	BOTANICAL / COMMON NAME	SIZE	WATER USE	QTY
	HYDROSEEDED EROSION CONTROL BLEND BY PACIFIC COAST SEED (NATIVE EROSION CONTROL 45LBS./AC.)	HYDROSEED	NON IRRIGATED	3,297 SF

GENERAL NOTES

1. EXISTING TREES AND PLANT MATERIAL OUTSIDE OF SCOPE OF WORK TO REMAIN. PROTECT IN PLACE.
2. REPAIR AND REPLACE ANY EXISTING IRRIGATION SYSTEM OR PLANT MATERIAL DAMAGED DURING CONSTRUCTION.

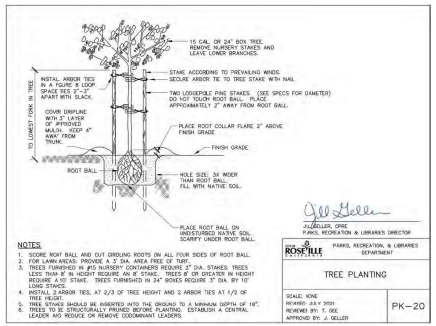

A TREE PLANTING
NOT TO SCALE
LA-20

SCALE: 1" = 20'-0"
0' 20' 80'
10' 40'

FUHRMAN LEAMY LAND GROUP
DESIGN • SERVICE • SOLUTIONS
2140 PROFESSIONAL DRIVE, SUITE 115
ROSEVILLE, CALIFORNIA 95661
916.783.5263 FLLANDGROUP.COM

JOB NO. : CRV. 22055

CONSULTANT

PROJECT:

PROPOSED EQUIPMENT INSTALLATION

2001 STRAUCH DRIVE
ROSVILLE, CA

CLIENT:
CITY OF ROSEVILLE

REVISIONS	DATE
1	
2	
3	
4	
5	

ISSUE		DATE
1	1st SUBMITTAL	11.03.2022
2		
3		
4		
5		

REGISTERED LANDSCAPE ARCHITECT
KEVIN C. MASON
No. 6351
EXP. 08/31/22
PRELIMINARY NOT FOR CONSTRUCTION
STATE OF CALIFORNIA

DRAWN : ARM
CHECKED : KCL
SCALE: : 1" = 20'-0"

SHEET TITLE:

LANDSCAPE PLANTING PLAN

SHEET
LP-1.0
2 OF 2 SHEETS

FUHRMAN LEAMY LAND GROUP RESERVES ITS COMMON LAW COPYRIGHT AND OTHER PROPERTY RIGHTS IN THESE PLANS. THESE PLANS AND DRAWINGS ARE NOT TO BE REPRODUCED, CHANGED OR COPIED IN ANY FORM OR MANNER WHATSOEVER NOR ARE THEY TO BE ASSIGNED TO ANY THIRD PARTY, WITHOUT FIRST OBTAINING THE EXPRESS WRITTEN PERMISSION AND CONSENT OF FUHRMAN LEAMY LAND GROUP. NOR ARE THEY TO BE USED BY ANY THIRD PARTY FOR ANY PROJECT OTHER THAN THE ONE FOR WHICH THEY HAVE BEEN PREPARED, WITHOUT FIRST OBTAINING THE EXPRESS WRITTEN PERMISSION AND CONSENT OF FUHRMAN LEAMY LAND GROUP.

valmont MICROFLECT

COMMUNICATIONS TOWER
FINAL
INSTALLATION DRAWINGS

MICROFLECT ORDER NO: 562784
TOWER MODEL: 72-S940-180
HEIGHT: 180 FT.
SITE: STRAUCH DRIVE, CA
CUSTOMER: CITY OF ROSEVILLE

VALMONT MICROFLECT CO., INC.
3575 25TH ST. SE. PO BOX 12985
SALEM. OR 97309-0985
PH: 503-363-9267 * FAX: 503-363-4613

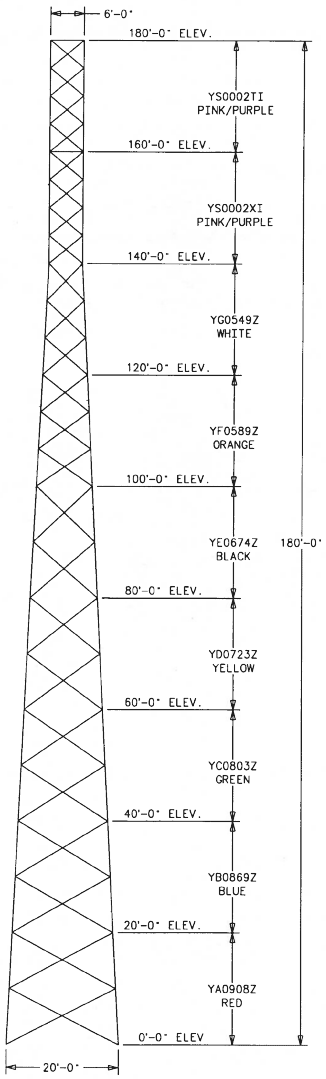

ELEVATION VIEW

NOTE: ALL ANTENNA TYPES AND MOUNTING ELEVATIONS ARE PER TABLE SHOWN AT RIGHT.

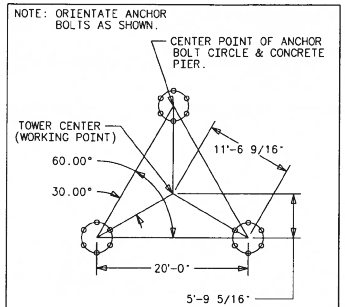

TOWER PLAN VIEW(AT BASE)

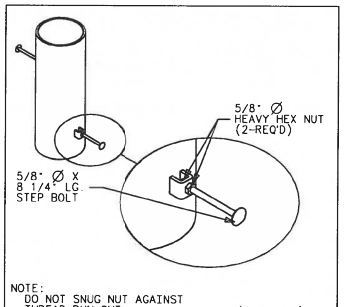

TYPICAL STEPBOLT INSTALLATION

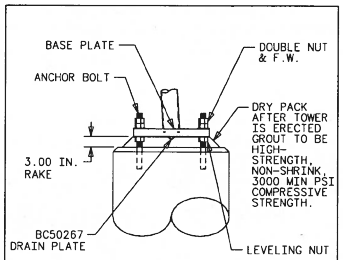

DRAIN PLATE INSTALLATION

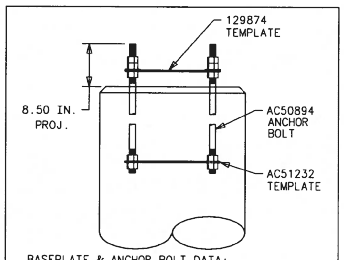

ANCHOR BOLT CAGE DETAIL

ANTENNA MOUNTING TABLE

ANTENNA TYPE & MODEL NO.	SIZE (DECIMAL FEET)	FREQUENCY	QTY.	*MOUNTING HEIGHT (DECIMAL FEET)	MOUNTING AZIMUTH
PARAFLECTOR (PR-850)	5.7 X 3.0	N/A	1	180'-0"	N/A
OMNI (PD620)	21	N/A	2	180'-0"	N/A
OMNI (SC479-HF2LDF)	13.5	N/A	2	180'-0"	N/A
SOLID DISH	2 DIA.	N/A	1	170'-0"	N/A
SOLID DISH	2 DIA.	N/A	1	175'-0"	N/A
OMNI (PD620)	21	N/A	2	140'-0"	N/A
OMNI (SC432D-HF6LDF)	14.6	N/A	2	150'-0"	N/A
OMNI (SC479-HF2LDF)	13.5	N/A	1	150'-0"	N/A
ANTENNA MOUNTING STAND-OFF	3	N/A	4	180'-0"	N/A
ANTENNA MOUNTING STAND-OFF	3	N/A	2	140'-0"	N/A
ANTENNA MOUNTING STAND-OFF	3	N/A	3	150'-0"	N/A

* = CENTERLINE OF ANTENNA , N/A = NOT AVAILABLE

NOTES:

1. MAXIMUM DESIGN REACTIONS AT BASE:
   SHEAR = 16.39 KIPS/LEG
   VERTICAL DOWNWARD = 165.24 KIPS/LEG
   VERTICAL UPWARD = 150.77 KIPS/LEG
2. TOWER DESIGN CRITERIA: ANSI/TIA-222-G & ANSI/TIA-222-H (ANSI/TIA-222-G CONTRALS DESIGN)
3. THIS STRUCTURE HAS BEEN DESIGNED FOR THE FOLLOWING LOADING:
   EXPOSURE CATEGORY = C
   STRUCTURE CLASSIFICATION/RISK CATEGORY = III
   TOPOGRAPHY CATEGORY = 1
   SEISMIC SITE CLASS = C, Ss = 0.432 & S1 = 0.218
   A. CASE 1 Vasd = 85 MPH ICE = 0.00 IN
      CASE 2 Vult = 100 MPH ICE = 0.00 IN
      CASE 3 WIND = 60 MPH ICE = 0.00 IN FOR TWIST & SWAY.
   B. ANTENNA LOADING IS PER THE ANTENNA MOUNTING TABLE SHOWN BELOW.
   C. WAVEGUIDE/COAX LOADING IS PER LAYOUT ON DRAWING D-123495.
4. MATERIAL: ALL STRUCTURAL SHAPES ASTM A36 UNLESS NOTED PIPE ASTM A53 GRADE B (46 KSI MINIMUM) FLANGES AND BASE PLATE ASTM A572 GR 50 OR EQUIV.
5. FINISH: GALVANIZED PER ASTM A-123
6. HARDWARE GALVANIZED PER ASTM A153.
7. COLOR CODE IDENTIFICATION:
   A. TOWER STEEL MEMBERS ARE COLOR-COATED NEAR THE STAMPED PART NO. TO MATCH THE CORRESPONDING SECTION. SEE SCHEMATIC AT LEFT TO DETERMINE COLOR SECTION
   B. HARDWARE KITS FOR EACH TOWER SECTION ARE PLACED IN BUCKETS & IDENTIFIED BY COLOR OF PAINT SHOWN ON LID OF BUCKET. SEE SCHEMATIC AT LEFT TO DETERMINE COLOR OF SECTION.
8. ALL ASTM A325 BOLTS ARE TO BE TIGHTENED TO A SNUG TIGHT CONDITION. "A SNUG TIGHT CONDITION IS DEFINED AS THE TIGHTNESS THAT EXISTS WHEN ALL PLIES IN A JOINT ARE IN CONTACT. THIS MAY BE ATTAINED BY A FEW IMPACTS OF AN IMPACT WRENCH OR THE FULL EFFORT OF A MAN USING AN ORDINARY SPUD WRENCH."
   REF: "SPECIFICATIONS FOR ASTM A325 OR A490 BOLTS," MANUAL OF STEEL CONSTRUCTION, ALLOWABLE STRESS DESIGN, AISC, 9TH EDITION, 1989, PAGE 5-273.
9. SITE NAME = STRAUCH DRIVE, CA

PROJECT DRAWING INDEX

DRAWING NUMBER	DESCRIPTION	UNIT WT (LBS)	QTY PER STR
YA0908Z	SECTION-A 0'- 20' -- RED	3324	1
YB0869Z	SECTION-B 20'- 40' -- BLUE	2355	1
YC0803Z	SECTION-C 40'- 60' -- GREEN	2202	1
YD0723Z	SECTION-D 60'- 80' -- YELLOW	2100	1
YE0674Z	SECTION-E 80'-100' -- BLACK	1740	1
YF0589Z	SECTION-F 100'-120' -- ORANGE	1278	1
YG0549Z	SECTION-G 120'-140' -- WHITE	1071	1
YS002WI	SECTION-S 140'-160' -- PINK/PURPLE	918	1
YS002TI	SECTION-S 160'-180' -- PINK/PURPLE	924	1
BC5333Z	SAFETY CLIMB CABLE SYSTEM	79	1
CC5049Z	LIGHTNING ROD MOUNTING ASSEMBLY	10	1
D-103934	CLIMBING LADDER INSTALLATION DRAWING	1385	1
D-123495	24-HOLE WAVEGUIDE LADDER INSTALLATION	1080	1
B-152715	DRILLED PIER FOUNDATION LAYOUT	---	1
C-144376	ANCHOR BOLT PLACEMENT TEMPLATE ASSEMBLY	---	1

REGISTERED PROFESSIONAL ENGINEER
JEFFREY E. GRASSMAN
C 63982
EXP.
CIVIL
STATE OF CALIFORNIA

DUPLICATE DRAWING DISTRIBUTION

TEC PROJECT DRAWING INDEX 562784

DWG SIZE D CLASS CODE (1) 4 CLASS NO. (3) 999

REV ID	DATE	REV BY	CHK BY	REVISION DESCRIPTION
A	05/08/23	PDC	MR	ADDED MAT'L GRADES

DRAWN EGS | ENGR | DATE 02/02/23 | SCALE NONE
P.A. CHK | SHOP CHK PDC
OTHER SPECIFICATIONS
MATERIAL | THICKNESS | WEIGHT 18,466#

VALMONT MICROFLECT

ORDER NO. 562784 | CUSTOMER CITY OF ROSEVILLE | DESCRIPTION 180 FT. SELF SUPPORTING STRUCTURE | DWG NO. DC54080

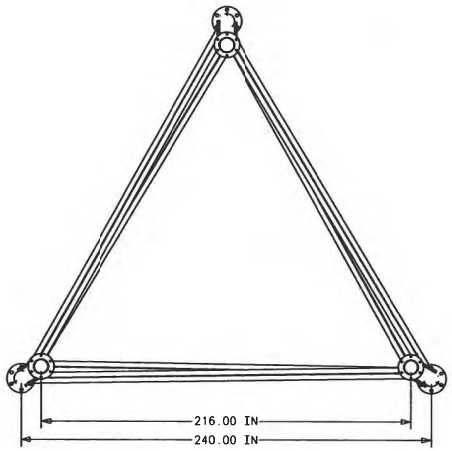

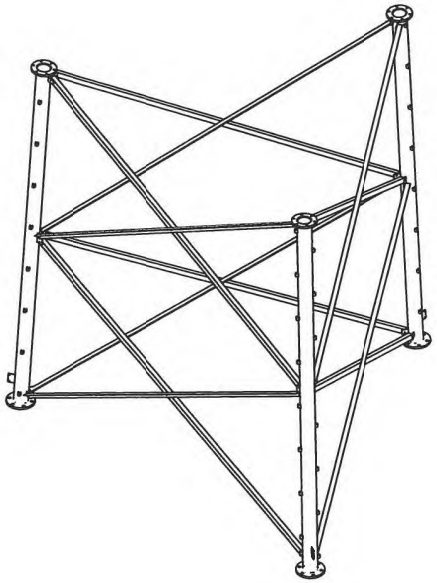

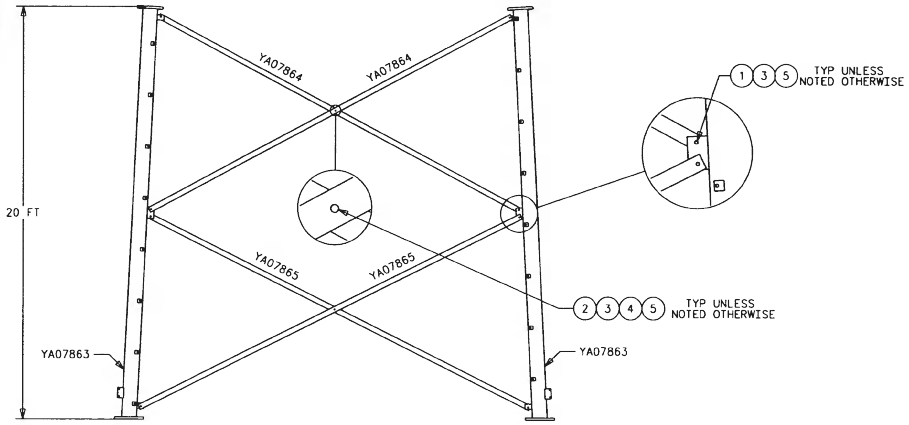

NOTES:
1. HARDWARE QUANTITIES INCLUDE 5% EXTRA.

BILL OF MATERIAL
(SHIPPING SEQ.=1 FOR ALL)

VALMONT PART NO.	DESCRIPTION	UNIT WT (LBS)	QTY PER STR
YA07864	∠ 3 X 3 X 1/4 X 19'-11 9/16"	101	6
YA07865	∠ 3 X 3 X 1/4 X 20'-9 1/8"	105	6
YA07863	PIPE 8 5/8" OD X .322" WALL WELDMENT	696	3

MISCELLANEOUS

YA07869	SECTION A HARDWARE KIT	----	1

ITEM NO.	VALMONT PART NUMBER	DESCRIPTION							* QTY PER STR
		HARDWARE SIZE (IN)							
		BOLT		NUT	WSHR	GENERAL	FINISH	ASTM SPEC	
		DIA	LONG						
1		5/8	2			D	GALV	A325	26
2		5/8	2 1/4			D	GALV	A325	7
3				5/8		HVY HEX	GALV	A563	33
4					5/8	3/8 THK	GALV	----	7
5					5/8	LOCK	GALV	----	33

REGISTERED PROFESSIONAL ENGINEER
JEFFREY E. GRASSMAN
C 63982
EXP.
CIVIL
STATE OF CALIFORNIA

DUPLICATE DRAWING DISTRIBUTION

TEC SECTION A COLOR CODE = RED

DWG SIZE D CLASS CODE (1) 1 CLASS NO. (3) 450

DRAWN	ENGR	DATE	SCALE
RJS		01/05/10	NONE

P.A. CHK | SHOP CHK

OTHER SPECIFICATIONS

MATERIAL	THICKNESS	WEIGHT
		3324

REV ID	DATE	REV BY	CHK BY	REVISION DESCRIPTION

ORDER NO.	CUSTOMER	DESCRIPTION	DWG NO
13075-09	MOTOROLA	SECTION A COLOR CODE = RED	YA09087

VALMONT MICROFLECT

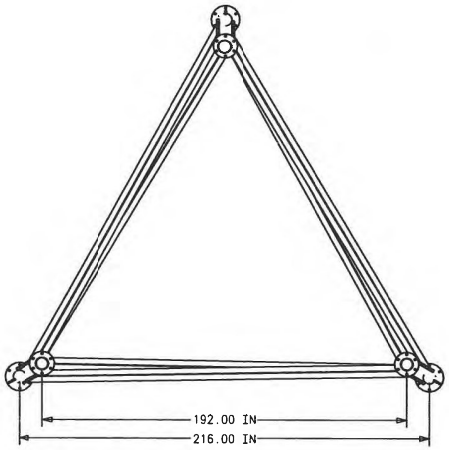

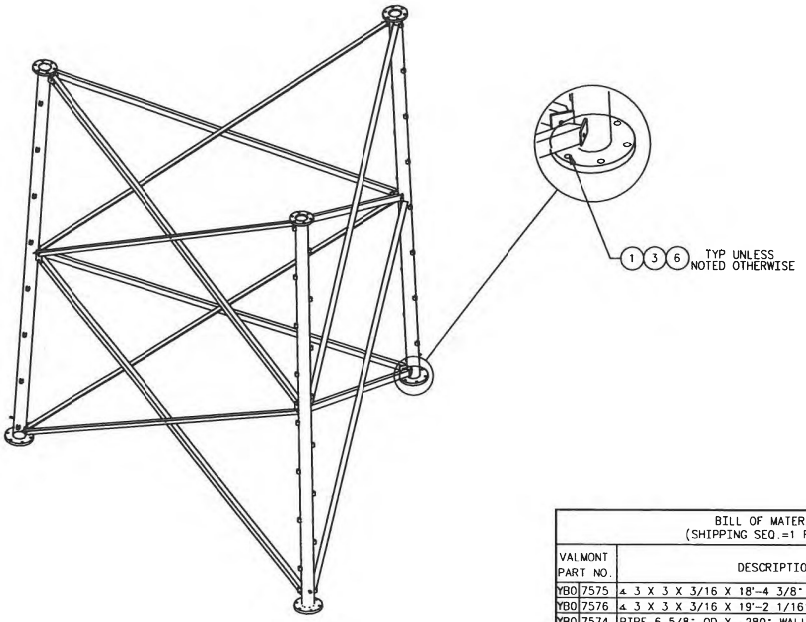

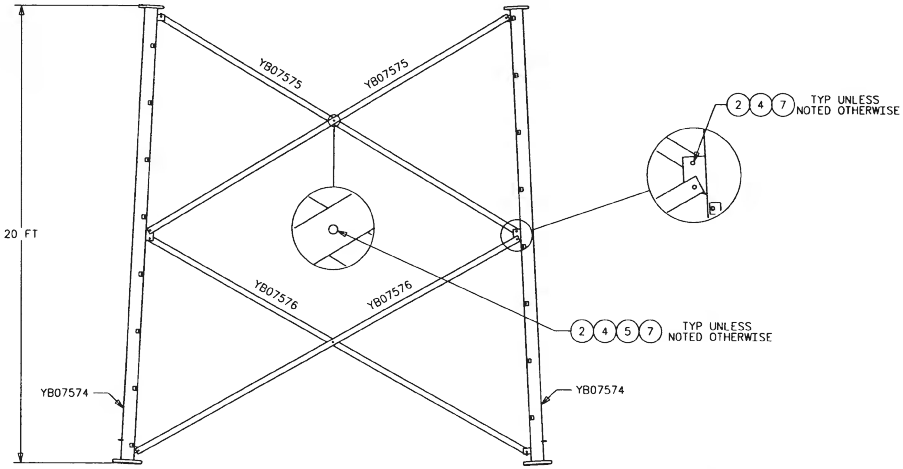

BILL OF MATERIAL
(SHIPPING SEQ.=1 FOR ALL)

VALMONT PART NO.	DESCRIPTION	UNIT WT (LBS)	QTY PER STR
YB0 7575	∠ 3 X 3 X 3/16 X 18'-4 3/8"	71	6
YB0 7576	∠ 3 X 3 X 3/16 X 19'-2 1/16"	74	6
YB0 7574	PIPE 6 5/8" OD X .280" WALL WELDMENT	495	3

MISCELLANEOUS

YB0 7580	SECTION B HARDWARE KIT	----	1

ITEM NO.	VALMONT PART NUMBER	DESCRIPTION							QTY PER STR
		HARDWARE SIZE (IN)							
		BOLT		NUT	WSHR	GENERAL	FINISH	ASTM SPEC	
		DIA	LONG						
1		1	4 3/4			D	GALV	A325	19
2		5/8	2			D	GALV	A325	32
3				1		HVY HEX	GALV	A563	19
4				5/8		HVY HEX	GALV	A563	32
5					5/8	3/8 THK	GALV	----	7
6					1	LOCK	GALV	----	19
7					5/8	LOCK	GALV	----	32

REGISTERED PROFESSIONAL ENGINEER
JEFFREY E. GRASSMAN
C 63982
EXP.
CIVIL
STATE OF CALIFORNIA

NOTES:
1. HARDWARE QUANTITIES INCLUDE 5% EXTRA.
2. BOTTOM FLANGE CONNECTION WILL USE 1" DIA X 4 3/4"LG A325 BOLTS.

DUPLICATE DRAWING DISTRIBUTION

TEC SECTION B COLOR CODE = BLUE

DWG SIZE D CLASS CODE (1) 1 CLASS NO. (3) 450

REV ID	DATE	REV BY	CHK BY	REVISION DESCRIPTION

DRAWN RJS | ENGR | DATE 01/05/10 | SCALE NONE
P.A. CHK | SHOP CHK
OTHER SPECIFICATIONS
MATERIAL | THICKNESS | WEIGHT 2355

ORDER NO. 13075-09
CUSTOMER MOTOROLA
DESCRIPTION SECTION B COLOR CODE = BLUE
DWG NO. YB0869Z

VALMONT MICROFLECT

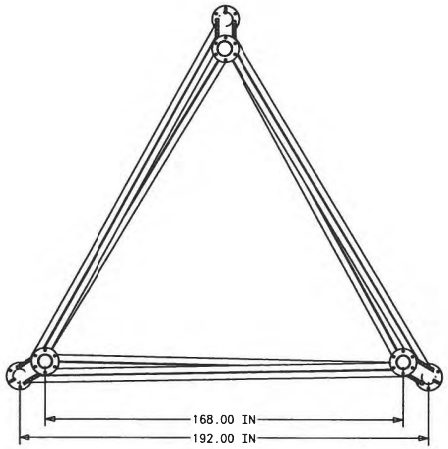

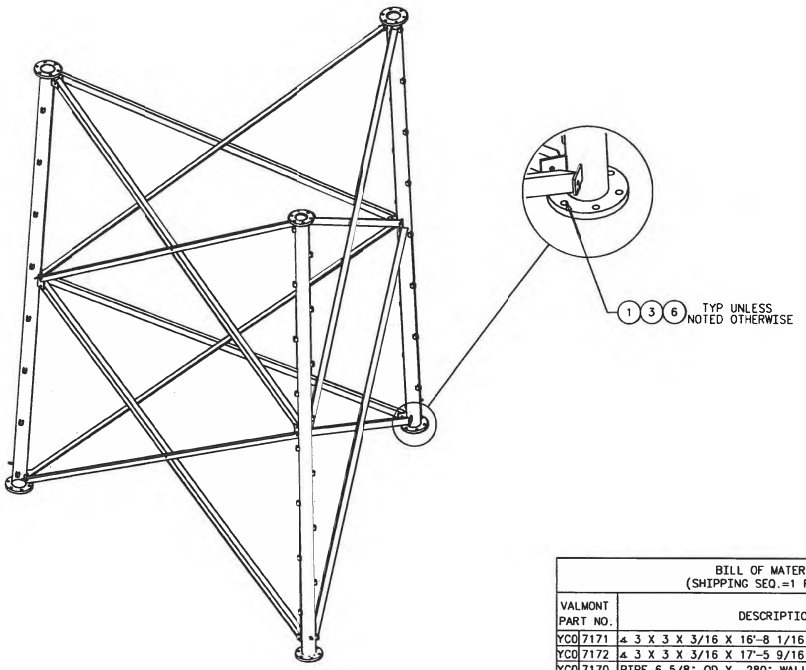

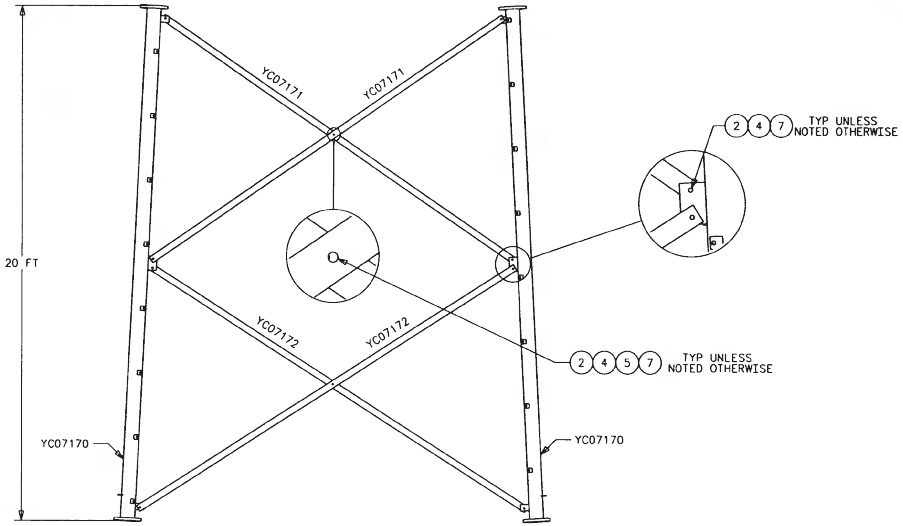

BILL OF MATERIAL
(SHIPPING SEQ.=1 FOR ALL)

VALMONT PART NO.	DESCRIPTION	UNIT WT (LBS)	QTY PER STR
YC07171	4 3 X 3 X 3/16 X 16'-8 1/16"	65	6
YC07172	4 3 X 3 X 3/16 X 17'-5 9/16"	68	6
YC07170	PIPE 6 5/8" OD X .280" WALL WELDMENT	468	3
	MISCELLANEOUS		
YC07176	SECTION C HARDWARE KIT	----	1

ITEM NO.	VALMONT PART NUMBER	DESCRIPTION							* QTY PER STR
		HARDWARE SIZE (IN)							
		BOLT		NUT	WSHR	GENERAL	FINISH	ASTM SPEC	
		DIA	LONG						
1		1	4 1/2			D	GALV	A325	19
2		5/8	2			D	GALV	A325	32
3				1		HVY HEX	GALV	A563	19
4				5/8		HVY HEX	GALV	A563	32
5					5/8	3/8 THK	GALV	----	7
6					1	LOCK	GALV	----	19
7					5/8	LOCK	GALV	----	32

REGISTERED PROFESSIONAL ENGINEER
JEFFREY E. GRASSMAN
C 63982
EXP. ____
CIVIL
STATE OF CALIFORNIA

NOTES:
1. HARDWARE QUANTITIES INCLUDE 5% EXTRA.
2. BOTTOM FLANGE CONNECTION WILL USE 1" DIA X 4 1/2"LG A325 BOLTS.

DUPLICATE DRAWING DISTRIBUTION

TEC SECTION C COLOR CODE = GREEN

DWG SIZE D CLASS CODE (1) 1 CLASS NO. (3) 450

DRAWN	ENGR	DATE	SCALE
RJS		01/05/10	NONE

P.A. CHK | SHOP CHK

OTHER SPECIFICATIONS

MATERIAL	THICKNESS	WEIGHT
		2202#

REV ID	DATE	REV BY	CHK BY	REVISION DESCRIPTION

ORDER NO. 13075-09 | CUSTOMER MOTOROLA | DESCRIPTION SECTION C COLOR CODE = GREEN | DWG NO. YC0803Z

VALMONT MICROFLECT

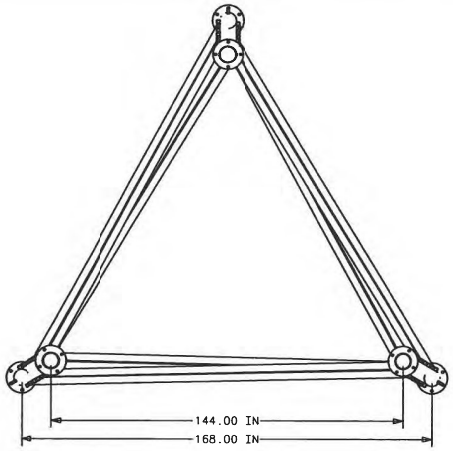

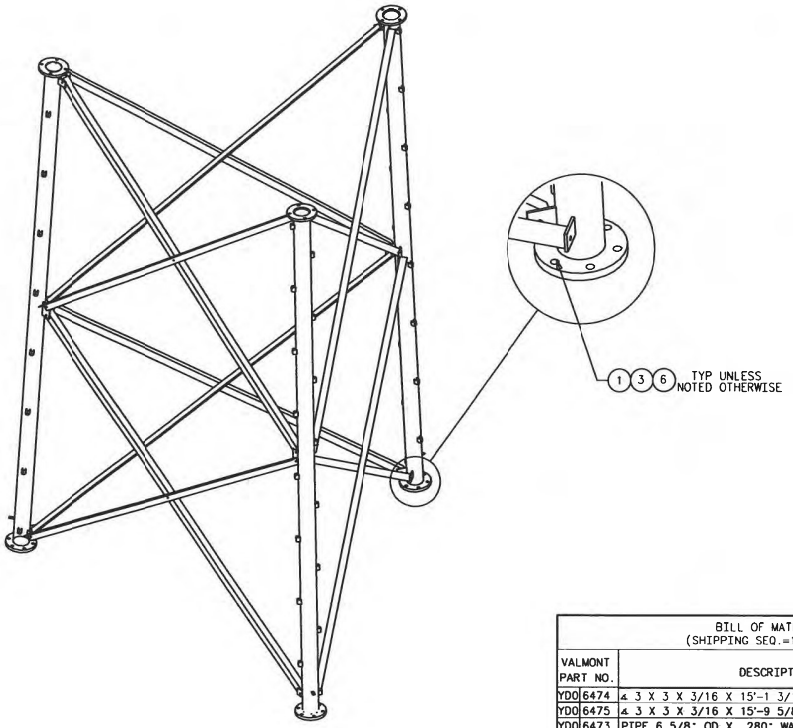

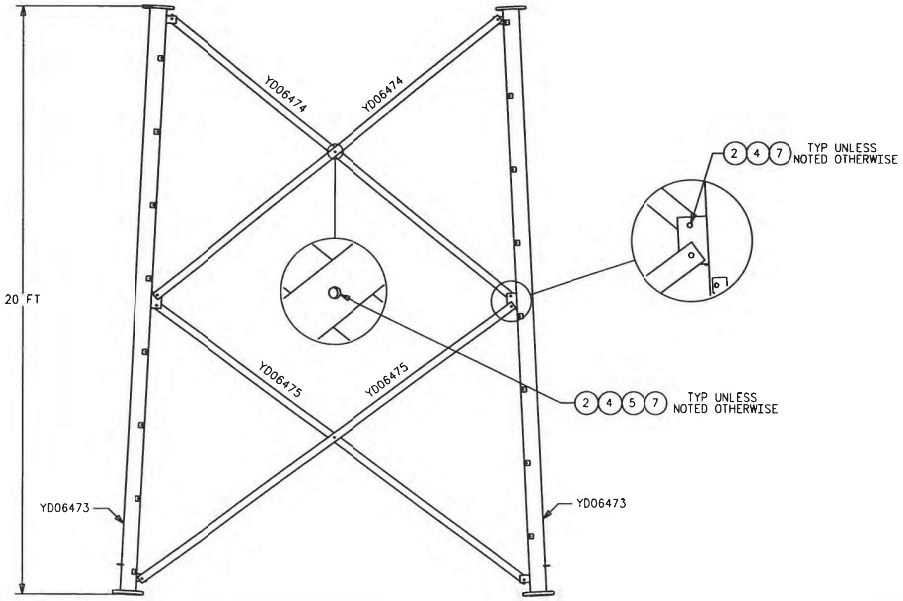

BILL OF MATERIAL
(SHIPPING SEQ.=1 FOR ALL)

VALMONT PART NO.	DESCRIPTION	UNIT WT (LBS)	QTY PER STR
YD0 6474	∠ 3 X 3 X 3/16 X 15'-1 3/16"	59	6
YD0 6475	∠ 3 X 3 X 3/16 X 15'-9 5/8"	61	6
YD0 6473	PIPE 6 5/8" OD X .280" WALL WELDMENT	460	3

MISCELLANEOUS

YD0 6479	SECTION D HARDWARE KIT	——	1

ITEM NO.	VALMONT PART NUMBER	DESCRIPTION							* QTY PER STR
		HARDWARE SIZE (IN)							
		BOLT		NUT	WSHR	GENERAL	FINISH	ASTM SPEC	
		DIA	LONG						
1		1	4 1/2			D	GALV	A325	19
2		5/8	2			D	GALV	A325	32
3				1		HVY HEX	GALV	A563	19
4				5/8		HVY HEX	GALV	A563	32
5					5/8	3/8 THK	GALV	——	7
6					1	LOCK	GALV	——	19
7					5/8	LOCK	GALV	——	32

REGISTERED PROFESSIONAL ENGINEER
JEFFREY E. GRASSMAN
C 63982
EXP.
CIVIL
STATE OF CALIFORNIA

NOTES:
1. HARDWARE QUANTITIES INCLUDE 5% EXTRA.
2. BOTTOM FLANGE CONNECTION WILL USE 1" DIA X 4 1/2"LG A325 BOLTS.

DUPLICATE DRAWING DISTRIBUTION

TEC SECTION D COLOR CODE = YELLOW

DWG SIZE D CLASS CODE (1) 1 CLASS NO. (3) 450

REV ID	DATE	REV BY	CHK BY	REVISION DESCRIPTION

DRAWN RJS | ENGR | DATE 01/05/10 | SCALE NONE
P.A. CHK | SHOP CHK
OTHER SPECIFICATIONS
MATERIAL | THICKNESS | WEIGHT 2100#

ORDER NO. 13075-09
CUSTOMER MOTOROLA
DESCRIPTION SECTION D COLOR CODE = YELLOW
DWG NO. YD07232

VALMONT MICROFLECT

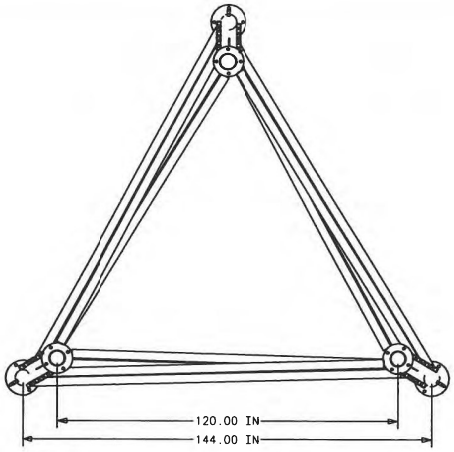

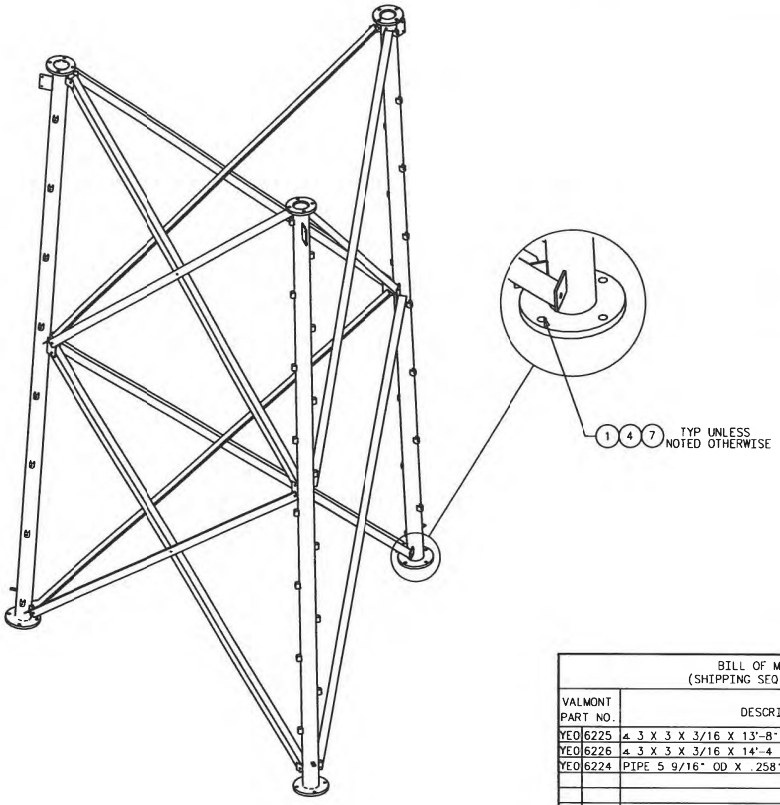

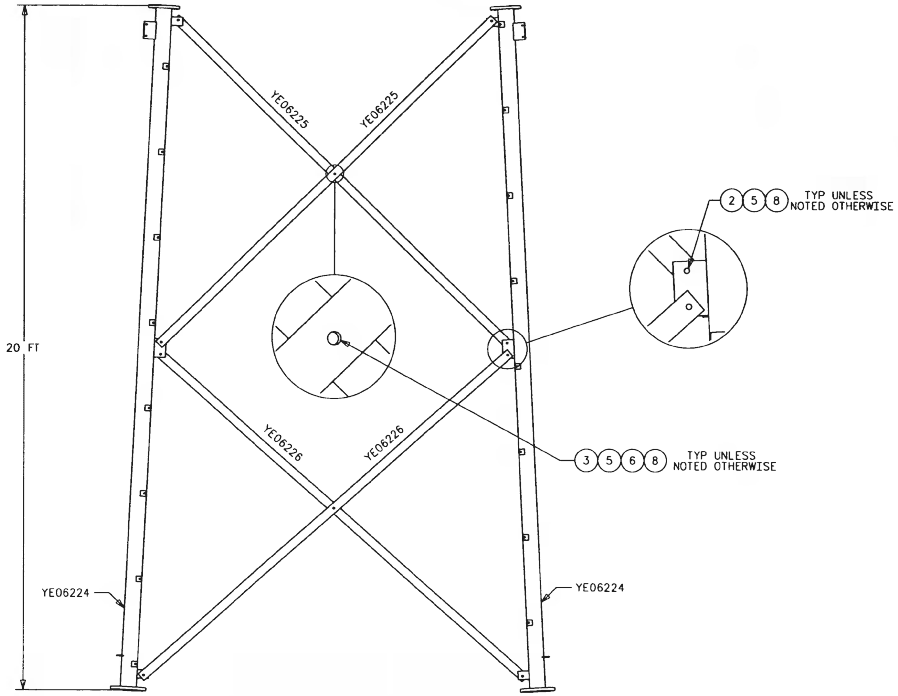

BILL OF MATERIAL
(SHIPPING SEQ.=1 FOR ALL)

VALMONT PART NO.	DESCRIPTION	UNIT WT (LBS)	QTY PER STR
YE0 6225	∠ 3 X 3 X 3/16 X 13'-8"	53	6
YE0 6226	∠ 3 X 3 X 3/16 X 14'-4 1/2"	56	6
YE0 6224	PIPE 5 9/16" OD X .258" WALL WELDMENT	362	3

MISCELLANEOUS

YE0 6230	SECTION E HARDWARE KIT	----	1

ITEM NO.	VALMONT PART NUMBER	DESCRIPTION					FINISH	ASTM SPEC	QTY PER STR
		HARDWARE SIZE (IN)							
		BOLT		NUT	WSHR	GENERAL			
		DIA	LONG						
1		7/8	3 1/2				GALV	A325	13
2		5/8	1 3/4			D	GALV	A325	26
3		5/8	2			D	GALV	A325	7
4				7/8		HVY HEX	GALV	A563	13
5				5/8		HVY HEX	GALV	A563	33
6					5/8	1/4 THK	GALV	-----	7
7					7/8	LOCK	GALV	-----	13
8					5/8	LOCK	GALV	-----	33

REGISTERED PROFESSIONAL ENGINEER
JEFFREY E. GRASSMAN
C 63982
EXP.
CIVIL
STATE OF CALIFORNIA

NOTES:
1. HARDWARE QUANTITIES INCLUDE 5% EXTRA.
2. BOTTOM FLANGE CONNECTION WILL USE 7/8" DIA X 3 1/2"LG A325 BOLTS.

DUPLICATE DRAWING DISTRIBUTION

TEC SECTION E COLOR CODE = BLACK

DWG SIZE D CLASS CODE (1) 1 CLASS NO. (3) 450

DRAWN	ENGR	DATE	SCALE
RJS		01/05/10	NONE

P. A. CHK SHOP CHK

OTHER SPECIFICATIONS

REV ID	DATE	REV BY	CHK BY	REVISION DESCRIPTION

MATERIAL THICKNESS WEIGHT T/40

ORDER NO. 13075-09 CUSTOMER MOTOROLA DESCRIPTION SECTION E COLOR CODE = BLACK DWG NO YE0674Z

VALMONT MICROFLECT

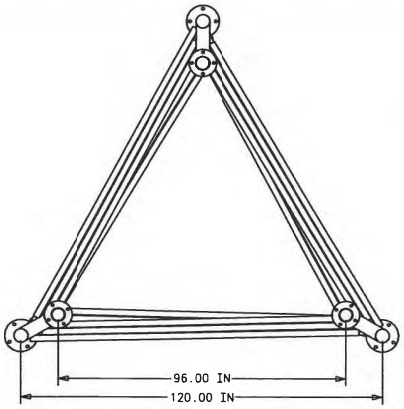

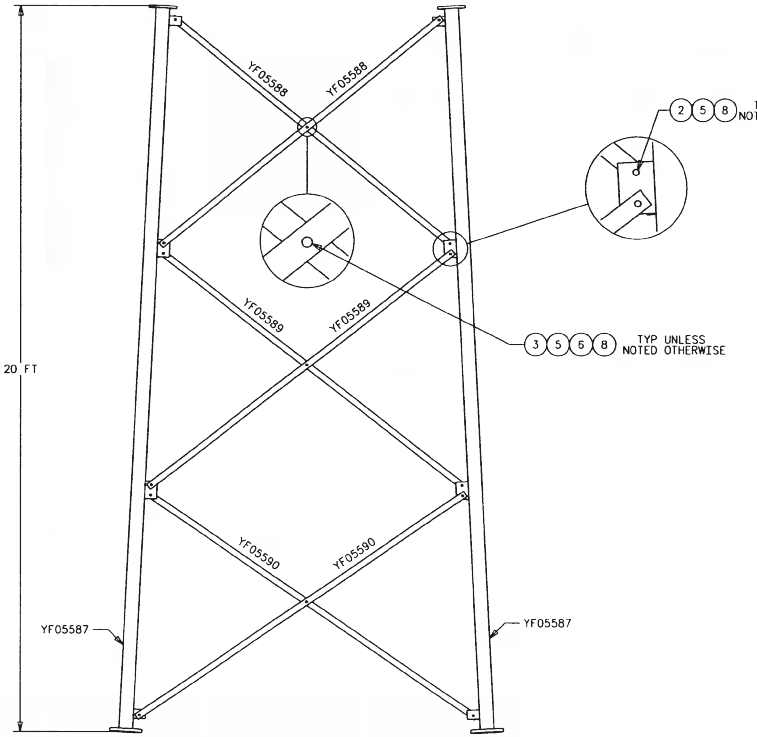

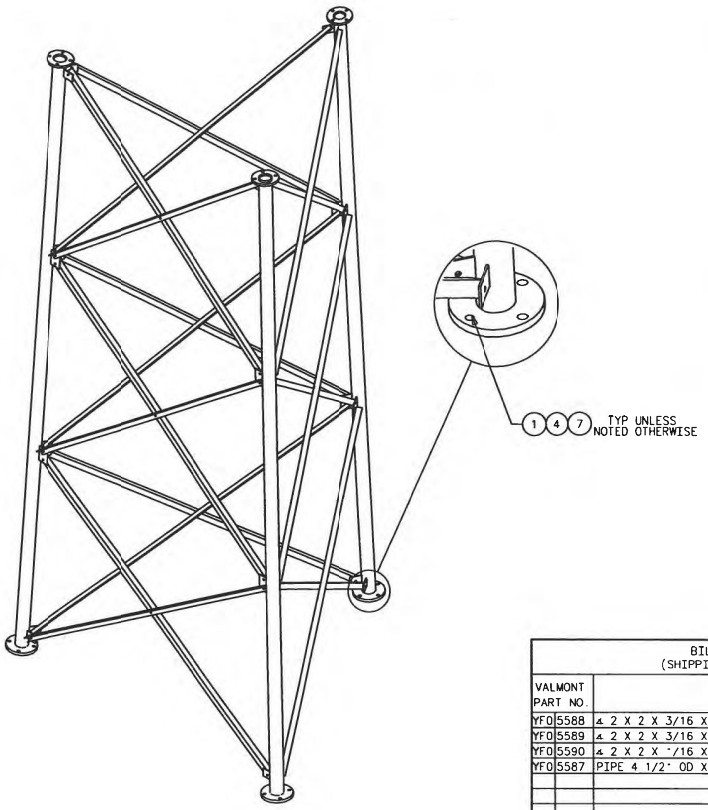

BILL OF MATERIAL
(SHIPPING SEQ.=1 FOR ALL)

VALMONT PART NO.	DESCRIPTION	UNIT WT (LBS)	QTY PER STR
YF05588	∠ 2 X 2 X 3/16 X 9'-11 7/8"	26	6
YF05589	∠ 2 X 2 X 3/16 X 10'-7 13/16"	27	6
YF05590	∠ 2 X 2 X 3/16 X 10'-11 15/16"	28	6
YF05587	PIPE 4 1/2" OD X .237" WALL WELDMENT	264	3

MISCELLANEOUS

YF05595	SECTION F HARDWARE KIT	1

ITEM NO.	VALMONT PART NUMBER	DESCRIPTION: HARDWARE SIZE (IN) BOLT DIA	BOLT LONG	NUT	WSHR	GENERAL	FINISH	ASTM SPEC	QTY PER STR
1		7/8	3 1/2				GALV	A325	13
2		5/8	1 3/4			D	GALV	A325	38
3		5/8	2			D	GALV	A325	10
4				7/8		HVY HEX	GALV	A563	13
5				5/8		HVY HEX	GALV	A563	48
6					5/8	1/4 THK	GALV	-----	10
7					7/8	LOCK	GALV	-----	13
8					5/8	LOCK	GALV	-----	48

REGISTERED PROFESSIONAL ENGINEER
JEFFREY E. GRASSMAN
C 63982
EXP.
CIVIL
STATE OF CALIFORNIA

NOTES:
1. HARDWARE QUANTITIES INCLUDE 5% EXTRA.
2. BOTTOM FLANGE CONNECTION WILL USE 7/8" DIA X 3 1/2"LG A325 BOLTS.

DUPLICATE DRAWING DISTRIBUTION

TEC SECTION F COLOR CODE = ORANGE

DWG SIZE D CLASS CODE (1) 1 CLASS NO. (3) 450

DRAWN RJS | ENGR | DATE 01/05/10 | SCALE NONE

P.A. CHK | SHOP CHK

OTHER SPECIFICATIONS

MATERIAL | THICKNESS | WEIGHT 1278#

REV ID	DATE	REV BY	CHK BY	REVISION DESCRIPTION

ORDER NO. 13075-09 | CUSTOMER MOTOROLA | DESCRIPTION SECTION F COLOR CODE = ORANGE | DWG NO. YF05897

VALMONT MICROFLECT

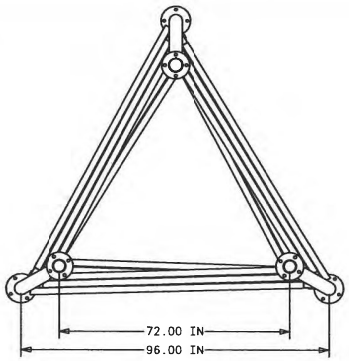

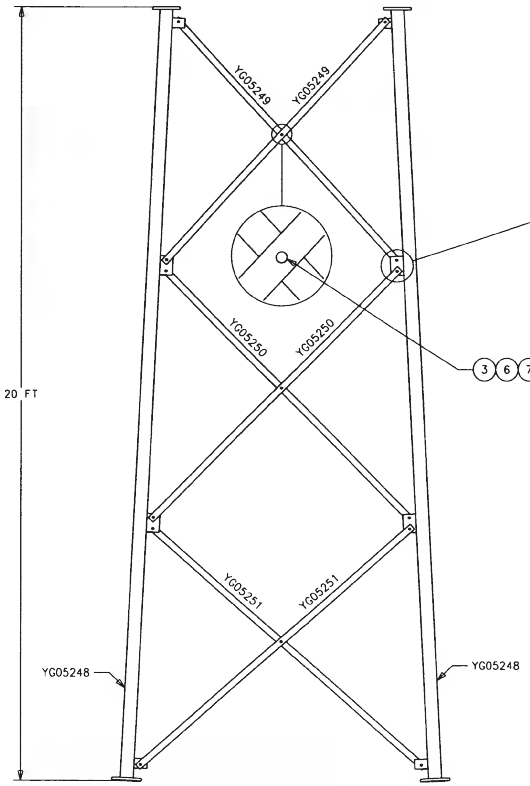

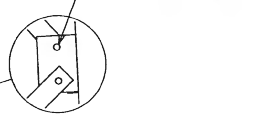

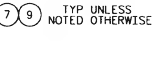

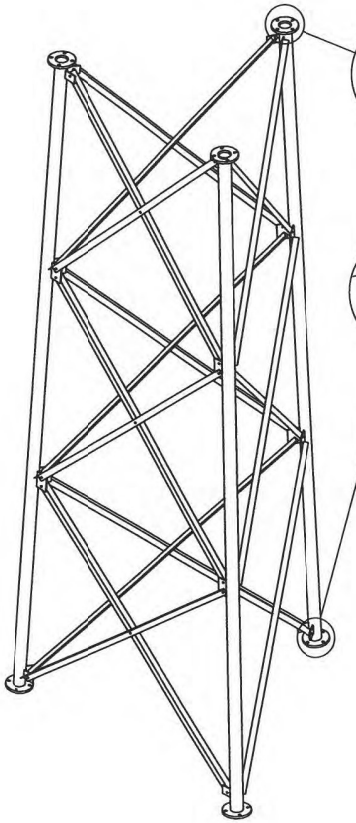

BILL OF MATERIAL
(SHIPPING SEQ.=1 FOR ALL)

VALMONT PART NO.	DESCRIPTION	UNIT WT (LBS)	QTY PER STR
YG05249	∠ 2 X 2 X 3/16 X 8'-6 11/16"	22	6
YG05250	∠ 2 X 2 X 3/16 X 9'-2 1/8"	24	6
YG05251	∠ 2 X 2 X 3/16 X 9'-5 5/8"	24	6
YG05248	PIPE 4" OD X .226" WALL WELDMENT	217	3

MISCELLANEOUS

YG05256	SECTION G HARDWARE KIT	----	1

ITEM NO.	VALMONT PART NUMBER	DESCRIPTION							* QTY PER STR
		HARDWARE SIZE (IN)							
		BOLT		NUT	WSHR	GENERAL	FINISH	ASTM SPEC	
		DIA	LONG						
1		3/4	3			D	GALV	A325	13
2		5/8	1 3/4			D	GALV	A325	38
3		5/8	2			D	GALV	A325	10
4		5/8	3			D	GALV	A325	13
5				3/4		HVY HEX	GALV	A563	13
6				5/8		HVY HEX	GALV	A563	61
7					5/8	1/4 THK	GALV	----	10
8					3/4	LOCK	GALV	----	13
9					5/8	LOCK	GALV	----	61

REGISTERED PROFESSIONAL ENGINEER
JEFFREY E. GRASSMAN
C 63982
EXP.
CIVIL
STATE OF CALIFORNIA

NOTES:
1. HARDWARE QUANTITIES INCLUDE 5% EXTRA.
2. BOTTOM FLANGE CONNECTION WILL USE 3/4" DIA X 3" LG A325 BOLTS.
3. TOP FLANGE CONNECTION WILL USE 5/8" DIA X 3" LG A325 BOLTS.

DUPLICATE DRAWING DISTRIBUTION

TEC SECTION G COLOR CODE = WHITE

DWG SIZE D CLASS CODE (1) 1 CLASS NO. (3) 450

REV ID	DATE	REV BY	CHK BY	REVISION DESCRIPTION

DRAWN RJS | ENGR | DATE 01/05/10 | SCALE NONE
P.A. CHK | SHOP CHK
OTHER SPECIFICATIONS
MATERIAL | THICKNESS | WEIGHT T071

ORDER NO. 13075-09
CUSTOMER MOTOROLA
DESCRIPTION SECTION G COLOR CODE = WHITE
DWG NO YG0549Z

VALMONT MICROFLECT

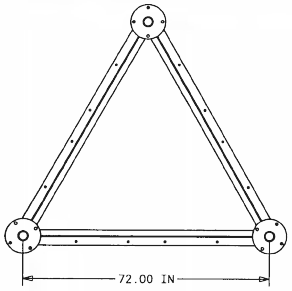

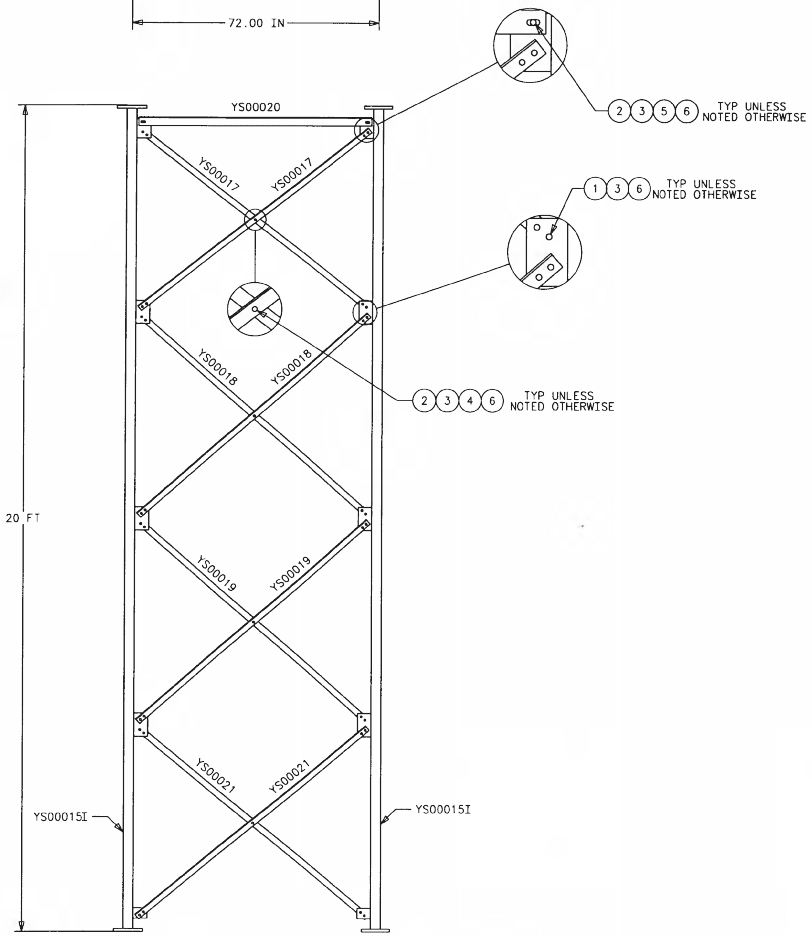

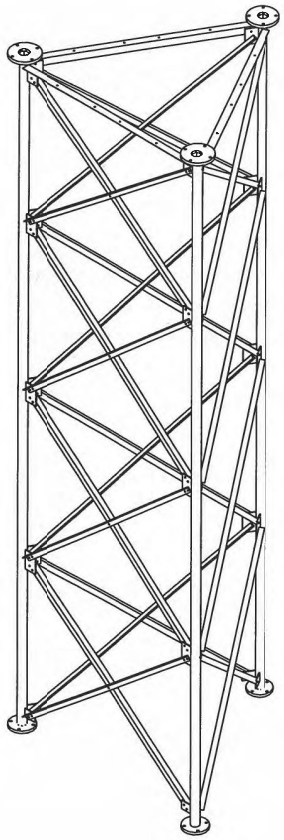

BILL OF MATERIAL
(SHIPPING SEQ.=1 FOR ALL)

VALMONT PART NO.	DESCRIPTION	UNIT WT (LBS)	QTY PER STR
YS0 0017	∠ 1 3/4 X 1 3/4 X 3/16 X 7'-0 7/8"	16	6
YS0 0018	∠ 1 3/4 X 1 3/4 X 3/16 X 7'-4 3/4"	17	6
YS0 0019	∠ 1 3/4 X 1 3/4 X 3/16 X 7'-4 3/4"	17	6
YS0 0020	∠ 2 1/2 X 2 1/2 X 3/16 X 5'-8 1/8"	19	3
YS0 0021	∠ 1 3/4 X 1 3/4 X 3/16 X 7'-2 9/16	16	6
YS0 0015I	PIPE 2 7/8" OD X .203" WALL WELDMENT	157	3

MISCELLANEOUS

YS0 0027	SECTION S HARDWARE KIT	———	1

ITEM NO.	VALMONT PART NUMBER	DESCRIPTION: HARDWARE SIZE (IN) BOLT DIA	BOLT LONG	NUT	WSHR	GENERAL	FINISH	ASTM SPEC	* QTY PER STR
1		1/2	1 1/4			D	GALV	A325	101
2		1/2	1 1/2			D	GALV	A325	19
3				1/2		HVY HEX	GALV	A563	120
4					1/2	1/4 THK	GALV	———	13
5					1/2	FLAT	GALV	F436	7
6					1/2	LOCK	GALV	———	120
7									

HARDWARE PER ASTM A325-91C, EXCLUDE SECTIONS 6.3 & 9.2

REGISTERED PROFESSIONAL ENGINEER
JEFFREY E. GRASSMAN
C 63982
EXP.
CIVIL
STATE OF CALIFORNIA

NOTES:
1. HARDWARE QUANTITIES INCLUDE 5% EXTRA.

DUPLICATE DRAWING DISTRIBUTION

TEC SECTION S COLOR CODE = PINK/PURPLE

DWG SIZE D CLASS CODE (1) 1 CLASS NO. (3) 450

REV ID	DATE	REV BY	CHK BY	REVISION DESCRIPTION

DRAWN RJS | ENGR | DATE 01/11/10 | SCALE NONE
P.A. CHK | SHOP CHK | PDC
OTHER SPECIFICATIONS
MATERIAL | THICKNESS | WEIGHT 918#

ORDER NO. | CUSTOMER 72-MODULAR | DESCRIPTION SECT. S COLOR CODE = PINK/PURPLE | DWG NO. YS0002WI

VALMONT MICROFLECT

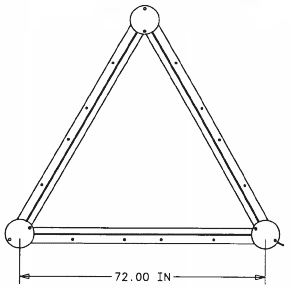

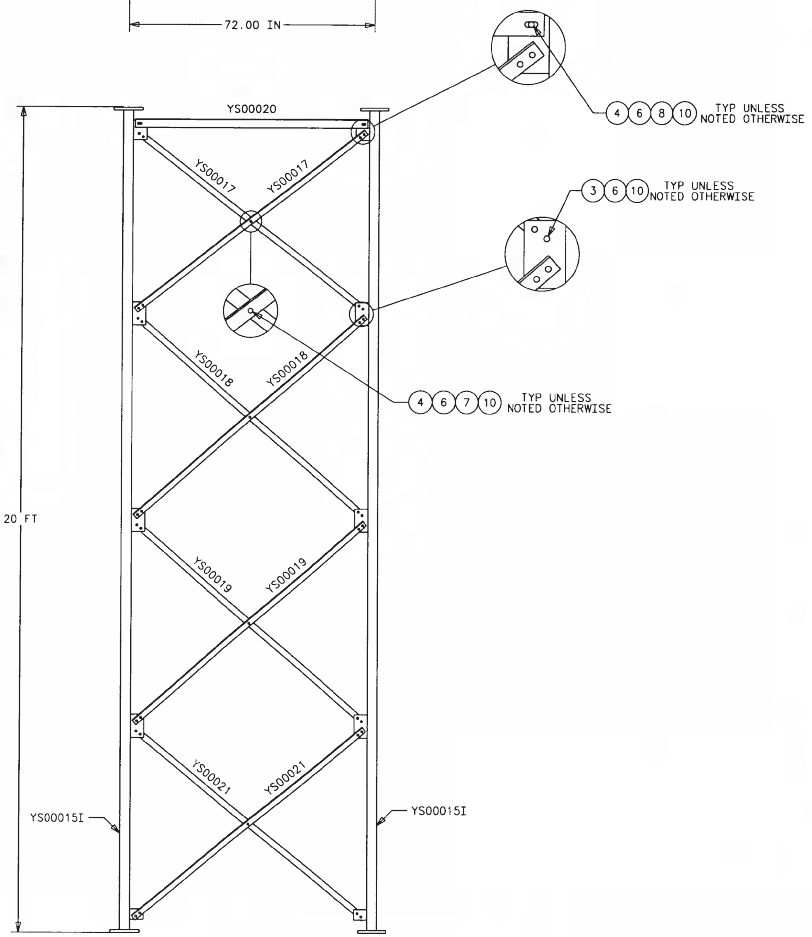

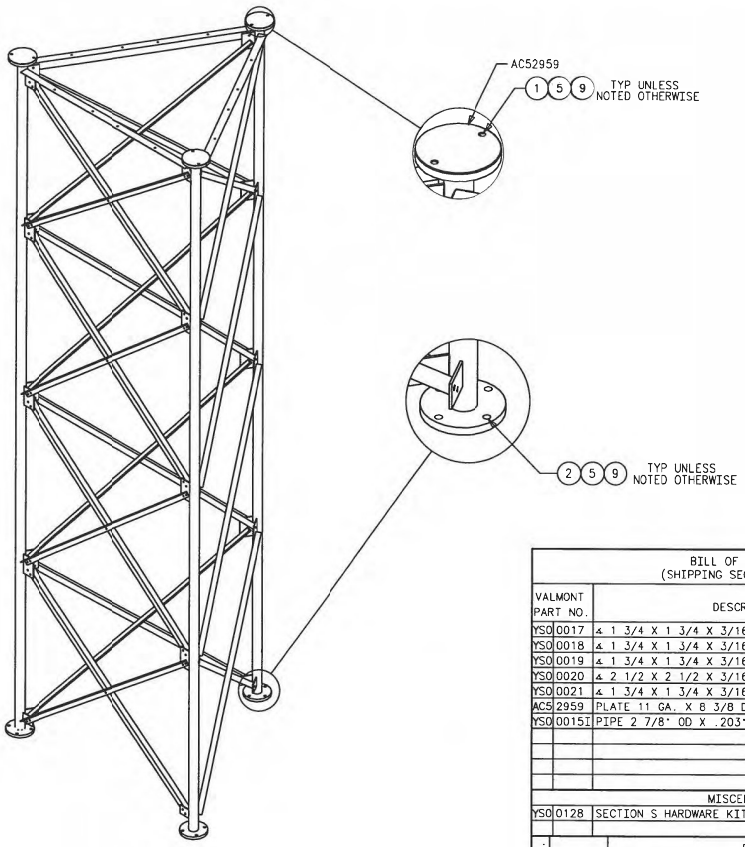

BILL OF MATERIAL
(SHIPPING SEQ.=1 FOR ALL)

VALMONT PART NO.	DESCRIPTION	UNIT WT (LBS)	QTY PER STR
YS0 0017	∠ 1 3/4 X 1 3/4 X 3/16 X 7'-0 7/8"	16	6
YS0 0018	∠ 1 3/4 X 1 3/4 X 3/16 X 7'-4 3/4"	17	6
YS0 0019	∠ 1 3/4 X 1 3/4 X 3/16 X 7'-4 3/4"	17	6
YS0 0020	∠ 2 1/2 X 2 1/2 X 3/16 X 5'-8 1/8"	19	3
YS0 0021	∠ 1 3/4 X 1 3/4 X 3/16 X 7'-2 9/16	16	6
AC5 2959	PLATE 11 GA. X 8 3/8 DIA	2	3
YS0 0015I	PIPE 2 7/8" OD X .203" WALL WELDMENT	157	3

MISCELLANEOUS

YS0 0128	SECTION S HARDWARE KIT	———	1

ITEM NO.	VALMONT PART NUMBER	DESCRIPTION							* QTY PER STR
		HARDWARE SIZE (IN)				GENERAL	FINISH	ASTM SPEC	
		BOLT		NUT	WSHR				
		DIA	LONG						
1		5/8	2 1/4			D	GALV	A325	7
2		5/8	3			D	GALV	A325	13
3		1/2	1 1/4			D	GALV	A325	101
4		1/2	1 1/2			D	GALV	A325	19
5				5/8		HVY HEX	GALV	A563	20
6				1/2		HVY HEX	GALV	A563	120
7					1/2	1/4 THK	GALV	———	13
8					1/2	FLAT	GALV	F436	7
9					5/8	LOCK	GALV	———	20
10					1/2	LOCK	GALV	———	120

HARDWARE PER ASTM A325-91C, EXCLUDE SECTIONS 6.3 & 9.2

REGISTERED PROFESSIONAL ENGINEER
JEFFREY E. GRASSMAN
C 63982
EXP. ———
CIVIL
STATE OF CALIFORNIA

NOTES:
1. HARDWARE QUANTITIES INCLUDE 5% EXTRA.
2. TOP FLANGE CONNECTION WILL USE 5/8" DIA X 2 1/4" LG. A325 BOLTS.
3. BOTTOM FLANGE CONNECTION WILL USE 5/8" DIA X 3" LG. A325 BOLTS.

DUPLICATE DRAWING DISTRIBUTION

TEC SECTION S COLOR CODE = PINK/PURPLE

DWG SIZE D CLASS CODE (1) 1 CLASS NO. (3) 450

REV ID	DATE	REV BY	CHK BY	REVISION DESCRIPTION

DRAWN RJS | ENGR | DATE 10/28/09 | SCALE NONE
P.A. CHK | SHOP CHK SM
OTHER SPECIFICATIONS
MATERIAL | THICKNESS | WEIGHT 924#

ORDER NO. | CUSTOMER 72-MODULAR | DESCRIPTION SECT. S COLOR CODE = PINK/PURPLE | DWG NO. YS0002TI

VALMONT MICROFLECT

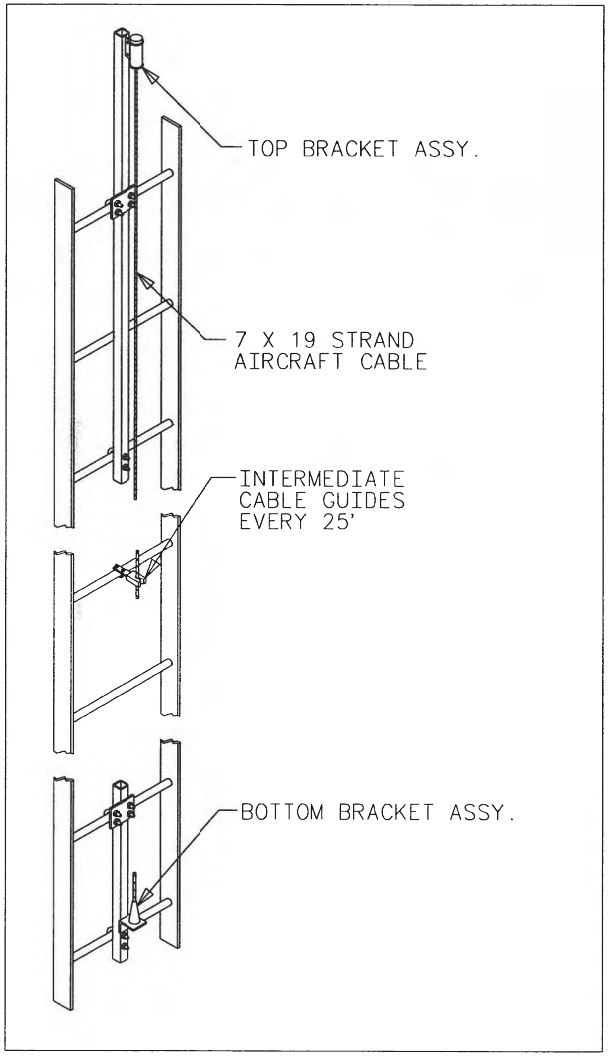

NOTES:
1. FOR COMPLETE INSTALLATION DETAILS AND PROCEDURES, SEE THE INSTALLATION GUIDELINES AS SUPPLIED BY VENDOR.
2. ALL CABLE GUIDES MUST BE ATTACHED AT APPROXIMATE 25'-0" VERTICAL SPACING.
3. CAUTION: USER MUST HAVE SECURE FOOTING, OR BE ATTACHED TO ANOTHER STRUCTURE WHEN DISCONNECTING OR CONNECTING TO THE SYSTEM.

REGISTERED PROFESSIONAL ENGINEER
JEFFREY E. GRASSMAN
C 63982
EXP.
CIVIL
STATE OF CALIFORNIA

BILL OF MATERIAL
(SHIPPING SEQ=1 FOR ALL)

B-PART COMPONENT NUMBER	DESCRIPTION	QTY PER ASSY
B3060	SAFETY-CLIMB CABLE SYSTEM KIT	1

DUPLICATE DRAWING DISTRIBUTION

△TEC 0-200 FT ANTI-FREEFALL KIT

DWG SIZE B CLASS CODE (1) 1 CLASS NO. (3) 450

REV ID	DATE	REV BY	CHK BY	REVISION DESCRIPTION
△	05/02/02	RJS	RJS	DESC. WAS 160 FT, 76#

DRAWN	ENGR	DATE	SCALE
RJS		04/11/02	NONE

P.A. CHK | SHOP CHK

OTHER SPECIFICATIONS

MATERIAL	THICKNESS	WEIGHT
		△ 79#

VALMONT MICROFLECT

ORDER NO.	CUSTOMER	DESCRIPTION	DWG NO.
		ANTI-FREEFALL KIT	BC5333Z

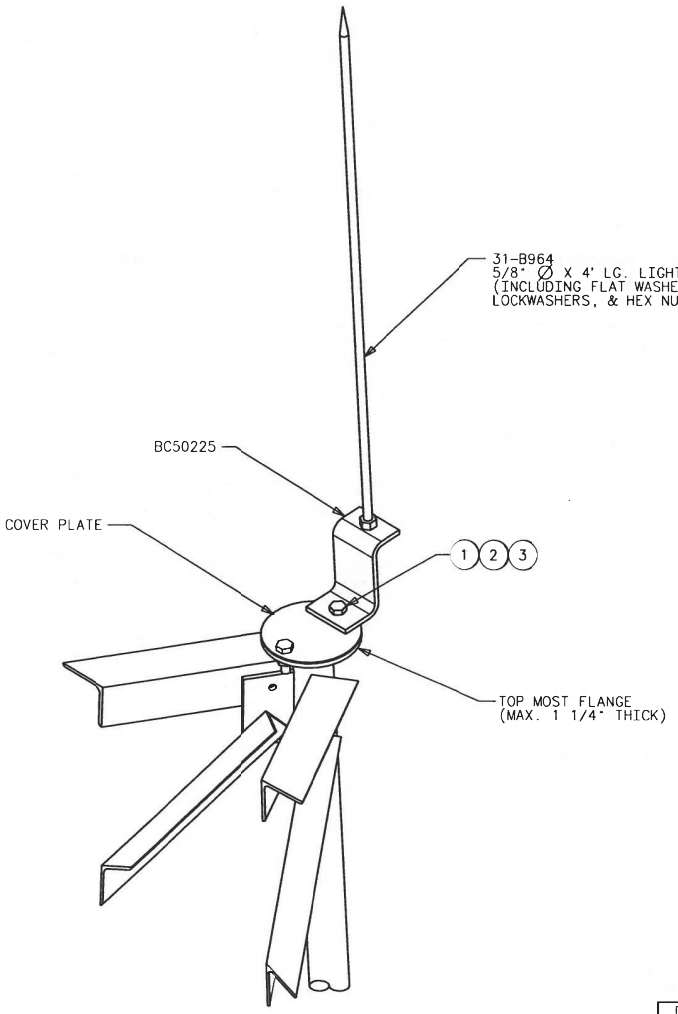

REGISTERED PROFESSIONAL ENGINEER
JEFFREY E. GRASSMAN
C 63982
EXP.
CIVIL
STATE OF CALIFORNIA

BILL OF MATERIAL
(SHIPPING SEQ.=1 FOR ALL)

VALMONT PART NO.	DESCRIPTION	UNIT WT (LBS)	QTY PER STR
BC5 0225	BAR 4 X 3/8 X 0'-10 5/8"	5	1
	5/8" DIA X 4'-0" LIGHTNING ROD W/HDWR	5	1

MISCELLANEOUS

ITEM NO.	VALMONT PART NUMBER	DESCRIPTION							* QTY PER STR
		HARDWARE SIZE (IN)							
		BOLT		NUT	WSHR	GENERAL	FINISH	ASTM SPEC	
		DIA	LONG						
B 1		5/8	2 3/4			D	GALV	GR5	1
A 2				5/8		HVY.HEX	GALV	A563	1
A 3					5/8	LOCK	GALV	----	1

HARDWARE PER ASTM A325-91C, EXCLUDE SECTIONS 6.3 & 9.2

DUPLICATE DRAWING DISTRIBUTION

TEC LTNG ROD ATTACHED TO TOP FLNG/CVR PL

DWG SIZE C CLASS CODE (1) 1 CLASS NO. (3) 450

REV ID	DATE	REV BY	CHK BY	REVISION DESCRIPTION
A	11/28/06	RJS	SM	DELETED HDW KIT AC51259
B	05/04/06	RJS	SM	BLT WAS 3.75 A449 FULL THRD
A	04/07/99	MJV	MJV	CHANGED HDWR BOM AS SHOWN

DRAWN JDP | ENGR | DATE 09/10/96 | SCALE NONE
P.A. CHK | SHOP CHK
OTHER SPECIFICATIONS
MATERIAL | THICKNESS | WEIGHT 10#

VALMONT MICROFLECT

ORDER NO. | CUSTOMER STANDARD | DESCRIPTION LIGHTNING ROD MNTG ASS'Y | DWG NO. CC50497

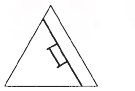

PLAN VIEW
1/4"=1'-0"

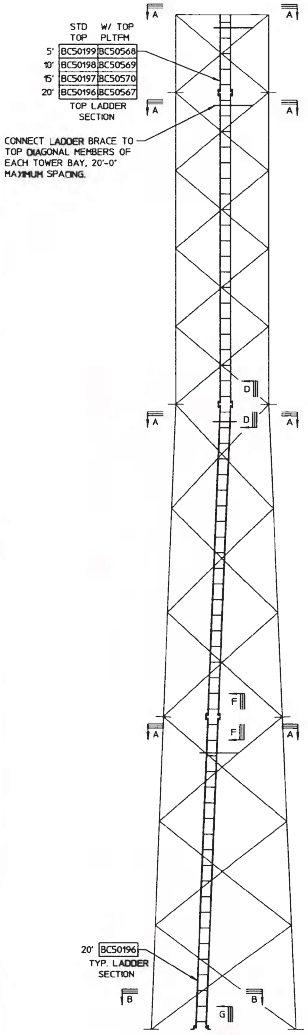

TOWER ELEVATION
1/4"=1'-0"

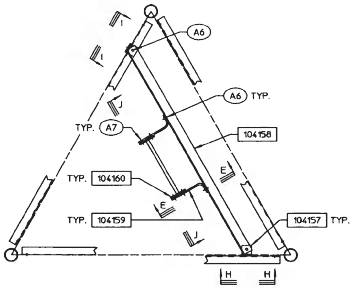

SECTION A-A
TYP. LADDER BRACE SECTION
3/4"=1'-0"

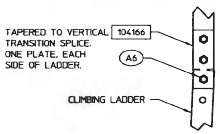

SECTION D-D
TRANSITION SPLICE
2"=1'-0"

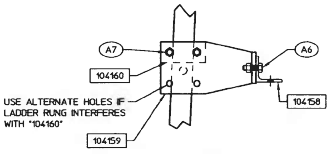

SECTION E-E
TYP. LADDER STANDOFF
2"=1'-0"

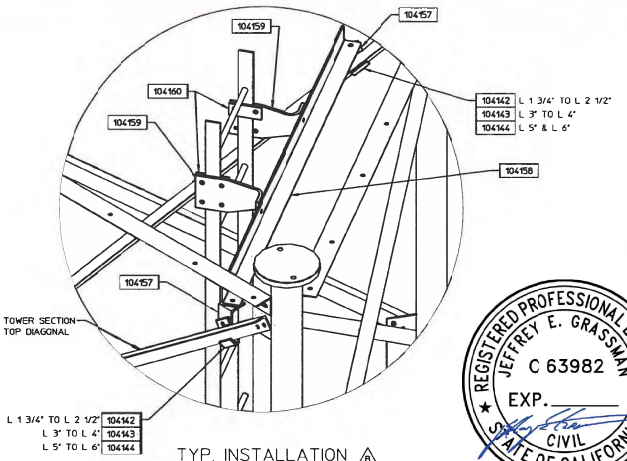

TYP. INSTALLATION B

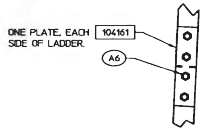

SECTION F-F
TYPICAL LADDER SPLICE
2"=1'-0"

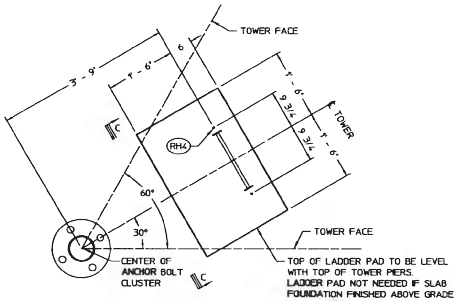

SECTION B-B
LADDER BASE PAD LAYOUT
3/4"=1'-0"

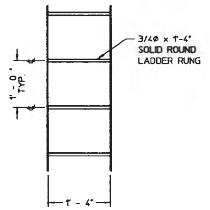

SECTION J-J
TYPICAL LADDER VIEW
3/4"=1'-0"

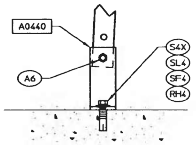

SECTION G-G
LADDER BASE ATTACHMENT
2"=1'-0"

C

PARTS LIST

MARK	DESCRIPTION
104142	CLIP PLATE - 1 3/4" TO 2 1/2" ANGLE
104143	CLIP PLATE - 3" TO 4" ANGLE
104144	CLIP PLATE - 5" AND 6" ANGLE
104157	LADDER ATTACHMENT ANGLE
104158	LADDER BRACE ANGLE
104159	LADDER STANDOFF PLATE
104160	LADDER STANDOFF BACKUP PLATE
104161	LADDER SPLICE PLATE
104166	LADDER TRANSITION SPLICE PLATE
A0440	LADDER BASE ANGLE
BC50199	CLIMBING LADDER - 5' SECTION
BC50198	CLIMBING LADDER - 10' SECTION
BC50197	CLIMBING LADDER - 15' SECTION
BC50196	CLIMBING LADDER - 20' SECTION
BC50568	CLIMBING LADDER - 5' TOP SEC @ RTBL PL
BC50569	CLIMBING LADDER - 10' TOP SEC @ RTBL PL
BC50570	CLIMBING LADDER - 15' TOP SEC @ RTBL PL
BC50567	CLIMBING LADDER - 20' TOP SEC @ RTBL PL

C

HARDWARE LIST

SYM	PART #	DESCRIPTION
A6	51-10414	1/2ø x 1 1/2 A325 BOLT, NUT & LW
A7	51-10416	1/2ø x 1 3/4 A325 BOLT, NUT & LW
S4X	54-10410	1/2ø x 1 S.S. BOLT
SL4	54-40080	1/2ø S.S. LOCK WASHER
SF4	54-30080	1/2ø S.S. FLAT WASHER
RH4	59-19110	1/2ø RED. HEAD ANCHOR
—	51-40440-LT	1/2ø x 5 HOOK BOLT, NUT & LW
—	51-40448	1/2ø x 6 HOOK BOLT, NUT & LW
—	51-40464	1/2ø x 8 HOOK BOLT, NUT & LW

USE W/ L 1 3/4" TO L 3"
USE W/ L 3 1/2" & L 4"
USE W/ L 5" & L 6"

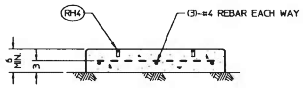

SECTION C-C
LADDER BASE PAD SECTION
LADDER PAD NOT NEEDED IF SLAB FOUNDATION FINISHED ABOVE GRADE IS USED FOR TOWER.
3/4"=1'-0"

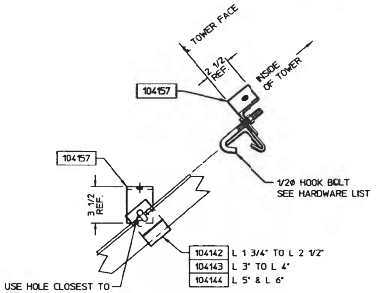

SECTION H-H
RIGHT DIAGONAL CONNECTION
2"=1'-0"

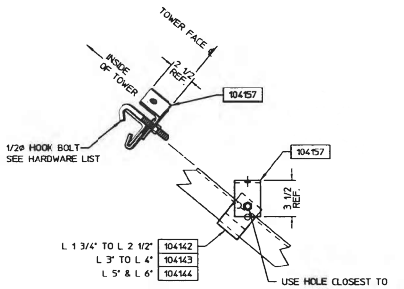

SECTION I-I
LEFT DIAGONAL CONNECTION
2"=1'-0"

SEE PACKING LIST FOR QUANTITIES SUPPLIED

REV	DESCRIPTION	DATE	BY/CK
D	ADDED NOTE, RESERVED LADDER PAD NOTE	19MAY22	PDC
C	ADDED ADDL CLIMB LADDERS, REVISED 4" HOOK BLT, 5" HOOK -LT	02JUL12	PDC RJS
B	ADDED TYP. INSTALLATION DETAIL	27FEB07	PDC RJS
A	ADDED REF. DWTS. & ORIENTATION NOTES TO SHEET 1	19JAN00	PDC RJS

CLIMBING LADDER INSTALLATION
900 SERIES TOWERS

valmont MICROFLECT
3575 25TH STREET SE, SALEM, OR 97302
PHONE 503/363-9267 FAX 503/316-2040

BY PDC	CK RS	D-103934
DATE 9APR99		
S.O.		SHEET: 1 OF 1

STACKER RUNG KIT

MARK	REQ'D	DESCRIPTION
123327	2	PIPE SPACER, 5" LONG
123494	1	LADDER STACKER RUNG (14 HOLE)
51-20564	2	5/8Ø x 6 1/2 G5 BOLT, NUT & LW

THE STACKER RUNG ASSEMBLY IS NOT TO BE USED AS A CLIMBING DEVICE.

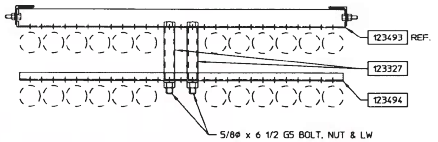

STACKER RUNG DETAIL
2"-1"-0"

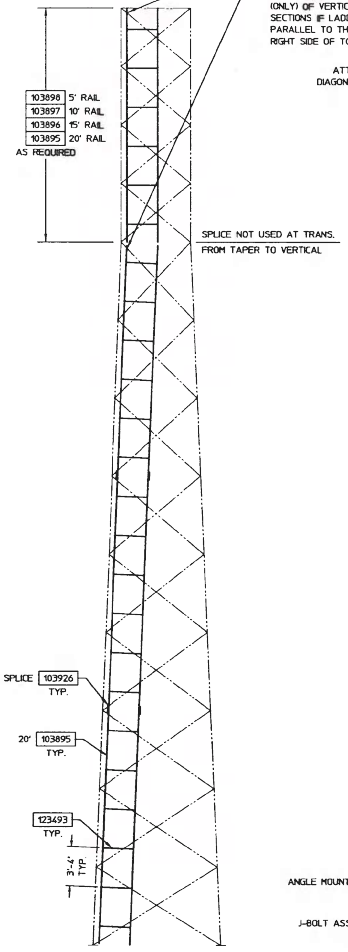

ELEVATION
3/16"-1"-0"

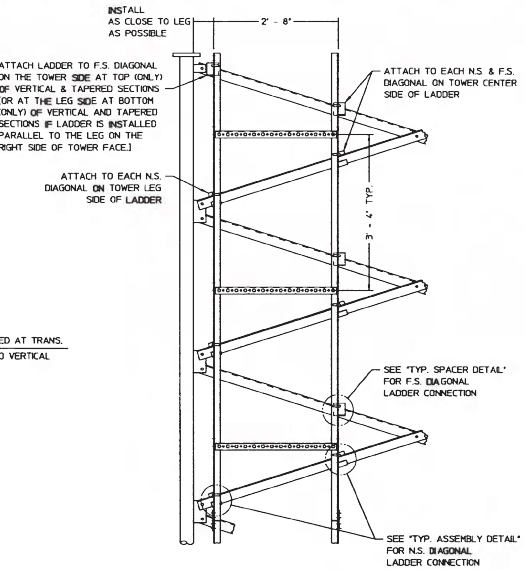

TYPICAL ELEVATION DETAIL
3/4"-1"-0"

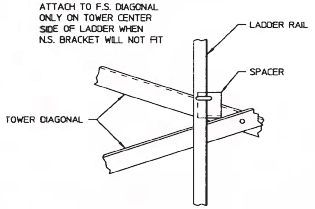

ALTERNATE ATTACHMENT
1 1/2"-1"-0"

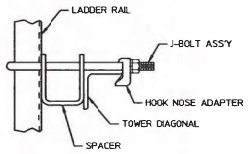

TYPICAL SPACER DETAIL
3"-1"-0"

NOTE:
IT IS CRITICAL THAT THE LINE LOADING IS APPLIED AS SHOWN. DEVIATIONS COULD RESULT IN TOWER LOADING THAT EXCEEDS THE DESIGN VALUES.

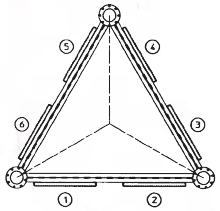

POSSIBLE COAX LADDER POSITIONS
WAVEGUIDE FROM MICROWAVE ANTENNAS MAY BE ATTACHED USING OPEN HOLES IN LADDER OR VIA LEG CLAMP BRACKETS DOWN TOWER LEGS.

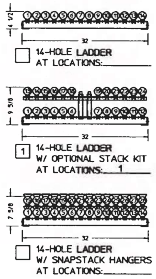

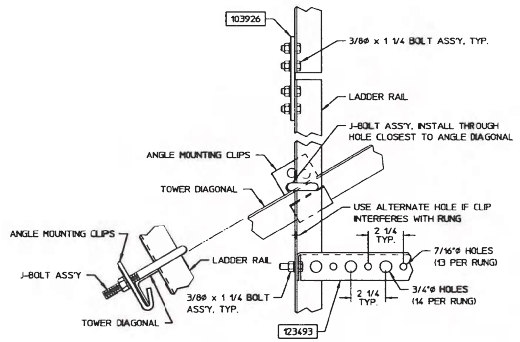

TYPICAL ASSEMBLY DETAIL
3"-1"-0"

5' W/G LADDER SECTION

MARK	REQ'D	DESCRIPTION
103898	2	5' W/G LADDER RAIL
123493	2	LADDER RUNG (14 HOLE)
103926	2	RAIL SPLICE PLATE
51-20312	12	3/8Ø x 1 1/4 G5 BOLT, NUT & LW

10' W/G LADDER SECTION

MARK	REQ'D	DESCRIPTION
103897	2	10' W/G LADDER RAIL
123493	3	LADDER RUNG (14 HOLE)
103926	2	RAIL SPLICE PLATE
51-20312	14	3/8Ø x 1 1/4 G5 BOLT, NUT & LW

15' W/G LADDER SECTION

MARK	REQ'D	DESCRIPTION
103896	2	15' W/G LADDER RAIL
123493	5	LADDER RUNG (14 HOLE)
103926	2	RAIL SPLICE PLATE
51-20312	18	3/8Ø x 1 1/4 G5 BOLT, NUT & LW

20' W/G LADDER SECTION

MARK	REQ'D	DESCRIPTION
103895	2	20' W/G LADDER RAIL
123493	6	LADDER RUNG (14 HOLE)
103926	2	RAIL SPLICE PLATE
51-20312	20	3/8Ø x 1 1/4 G5 BOLT, NUT & LW

REGISTERED PROFESSIONAL ENGINEER
JEFFREY E. GRASSMAN
C 63982
EXP.
CIVIL
STATE OF CALIFORNIA

W/G LADDER MOUNTING CLIPS

MTG. CLIP	DIAGONAL SIZE (L)	J-BOLT	DESCRIPTION
104142	L 1 3/4" TO L 2 1/2"	51-40456-LT	1/2Ø x 7 J-BOLT, NUT & LW
104143	L 3" TO L 4"	51-40456-LT	1/2Ø x 7 J-BOLT, NUT & LW
104144	L 5" & L 6"	51-40472-LT	1/2Ø x 9 J-BOLT, NUT & LW

W/G LADDER SPACERS

SPACER	DIAGONAL SIZE (L)	J-BOLT	DESCRIPTION	ADAPTER	DESCRIPTION
104146	L 1 3/4" & L 2"	51-40472-LT	1/2Ø x 9 J-BOLT, NUT & LW	59-19128	1/2" HOOK NOSE ADAPTER-FLAT TOP
104147	L 2 1/2"	51-40472-LT	1/2Ø x 9 J-BOLT, NUT & LW	59-19128	1/2" HOOK NOSE ADAPTER-FLAT TOP
104148	L 3"	51-40492-LT	1/2Ø x 12 J-BOLT, NUT & LW	59-19128	1/2" HOOK NOSE ADAPTER-FLAT TOP
104149	L 3 1/2"	51-40492-LT	1/2Ø x 12 J-BOLT, NUT & LW	59-19128	1/2" HOOK NOSE ADAPTER-FLAT TOP
104150	L 4"	51-40492-LT	1/2Ø x 12 J-BOLT, NUT & LW	59-19128	1/2" HOOK NOSE ADAPTER-FLAT TOP
104151	L 5"	51-40500-LT	1/2Ø x 16 J-BOLT, NUT & LW	59-19128	1/2" HOOK NOSE ADAPTER-FLAT TOP
104152	L 6"	51-40500-LT	1/2Ø x 16 J-BOLT, NUT & LW	59-19128	1/2" HOOK NOSE ADAPTER-FLAT TOP

SEE PACKING LIST FOR QUANTITIES SUPPLIED

REV	DESCRIPTION	DATE	BY/CK
B	ADDED NOTE REGARDING F.S. DIAG. LADDER INSTALLED PARALLEL TO LEG ON RIGHT	5OCT17	PDC/JM
A	ADDED COAX TO VACANT W/G LADDER LOCS	20DEC12	PDC/JM

COAX LADDER INSTALLATION
14-HOLE RUNG, 24-HOLE W/ STACKER KIT
900 SERIES TOWERS

valmont STRUCTURES
1-877-467-4763 Plymouth, IN
1-800-547-2151 Salem, OR

BY PDC | CK JM | D-123495
DATE 9APR07
S.O. | SHEET: 1 OF 1

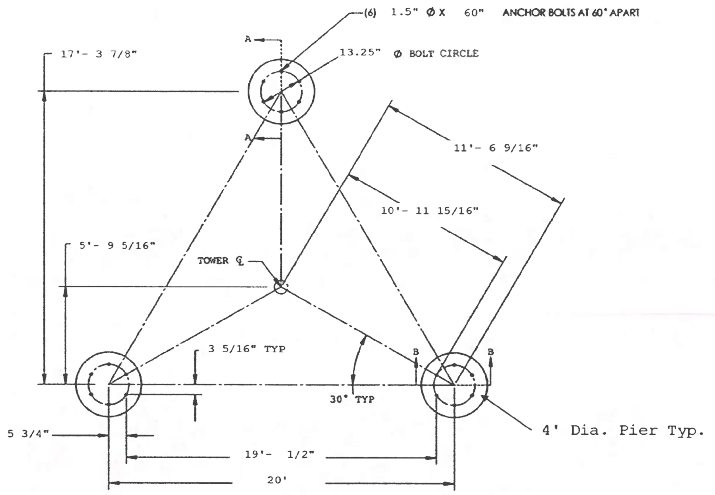

FOUNDATION & ANCHOR BOLT LAYOUT PLAN
(NO SCALE)

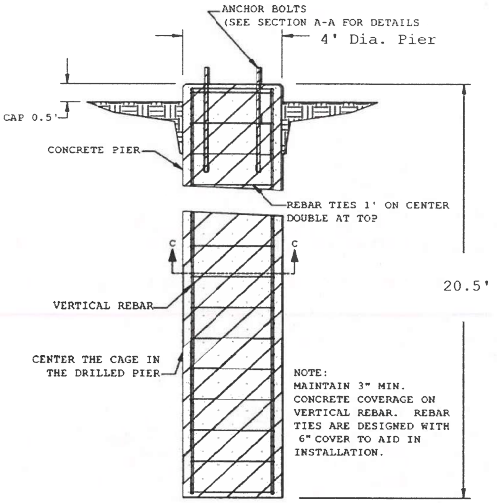

SECTION B-B
PIER ELEVATION
(NO SCALE)

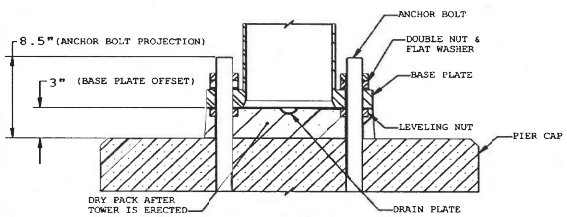

SECTION A-A TYP
DRAIN PLATE INSTALLATION
(NO SCALE)
Note: EXTREME CARE SHOULD BE TAKEN TO ENSURE THAT ALL LEVELING NUTS ARE LEVEL WITH RESPECT TO EACH OTHER PRIOR TO ERECTION OF THE TOWER

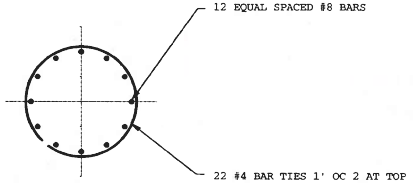

SECTION C-C
PIER REBAR LAYOUT
(NO SCALE)

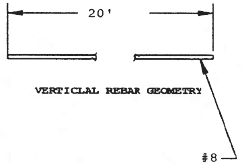

VERTICLAL REBAR GEOMETRY

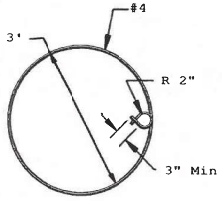

REBAR TIE GEOMETRY

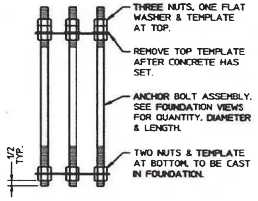

ANCHOR BOLT ASSEMBLY
NO SCALE

GENERAL NOTES: DRILLED PIER

1. Prior to excavation, check the area for underground facilities.
2. All reinforcing shall be deformed bars conforming to ASTM A615 Grade 60 (60,000 psi min. yield) and shall be provided by the foundation contractor.
3. All concrete shall have a minimum compressive strength of 4000 psi @ 28 days. The requirement for the concrete shall be as given in the ACI "Building Code Requirements for Reinforced Concrete", ACI 318, the latest edition.
4. The tops of pedestals at the same elevation shall be level with each other within 1/4 inch. Trowel tops of pedestals smooth.
5. Steel reinforcement and concrete should be placed immediately upon completion of the pier excavations. Contractor shall not allow a cold joint to form in the pier. Portion above grade should be formed. Temporary casing may be required to prevent caving prior to concrete placement.
6. Ground water was not encountered below grade during boring.
7. Concrete is assumed to weigh 150 pcf.
8. Dry Packing Procedures: Mix 2 parts sand, one part cement, and add just enough water to allow molding a shape by hand. Restrict the water content to a minimum . (This minimizes the possibility of shrinkage when the mortar, dry-mixed for maximum density and strength, is packed in place.) The packing shall be done by hand, ramming with bars or caulking tools, or a combination thereof.
9. Estimated concrete volume = **29 cubic yards total**
10. Design Based on the following factored loads from installation drawing for order number 562784, Dated,01/30/2023
    Factored Uplift = 182 KIP
    Factored Download = 198 KIP
    Factored Shear = 19.3 KIP
11. Reference: Geotechnical Firm, Blackburn Consulting, Report, File No. 4211.X, Dated July 8, 2022.
12. A representative of the Professional Geotechnical Firm Blackburn Consulting should be present during construction, to verify the soils are consistent with soil borings and assumptions.

Reinforcement Steel Schedule						Total	Total
-	Type	Rebar size	Rebar Spacing	Bar Length (ft)	Bar Weight lb/ft	Weight (lb)	BAR Qty
1	Vertical	#8	EQUAL	20'	2.67	1922	36
2	Ties	#4	1'-0"	10'- 7 3/16"	0.67	469	66

TOTAL STEEL WEIGHT FOR COMPLETE FOUNDATION INSTALLATION = **2391#**

REBAR LAP SPLICE TABLE		Ref. ACI 318-05	
Rebar Size	Rebar Grade	CONCRETE STRENGTH PSI	VERTICAL REBAR OVERLAP
#8	60	4000	43"

NOTES: Splicing is an alternative to specified material listed in rebar schedule. Where vertical bars are to be spliced, splices should be staggered.

GRADE 60 REBAR TIES		HOOK GEOMETRY	
Rebar Size	Standard Splice Length, inches	6db* **	4db*
		Min Length	Nominal Radius
#4	Not Applicable	3" Min	R 2"

* db = Bar Diameter
** Refers to Stirrup hook detail 6db 3in min.

Jeffrey E Grassman
Digitally signed by Jeffrey E Grassman
Date: 2023.02.02 15:56:59 -08'00'

REGISTERED PROFESSIONAL ENGINEER
JEFFREY E. GRASSMAN
C 63982
EXP. 9/30/24
CIVIL
STATE OF CALIFORNIA

UNLESS OTHERWISE NOTED DIMENSIONS ARE IN INCHES TOLERANCES ARE:
X'- X X/X" - ± 1/8"
X X/X" - ± 1/16"
X" - ± 1/8"
X" - ± 1/16"

valmont MICROFLECT
3575 25TH STREET SE
SALEM, OR 97302
MAIN (503) 363-9267
FAX (503) 316-2040

By:	JG	DRILLED PIER FOUNDATION LAYOUT
Check:	MF	CUSTOMER:City of Roseville
Date:	01/30/23	SITE: Strauch Drive, CA

ANALYSIS VERSION: 3.08 | S.O.#562784 | SIZE - B | DWG NO. B-152715 | Sheet 1 of 1

PARTS LIST	
MARK	REQ'D
129874	3
144375	3

HARDWARE LIST		
SYM	QTY	DESCRIPTION
J7	12	5/8ø x 1 3/4 G5 BOLT, NUT & L.W.

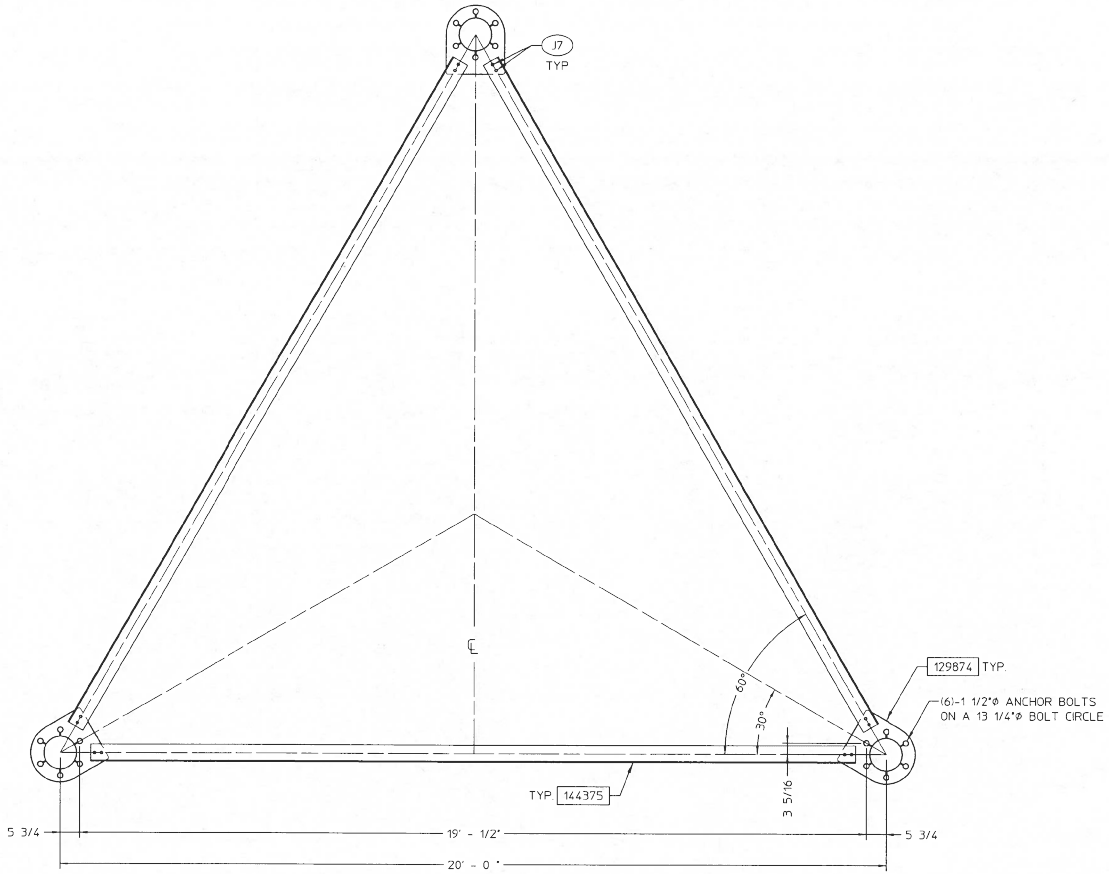

TOWER ANCHOR BOLT LAYOUT

1/2"=1'-0"

REGISTERED PROFESSIONAL ENGINEER
JEFFREY E. GRASSMAN
C 63982
EXP.
CIVIL
STATE OF CALIFORNIA

REV	DESCRIPTION	DATE	BY/CK

ANCHOR BOLT SETTING TEMPLATE
(6)-1 1/2"ø ON A 13 1/4" BOLT CIRCLE
20'-0" BASE WIDTH 3-LEG TOWER

valmont
MICROFLECT
3575 25TH STREET SE, SALEM, OR 97302
MAIN: (503)363-9267 FAX: (503)316-2040

BY PDC	CK MF	C-144376
DATE 04AUG16		
S.O.		SHEET 1 OF 1

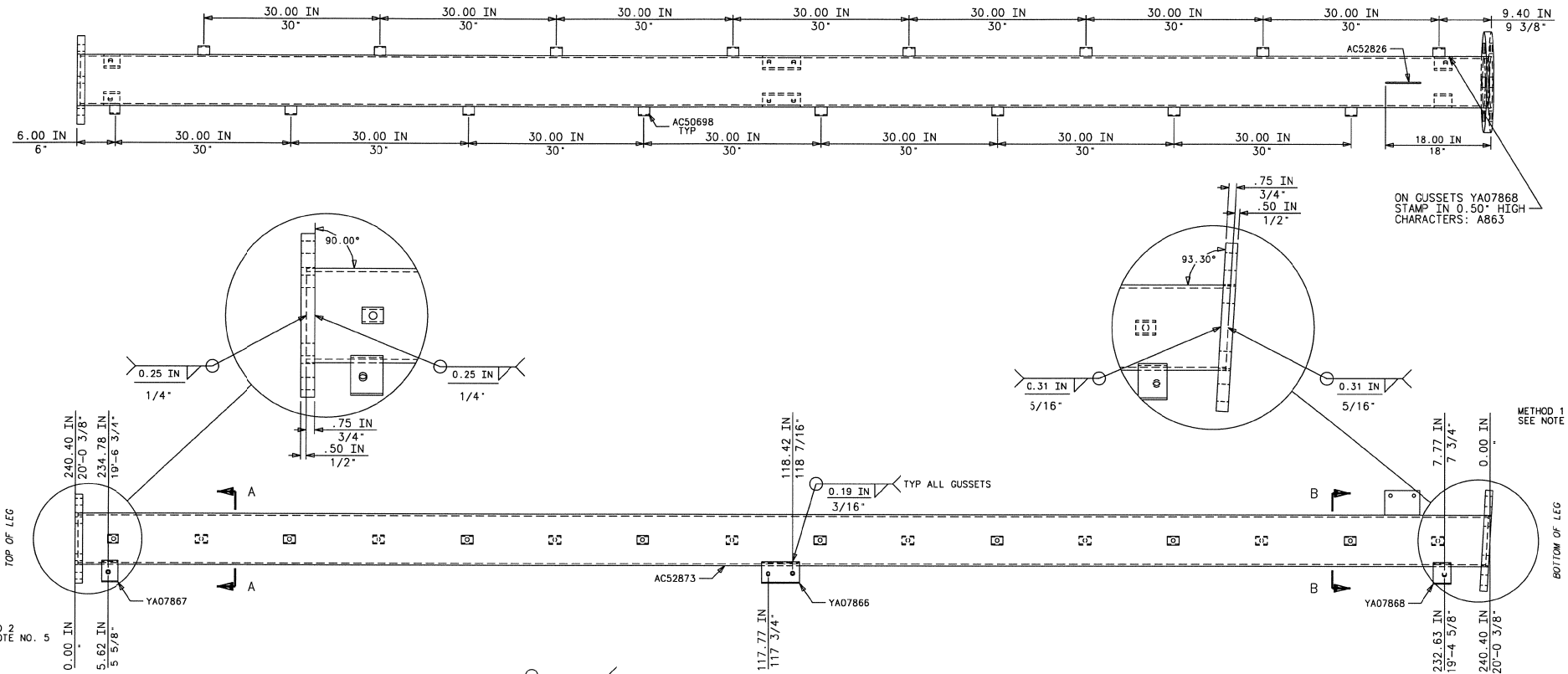

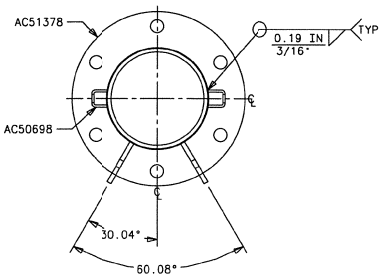

SECTION A–A

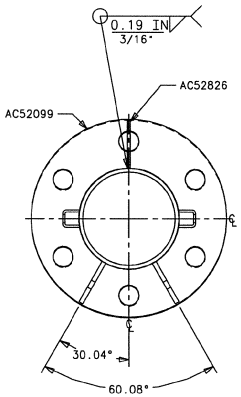

SECTION B–B

NOTES:

1. ALL GUSSET PLATES HAVE 0.69 IN DIA HOLES.
2. TOP FLANGE HAS 1.13 IN DIA HOLES & BOTTOM FLANGE HAS 1.75 IN DIA HOLES.
3. GUSSET PLATE POSITION DIMENSIONS ARE AS SHOWN ON THE DRAWING; FOR FURTHER INFORMATION REGARDING GUSSET PLATE POSITIONS & ORIENTATION, REFER TO SPECIFICATION NO. M-74.
4. USE OF GUSSET PLATE I.D. STAMP FOR CORRECT ORIENTATION OF GUSSET PLATES IS FULLY EXPLAINED IN SPECIFICATION NO. M-74.
5. DIMENSIONING: USE "METHOD 1" FROM "BOTTOM OF LEG" OR "METHOD 2" FROM "TOP OF LEG". DO NOT USE BOTH, OR DO NOT MIX BOTH.

REGISTERED PROFESSIONAL ENGINEER
JEFFREY E. GRASSMAN
C 63982
EXP. 9/30/24
CIVIL
STATE OF CALIFORNIA

BILL OF MATERIAL
(SHIPPING SEQ=0 FOR ALL)

VALMONT PART NO.	DESCRIPTION	QTY PER ASSY
YA07868	BAR 4 X 3/8 X 3"	2
YA07866	BAR 4 X 3/8 X 6 1/2"	2
YA07867	BAR 4 X 3/8 X 3"	2
AC51378	PLATE 1 1/4 X 1-2 15/16 DIA	1
AC52099	PLATE 1 1/4 X 1-5 DIA	1
AC52873	PIPE 8 5/8" OD X .322" WALL	1
AC52826	BAR 6 X 1/4 X 0-4 1/8"	1
AC50698	PLATE 7 GA X 1 3/8 X 0'-3"	16

DUPLICATE DRAWING DISTRIBUTION

IEC PIPE 8 5/8" OD X .322" WALL WELDMENT

DWG SIZE D | CLASS CODE (1) 4 | CLASS NO. (3) 999

REV ID	DATE	REV BY	CHK BY	REVISION DESCRIPTION

DRAWN	ENGR	DATE	SCALE
RJS		01/05/10	NONE

P.A. CHK | SHOP CHK

OTHER SPECIFICATIONS
F-1, M-58, M-68, M-74, W-54

MATERIAL	THICKNESS	WEIGHT
		696#

VALMONT MICROFLECT

ORDER NO.	CUSTOMER	DESCRIPTION	DWG NO.
13075-09	MOTOROLA	A-SECTION LEG WELDMENT	YA07863

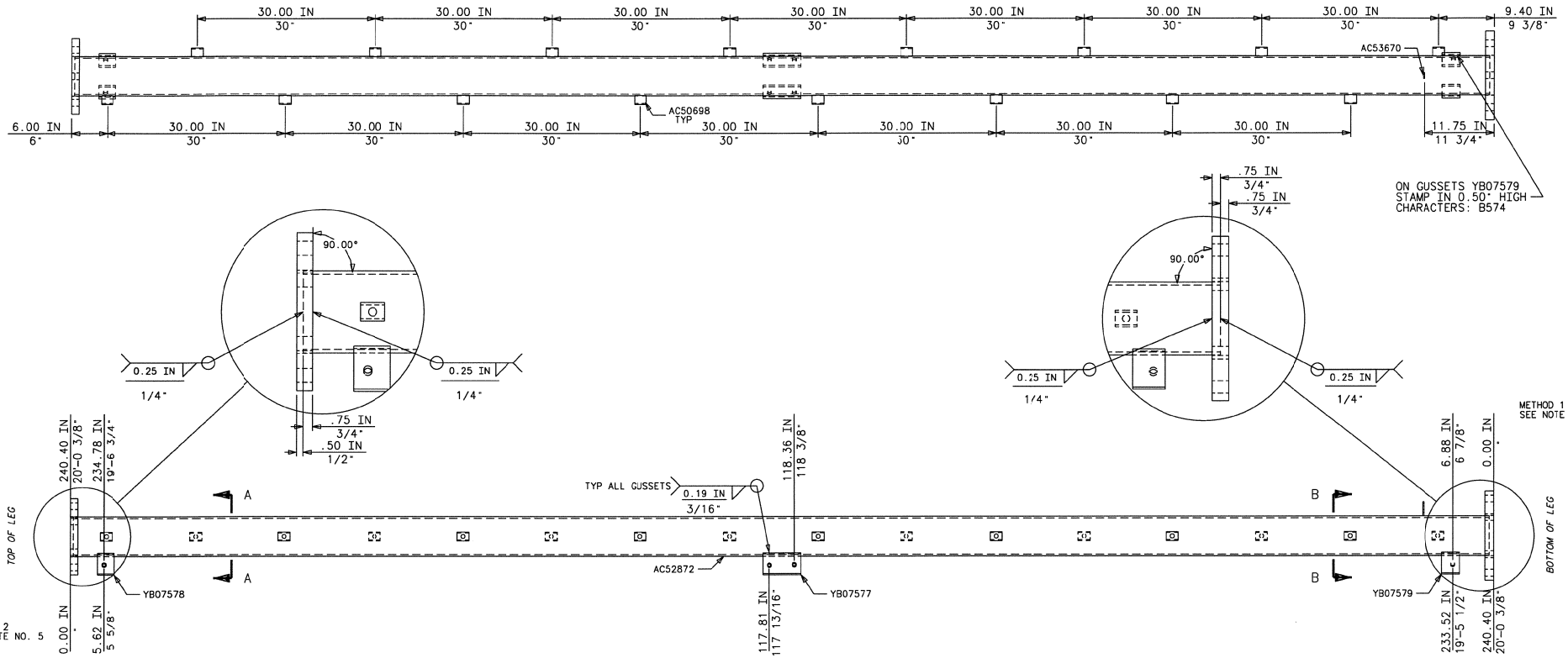

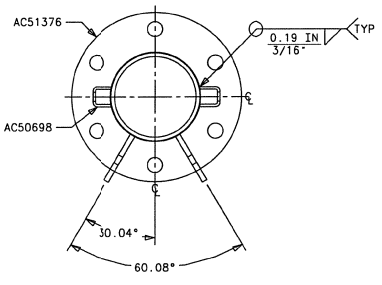

SECTION A–A

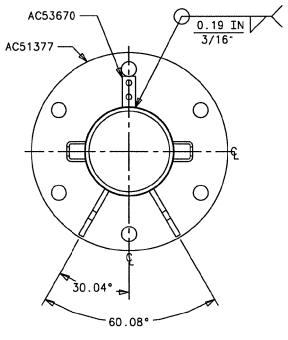

SECTION B–B

NOTES:

1. ALL GUSSET PLATES HAVE 0.69 IN DIA HOLES.
2. TOP FLANGE HAS 1.13 IN DIA HOLES & BOTTOM FLANGE HAS 1.13 IN DIA HOLES.
3. GUSSET PLATE POSITION DIMENSIONS ARE AS SHOWN ON THE DRAWING; FOR FURTHER INFORMATION REGARDING GUSSET PLATE POSITIONS & ORIENTATION, REFER TO SPECIFICATION NO. M-74.
4. USE OF GUSSET PLATE I.D. STAMP FOR CORRECT ORIENTATION OF GUSSET PLATES IS FULLY EXPLAINED IN SPECIFICATION NO. M-74.
5. DIMENSIONING: USE "METHOD 1" FROM "BOTTOM OF LEG" OR "METHOD 2" FROM "TOP OF LEG". DO NOT USE BOTH, OR DO NOT MIX BOTH.

REGISTERED PROFESSIONAL ENGINEER
JEFFREY E. GRASSMAN
C 63982
EXP.
CIVIL
STATE OF CALIFORNIA

BILL OF MATERIAL
(SHIPPING SEQ=0 FOR ALL)

VALMONT PART NO.	DESCRIPTION	QTY PER ASSY
YB07578	BAR 4 X 3/8 X 3"	2
YB07577	BAR 4 X 3/8 X 6 1/2"	2
YB07579	BAR 4 X 3/8 X 3"	2
AC51376	PLATE 1 1/4 X 1-0 3/4 DIA	1
AC51377	PLATE 1 1/2 X 1-2 15/16 DIA	1
AC52872	PIPE 6 5/8" OD X .280" WALL	1
AC53670	PLATE 1/4 X 1 X 0-2 3/8"	1
AC50698	PLATE 7 GA X 1 3/8 X 0'-3"	16

DUPLICATE DRAWING DISTRIBUTION

TEC PIPE 6 5/8" OD X .280" WALL WELDMENT

DWG SIZE D | CLASS CODE (1) 4 | CLASS NO. (3) 999

REV ID	DATE	REV BY	CHK BY	REVISION DESCRIPTION

DRAWN RJS | ENGR | DATE 01/05/10 | SCALE NONE
P.A. CHK | SHOP CHK
OTHER SPECIFICATIONS F-1,M-58,M-68,M-74,W-54
MATERIAL | THICKNESS | WEIGHT 495#

ORDER NO. 13075-09 | CUSTOMER MOTOROLA | DESCRIPTION B-SECTION LEG WELDMENT | DWG NO. YB07574

VALMONT MICROFLECT

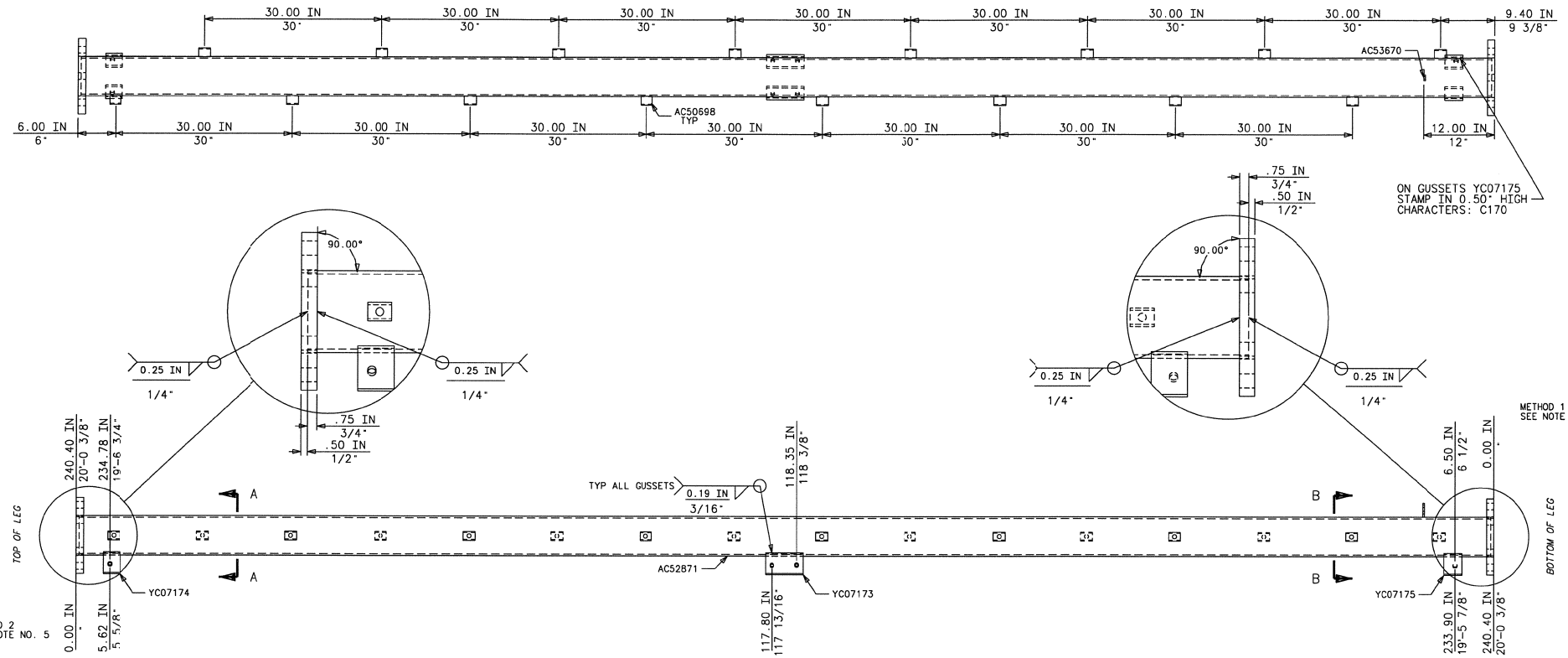

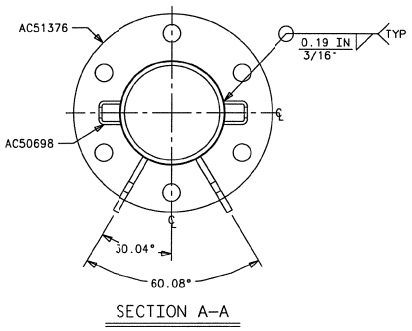

SECTION A–A

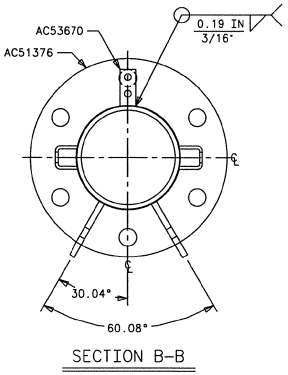

SECTION B–B

NOTES:

1. ALL GUSSET PLATES HAVE 0.69 IN DIA HOLES.
2. TOP FLANGE HAS 1.13 IN DIA HOLES & BOTTOM FLANGE HAS 1.13 IN DIA HOLES.
3. GUSSET PLATE POSITION DIMENSIONS ARE AS SHOWN ON THE DRAWING; FOR FURTHER INFORMATION REGARDING GUSSET PLATE POSITIONS & ORIENTATION, REFER TO SPECIFICATION NO. M-74.
4. USE OF GUSSET PLATE I.D. STAMP FOR CORRECT ORIENTATION OF GUSSET PLATES IS FULLY EXPLAINED IN SPECIFICATION NO. M-74.
5. DIMENSIONING: USE "METHOD 1" FROM "BOTTOM OF LEG" OR "METHOD 2" FROM "TOP OF LEG". DO NOT USE BOTH, OR DO NOT MIX BOTH.

REGISTERED PROFESSIONAL ENGINEER
JEFFREY E. GRASSMAN
C 63982
EXP.
CIVIL
STATE OF CALIFORNIA

BILL OF MATERIAL
(SHIPPING SEQ=0 FOR ALL)

VALMONT PART NO.	DESCRIPTION	QTY PER ASSY
YC07174	BAR 4 X 3/8 X 3"	2
YC07173	BAR 4 X 3/8 X 6 1/2"	2
YC07175	BAR 4 X 3/8 X 3"	2
AC51376	PLATE 1 1/4 X 1-0 3/4 DIA	2
AC52871	PIPE 6 5/8" OD X .280" WALL	1
AC53670	PLATE 1/4 X 1 X 0-2 3/8"	1
AC50698	PLATE 7 GA X 1 3/8 X 0'-3"	16

DUPLICATE DRAWING DISTRIBUTION

TEC PIPE 6 5/8" OD X .280" WALL WELDMENT

DWG SIZE D | CLASS CODE (1) 4 | CLASS NO. (3) 999

DRAWN	ENGR	DATE	SCALE
RJS		01/05/10	NONE

P.A. CHK | SHOP CHK

OTHER SPECIFICATIONS
F-1,M-58,M-68,M-74,W-54

MATERIAL	THICKNESS	WEIGHT
		468#

REV ID	DATE	REV BY	CHK BY	REVISION DESCRIPTION

ORDER NO.	CUSTOMER	DESCRIPTION	DWG NO.
13075-09	MOTOROLA	C-SECTION LEG WELDMENT	YC07170

VALMONT MICROFLECT

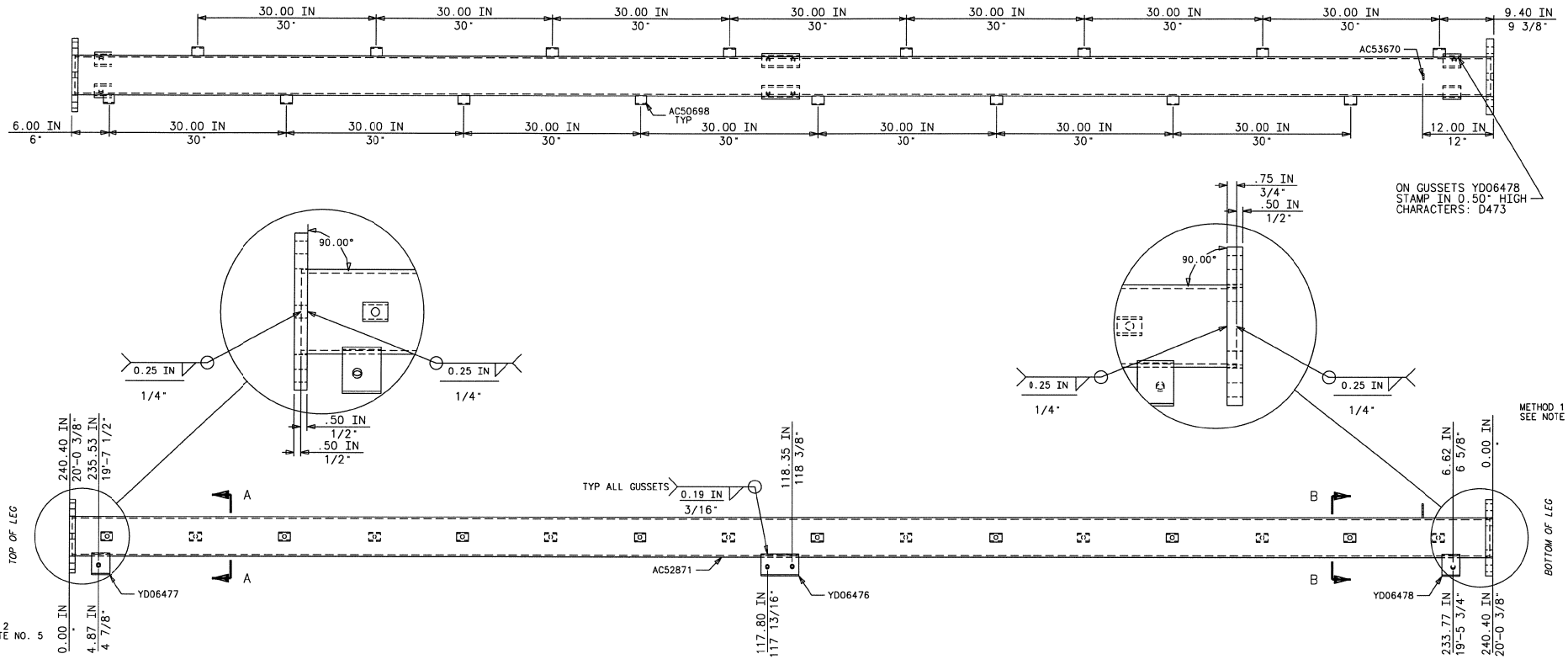

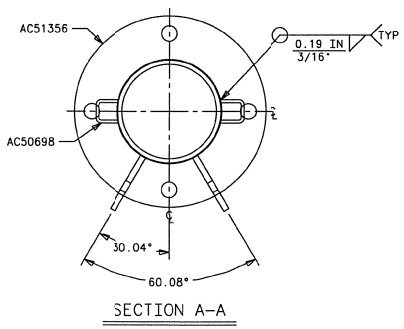

SECTION A–A

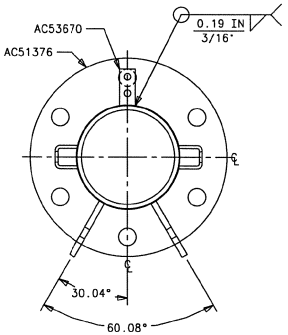

SECTION B–B

NOTES:

1. ALL GUSSET PLATES HAVE 0.69 IN DIA HOLES.
2. TOP FLANGE HAS 1.00 IN DIA HOLES & BOTTOM FLANGE HAS 1.13 IN DIA HOLES.
3. GUSSET PLATE POSITION DIMENSIONS ARE AS SHOWN ON THE DRAWING; FOR FURTHER INFORMATION REGARDING GUSSET PLATE POSITIONS & ORIENTATION, REFER TO SPECIFICATION NO. M-74.
4. USE OF GUSSET PLATE I.D. STAMP FOR CORRECT ORIENTATION OF GUSSET PLATES IS FULLY EXPLAINED IN SPECIFICATION NO. M-74.
5. DIMENSIONING: USE "METHOD 1" FROM "BOTTOM OF LEG" OR "METHOD 2" FROM "TOP OF LEG" DO NOT USE BOTH, OR DO NOT MIX BOTH.

REGISTERED PROFESSIONAL ENGINEER
JEFFREY E. GRASSMAN
C 63982
EXP.
CIVIL
STATE OF CALIFORNIA

BILL OF MATERIAL
(SHIPPING SEQ=0 FOR ALL)

VALMONT PART NO.	DESCRIPTION	QTY PER ASSY
YD06477	BAR 4 X 3/8 X 3"	2
YD06476	BAR 4 X 3/8 X 6 1/2"	2
YD06478	BAR 4 X 3/8 X 3"	2
AC51356	PLATE 1 X 1-0 5/16 DIA	1
AC51376	PLATE 1 1/4 X 1-0 3/4 DIA	1
AC52871	PIPE 6 5/8" OD X .280" WALL	1
AC53670	PLATE 1/4 X 1 X 0-2 3/8"	1
AC50698	PLATE 7 GA X 1 3/8 X 0'-3"	16

DUPLICATE DRAWING DISTRIBUTION

TEC PIPE 6 5/8" OD X .280" WALL WELDMENT

DWG SIZE D | CLASS CODE (1) 4 | CLASS NO. (3) 999

DRAWN	ENGR	DATE	SCALE
RJS		01/05/10	NONE

P.A. CHK | SHOP CHK

OTHER SPECIFICATIONS: F-1, M-58, M-68, M-74, W-54

MATERIAL | THICKNESS | WEIGHT 460#

REV ID	DATE	REV BY	CHK BY	REVISION DESCRIPTION

ORDER NO. 13075-09 | CUSTOMER MOTOROLA | DESCRIPTION D-SECTION LEG WELDMENT | DWG NO. YD06473

VALMONT MICROFLECT

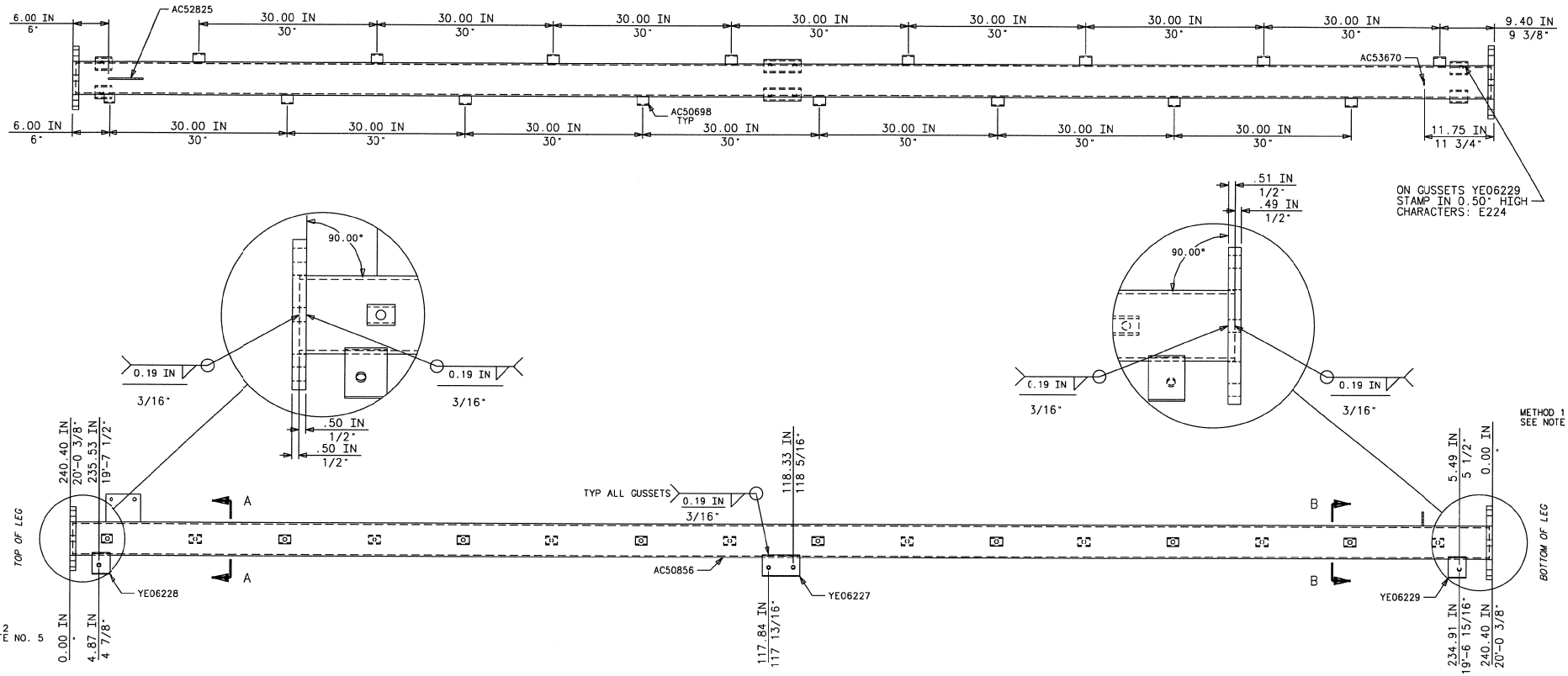

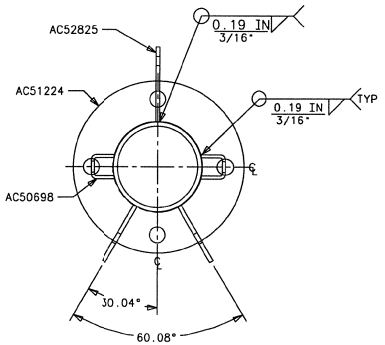

SECTION A–A

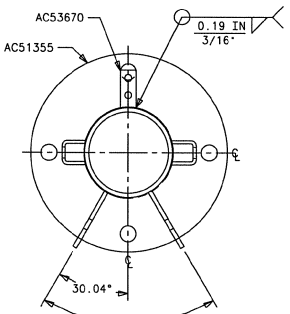

SECTION B–B

NOTES:

1. ALL GUSSET PLATES HAVE 0.69 IN DIA HOLES.
2. TOP FLANGE HAS 1.00 IN DIA HOLES & BOTTOM FLANGE HAS 1.00 IN DIA HOLES.
3. GUSSET PLATE POSITION DIMENSIONS ARE AS SHOWN ON THE DRAWING; FOR FURTHER INFORMATION REGARDING GUSSET PLATE POSITIONS & ORIENTATION, REFER TO SPECIFICATION NO. M-74.
4. USE OF GUSSET PLATE I.D. STAMP FOR CORRECT ORIENTATION OF GUSSET PLATES IS FULLY EXPLAINED IN SPECIFICATION NO. M-74.
5. DIMENSIONING: USE "METHOD 1" FROM "BOTTOM OF LEG" OR "METHOD 2" FROM "TOP OF LEG". DO NOT USE BOTH, OR DO NOT MIX BOTH.

REGISTERED PROFESSIONAL ENGINEER
JEFFREY E. GRASSMAN
C 63982
EXP.
CIVIL
STATE OF CALIFORNIA

BILL OF MATERIAL
(SHIPPING SEQ=0 FOR ALL)

VALMONT PART NO.	DESCRIPTION	QTY PER ASSY
YE06228	BAR 4 X 1/4 X 3"	2
YE06227	BAR 4 X 1/4 X 6 1/2"	2
YE06229	BAR 4 X 1/4 X 3"	2
AC51224	PLATE 1 X 10 11/16 DIA	1
AC51355	PLATE 1 X 1-0 5/16 DIA	1
AC50856	PIPE 5 9/16" OD X .258" WALL	1
AC52825	BAR 6 X 1/4 X 0-4 11/16"	1
AC53670	PLATE 1/4 X 1 X 0-2 3/8"	1
AC50698	PLATE 7 GA X 1 3/8 X 0'-3"	16

DUPLICATE DRAWING DISTRIBUTION

TEC PIPE 5 9/16" OD X .258" WALL WLDMNT

DWG SIZE D | CLASS CODE (1) 4 | CLASS NO. (3) 999

DRAWN	ENGR	DATE	SCALE
RJS		01/05/10	NONE

P.A. CHK | SHOP CHK

OTHER SPECIFICATIONS
F-1, M-58, M-68, M-74, W-54

MATERIAL	THICKNESS	WEIGHT
		362#

REV ID	DATE	REV BY	CHK BY	REVISION DESCRIPTION

ORDER NO. 13075-09 | CUSTOMER MOTOROLA | DESCRIPTION E-SECTION LEG WELDMENT | DWG NO. YE06224

VALMONT MICROFLECT

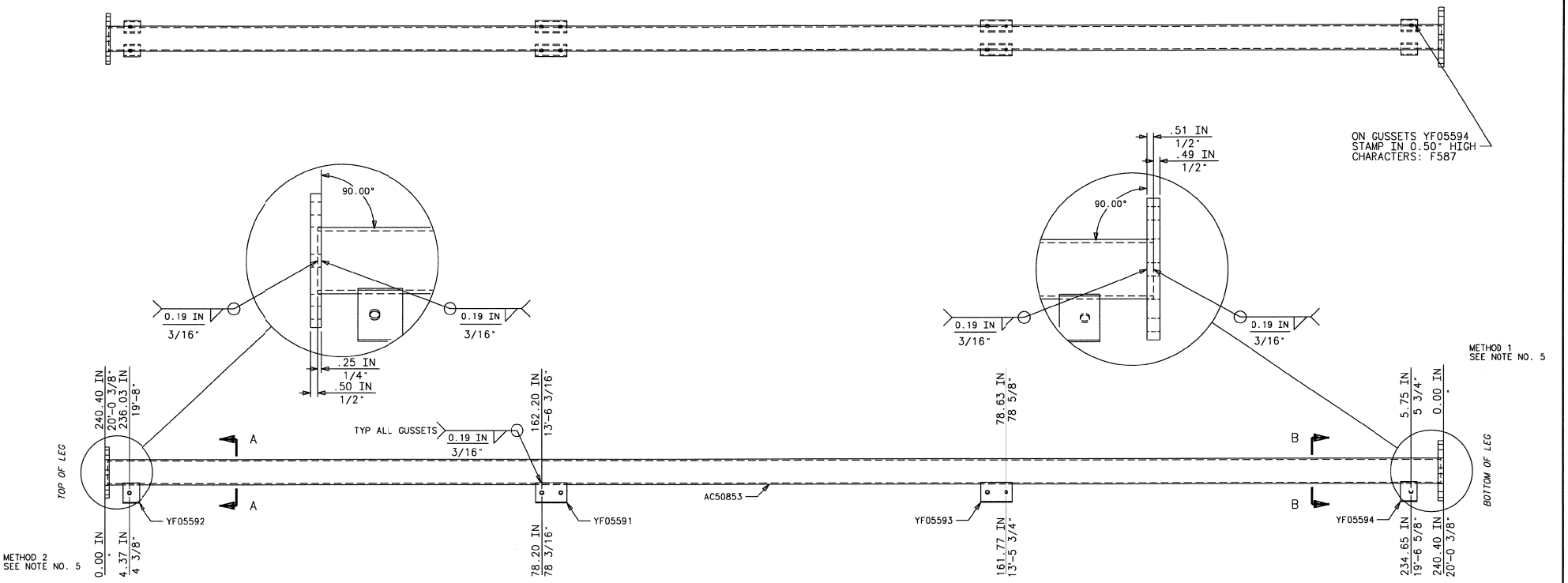

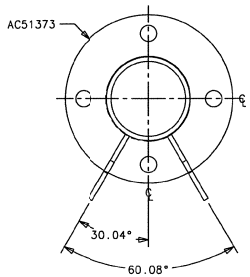

SECTION A–A

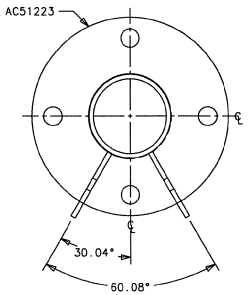

SECTION B–B

NOTES:

1. ALL GUSSET PLATES HAVE 0.69 IN DIA HOLES.
2. TOP FLANGE HAS 0.88 IN DIA HOLES & BOTTOM FLANGE HAS 1.00 IN DIA HOLES.
3. GUSSET PLATE POSITION DIMENSIONS ARE AS SHOWN ON THE DRAWING. FOR FURTHER INFORMATION REGARDING GUSSET PLATE POSITIONS & ORIENTATION, REFER TO SPECIFICATION NO. M-74.
4. USE OF GUSSET PLATE I.D. STAMP FOR CORRECT ORIENTATION OF GUSSET PLATES IS FULLY EXPLAINED IN SPECIFICATION NO. M-74.
5. DIMENSIONING: USE "METHOD 1" FROM "BOTTOM OF LEG" OR "METHOD 2" FROM "TOP OF LEG". DO NOT USE BOTH, OR DO NOT MIX BOTH.

REGISTERED PROFESSIONAL ENGINEER
JEFFREY E. GRASSMAN
C 63982
EXP.
CIVIL
STATE OF CALIFORNIA

BILL OF MATERIAL
(SHIPPING SEQ=0 FOR ALL)

VALMONT PART NO.	DESCRIPTION	QTY PER ASSY
YF05592	BAR 4 X 1/4 X 3"	2
YF05591	BAR 4 X 1/4 X 5 11/16"	2
YF05593	BAR 4 X 1/4 X 5 3/4"	2
YF05594	BAR 4 X 1/4 X 3"	2
AC51373	PLATE 3/4 X 9 1/16 DIA	1
AC51223	PLATE 1 X 10 11/16 DIA	1
AC50853	PIPE 4 1/2" OD X .237" WALL	1

DUPLICATE DRAWING DISTRIBUTION

TEC PIPE 4 1/2" OD X .237" WALL WELDMENT

DWG SIZE D | CLASS CODE (1) 4 | CLASS NO. (3) 999

DRAWN	ENGR	DATE	SCALE
RJS		01/05/10	NONE

P.A. CHK | SHOP CHK

OTHER SPECIFICATIONS
F-1, M-58, M-68, M-74, W-54

MATERIAL	THICKNESS	WEIGHT
		264#

REV ID	DATE	REV BY	CHK BY	REVISION DESCRIPTION

ORDER NO. 13075-09 | CUSTOMER MOTOROLA | DESCRIPTION F-SECTION LEG WELDMENT | DWG NO. YF05587

VALMONT MICROFLECT

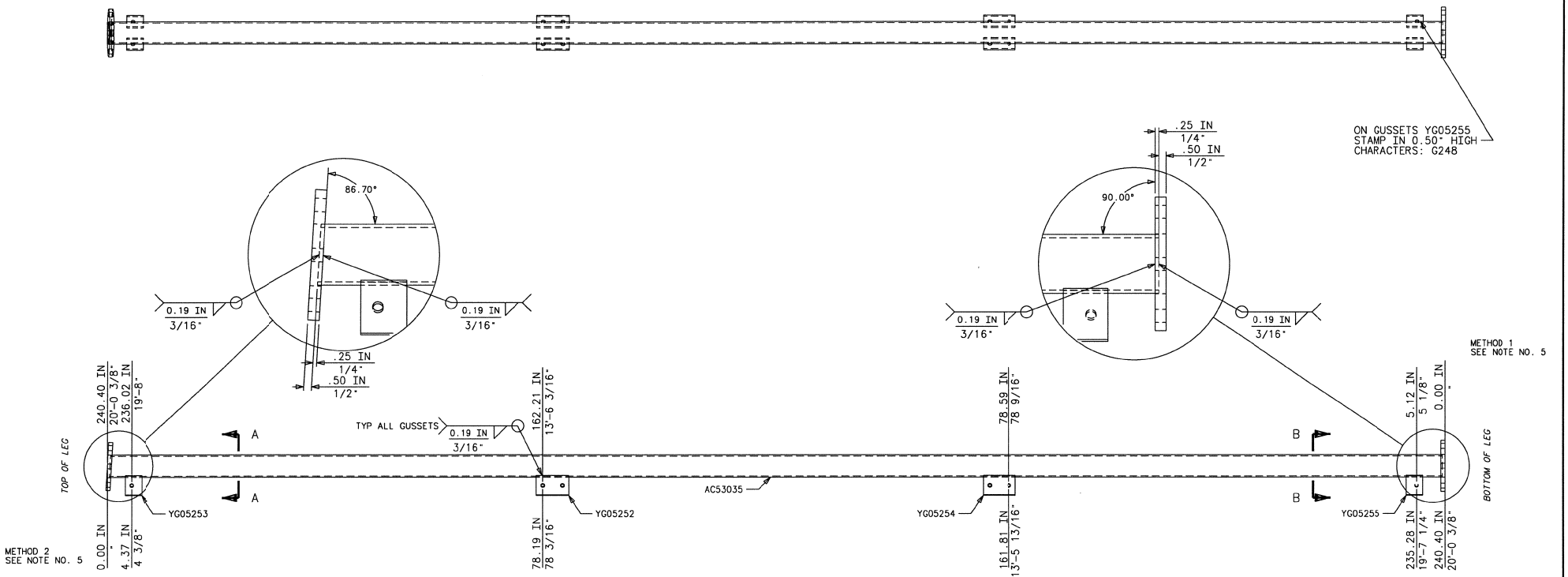

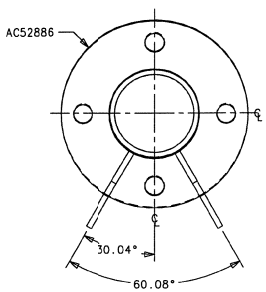

SECTION A–A

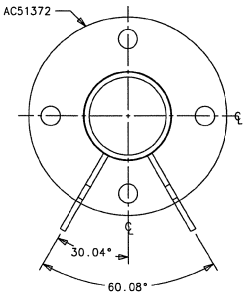

SECTION B–B

NOTES:

1. ALL GUSSET PLATES HAVE 0.69 IN DIA HOLES.
2. TOP FLANGE HAS 0.75 IN DIA HOLES & BOTTOM FLANGE HAS 0.88 IN DIA HOLES.
3. GUSSET PLATE POSITION DIMENSIONS ARE AS SHOWN ON THE DRAWING. FOR FURTHER INFORMATION REGARDING GUSSET PLATE POSITIONS & ORIENTATION, REFER TO SPECIFICATION NO. M-74.
4. USE OF GUSSET PLATE I.D. STAMP FOR CORRECT ORIENTATION OF GUSSET PLATES IS FULLY EXPLAINED IN SPECIFICATION NO. M-74.
5. DIMENSIONING: USE "METHOD 1" FROM "BOTTOM OF LEG" OR "METHOD 2" FROM "TOP OF LEG". DO NOT USE BOTH, OR DO NOT MIX BOTH.

REGISTERED PROFESSIONAL ENGINEER
JEFFREY E. GRASSMAN
C 63982
EXP.
CIVIL
STATE OF CALIFORNIA

BILL OF MATERIAL
(SHIPPING SEQ=0 FOR ALL)

VALMONT PART NO.	DESCRIPTION	QTY PER ASSY
YG05253	BAR 4 X 1/4 X 3"	2
YG05252	BAR 4 X 1/4 X 5 7/8"	2
YG05254	BAR 4 X 1/4 X 5 3/4"	2
YG05255	BAR 4 X 1/4 X 3"	2
AC52886	PLATE 3/4 X 8 3/8 DIA	1
AC51372	PLATE 3/4 X 9 1/16 DIA	1
AC53035	PIPE 4" OD X .226" WALL	1

DUPLICATE DRAWING DISTRIBUTION

TEC PIPE 4" OD X .226" WALL WELDMENT

DWG SIZE D CLASS CODE (1) 4 CLASS NO. (3) 999

REV ID	DATE	REV BY	CHK BY	REVISION DESCRIPTION

DRAWN RJS | ENGR | DATE 01/05/10 | SCALE NONE
P.A. CHK | SHOP CHK
OTHER SPECIFICATIONS F-1,M-58,M-68,M-74,W-54
MATERIAL | THICKNESS | WEIGHT 217#

ORDER NO. 13075-09 | CUSTOMER MOTOROLA | DESCRIPTION G-SECTION LEG WELDMENT | DWG NO. YG05248

VALMONT MICROFLECT

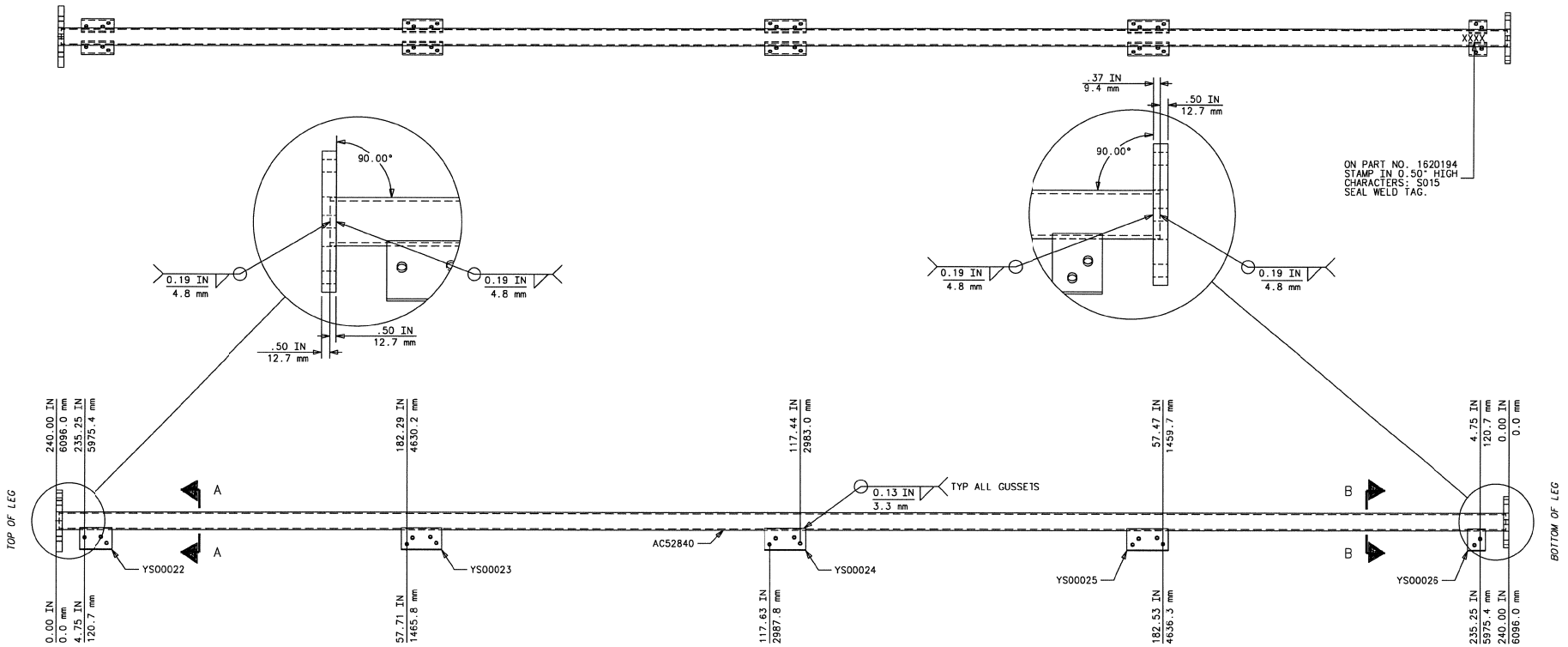

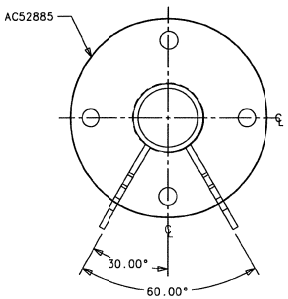

SECTION A–A

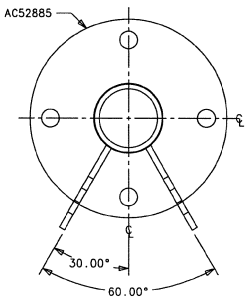

SECTION B–B

NOTES:

1. ALL GUSSET PLATES HAVE 0.56 IN DIA HOLES.
2. TOP FLANGE HAS 0.75 IN DIA HOLES & BOTTOM FLANGE HAS 0.75 IN DIA HOLES.
3. GUSSET PLATE POSITION DIMENSIONS ARE AS SHOWN ON THE DRAWING: FOR FURTHER INFORMATION REGARDING GUSSET PLATE POSITIONS & ORIENTATION, REFER TO SPECIFICATION NO. M-74.
4. USE OF GUSSET PLATE I.D. STAMP FOR CORRECT ORIENTATION OF GUSSET PLATES IS FULLY EXPLAINED IN SPECIFICATION NO. M-74.

REGISTERED PROFESSIONAL ENGINEER
JEFFREY E. GRASSMAN
C 63982
EXP.
CIVIL
STATE OF CALIFORNIA

BILL OF MATERIAL
(SHIPPING SEQ=0 FOR ALL)

VALMONT PART NO.	DESCRIPTION	QTY PER ASSY
YS00022	BAR 4 X 1/4 X 5 5/8"	2
YS00023	BAR 4 X 1/4 X 6 5/8"	2
YS00024	BAR 4 X 1/4 X 6 11/16"	2
YS00025	BAR 4 X 1/4 X 6 3/4"	2
YS00026	BAR 4 X 1/4 X 3"	2
AC52885	PLATE 7/8 X 8 3/8 DIA	2
AC52840	PIPE 2 7/8" OD X .203" WALL	1
1620194	ID TAG	1

DUPLICATE DRAWING DISTRIBUTION

TEC PIPE 2 7/8" OD X .203" WALL WELDMENT

DWG SIZE D | CLASS CODE (1) 4 | CLASS NO. (3) 999

DRAWN	ENGR	DATE	SCALE
MJV		03/31/99	NONE

P.A. CHK | SHOP CHK

OTHER SPECIFICATIONS: F-1, M-58, M-68, M-74, W-54

MATERIAL	THICKNESS	WEIGHT
		157#

REV ID	DATE	REV BY	CHK BY	REVISION DESCRIPTION
A	08/23/07	RJS	MF	DWG REDRAWN

ORDER NO. | CUSTOMER: MODULAR DESIGN TOWER | DESCRIPTION: S-SECTION LEG WELDMENT | DWG NO. YS000151

VALMONT MICROFLECT

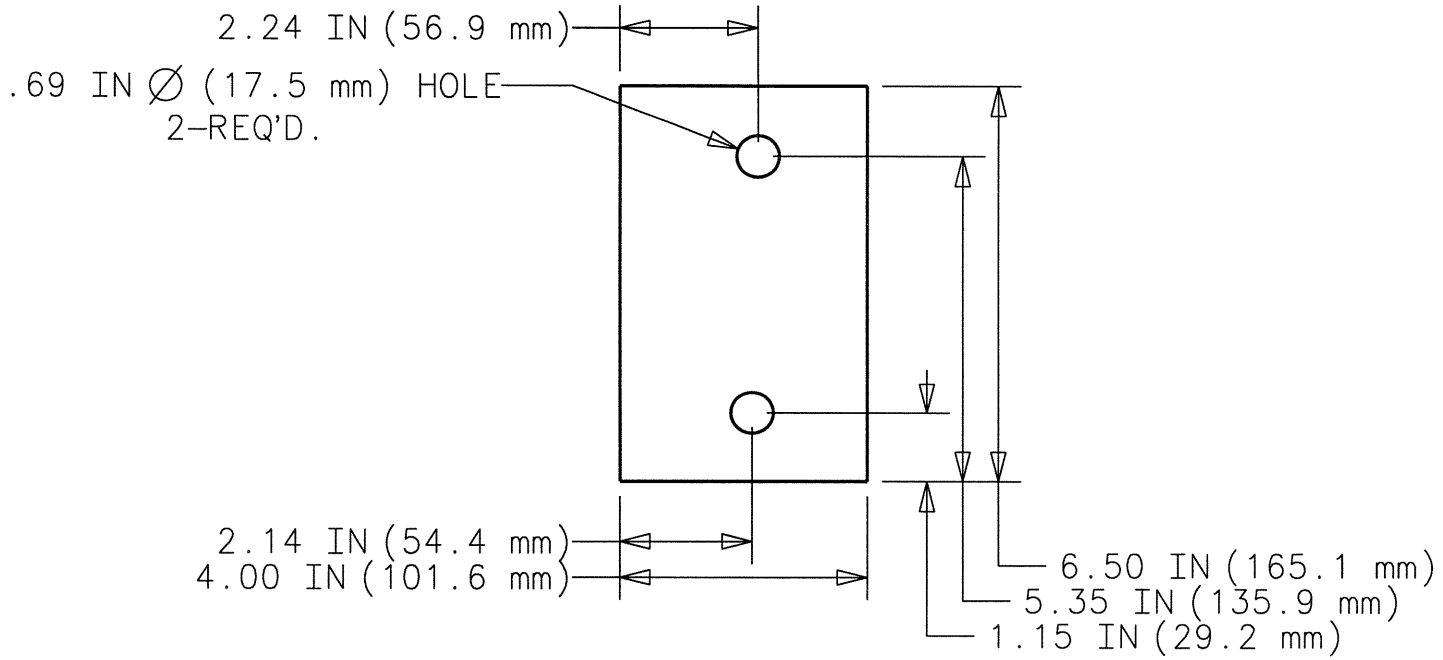

REGISTERED PROFESSIONAL ENGINEER
JEFFREY E. GRASSMAN
C 63982
EXP. 9/30/24
CIVIL
STATE OF CALIFORNIA

DUPLICATE DRAWING DISTRIBUTION

TEC BAR 4 X 3/8 X 6 1/2"

DWG SIZE A CLASS CODE (1) 4 CLASS NO. (3) 999

REV ID	DATE	REV BY	CHK BY	REVISION DESCRIPTION

DRAWN	ENGR	DATE	SCALE
RJS		01/05/10	NONE

P.A. CHK	SHOP CHK

OTHER SPECIFICATIONS
M-58, M-68

MATERIAL	THICKNESS	WEIGHT
S165	0.375 IN	3#

VALMONT MICROFLECT

ORDER NO.	CUSTOMER	DESCRIPTION	DWG NO.
13075-09	MOTOROLA	GUSSET	YA07866

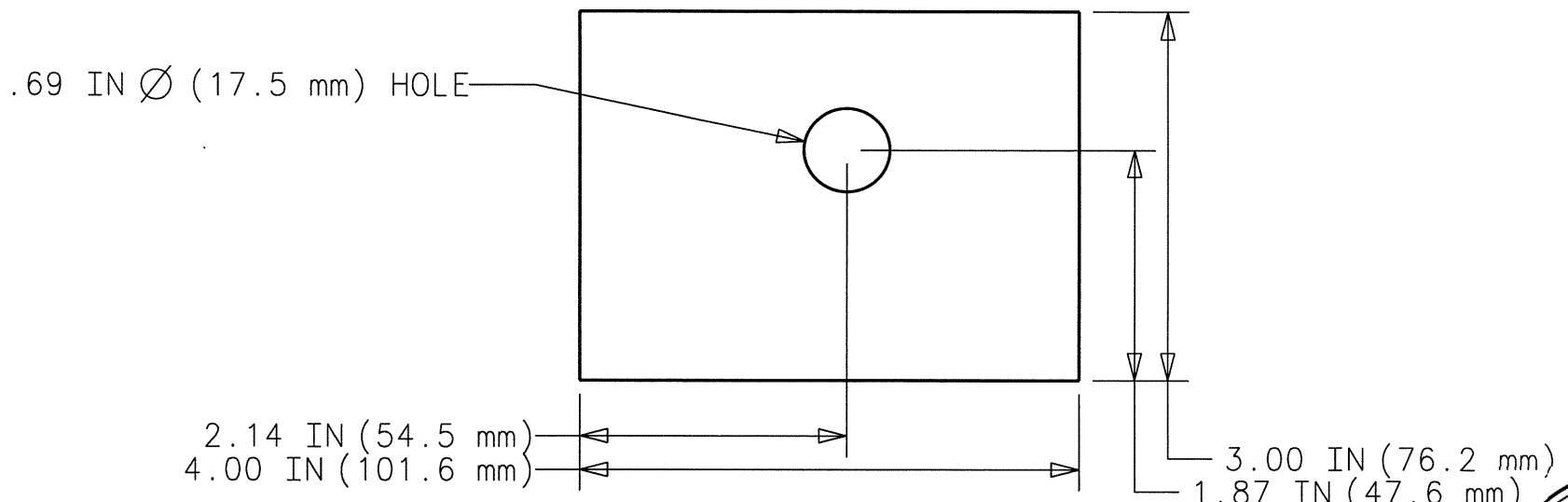

REGISTERED PROFESSIONAL ENGINEER
JEFFREY E. GRASSMAN
C 63982
EXP. _____
CIVIL
STATE OF CALIFORNIA

DUPLICATE DRAWING DISTRIBUTION

TEC BAR 4 X 3/8 X 3"

DWG SIZE A CLASS CODE (1) 4 CLASS NO. (3) 999

REV ID	DATE	REV BY	CHK BY	REVISION DESCRIPTION

DRAWN	ENGR	DATE	SCALE
RJS		01/05/10	NONE

P.A. CHK	SHOP CHK

OTHER SPECIFICATIONS
M-58, M-68

MATERIAL	THICKNESS	WEIGHT
S165	0.375 IN	2#

VALMONT MICROFLECT

ORDER NO.	CUSTOMER	DESCRIPTION	DWG NO.
13075-09	MOTOROLA	GUSSET	YA07867

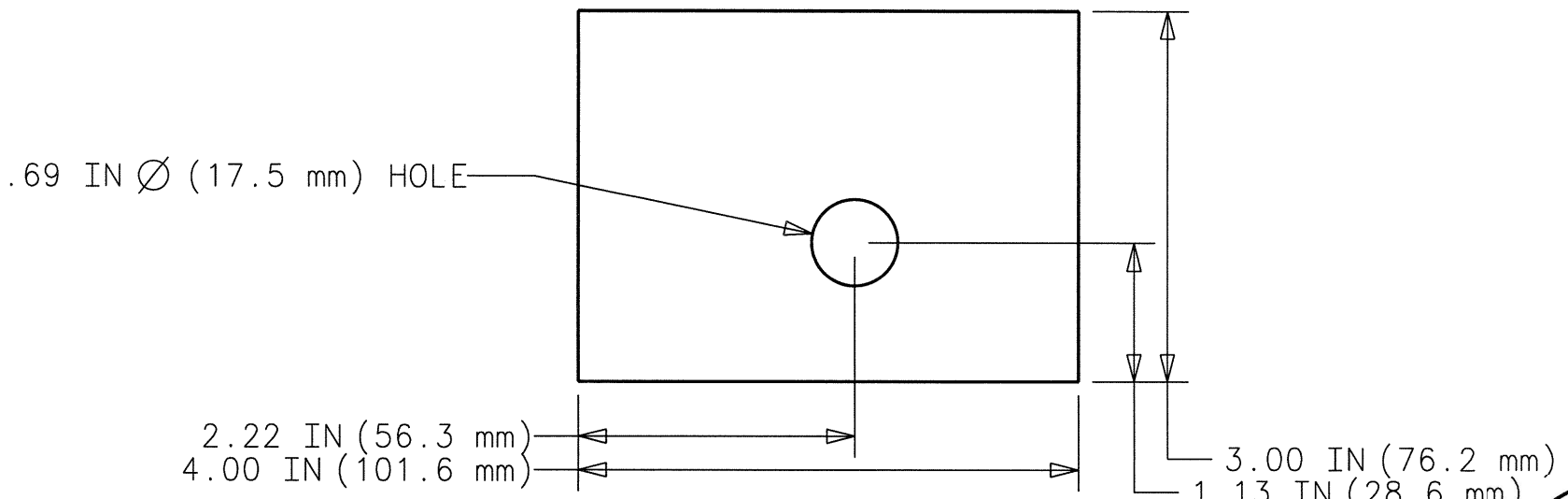

REGISTERED PROFESSIONAL ENGINEER
JEFFREY E. GRASSMAN
C 63982
EXP. _____
CIVIL
STATE OF CALIFORNIA

DUPLICATE DRAWING DISTRIBUTION

TEC BAR 4 X 3/8 X 3"

DWG SIZE A CLASS CODE (1) 4 CLASS NO. (3) 999

REV ID	DATE	REV BY	CHK BY	REVISION DESCRIPTION

DRAWN	ENGR	DATE	SCALE
RJS		01/05/10	NONE

P.A. CHK	SHOP CHK

OTHER SPECIFICATIONS
M-58, M-68

MATERIAL	THICKNESS	WEIGHT
S165	0.375 IN	2#

VALMONT MICROFLECT

ORDER NO.	CUSTOMER	DESCRIPTION	DWG NO.
13075-09	MOTOROLA	GUSSET	YA07868

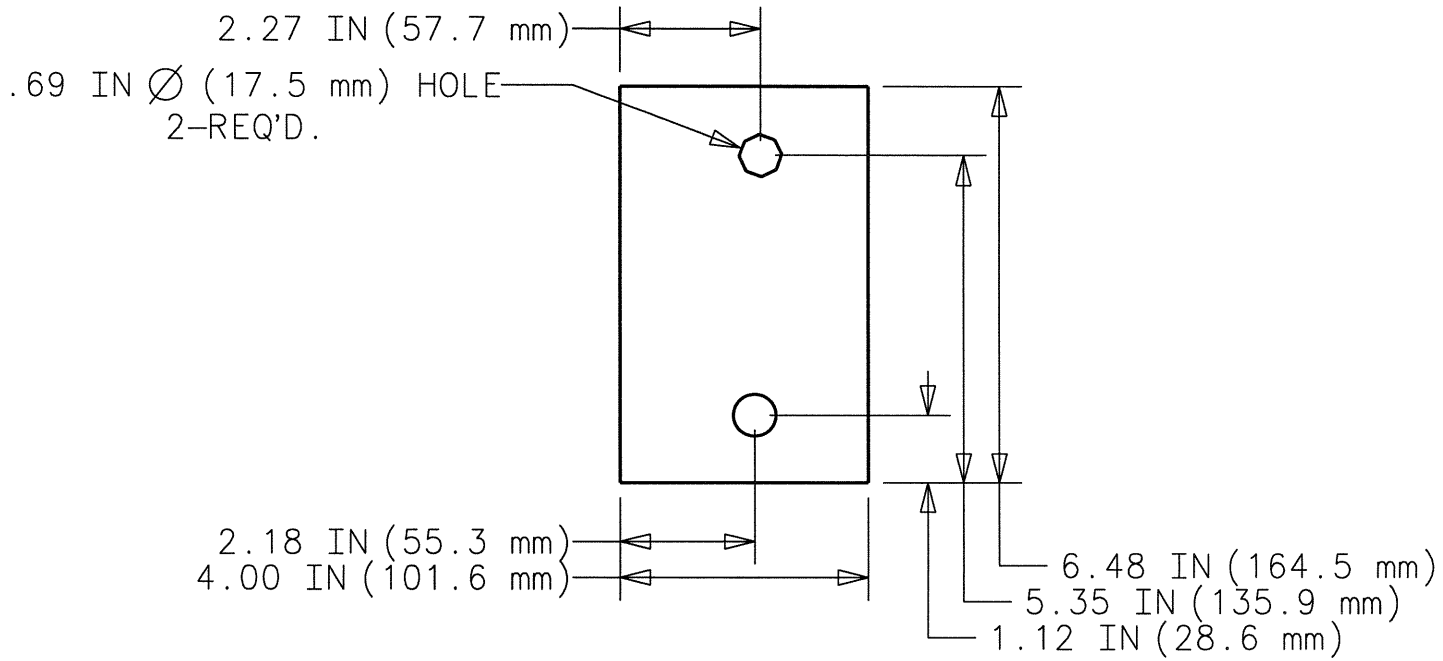

REGISTERED PROFESSIONAL ENGINEER
JEFFREY E. GRASSMAN
C 63982
EXP.
CIVIL
STATE OF CALIFORNIA

DUPLICATE DRAWING DISTRIBUTION

TEC BAR 4 X 3/8 X 6 1/2"

DWG SIZE A CLASS CODE (1) 4 CLASS NO. (3) 999

REV ID	DATE	REV BY	CHK BY	REVISION DESCRIPTION

DRAWN	ENGR	DATE	SCALE
RJS		01/05/10	NONE

P.A. CHK	SHOP CHK

OTHER SPECIFICATIONS
M-58, M-68

MATERIAL	THICKNESS	WEIGHT
S165	0.375 IN	3#

VALMONT MICROFLECT

ORDER NO.	CUSTOMER	DESCRIPTION	DWG NO.
13075-09	MOTOROLA	GUSSET	YB07577

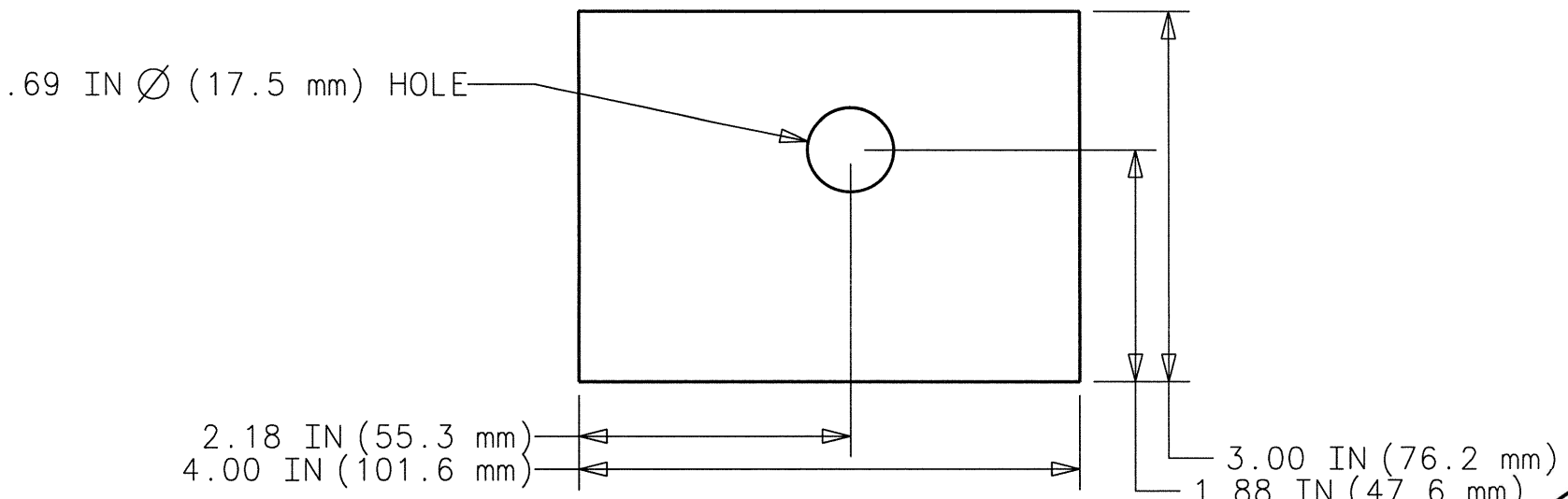

REGISTERED PROFESSIONAL ENGINEER
JEFFREY E. GRASSMAN
C 63982
EXP.
CIVIL
STATE OF CALIFORNIA

DUPLICATE DRAWING DISTRIBUTION

TEC BAR 4 X 3/8 X 3"

DWG SIZE A CLASS CODE (1) 4 CLASS NO. (3) 999

REV ID	DATE	REV BY	CHK BY	REVISION DESCRIPTION

DRAWN	ENGR	DATE	SCALE
RJS		01/05/10	NONE

P.A. CHK	SHOP CHK

OTHER SPECIFICATIONS
M-58, M-68

MATERIAL	THICKNESS	WEIGHT
S165	0.375 IN	2#

VALMONT MICROFLECT

ORDER NO.	CUSTOMER	DESCRIPTION	DWG NO.
13075-09	MOTOROLA	GUSSET	YB07578

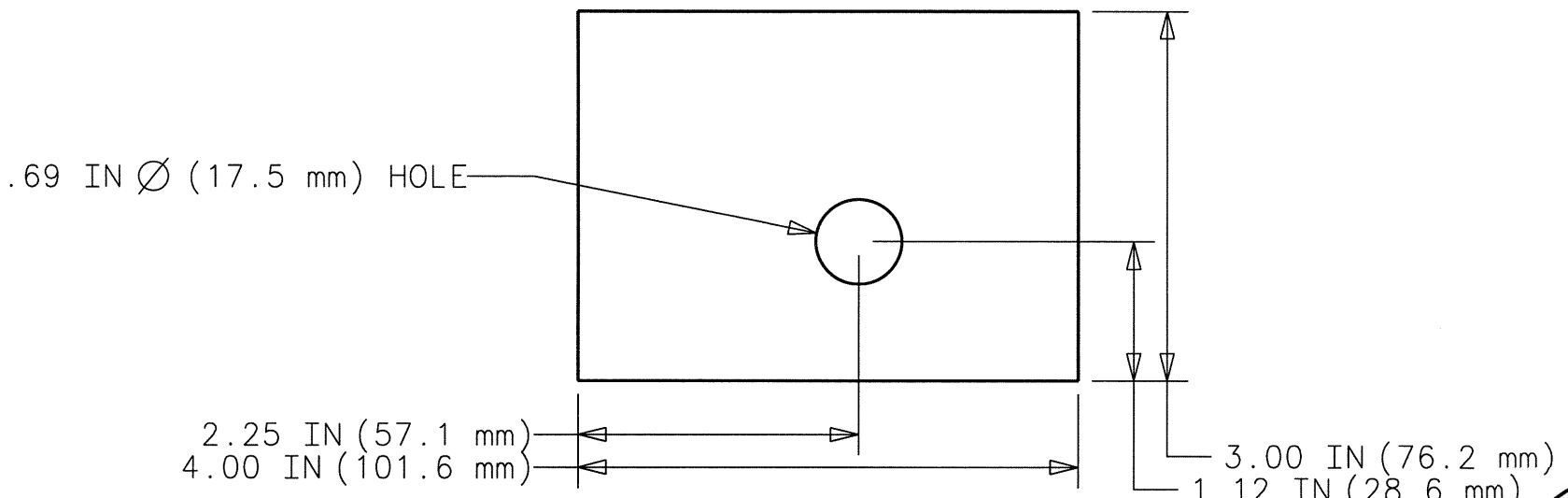

REGISTERED PROFESSIONAL ENGINEER
JEFFREY E. GRASSMAN
C 63982
EXP. _____
CIVIL
STATE OF CALIFORNIA

DUPLICATE DRAWING DISTRIBUTION

TEC BAR 4 X 3/8 X 3"

DWG SIZE A CLASS CODE (1) 4 CLASS NO. (3) 999

REV ID	DATE	REV BY	CHK BY	REVISION DESCRIPTION

DRAWN	ENGR	DATE	SCALE
RJS		01/05/10	NONE

P.A. CHK	SHOP CHK

OTHER SPECIFICATIONS
M-58, M-68

MATERIAL	THICKNESS	WEIGHT
S165	0.375 IN	2#

VALMONT MICROFLECT

ORDER NO.	CUSTOMER	DESCRIPTION	DWG NO.
13075-09	MOTOROLA	GUSSET	YB07579

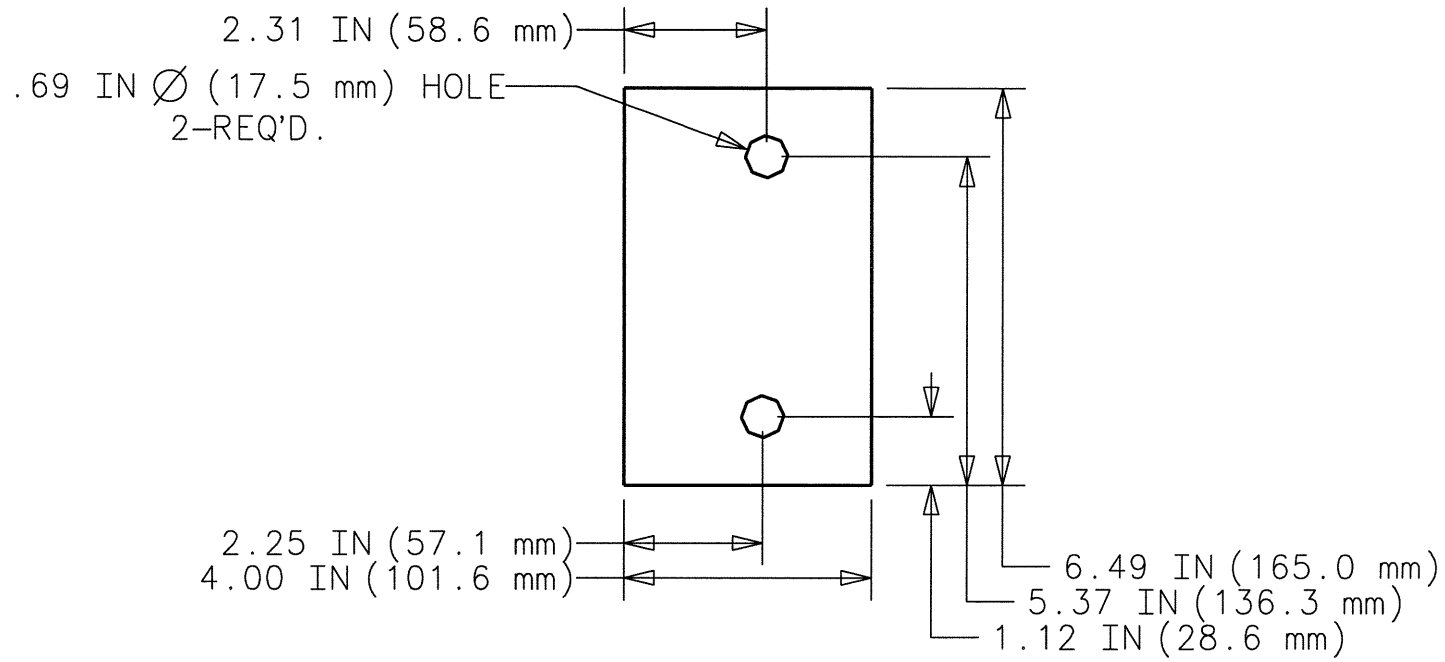

REGISTERED PROFESSIONAL ENGINEER
JEFFREY E. GRASSMAN
C 63982
EXP.
CIVIL
STATE OF CALIFORNIA

DUPLICATE DRAWING DISTRIBUTION

TEC BAR 4 X 3/8 X 6 1/2"

DWG SIZE A CLASS CODE (1) 4 CLASS NO. (3) 999

REV ID	DATE	REV BY	CHK BY	REVISION DESCRIPTION

DRAWN	ENGR	DATE	SCALE
RJS		01/05/10	NONE

P.A. CHK	SHOP CHK

OTHER SPECIFICATIONS
M-58, M-68

MATERIAL	THICKNESS	WEIGHT
S165	0.375 IN	3#

VALMONT MICROFLECT

ORDER NO.	CUSTOMER	DESCRIPTION	DWG NO.
13075-09	MOTOROLA	GUSSET	YC07173

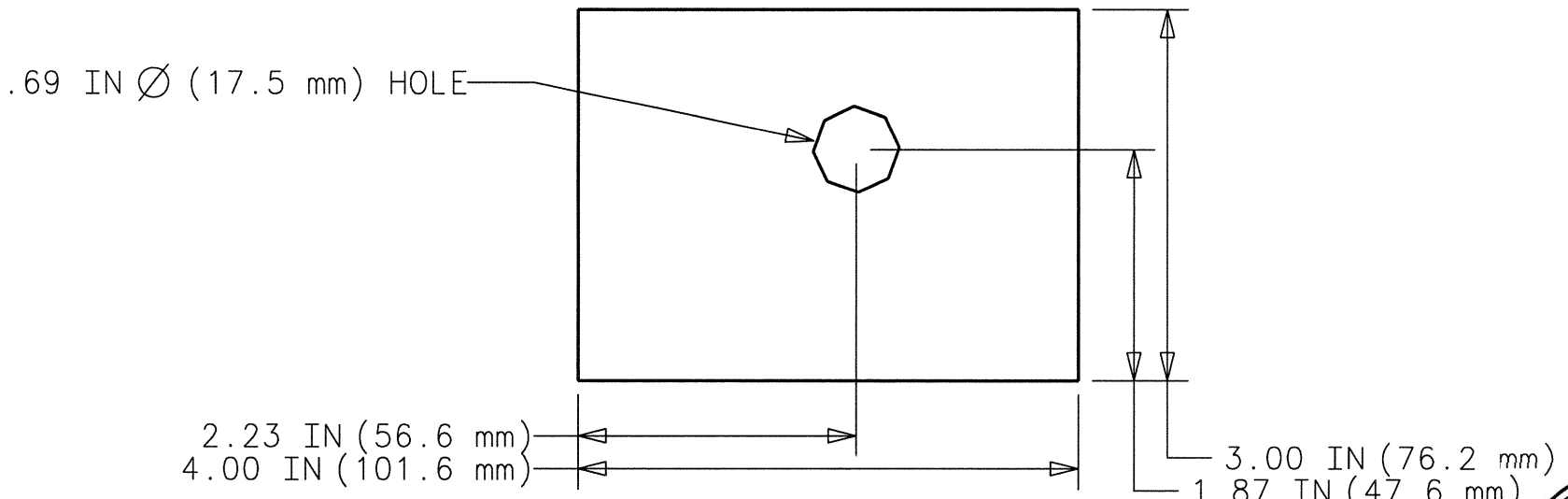

REGISTERED PROFESSIONAL ENGINEER
JEFFREY E. GRASSMAN
C 63982
EXP.
CIVIL
STATE OF CALIFORNIA

DUPLICATE DRAWING DISTRIBUTION

TEC BAR 4 X 3/8 X 3"

DWG SIZE A CLASS CODE (1) 4 CLASS NO. (3) 999

REV ID	DATE	REV BY	CHK BY	REVISION DESCRIPTION

DRAWN	ENGR	DATE	SCALE
RJS		01/05/10	NONE

P.A. CHK	SHOP CHK

OTHER SPECIFICATIONS
M-58, M-68

MATERIAL	THICKNESS	WEIGHT
S165	0.375 IN	2#

VALMONT MICROFLECT

ORDER NO.	CUSTOMER	DESCRIPTION	DWG NO.
13075-09	MOTOROLA	GUSSET	YC07174

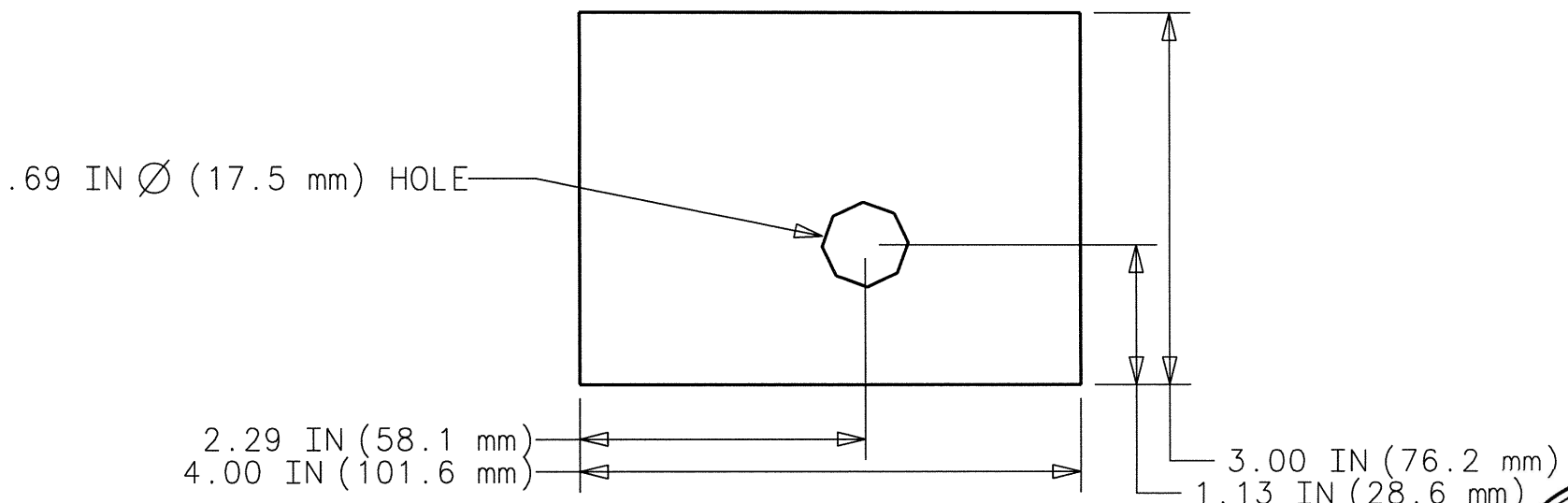

REGISTERED PROFESSIONAL ENGINEER
JEFFREY E. GRASSMAN
C 63982
EXP. _____
CIVIL
STATE OF CALIFORNIA

DUPLICATE DRAWING DISTRIBUTION

TEC BAR 4 X 3/8 X 3"

DWG SIZE A CLASS CODE (1) 4 CLASS NO. (3) 999

REV ID	DATE	REV BY	CHK BY	REVISION DESCRIPTION

DRAWN	ENGR	DATE	SCALE
RJS		01/05/10	NONE

P.A. CHK	SHOP CHK

OTHER SPECIFICATIONS
M-58, M-68

MATERIAL	THICKNESS	WEIGHT
S165	0.375 IN	2#

VALMONT MICROFLECT

ORDER NO.	CUSTOMER	DESCRIPTION	DWG NO.
13075-09	MOTOROLA	GUSSET	YC07175

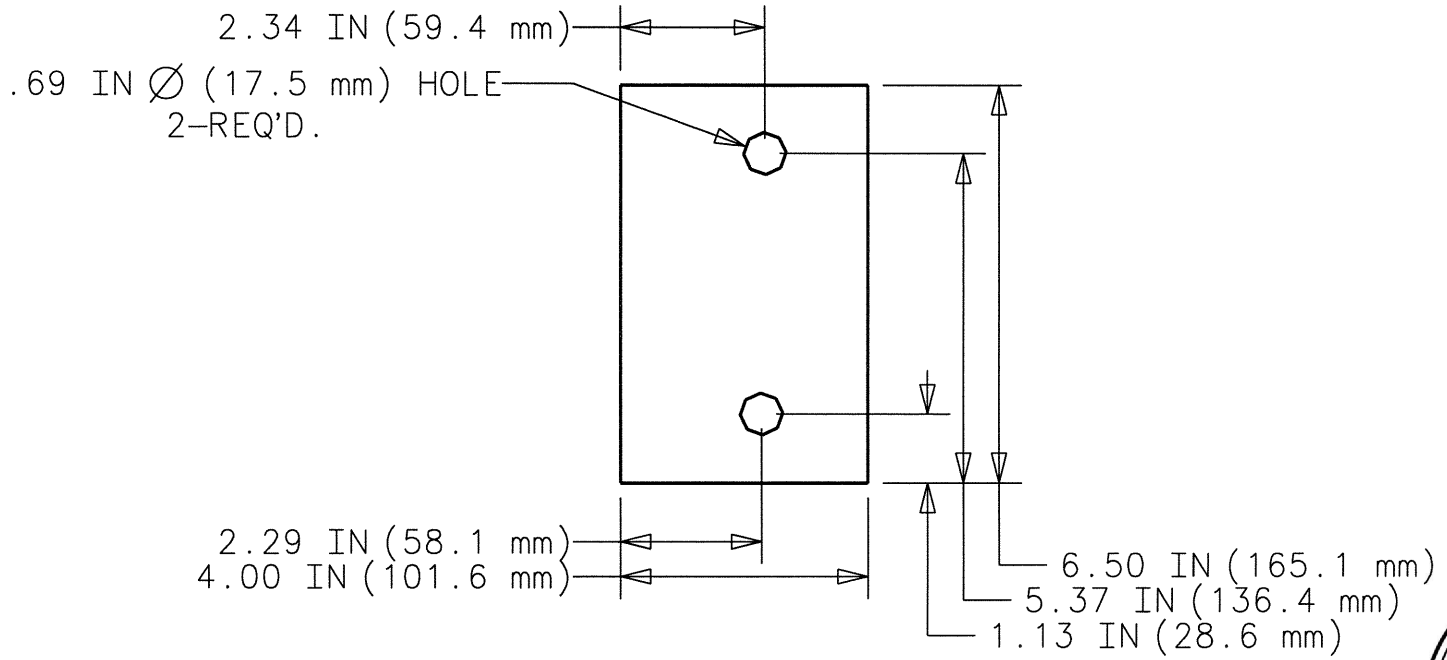

REGISTERED PROFESSIONAL ENGINEER
JEFFREY E. GRASSMAN
C 63982
EXP.
CIVIL
STATE OF CALIFORNIA

DUPLICATE DRAWING DISTRIBUTION

TEC BAR 4 X 3/8 X 6 1/2"

DWG SIZE A CLASS CODE (1) 4 CLASS NO. (3) 999

REV ID	DATE	REV BY	CHK BY	REVISION DESCRIPTION

DRAWN	ENGR	DATE	SCALE
RJS		01/05/10	NONE

P.A. CHK	SHOP CHK

OTHER SPECIFICATIONS
M-58, M-68

MATERIAL	THICKNESS	WEIGHT
S165	0.375 IN	3#

VALMONT MICROFLECT

ORDER NO.	CUSTOMER	DESCRIPTION	DWG NO.
13075-09	MOTOROLA	GUSSET	YD06476

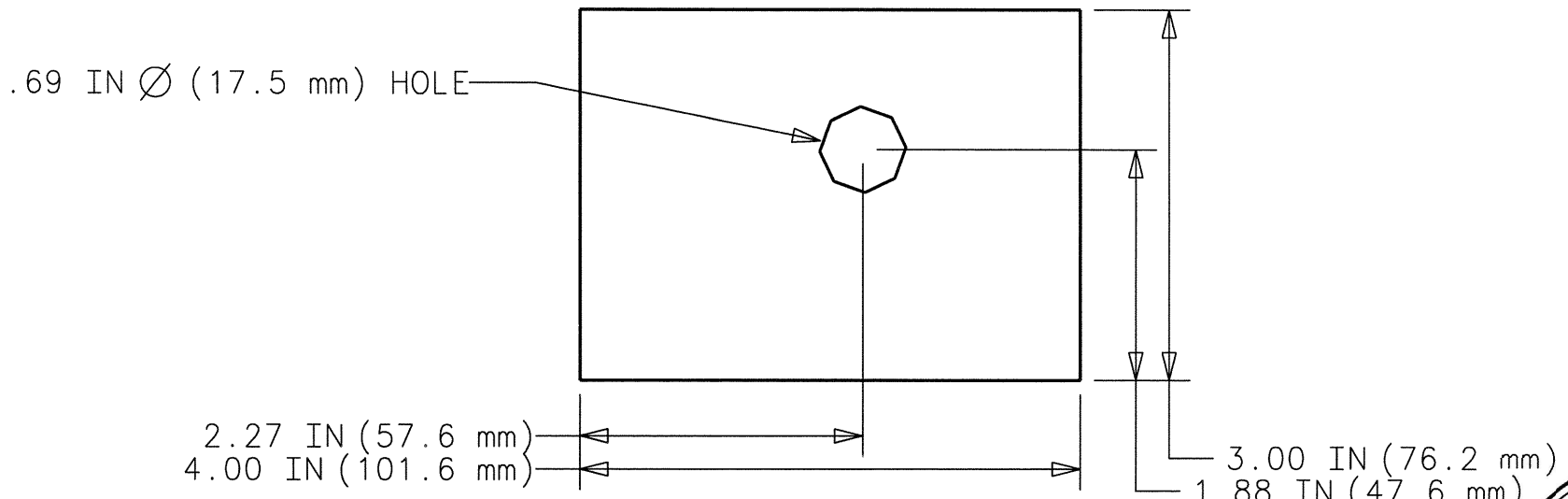

REGISTERED PROFESSIONAL ENGINEER
JEFFREY E. GRASSMAN
C 63982
EXP.
CIVIL
STATE OF CALIFORNIA

DUPLICATE DRAWING DISTRIBUTION

TEC BAR 4 X 3/8 X 3"

DWG SIZE A CLASS CODE (1) 4 CLASS NO. (3) 999

REV ID	DATE	REV BY	CHK BY	REVISION DESCRIPTION

DRAWN	ENGR	DATE	SCALE
RJS		01/05/10	NONE

P.A. CHK	SHOP CHK

OTHER SPECIFICATIONS
M-58, M-68

MATERIAL	THICKNESS	WEIGHT
S165	0.375 IN	2#

VALMONT MICROFLECT

ORDER NO.	CUSTOMER	DESCRIPTION	DWG NO.
13075-09	MOTOROLA	GUSSET	YD06477

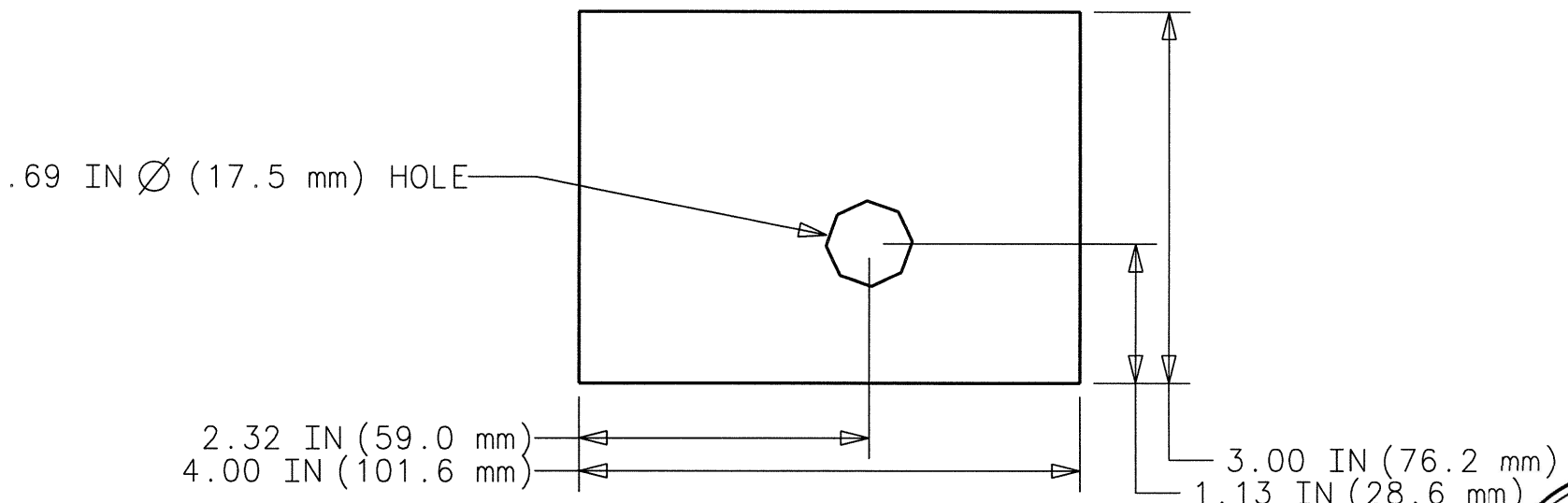

REGISTERED PROFESSIONAL ENGINEER
JEFFREY E. GRASSMAN
C 63982
EXP.
CIVIL
STATE OF CALIFORNIA

DUPLICATE DRAWING DISTRIBUTION

TEC BAR 4 X 3/8 X 3"

DWG SIZE A CLASS CODE (1) 4 CLASS NO. (3) 999

REV ID	DATE	REV BY	CHK BY	REVISION DESCRIPTION

DRAWN	ENGR	DATE	SCALE
RJS		01/05/10	NONE

P.A. CHK	SHOP CHK

OTHER SPECIFICATIONS
M-58, M-68

MATERIAL	THICKNESS	WEIGHT
S165	0.375 IN	2#

VALMONT MICROFLECT

ORDER NO.	CUSTOMER	DESCRIPTION	DWG NO.
13075-09	MOTOROLA	GUSSET	YD06478

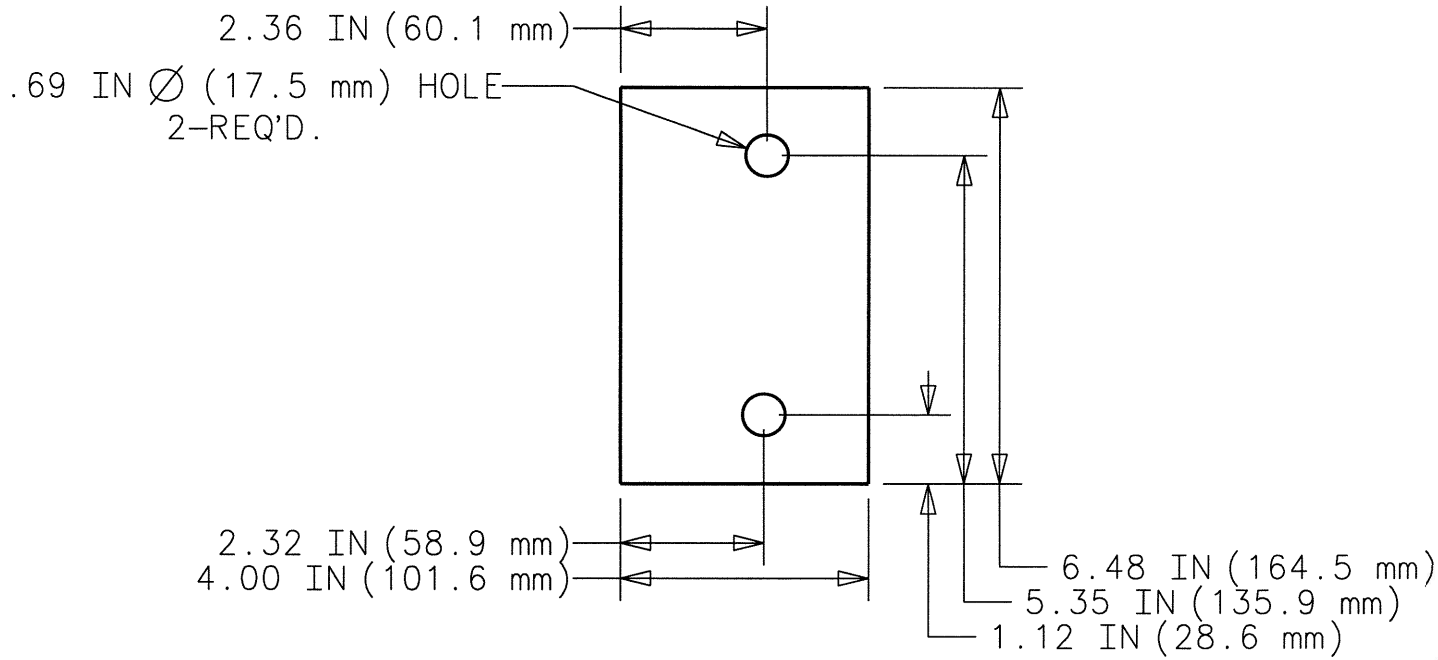

REGISTERED PROFESSIONAL ENGINEER
JEFFREY E. GRASSMAN
C 63982
EXP.
CIVIL
STATE OF CALIFORNIA

DUPLICATE DRAWING DISTRIBUTION

TEC BAR 4 X 1/4 X 6 1/2"

DWG SIZE A CLASS CODE (1) 4 CLASS NO. (3) 999

REV ID	DATE	REV BY	CHK BY	REVISION DESCRIPTION

DRAWN	ENGR	DATE	SCALE
RJS		01/05/10	NONE

P.A. CHK	SHOP CHK

OTHER SPECIFICATIONS
M-58, M-68

MATERIAL	THICKNESS	WEIGHT
S165	0.250 IN	2#

VALMONT MICROFLECT

ORDER NO.	CUSTOMER	DESCRIPTION	DWG NO.
13075-09	MOTOROLA	GUSSET	YE06227

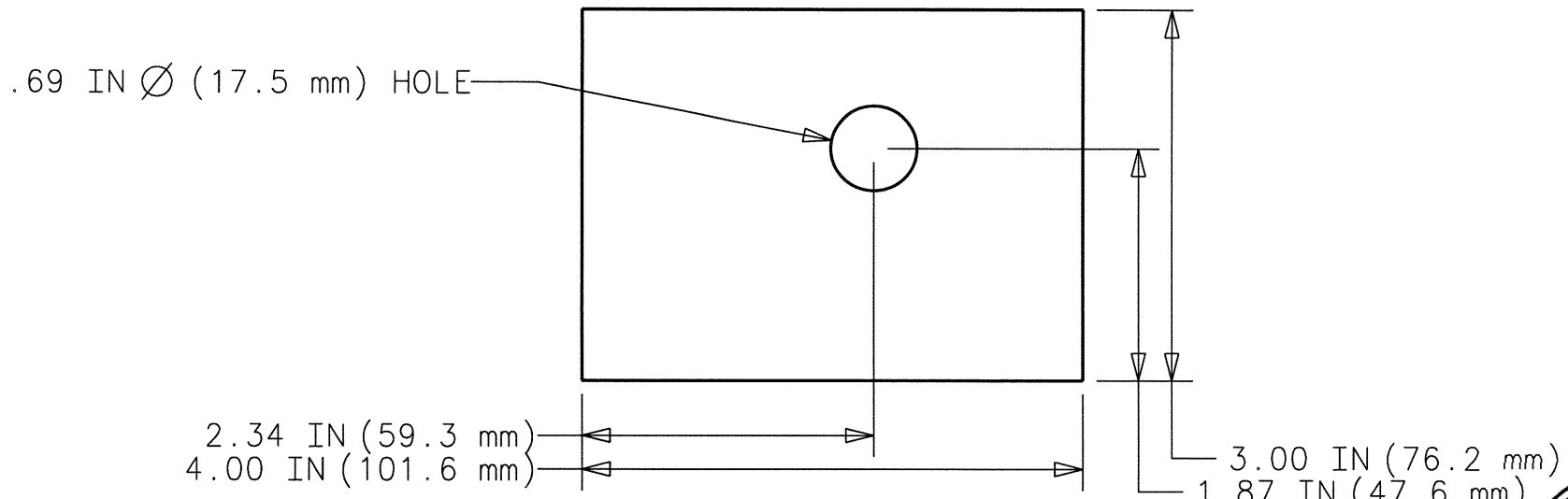

REGISTERED PROFESSIONAL ENGINEER
JEFFREY E. GRASSMAN
C 63982
EXP. _____
CIVIL
STATE OF CALIFORNIA

DUPLICATE DRAWING DISTRIBUTION

TEC BAR 4 X 1/4 X 3"

DWG SIZE A CLASS CODE (1) 4 CLASS NO. (3) 999

REV ID	DATE	REV BY	CHK BY	REVISION DESCRIPTION

DRAWN	ENGR	DATE	SCALE
RJS		01/05/10	NONE

P.A. CHK	SHOP CHK

OTHER SPECIFICATIONS
M-58, M-68

MATERIAL	THICKNESS	WEIGHT
S165	0.250 IN	1#

VALMONT MICROFLECT

ORDER NO.	CUSTOMER	DESCRIPTION	DWG NO.
13075-09	MOTOROLA	GUSSET	YE06228

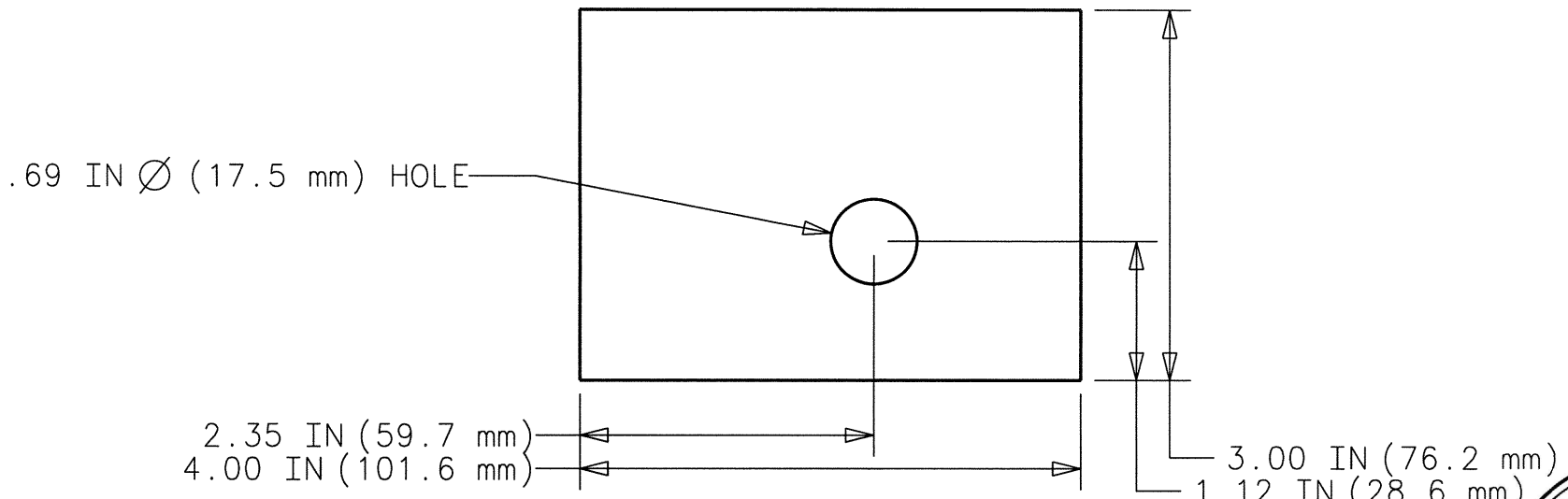

REGISTERED PROFESSIONAL ENGINEER
JEFFREY E. GRASSMAN
C 63982
EXP. _____
CIVIL
STATE OF CALIFORNIA

DUPLICATE DRAWING DISTRIBUTION

TEC BAR 4 X 1/4 X 3"

DWG SIZE A CLASS CODE (1) 4 CLASS NO. (3) 999

REV ID	DATE	REV BY	CHK BY	REVISION DESCRIPTION

DRAWN	ENGR	DATE	SCALE
RJS		01/05/10	NONE

P.A. CHK	SHOP CHK

OTHER SPECIFICATIONS
M-58, M-68

MATERIAL	THICKNESS	WEIGHT
S165	0.250 IN	1#

VALMONT MICROFLECT

ORDER NO.	CUSTOMER	DESCRIPTION	DWG NO.
13075-09	MOTOROLA	GUSSET	YE06229

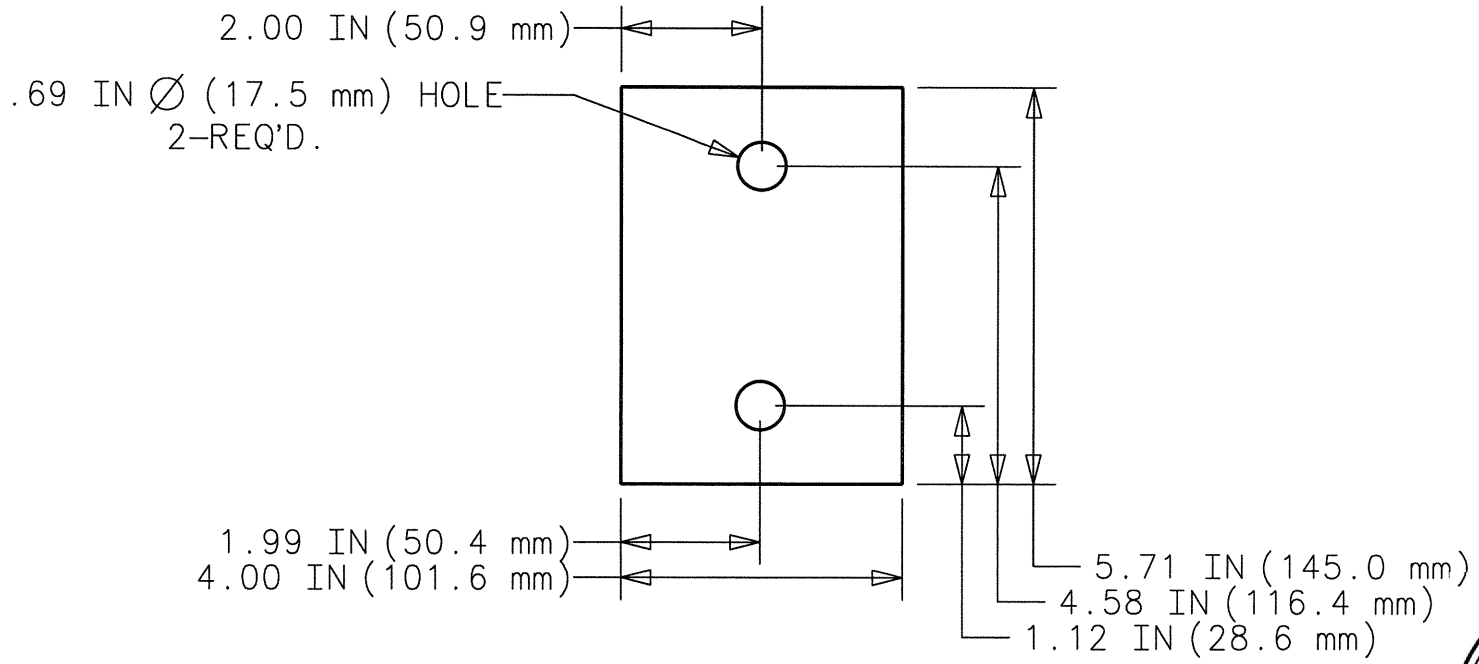

REGISTERED PROFESSIONAL ENGINEER
JEFFREY E. GRASSMAN
C 63982
EXP.
CIVIL
STATE OF CALIFORNIA

DUPLICATE DRAWING DISTRIBUTION

TEC BAR 4 X 1/4 X 5 11/16"

DWG SIZE A CLASS CODE (1) 4 CLASS NO. (3) 999

REV ID	DATE	REV BY	CHK BY	REVISION DESCRIPTION

DRAWN	ENGR	DATE	SCALE
RJS		01/05/10	NONE

P.A. CHK	SHOP CHK

OTHER SPECIFICATIONS
M-58, M-68

MATERIAL	THICKNESS	WEIGHT
S165	0.250 IN	2#

VALMONT MICROFLECT

ORDER NO.	CUSTOMER	DESCRIPTION	DWG NO.
13075-09	MOTOROLA	GUSSET	YF05591

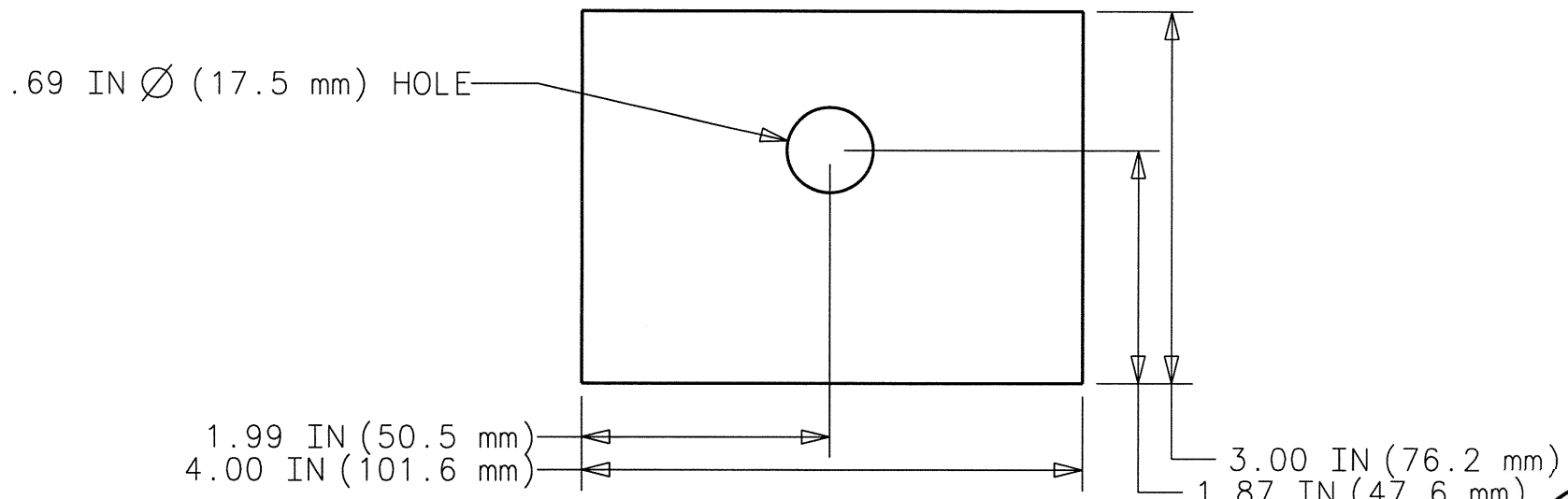

REGISTERED PROFESSIONAL ENGINEER
JEFFREY E. GRASSMAN
C 63982
EXP.
CIVIL
STATE OF CALIFORNIA

DUPLICATE DRAWING DISTRIBUTION

TEC BAR 4 X 1/4 X 3"

DWG SIZE A CLASS CODE (1) 4 CLASS NO. (3) 999

REV ID	DATE	REV BY	CHK BY	REVISION DESCRIPTION

DRAWN	ENGR	DATE	SCALE
RJS		01/05/10	NONE

P.A. CHK	SHOP CHK

OTHER SPECIFICATIONS
M-58, M-68

MATERIAL	THICKNESS	WEIGHT
S165	0.250 IN	1#

VALMONT MICROFLECT

ORDER NO.	CUSTOMER	DESCRIPTION	DWG NO.
13075-09	MOTOROLA	GUSSET	YF05592

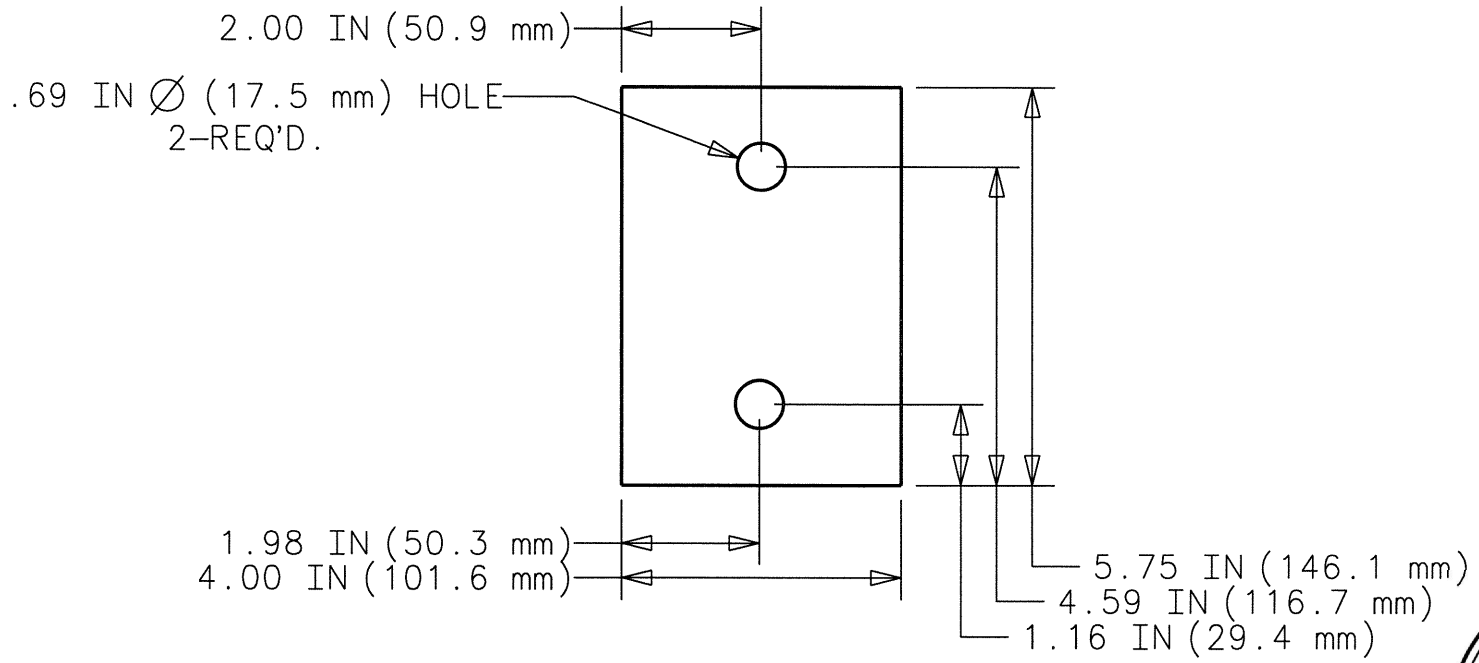

DUPLICATE DRAWING DISTRIBUTION

TEC BAR 4 X 1/4 X 5 3/4"

DWG SIZE A CLASS CODE (1) 4 CLASS NO. (3) 999

REV ID	DATE	REV BY	CHK BY	REVISION DESCRIPTION

DRAWN	ENGR	DATE	SCALE
RJS		01/05/10	NONE

P.A. CHK	SHOP CHK

OTHER SPECIFICATIONS
M-58, M-68

MATERIAL	THICKNESS	WEIGHT
S165	0.250 IN	2#

VALMONT MICROFLECT

ORDER NO.	CUSTOMER	DESCRIPTION	DWG NO.
13075-09	MOTOROLA	GUSSET	YF05593

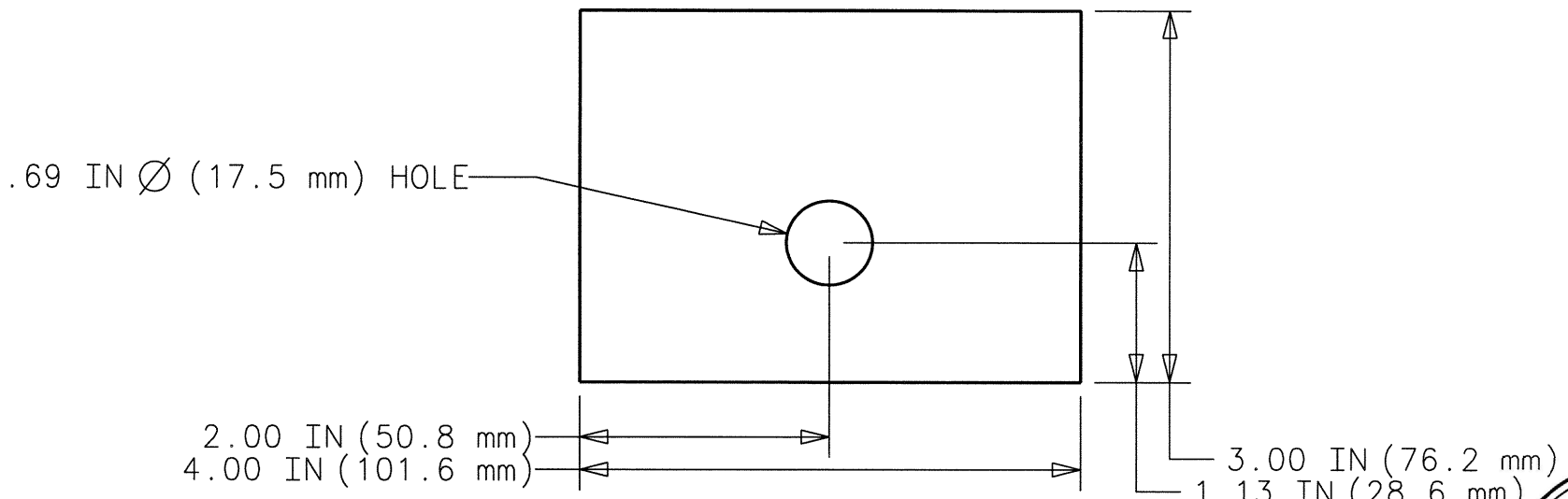

REGISTERED PROFESSIONAL ENGINEER
JEFFREY E. GRASSMAN
C 63982
EXP.
CIVIL
STATE OF CALIFORNIA

DUPLICATE DRAWING DISTRIBUTION

TEC BAR 4 X 1/4 X 3"

DWG SIZE A CLASS CODE (1) 4 CLASS NO. (3) 999

REV ID	DATE	REV BY	CHK BY	REVISION DESCRIPTION

DRAWN	ENGR	DATE	SCALE
RJS		01/05/10	NONE

P.A. CHK	SHOP CHK

OTHER SPECIFICATIONS
M-58, M-68

MATERIAL	THICKNESS	WEIGHT
S165	0.250 IN	1#

VALMONT MICROFLECT

ORDER NO.	CUSTOMER	DESCRIPTION	DWG NO.
13075-09	MOTOROLA	GUSSET	YF05594

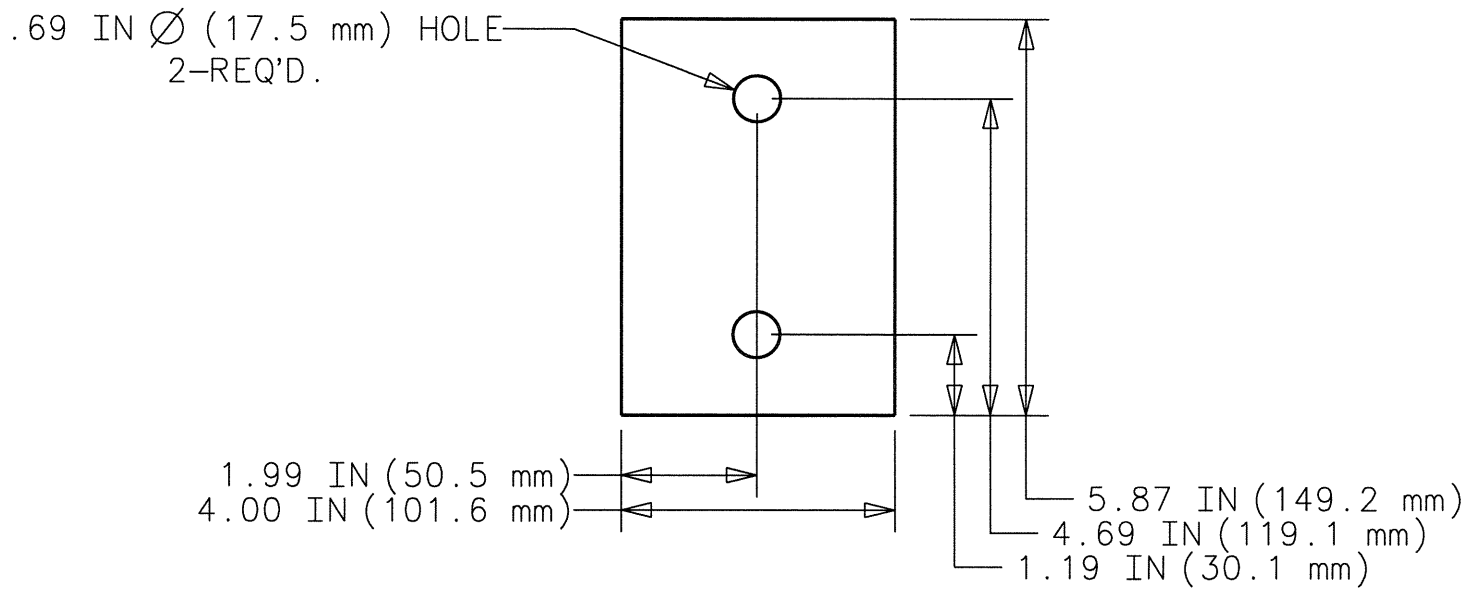

REGISTERED PROFESSIONAL ENGINEER
JEFFREY E. GRASSMAN
C 63982
EXP.
CIVIL
STATE OF CALIFORNIA

DUPLICATE DRAWING DISTRIBUTION

TEC BAR 4 X 1/4 X 5 7/8"

DWG SIZE A CLASS CODE (1) 4 CLASS NO. (3) 999

REV ID	DATE	REV BY	CHK BY	REVISION DESCRIPTION

DRAWN	ENGR	DATE	SCALE
RJS		01/05/10	NONE

P.A. CHK	SHOP CHK

OTHER SPECIFICATIONS
M-58, M-68

MATERIAL	THICKNESS	WEIGHT
S165	0.250 IN	2#

VALMONT MICROFLECT

ORDER NO.	CUSTOMER	DESCRIPTION	DWG NO.
13075-09	MOTOROLA	GUSSET	YG05252

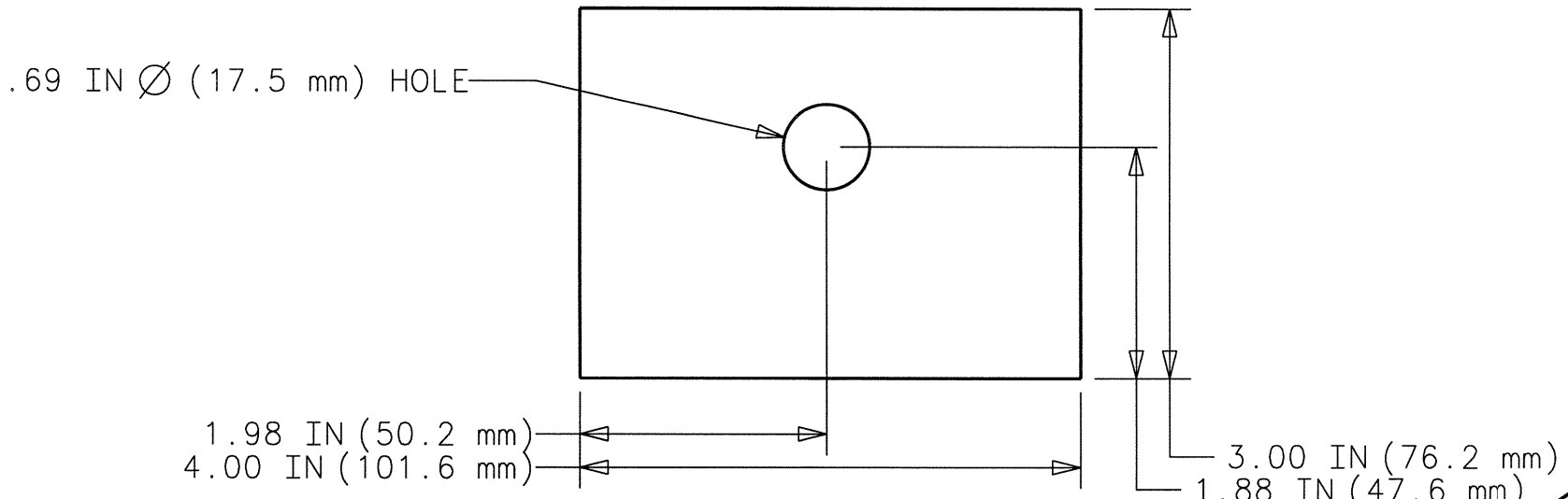

REGISTERED PROFESSIONAL ENGINEER
JEFFREY E. GRASSMAN
C 63982
EXP.
CIVIL
STATE OF CALIFORNIA

DUPLICATE DRAWING DISTRIBUTION

TEC BAR 4 X 1/4 X 3"

DWG SIZE A CLASS CODE (1) 4 CLASS NO. (3) 999

REV ID	DATE	REV BY	CHK BY	REVISION DESCRIPTION

DRAWN	ENGR	DATE	SCALE
RJS		01/05/10	NONE

P.A. CHK	SHOP CHK

OTHER SPECIFICATIONS
M-58, M-68

MATERIAL	THICKNESS	WEIGHT
S165	0.250 IN	1#

VALMONT MICROFLECT

ORDER NO.	CUSTOMER	DESCRIPTION	DWG NO.
13075-09	MOTOROLA	GUSSET	YG05253

CERTIFICATE OF COMPLIANCE - NONRESIDENTIAL PERFORMANCE COMPLIANCE METHOD	NRCC-PRF-E
Nonresidential Performance Compliance Method	(Page 3 of 16)

C1. COMPLIANCE SUMMARY

COMPLIES[3]

	Time Dependent Valuaton (TDV)		Source Energy Use
	Efficiency[1] (kBtu/ft^2 - yr)	Total[2] (kBtu/ft^2 - yr)	Total[2] (kBtu/ft^2 - yr)
Standard Design	1	1	95.39
Proposed Design	1	1	92.53
Compliance Margins	**74.09**	**74.09**	**2.86**
	Pass	**Pass**	**Pass**

[1] *Efficiency measures include improvements like a better building envelope and more efficient equipment*

[2] *Compliance Totals include efficiency, photovoltaics and batteries*

[3] *Building complies when efficiency and total compliance margins are greater than or equal to zero and unmet load hour limits are not exceeded*

APPROVED: STATE OF CA - CERTIFIED DAA

Based on the requirements of title 25 California code of regulations
Chapter 3 subchapter 2 Commercial Modular

Date: 04-25-2023 Expires: 07-31-2024

Approval # PFS: 23-002714

THIS APPROVAL DOES NOT AUTHORIZE OR APPROVE ANY OMISSION OR DEVIATION FROM THE REQUIREMENTS OF STATE LAWS OR APPLICABLE LOCAL ORDINANCES . THIS APPROVAL IS LIMITED TO FACTORY-BUILT PORTION ONLY.

PFS CORPORATION - Cottage Grove, WI

CERTIFICATE OF COMPLIANCE - NONRESIDENTIAL PERFORMANCE COMPLIANCE METHOD	NRCC-PRF-E
Nonresidential Performance Compliance Method	(Page 4 of 16)

C2. TDV ENERGY COMPLIANCE RESULTS FOR PERFORMANCE COMPONENTS (Annual TDV Energy Use, kBtu/ft^2 - yr)

COMPLIES[2]

Energy Component	Standard Design (TDV)	Proposed Design (TDV)	Compliance Margin (TDV)[1]
Space Heating	3.14	13.37	-10.23
Space Cooling	517.72	504.09	13.63
Indoor Fans	640.81	567.97	72.84
Heat Rejection	0	0	0
Pumps & Misc.	0	0	0
Domestic Hot Water	35.93	35.93	0
Indoor Lighting	23.01	25.16	-2.15
Flexibility	---	---	---
EFFICIENCY COMPLIANCE TOTAL	**1**	**1**	**74.09 (6.1%)**
Photovoltaics	---	---	---
Batteries	---	---	---
TOTAL COMPLIANCE	**1**	**1**	**74.09 (6.1%)**

[1] *Notes: This number in parenthesis following the Compliance Margin in column 4, represents the Percent Better than Standard.*

APPROVED: STATE OF CA - CERTIFIED DAA
Based on the requirements of title 25 California code of regulations
Chapter 3 subchapter 2 Commercial Modular
Date: 04-25-2023 Expires: 07-31-2024
Approval # PFS: 23-002714
THIS APPROVAL DOES NOT AUTHORIZE OR APPROVE ANY OMISSION OR DEVIATION FROM THE REQUIREMENTS OF STATE LAWS OR APPLICABLE LOCAL ORDINANCES . THIS APPROVAL IS LIMITED TO FACTORY-BUILT PORTION ONLY.
PFS CORPORATION - Cottage Grove, WI

CERTIFICATE OF COMPLIANCE - NONRESIDENTIAL PERFORMANCE COMPLIANCE METHOD	NRCC-PRF-E
Nonresidential Performance Compliance Method	(Page 5 of 16)

C3. TDV ENERGY RESULTS FOR NON-REGULATED COMPONENTS[1]

Non-Regulated Energy Component	Standard Design (TDV)	Proposed Design (TDV)	Compliance Margin (TDV)[1]
Receptacle	214.66	214.66	---
Process	1450.06	1450.06	---
Other Ltg	---	---	---
Process Motors	---	---	---
TOTAL (TOTAL COMPLIANCE + NON-REGULATED COMPONENTS)	**2885.33**	**2811.24**	**74.09 (2.6%)**

[1] *Notes: This table is not used for Energy Code Compliance.*

APPROVED: STATE OF CA - CERTIFIED DAA
Based on the requirements of title 25 California code of regulations
Chapter 3 subchapter 2 Commercial Modular
Date: 04-25-2023 Expires: 07-31-2024
Approval # PFS: 23-002714
THIS APPROVAL DOES NOT AUTHORIZE OR APPROVE ANY OMISSION OR DEVIATION FROM THE REQUIREMENTS OF STATE LAWS OR APPLICABLE LOCAL ORDINANCES . THIS APPROVAL IS LIMITED TO FACTORY-BUILT PORTION ONLY.
PFS CORPORATION - Cottage Grove, WI

CERTIFICATE OF COMPLIANCE - NONRESIDENTIAL PERFORMANCE COMPLIANCE METHOD	NRCC-PRF-E
Nonresidential Performance Compliance Method	(Page 6 of 16)

C4. SOURCE ENERGY COMPLIANCE RESULTS FOR PERFORMANCE COMPONENTS (Annual SOURCE Energy Use, kBtu/ft^2 /yr)

COMPLIES[2]

Energy Component	Standard Design (SOURCE)	Proposed Design (SOURCE)	Compliance Margin (SOURCE)[1]
Space Heating	0.45	1.95	-1.5
Space Cooling	31.74	27.91	3.83
Indoor Fans	57.57	56.88	0.69
Heat Rejection	0	0	0
Pumps & Misc.	0	0	0
Domestic Hot Water	3.86	3.86	0
Indoor Lighting	1.77	1.93	-0.16
Flexibility	---	---	---
EFFICIENCY COMPLIANCE TOTAL	**95.39**	**92.53**	**2.86 (3%)**
Photovoltaics	---	---	---
Batteries	---	---	---
TOTAL COMPLIANCE	**95.39**	**92.53**	**2.86 (3%)**

[1] *Notes: This number in parenthesis following the Compliance Margin in column 4, represents the Percent Better than Standard.*

APPROVED: STATE OF CA - CERTIFIED DAA
Based on the requirements of title 25 California code of regulations
Chapter 3 subchapter 2 Commercial Modular
Date: 04-25-2023 Expires: 07-31-2024
Approval # PFS: 23-002714
THIS APPROVAL DOES NOT AUTHORIZE OR APPROVE ANY OMISSION OR DEVIATION FROM THE REQUIREMENTS OF STATE LAWS OR APPLICABLE LOCAL ORDINANCES . THIS APPROVAL IS LIMITED TO FACTORY-BUILT PORTION ONLY.
PFS CORPORATION - Cottage Grove, WI

CERTIFICATE OF COMPLIANCE - NONRESIDENTIAL PERFORMANCE COMPLIANCE METHOD	NRCC-PRF-E
Nonresidential Performance Compliance Method	(Page 7 of 16)

C5. SOURCE ENERGY RESULTS FOR NON-REGULATED COMPONENTS[1]

Non-Regulated Energy Component	Standard Design (SOURCE)	Proposed Design (SOURCE)	Compliance Margin (SOURCE)[1]
Receptacle	15.43	15.43	---
Process	93.6	93.6	---
Other Ltg	---	---	---
Process Motors	---	---	---
TOTAL (TOTAL COMPLIANCE + NON-REGULATED COMPONENTS)	**204.42**	**201.56**	**2.86 (1.4%)**

[1] *Notes: This table is not used for Energy Code Compliance.*

C6. 'ABOVE CODE' QUALIFICATIONS

☐ This project is pursuing CalGreen Tier 1 ☐ This project is pursuing CalGreen Tier 2

APPROVED: STATE OF CA - CERTIFIED DAA
Based on the requirements of title 25 California code of regulations
Chapter 3 subchapter 2 Commercial Modular
Date: 04-25-2023 Expires: 07-31-2024
Approval # PFS: 23-002714
THIS APPROVAL DOES NOT AUTHORIZE OR APPROVE ANY OMISSION OR DEVIATION FROM THE REQUIREMENTS OF STATE LAWS OR APPLICABLE LOCAL ORDINANCES . THIS APPROVAL IS LIMITED TO FACTORY-BUILT PORTION ONLY.
PFS CORPORATION - Cottage Grove, WI

APPROVED: STATE OF CA - CERTIFIED DAA
Based on the requirements of title 25 California code of regulations
~~Chapter 6 subchapter 2~~ Commercial Modular
Date: 04-25-2023 Expires: 07-31-2024
Approval # PFS: 23-002714
THIS APPROVAL DOES NOT AUTHORIZE OR APPROVE ANY OMISSION OR DEVIATION FROM THE REQUIREMENTS OF STATE LAWS OR APPLICABLE LOCAL ORDINANCES . THIS APPROVAL IS LIMITED TO - FACTORY-BUILT PORTION ONLY.
PFS CORPORATION - Cottage Grove, WI

C7. ENERGY USE SUMMARY

Energy Component	Standard Design Site (MWh)	Proposed Design Site (MWh)	Margin (MWh)	Standard Design Site (MBtu)	Proposed Design Site (MBtu)	Margin (MBtu)
Space Heating	0	0.1	-0.1	---	---	---
Space Cooling	3.7	3.6	0.1	---	---	---
Indoor Fans	4.3	3.8	0.5	---	---	---
Heat Rejection	---	---	---	---	---	---
Pumps & Misc.	---	---	---	---	---	---
Domestic Hot Water	0.2	0.2	0	---	---	---
Indoor Lighting	0.2	0.2	0	---	---	---
Flexibility	---	---	---	---	---	---
EFFICIENCY TOTAL	**8.4**	**7.9**	**0.5**	**0**	**0**	**0**
Photovoltaics	---	---	---	---	---	---
Batteries	---	---	---	---	---	---
ENERGY USE SUBTOTAL	**8.4**	**7.9**	**0.5**	**0**	**0**	**0**
Receptacle	1.6	1.6	0	---	---	---
Process	12	12	0	---	---	---
Other Ltg	---	---	---	---	---	---
Process Motors	---	---	---	---	---	---
ENERGY USE TOTAL	**22**	**21.5**	**0.5**	**0**	**0**	**0**

APPROVED: STATE OF CA - CERTIFIED DAA
Based on the requirements of title 25 California code of regulations
Chapter 2 subchapter 2 Commercial Modular
Date: 04-25-2023 Expires: 07-31-2024
Approval # PFS: 23-002714
THIS APPROVAL DOES NOT AUTHORIZE OR APPROVE ANY OMISSION OR DEVIATION FROM THE REQUIREMENTS OF STATE LAWS OR APPLICABLE LOCAL ORDINANCES . THIS APPROVAL IS LIMITED TO FACTORY-BUILT PORTION ONLY.
PFS CORPORATION - Cottage Grove, WI

C8. ENERGY USE INTENSITY (EUI)

	Standard Design (kBtu/ft^2 / yr)	Proposed Design (kBtu/ft^2 / yr)	Margin (kBtu/ft^2 / yr)	Margin Percentage
GROSS EUI[1]	390.96	382.07	8.89	2.27
NET EUI[1]	390.96	382.07	8.89	2.27

1Notes: Gross EUI is Energy Use Total (not including PV)/Total Building Area. Net EUI is Energy Use Total (including PV)/Total Building Area.

D1. EXCEPTIONAL CONDITIONS

- NoServiceWaterHeating

G1. ENVELOPE GENERAL INFORMATION (conditioned spaces only)

1	2	3	4
Opaque Surfaces & Orientation	**Total Gross Surface Area (ft^2)**	**Total Fenestration Area (ft^2)**	**Window to Wall Ratio (%)**
North-Facing[1]	108	0	0
East-Facing[2]	144	0	0
South-Facing[3]	108	0	0
West-Facing[4]	144	0	0
Total	**504**	**0**	**0**
Roof	192	0	0

Notes
[1]North-Facing is oriented to within 45 degrees of true north, including 45 00'00" east of north (NE), but excluding 45 00'00" west of north (NW),
[2]East-Facing is oriented to within 45 degrees of true east, including 45 00'00" south of east (SE), but excluding 45 00'00" north of east (NE),
[3]South-Facing is oriented to within 45 degrees of true south, including 45 00'00" west of south (SW), but excluding 45 00'00" east of south (SE),
[4]West-Facing is oriented to within 45 degrees of true west, including 45 00'00" north of west (NW), but excluding 45 00'00" south of west (SW),

APPROVED: STATE OF CA - CERTIFIED DAA
Based on the requirements of title 25 California code of regulations
Chapter 2 subchapter 2 Commercial Modular
Date: 04-25-2023 Expires: 07-31-2024
Approval # PFS: 23-002714
THIS APPROVAL DOES NOT AUTHORIZE OR APPROVE ANY OMISSION OR DEVIATION FROM THE REQUIREMENTS OF STATE LAWS OR APPLICABLE LOCAL ORDINANCES . THIS APPROVAL IS LIMITED TO FACTORY-BUILT PORTION ONLY.
PFS CORPORATION - Cottage Grove, WI

G4. NONRESIDENTIAL AIR BARRIER

01	02
Building Story Name	Air Barrier
Com-Floor 1	No air barrier

G5. OPAQUE SURFACE ASSEMBLY SUMMARY

01	02	03	04	05	06		07	08	09	10
Surface Name		Area (ft^2)	Framing Type	Cavity R-Value	Continuous R-Value		Units	Value	Description of Assembly Layers	Status[1]
					Interior	Exterior				
R-13 Wall7	Exterior Wall	504	Wood	13	N/A	N/A	U-factor	0.1015	Stucco - 7/8 in. Vapor permeable felt - 1/8 in. Composite-1 Gypsum Board - 1/2 in.	N
Standing Seam Roof R-1914	Roof	192	N/A	19	N/A	N/A	U-factor	0.082	Metal Standing Seam - 1/16 in. Composite-2	N
Raised Slab Floor + R1116	Exterior Floor	192	N/A	0	N/A	11	U-factor	0.0807	Concrete - 140 lb/ft3 - 4 in. Compliance Insulation R11.00	N

[1] *Status: N - New, A - Altered, E - Existing*

G6A. OPAQUE DOOR SUMMARY (NONRESIDENTIAL)

01	02	03	04
Assembly Name	Area (ft^2)	Overall U-factor	Status[1]
Metal Door9	21	1.45	N

APPROVED: STATE OF CA - CERTIFIED DAA
Based on the requirements of title 25 California code of regulations
Chapter 2 subchapter 2 Commercial Modular
Date: 04-25-2023 Expires: 07-31-2024
Approval # PFS: 23-002714
THIS APPROVAL DOES NOT AUTHORIZE OR APPROVE ANY OMISSION OR DEVIATION FROM THE REQUIREMENTS OF STATE LAWS OR APPLICABLE LOCAL ORDINANCES . THIS APPROVAL IS LIMITED TO FACTORY-BUILT PORTION ONLY.
PFS CORPORATION - Cottage Grove, WI

H1. DRY SYSTEM EQUIPMENT (FURNACES, AIR HANDLING UNITS, HEAT PUMPS, VRF, ECONOMIZERS ETC.)

01	02	03	04	05	06	07	08	09	10	11	12
Equipment Name	Equipment Type	Qty	Heating				Cooling			Economizer Type (if present)	Status[1]
			Total Heating Output (kBtu/h)	Supp Heat Output (kBtu/h)	Efficiency Unit	Efficiency	Total Cooling Output (kBtu/h)	Efficiency Unit	Efficiency		
Bard W36	Single Package VHP Air System	2	34.37	17.07	COP	3.3	34.37	EER	11.1	No Economizer	N

[1] *Status: N - New, A - Altered, E - Existing*

H3. NONRESIDENTIAL / COMMON USE AREA FAN SYSTEMS SUMMARY

01	02	03	04	05	06	07	08	09	10	11	12	13
Name or Item Tag	Qty	Design OA CFM	Supply Fan				Return / Relief Fan					Status[1]
			CFM	Power	Power Units	Control	Fan Type	CFM	Power	Power Units	Control	
Bard W36	2	0	1,150	0.33	BHP	Constant Vol	N/A	N/A	N/A	N/A	N/A	N

[1] *Status: N - New, A - Altered, E - Existing*

H9. NONRESIDENTIAL / COMMON USE AREA & HOTEL/MOTEL VENTILATION

1	2	3	4	5	6	7
Zone Name	Mechanical Ventilation				Conditioned Area (sf)	DCV or Occupant Sensor Controls, or Both
	Ventilation Function	# of People# of People	Supply OA CFM	Exhaust CFM		
1-Utility Room	General - Unoccupied	0.29	0	0	192	N/A

CERTIFICATE OF COMPLIANCE - NONRESIDENTIAL PERFORMANCE COMPLIANCE METHOD **NRCC-PRF-E**

Nonresidential Performance Compliance Method **(Page 12 of 16)**

H11. ZONAL SYSTEM AND TERMINAL UNIT SUMMARY

01	02	03	04	05	06	07	08	09	10	11	12
System ID	System Type	Qty	Rated Capacity (kBtuh)		Airflow (cfm)			Fan			VSD
			Heating	Cooling	Design	MIn.	Min. Ratio	Power	Power Units	Cycles	
1-Utility Room-Trm	Uncontrolled	2	N/A	N/A	2,300	N/A	0	0.33	BHP	N/A	Constant Speed

K1. INDOOR CONDITIONED LIGHTING GENERAL INFO

01	02	03	04	05	06
Occupancy Type[1]	Conditioned Floor Area[2] (ft^2)	Installed Lighting Power (Watts)	Lighting Control Credits (Watts)	Additional (Custom) Allowance	
				Area Category Footnotes (Watts)	Area Category Footnotes (Watts)
Electrical Mechancial Telephone Room	192	84	0	0	0
Building Totals:	**192**	**84**	**0**	**0**	**0**

[1]*See Table 140.6-C*

[2]*See NRCC-LTI--E for unconditioned spaces*

[3]*Lighting information for existing spaces modeled is not included in this table*

APPROVED: STATE OF CA - CERTIFIED DAA

Based on the requirements of title 25 California code of regulations
Chapter 3 subchapter 2 Commercial Modular

Date: 04-25-2023 Expires: 07-31-2024

Approval # PFS: 23-002714

THIS APPROVAL DOES NOT AUTHORIZE OR APPROVE ANY OMISSION OR DEVIATION FROM THE REQUIREMENTS OF STATE LAWS OR APPLICABLE LOCAL ORDINANCES . THIS APPROVAL IS LIMITED TO FACTORY-BUILT PORTION ONLY.

PFS CORPORATION - Cottage Grove, WI

APPROVED: STATE OF CA - CERTIFIED DAA
Based on the requirements of title 25 California code of regulations
Chapter 3 subchapter 2 Commercial Modular
Date: 04-25-2023 Expires: 07-31-2024
Approval # PFS: 23-002714
THIS APPROVAL DOES NOT AUTHORIZE OR APPROVE ANY OMISSION OR DEVIATION FROM THE REQUIREMENTS OF STATE LAWS OR APPLICABLE LOCAL ORDINANCES. THIS APPROVAL IS LIMITED TO FACTORY-BUILT PORTION ONLY.
PFS CORPORATION - Cottage Grove, WI

K2. INDOOR CONDITIONED LIGHTING SCHEDULE

Luminaire Schedule (includes all permanent installed lighting in conditioned space, and portable lighting over 0.3 w/ft^2 in offices)

01	02	03	04	05	06
Name or Item Tag	Complete Luminaire Description (i.e. 3-lamp fluorescent troffer, F32T8, one dimmable electronic ballast)	Installed Watts (Conditioned)			
		Watts per luminaire	How is Wattage determined	Total Number of Luminaires	Installed Watts
70	4-ft LED - 28W	28	According to	3	84

[1] *If lighting power densities were used in the compliance model Building Departments will need to check prescriptive forms for Luminaire Schedule details.*

K3. INDOOR CONDITIONED LIGHTING CONTROL CREDITS

Lighting Control Credits Schedule (includes all lighting controls installed in conditioned space for compliance credit per 140.6(a)2 and Table 140.6-A)

01	02	03	04	05	06	07	08	09
Area Description	Primary Function Area (must meet requirements of Table 140.6-A and 170.2-L)	Type of Lighting Control	Power Adjustment Factor (PAF)	Luminaire Item Tag	Watts per Luminaire	# of Luminaires	Lighting Controlled (Watts)	Control Credit (Watts)
S-1-Utility Room	Electrical Mechancial Telephone Room			70	28	3	84	0
							Lighting Control Credits (Conditioned) Total (Watts)	0

K4. INDOOR CONDITIONED LIGHTING MANDATORY LIGHTING CONTROL

1	2
NA	Required

3	4	5	6	7	8	9
All Lighting	AllOthersSpace	Required	Required	Required	NA	NA

CERTIFICATE OF COMPLIANCE - NONRESIDENTIAL PERFORMANCE COMPLIANCE METHOD	NRCC-PRF-E
Nonresidential Performance Compliance Method	(Page 14 of 16)

L. DECLARATION OF REQUIRED CERTIFICATES OF INSTALLATION

Selections made by Documentation Author indicate which Certificates of Installation must be submitted for the features to be recognized for compliance. These documents must be retained and provided to the building inspector during construction and can be found online

Building Component	Form/Title
Envelope	NRCI-ENV-01-E - Must be submitted for all buildings
Envelope	NRCI-ENV-E - Envelope (for all buildings)
Mechanical	NRCI-MCH-01-E - Must be submitted for all buildings
Mechanical	NRCI-MCH-E - For all buildings with Mechanical Systems
Indoor Lighting	NRCI-LTI-01-E - Must be submitted for all buildings
Indoor Lighting	NRCI-LTI-E - Indoor Lighting (for all buildings)

APPROVED: STATE OF CA - CERTIFIED DAA
Based on the requirements of title 25 California code of regulations
Chapter 3 subchapter 2 Commercial Modular
Date: 04-25-2023 Expires: 07-31-2024
Approval # PFS: 23-002714
THIS APPROVAL DOES NOT AUTHORIZE OR APPROVE ANY OMISSION OR DEVIATION FROM THE REQUIREMENTS OF STATE LAWS OR APPLICABLE LOCAL ORDINANCES . THIS APPROVAL IS LIMITED TO FACTORY-BUILT PORTION ONLY.
PFS CORPORATION - Cottage Grove, WI

M. DECLARATION OF REQUIRED CERTIFICATES OF ACCEPTANCE

Selections made by Documentation Author indicate which Certificates of Acceptance must be submitted for the features to be recognized for compliance. These documents must be provided to the building inspector during construction and must be completed through an Acceptance Test Technician Certificaiton Provider (ATTCP). For more information visit: https://www.energy.ca.gov/title24/2019standards/2019_compliance_documents/Nonresidential_Documents/NRCA/

Building Component	Form/Title
Indoor Lighting	NRCA-LTI-02-A - Occupancy Sensors and Automatic Time Switch Controls.
Mechanical	NRCA-MCH-02-A - Outdoor Air must be submitted for all newly installed HVAC units. Note: MCH-02-A can be performed in conjunction with MCH-07-A Supply Fan VFD Acceptance (if applicable) since testing activities overlap
Mechanical	NRCA-MCH-21-H Multifamily Envelope

N. DECLARATION OF REQUIRED CERTIFICATES OF VERIFICATION

Selections made by Documentation Author indicate which Certificates of Verification must be submitted for the features to be recognized for compliance. These documents must be retained and provided to the building inspector during construction and can be found online

Building Component	Form/Title
Mechanical	NRCV-MCH-24 Enclosure Air Leakaage

APPROVED: STATE OF CA - CERTIFIED DAA
Based on the requirements of title 25 California code of regulations
Chapter 3 subchapter 2 Commercial Modular
Date: 04-25-2023 Expires: 07-31-2024
Approval # PFS: 23-002714
THIS APPROVAL DOES NOT AUTHORIZE OR APPROVE ANY OMISSION OR DEVIATION FROM THE REQUIREMENTS OF STATE LAWS OR APPLICABLE LOCAL ORDINANCES . THIS APPROVAL IS LIMITED TO FACTORY-BUILT PORTION ONLY.
PFS CORPORATION - Cottage Grove, WI

CERTIFICATE OF COMPLIANCE - NONRESIDENTIAL PERFORMANCE COMPLIANCE METHOD	NRCC-PRF-E
Nonresidential Performance Compliance Method	(Page 15 of 16)

Documentation Author's Declaration Statement

1. I certify that this Certificate of Compliance documentation is accurate and complete.

Documentation Author Name: Arden Childers	Documentation Author Signature: Arden Childers
Company: Wade Energy	Signature Date: 02/07/2023
Address: 1942 Linda Dr.	CEA/HERS Certification Identification (if applicable): N/A
City/State/Zip: ,	Phone: 925.203.5686 x 4

Responsible Person's Declaration statement

2. I certify the following under penalty of perjury, under the laws of the State of California:

1. The information provided on this Certificate of Compliance is true and correct.
2. I am eligible under Division 3 of the Business and Professions Code to accept responsibility for the building design or system design identified on this Certificate of Compliance (responsible designer)
3. The energy features and performance specifications, materials, components, and manufactured devices for the building design or system design identified on this Certificate of Compliance conform to the requirements of Title 24, Part 1 and Part 6 of the California Code of Regulations.
4. The building design features or system design features identified on this Certificate of Compliance are consistent with the information provided on other applicable compliance documents, worksheets, calculations, plans and specifications submitted to the enforcement agency for approval with this building permit application.
5. I understand that a registered copy of this Certificate of Compliance shall be made available with the building permit(s) issued for the building, and made available to the enforcement agency for all applicable inspections, and I will take the necessary steps to accomplish this requirement.
6. I understand that a registered copy of this Certificate of Compliance is required to be included with the documentation the builder provides to the building owner at occupancy, and I will take the necessary steps to accomplish these requirements.

Responsible Designer Name: Alexander Takahashi, P.E.	Responsible Designer Signature:	
Company: WestPower Engineering		
Address: 2221 Muir Woods PL	Date Signed: 02-08-2023	
City/State/Zip: Davis, CA 95616	License #: E8505	
Phone: (510) 848-0505	Title: Professional Engineer	Scope: Oversee design /approval

Responsible Designer Name: Alexander Takahashi, P.E.	Responsible Designer Signature:	
Company: WestPower Engineering		
Address: 2221 Muir Woods PL	Date Signed: 02-08-2023	
City/State/Zip: Davis, CA 95616	License #: E8505	
Phone: (510) 848-0505	Title: Professional Engineer	Scope: Oversee design /approval

CERTIFICATE OF COMPLIANCE - NONRESIDENTIAL PERFORMANCE COMPLIANCE METHOD	NRCC-PRF-E
Nonresidential Performance Compliance Method	**(Page 16 of 16)**

Responsible Designer Name: Alexander Takahashi, P.E.	Responsible Designer Signature:	
Company: WestPower Engineering		
Address: 2221 Muir Woods PL	Date Signed: 02-08-2023	
City/State/Zip: Davis, CA 95616	License #: E8505	
Phone: (510) 848-0505	Title: Professional Engineer	Scope: Oversee design /approval

APPROVED: STATE OF CA - CERTIFIED DAA

Based on the requirements of title 25 California code of regulations
Chapter 3 subchapter 2 Commercial Modular

Date: 04-25-2023 Expires: 07-31-2024

Approval # PFS: 23-002714

THIS APPROVAL DOES NOT AUTHORIZE OR APPROVE ANY OMISSION OR DEVIATION FROM THE REQUIREMENTS OF STATE LAWS OR APPLICABLE LOCAL ORDINANCES . THIS APPROVAL IS LIMITED TO FACTORY-BUILT PORTION ONLY.

PFS CORPORATION - Cottage Grove, WI

CERTIFICATE OF COMPLIANCE			**NRCC-LTO-E**
This document is used to demonstrate compliance with requirements in 110.9, 130.0, 130.2, 140.7, and 141.0(b)2L for outdoor lighting scopes using the prescriptive path for nonresidential and hotel/motel occupancies. It is also used to document compliance with requirements in 160.5, 170.2(e)6, 180.1(a) and 180.2(b)4Bv for outdoor lighting scopes using the prescriptive path for multifamily and mixed-use occupancies. Multifamily includes dormitory and senior living facilities.			
Project Name:	Shelter Model 7070 - Strauch Drive	**Report Page:**	**(Page 1 of 7)**
Project Address:	2001 Strauch Drive	**Date Prepared:**	2/7/2023

A. GENERAL INFORMATION

01	Project Location (city)	Roseville	04	Total Illuminated Hardscape Area (ft^2)	0
02	Climate Zone	11			

03 Outdoor Lighting Zone per Title 24 Part 1 10.114 or as designated by Authority Having Jurisdiction (AHJ):

☐	LZ-0: Very Low - Undeveloped Parkland	☐	LZ-2: Moderate - Urban Clusters	☐	LZ-4: High - Must be reviewed by CA Energy Commission for Approval
☐	LZ-1: Low - Rural Areas	☒	LZ-3: Moderately High - Urban Areas		

05 Occupancy Types within Project

- Warehouse

B. PROJECT SCOPE

This table includes outdoor lighting systems that are within the scope of the permit application and are demonstrating compliance using the prescriptive path outlined in 140.7 / 170.2(e)6 or 141.0(b)2L / 180.2(b)4Bv for alterations.

My Project Consists of:

01		02		
☒	New Lighting System	Must Comply with Allowances from 140.7 / 170.2(e)6		
☐	Altered Lighting System	Is your alteration increasing the connected lighting load (Watts)?	○ Yes	○ No
03		**04**		**05**
% of Existing Luminaires Being Altered[1]		**Sum Total of Luminaires Being Added or Altered**		**Calculation Method**
☐ < 10%	☐ >= 10% and < 50% ☐ >= 50%			

Please proceed to Table F. Outdoor Lighting Fixture Schedule to define the project's luminaires.

[1] *FOOTNOTES: % of Existing Luminaires Being Altered = (Sum Total of Luminaires Being Added or Altered / Existing Luminaires within the Scope of the Permit Application) x 100.*

APPROVED: STATE OF CA - CERTIFIED DAA
Based on the requirements of title 25 California code of regulations
Chapter 3 subchapter 2 Commercial Modular
Date: 04-25-2023 Expires: 07-31-2024
Approval # PFS: 23-002714
THIS APPROVAL DOES NOT AUTHORIZE OR APPROVE ANY OMISSION OR DEVIATION FROM THE REQUIREMENTS OF STATE LAWS OR APPLICABLE LOCAL ORDINANCES. THIS APPROVAL IS LIMITED TO FACTORY-BUILT PORTION ONLY.
PFS CORPORATION - Cottage Grove, WI

CERTIFICATE OF COMPLIANCE			NRCC-LTO-E
Project Name:	Shelter Model 7070 - Strauch Drive	**Report Page:**	**(Page 2 of 7)**
Project Address:	2001 Strauch Drive	**Date Prepared:**	2/7/2023

C. COMPLIANCE RESULTS

Results in this table are automatically calculated from data input and calculations in Tables F through N. Note: If any cell on this table says "COMPLIES with Exceptional Conditions" refer to Table D. Exceptional Conditions for guidance or see applicable Table referenced below.

Calculations of Total Allowed Lighting Power (Watts) 140.7 / 170.2(e)6 or 141.0(b)2L / 180.2(b)4Bv											Compliance Results			
01		02		03		04		05		06		07		08	09
General Hardscape Allowance 140.7(d)1 / 170.2(e)6 (See Table I)	+	Per Application 140.7(d)2 / 170.2(e)6 (See Table J)	+	Sales Frontage 140.7(d)2 (See Table K)	+	Ornamental 140.7(d)2 / 170.2(e)6 (See Table L)	+	Per Specific Area 140.7(d)2 / 170.2(e)6 (See Table M)	OR	Existing Power Allowance 141.0(b)2L / 180.2(b)4Bv (See Table N)	=	**Total Allowed** (Watts)	≥	**Total Actual** (Watts)	**07 must be >= 08**
0	+	19	+	---	+	---	+	---	OR	---	=	19	≥	19	COMPLIES
Shielding Compliance (See Table G for Details)															N/A
Controls Compliance (See Table H for Details)															COMPLIES

D. EXCEPTIONAL CONDITIONS

This table is auto-filled with uneditable comments because of selections made or data entered in tables throughout the form.

E. ADDITIONAL REMARKS

This table includes remarks made by the permit applicant to the Authority Having Jurisdiction.

APPROVED: STATE OF CA - CERTIFIED DAA
Based on the requirements of title 25 California code of regulations
Chapter 3 subchapter 2 Commercial Modular
Date: 04-25-2023 Expires: 07-31-2024
Approval # PFS: 23-002714
THIS APPROVAL DOES NOT AUTHORIZE OR APPROVE ANY OMISSION OR DEVIATION FROM THE REQUIREMENTS OF STATE LAWS OR APPLICABLE LOCAL ORDINANCES . THIS APPROVAL IS LIMITED TO FACTORY-BUILT PORTION ONLY.
PFS CORPORATION - Cottage Grove, WI

CERTIFICATE OF COMPLIANCE			NRCC-LTO-E
Project Name:	Shelter Model 7070 - Strauch Drive	**Report Page:**	**(Page 3 of 7)**
Project Address:	2001 Strauch Drive	**Date Prepared:**	2/7/2023

F. OUTDOOR LIGHTING FIXTURE SCHEDULE

For new or altered lighting systems demonstrating compliance with 140.7 / 170.2(e)6 all new luminaires being installed and any existing luminaires remaining or being moved within the spaces covered by the permit application are included in the Table below. For altered lighting systems using the Existing Power method per 141.0(b)2L only new luminaires being installed and replacement luminaires being installed as part of the project scope are included (ie, existing luminaires remaining or existing luminaires being moved are not included). Outdoor lighting attached to multifamily buildings and controlled from the inside of a dwelling unit are included in Table H. and are not included here. All other multifamily outdoor lighting is included here.

Designed Wattage:

01	02		03	04	05	06	07	08	09	10	
Name or Item Tag	Complete Luminaire Description		Watts per luminaire[1, 2]	How is Wattage determined	Total Number Luminaires [2]	Luminaire Status[3]	Excluded per 140.7(a) / 170.2(e)6A	Design Watts	Cutoff Req. > 6,200 initial lumen output 130.2(b) / 160.5(c)1[4]	Field Inspector	
										Pass	Fail
71	19W LED	☐ Linear	19	Mfr. Spec	1	New	☐	19	NA: < 6200 lumens	☐	☐
							Total Design Watts:	19			

* NOTES: Selections with a * require a note in the space below explaining how compliance is achieved.
EX: Luminaire is lighting a statue; EXCEPTION 2 to 130.2(b)

[1]FOOTNOTES: Authority Having Jurisdiction may ask for Luminaire cut sheets to confirm wattage used for compliance per 130.0(c) / 160.5(b)

[2] For linear luminaires, wattage should be indicated as W/lf instead of Watts/luminaire. Total linear feet should be indicated in column 05 instead of number of luminaires.

[3] Select "New" for new luminaires in a new outdoor lighting project, or for added luminaires in an alteration. Select "Altered" for replacement luminaires in an alteration. Select "Existing to Remain" for existing luminaires within the project scope that are not being altered and are remaining. Select "Existing Reinstalled" for existing luminaires which are being removed and reinstalled as part of the project scope.

[4] Compliance with mandatory shielding requirements is required for luminaires with initial lumen output >= 6,200 unless exempted by 130.2(b)/ 160.5(c)

G. SHIELDING REQUIREMENTS (BUG)

This section does not apply to this project.

APPROVED: STATE OF CA - CERTIFIED DAA
Based on the requirements of title 24 California code of regulations
Chapter 3 subchapter 2 Commercial Modular
Date: 04-25-2023 Expires: 07-31-2024
Approval # PFS: 23-002714
THIS APPROVAL DOES NOT AUTHORIZE OR APPROVE ANY OMISSION OR DEVIATION FROM THE REQUIREMENTS OF STATE LAWS OR APPLICABLE LOCAL ORDINANCES . THIS APPROVAL IS LIMITED TO FACTORY-BUILT PORTION ONLY.
PFS CORPORATION - Cottage Grove, WI

CERTIFICATE OF COMPLIANCE			NRCC-LTO-E
Project Name:	Shelter Model 7070 - Strauch Drive	**Report Page:**	**(Page 4 of 7)**
Project Address:	2001 Strauch Drive	**Date Prepared:**	2/7/2023

H. OUTDOOR LIGHTING CONTROLS

This table demonstrates compliance with controls requirements for all new or altered luminaires installed as part of the permit application. For alteration projects, luminaires which are existing to remain (ie untouched) and luminaires which are removed and reinstalled (wiring only) do not need to be included in this table even if they are within the spaces covered by the permit application.
Outdoor lighting for nonresidential buildings, parking garages and common service areas in multifamily buildings must be documented separately from outdoor lighting attached to multifamily buildings and controlled from the inside of a dwelling unit

Mandatory Controls for Nonresidential Occupancies, Parking Garages & Common Areas in Multifamily Buildings

01	02	03	04	05	
Area Description	Shut-Off 130.2(c)1 / 160.5(c)	Auto-Schedule 130.2(c)2 / 160.5(c)	Motion Sensor 130.2(c)3 / 160.5(c)	Field Inspector	
				Pass	Fail
Facade Lighting	Photocontrol	Provided	NA: Not permitted by H&LS	☐	☐

[1]*FOOTNOTE: Text has been abbreviated, please refer to Table 160.5-A to confirm compliance with the specific light source technologies listed.*

[2]*Authority having jurisdiction may ask for cutsheets or other documentation to confirm compliance of light source.*

[3]*Recessed luminaires marked for use in fire-rated installations, and recessed luminaires installed in non-insulated ceilings are excepted from ii and iii.*

I. LIGHTING POWER ALLOWANCE (per 140.7 / 170.2(e))

This table includes areas using allowance calculations per 140.7 / 170.2(e). General Hardscape Allowance is per Table 140.7-A/Table 170.2-R while "Use it or lose it" Allowances are per Table 140.7-B /Table 170.2-S. Indicate which allowances are being used to expand sections for user input. Luminaires that qualify for one of the "Use it or lose it" allowances shall not qualify for another "Use it or lose it" allowance.
Outdoor lighting attached to multifamily buildings and controlled from the inside of a dwelling unit are included in Table H. and are not included here. All other multifamily outdoor lighting is included here.

01				
☐ General Hardscape Allowance Table I (below)	"Use it or lose it" Allowance (select all that apply) (select all that apply)			
	☒ Per Application Table J	☐ Sales Frontage Table K	☐ Ornamental Table L	☐ Per Specific Area Table M

APPROVED: STATE OF CA - CERTIFIED DAA
Based on the requirements of title 25 California code of regulations
Chapter 3 subchapter 2 Commercial Modular
Date: 04-25-2023 Expires: 07-31-2024
Approval # PFS: 23-002714
THIS APPROVAL DOES NOT AUTHORIZE OR APPROVE ANY OMISSION OR DEVIATION FROM THE REQUIREMENTS OF STATE LAWS OR APPLICABLE LOCAL ORDINANCES . THIS APPROVAL IS LIMITED TO FACTORY-BUILT PORTION ONLY.
PFS CORPORATION - Cottage Grove, WI

CERTIFICATE OF COMPLIANCE			NRCC-LTO-E
Project Name:	Shelter Model 7070 - Strauch Drive	**Report Page:**	**(Page 5 of 7)**
Project Address:	2001 Strauch Drive	**Date Prepared:**	2/7/2023

J. LIGHTING ALLOWANCE: PER APPLICATION

This table includes areas using the wattage allowance per application from Table 140.7-B / Table 170.2-S.

01	02	03	04	05	06	07	08	09	10
Area Description	Application per Table 140.7-B[1]	CALCULATED ALLOWANCE (Watts)			DESIGN WATTS				Additional Allowance (Watts)
		# of Locations	Allowance per Location[2]	Extra Allowance (Watts)	Luminaire Name or Item Tag	Watts per Luminaire	# of Luminaires	Design Watts	
Entrance -1	Building Entrance/Exit	2	19	38	71	19	1	19	19
							Total Design Watts for this Area:	19	
								Total Allowance (Watts) All Areas:	19

[1] *FOOTNOTES: Primary entrance applications are only available for senior care facilities, healthcare facilities, police stations, hospitals, fire stations, and emergency vehicle facilities.*

[2] *The Allowance per Location for ATMs is 100W for the first ATM and 35W for each additional per Table 140.7-B /Table 170.2-S.*

[3] *For luminaires indicated in Table F as linear, wattage in column 07 is W/lf instead of Watts/luminaire. Total linear feet should be indicated in column 08 instead of number of luminaires.*

K. LIGHTING ALLOWANCE: SALES FRONTAGE

This section does not apply to this project.

L. LIGHTING ALLOWANCE: ORNAMENTAL

This section does not apply to this project.

M. LIGHTING ALLOWANCE: PER SPECIFIC AREA

This section does not apply to this project.

N. EXISTING CONDITIONS POWER ALLOWANCE (alterations only)

This section does not apply to this project.

APPROVED: STATE OF CA - CERTIFIED DAA
Based on the requirements of title 25 California code of regulations
Chapter 3 subchapter 2 Commercial Modular
Date: 04-25-2023 Expires: 07-31-2024
Approval # PFS: 23-002714
THIS APPROVAL DOES NOT AUTHORIZE OR APPROVE ANY OMISSION OR DEVIATION FROM THE REQUIREMENTS OF STATE LAWS OR APPLICABLE LOCAL ORDINANCES . THIS APPROVAL IS LIMITED TO FACTORY-BUILT PORTION ONLY.
PFS CORPORATION - Cottage Grove, WI

CERTIFICATE OF COMPLIANCE			NRCC-LTO-E
Project Name:	Shelter Model 7070 - Strauch Drive	**Report Page:**	**(Page 6 of 7)**
Project Address:	2001 Strauch Drive	**Date Prepared:**	2/7/2023

O. DECLARATION OF REQUIRED CERTIFICATES OF INSTALLATION

Form/Title
NRCI-LTO-E - Must be submitted for all buildings

P. DECLARATION OF REQUIRED CERTIFICATES OF ACCEPTANCE

Form/Title	Systems/Spaces To Be Field Verified
NRCA-LTO-02-A - Must be submitted for all outdoor lighting controls except for alterations where controls are added to <= 20 luminaires.	Facade Lighting;

APPROVED: STATE OF CA - CERTIFIED DAA
Based on the requirements of title 25 California code of regulations
Chapter 3 subchapter 2 Commercial Modular
Date: 04-25-2023 Expires: 07-31-2024
Approval # PFS: 23-002714
THIS APPROVAL DOES NOT AUTHORIZE OR APPROVE ANY OMISSION OR DEVIATION FROM THE REQUIREMENTS OF STATE LAWS OR APPLICABLE LOCAL ORDINANCES . THIS APPROVAL IS LIMITED TO FACTORY-BUILT PORTION ONLY.
PFS CORPORATION - Cottage Grove, WI

CERTIFICATE OF COMPLIANCE			NRCC-LTO-E
Project Name:	Shelter Model 7070 - Strauch Drive	**Report Page:**	**(Page 7 of 7)**
Project Address:	2001 Strauch Drive	**Date Prepared:**	2/7/2023

DOCUMENTATION AUTHOR'S DECLARATION STATEMENT

I certify that this Certificate of Compliance documentation is accurate and complete.

Documentation Author Name: Arden Childers	Documentation Author Signature: Arden Childers
Company: Wade Energy	Signature Date: 02/07/2023
Address: 1942 Linda Dr.	CEA/ HERS Certification Identification (if applicable): N/A
City/State/Zip: Pleasant Hill CA 94523	Phone: 925.203.5686 x 4

RESPONSIBLE PERSON'S DECLARATION STATEMENT

I certify the following under penalty of perjury, under the laws of the State of California:

1. The information provided on this Certificate of Compliance is true and correct.
2. I am eligible under Division 3 of the Business and Professions Code to accept responsibility for the building design or system design identified on this Certificate of Compliance (responsible designer)
3. The energy features and performance specifications, materials, components, and manufactured devices for the building design or system design identified on this Certificate of Compliance conform to the requirements of Title 24, Part 1 and Part 6 of the California Code of Regulations.
4. The building design features or system design features identified on this Certificate of Compliance are consistent with the information provided on other applicable compliance documents, worksheets, calculations, plans and specifications submitted to the enforcement agency for approval with this building permit application.
5. I will ensure that a completed signed copy of this Certificate of Compliance shall be made available with the building permit(s) issued for the building, and made available to the enforcement agency for all applicable inspections. I understand that a completed signed copy of this Certificate of Compliance is required to be included with the documentation the builder provides to the building owner at occupancy.

Responsible Designer Name: Alexander Takahashi, P.E.	Responsible Designer Signature:
Company: WestPower Engineering	Date Signed: 02-08-2023
Address: 2221 Muir Woods PL	License: E8505
City/State/Zip: Davis CA 95616	Phone: (510) 848-0505

APPROVED: STATE OF CA - CERTIFIED DAA
Based on the requirements of title 25 California code of regulations
Chapter 3 subchapter 2 Commercial Modular
Date: 04-25-2023 Expires: 07-31-2024
Approval # PFS: 23-002714
THIS APPROVAL DOES NOT AUTHORIZE OR APPROVE ANY OMISSION OR DEVIATION FROM THE REQUIREMENTS OF STATE LAWS OR APPLICABLE LOCAL ORDINANCES . THIS APPROVAL IS LIMITED TO FACTORY-BUILT PORTION ONLY.
PFS CORPORATION - Cottage Grove, WI

KH2A ENGINEERING, INC.

CLIENT VFP, INC.
PROJECT

DATE 9/25/15
JOB NO 1140
BY BKY
PAGE

REV. 3/15/23

REGISTERED PROFESSIONAL ENGINEER
BRIAN K. YEE
No. 40026
CIVIL
STATE OF CALIFORNIA

3/16/2023

LIGHTWEIGHT BUILDING CALCULATIONS

VFP, INC.

130 MPH WIND, 1.85 g SEISMIC

2021 INTERNATIONAL BUILDING CODE

APPROVED: STATE OF CA - CERTIFIED DAA
Based on the requirements of title 25 California code of regulations
Chapter 3 subchapter 2 Commercial Modular
Date: 04-25-2023 Expires: 07-31-2024
Approval # PFS: 23-002714
THIS APPROVAL DOES NOT AUTHORIZE OR APPROVE ANY OMISSION OR DEVIATION FROM THE REQUIREMENTS OF STATE LAWS OR APPLICABLE LOCAL ORDINANCES . THIS APPROVAL IS LIMITED TO FACTORY-BUILT PORTION ONLY.
PFS CORPORATION - Cottage Grove, WI

APPROVED: STATE OF CA - CERTIFIED DAA
Based on the requirements of title 25 California code of regulations
Chapter 3 subchapter 2 Commercial Modular
Date: 04-25-2023 Expires: 07-31-2024
Approval # PFS: 23-002714
THIS APPROVAL DOES NOT AUTHORIZE OR APPROVE ANY OMISSION OR DEVIATION FROM THE REQUIREMENTS OF STATE LAWS OR APPLICABLE LOCAL ORDINANCES . THIS APPROVAL IS LIMITED TO - FACTORY-BUILT PORTION ONLY.
PFS CORPORATION - Cottage Grove, WI

KH2A ENGINEERING, INC.

CLIENT VFP, INC.
PROJECT

DATE 9/25/15
JOB NO. 1140
BY BKY
PAGE

CONTENTS

DESCRIPTION	PAGE
APPLICABLE CODES	1.1
MATERIALS OF CONSTRUCTION	1.1
DESIGN CRITERIA, INCLUDING EXCERPTS FROM ASCE 7-16	1.2 - 1.7
DEAD LOADS	1.9 - 1.11
GRAVITY FORCE ELEMENT ADEQUACY	
ROOF PANS ADEQUACY	2.1 - 2.12
WALLS	3.1 - 3.8
LIGHTWEIGHT FLOOR ASSEMBLY	4.1 - 4.5
CONCRETE FLOOR ASSEMBLY	5.1 - 5.2
LIFT POINTS	6.1
LATERAL FORCE RESISTING SYSTEMS	
WIND SHEARS	7.1 - 7.3
SEISMIC SHEARS	8.1 - 8.3
LARGER BUILDINGS NEED CORNER HOLD DOWNS	9.1 - 9.3
DIAPHRAGM CHORDS OK	10.1 - 10.7

KH2A ENGINEERING, INC.

CLIENT VFP
PROJECT

DATE 9/28/15
JOB NO. 1140
BY BKY
PAGE

ANCHORAGE 11.1

VFP STANDARD LIGHTWEIGHT BUILDING DRAWINGS

TEST RESULTS - TERRAPIN TESTING

APPROVED: STATE OF CA - CERTIFIED DAA
Based on the requirements of title 25 California code of regulations
Chapter 3 subchapter 2 Commercial Modular
Date: 04-25-2023 Expires: 07-31-2024
Approval # PFS: 23-002714
THIS APPROVAL DOES NOT AUTHORIZE OR APPROVE ANY OMISSION OR DEVIATION FROM THE REQUIREMENTS OF STATE LAWS OR APPLICABLE LOCAL ORDINANCES . THIS APPROVAL IS LIMITED TO FACTORY-BUILT PORTION ONLY.
PFS CORPORATION - Cottage Grove, WI

KH2A ENGINEERING, INC.

CLIENT VFP, INC.
PROJECT

DATE 9/25/15
JOB NO. 1140
BY BKY
PAGE 1.1

APPLICABLE CODES

2021 INTERNATIONAL BUILDING CODE

ASCE 7-16 "MINIMUM DESIGN LOADS FOR BUILDINGS AND OTHER STRUCTURES"

AISC STEEL CONSTRUCTION MANUAL
NORTH AMERICAN SPECIFICATION FOR THE DESIGN OF COLD-FORMED STEEL STRUCTURAL MEMBERS

MATERIALS

ROOF AND WALL PANS	ASTM A653-SS-GR.50
SCREWS	GRABBER SUPERDRIVE 55 SERIES CS8150JBWYZ SELF TAPPING #8-18x3/4 TEK
WIDE FLANGE STEEL SHAPES	ASTM A992 F_y=50 ksi
CHANNELS	ASTM A36 F_y=36 ksi
PLATE	ASTM A36
CONCRETE	4000 PSI f'_c @ 28 DAYS 108 PCF LIGHTWEIGHT
NELSON STUDS	ASTM A108 GR 1010-1020
WELDED WIRE MESH	ASTM A185 F_y = 70 ksi

APPROVED: STATE OF CA - CERTIFIED DAA
Based on the requirements of title 25 California code of regulations
Chapter 3 subchapter 2 Commercial Modular
Date: 04-25-2023 Expires: 07-31-2024
Approval # PFS: 23-002714
THIS APPROVAL DOES NOT AUTHORIZE OR APPROVE ANY OMISSION OR DEVIATION FROM THE REQUIREMENTS OF STATE LAWS OR APPLICABLE LOCAL ORDINANCES . THIS APPROVAL IS LIMITED TO FACTORY-BUILT PORTION ONLY.
PFS CORPORATION - Cottage Grove, WI

KH2A ENGINEERING, INC.

CLIENT VFP, INC
PROJECT

DATE 9/25/15
JOB NO. 1140
BY BKY
PAGE 1.2

DESIGN CRITERIA

GRAVITY LOADS

FLOOR LIVE	125 PSF
ROOF LIVE OR ROOF SNOW	100 PSF

LATERAL LOADS

WIND	130 MPH, EXP. C,
SEISMIC	S_S = 1.85 SITE CLASS D
	I = 1.0

APPROVED: STATE OF CA - CERTIFIED DAA
Based on the requirements of title 25 California code of regulations
Chapter 3 subchapter 2 Commercial Modular
Date: 04-25-2023 Expires: 07-31-2024
Approval # PFS: 23-002714
THIS APPROVAL DOES NOT AUTHORIZE OR APPROVE ANY OMISSION OR DEVIATION FROM THE REQUIREMENTS OF STATE LAWS OR APPLICABLE LOCAL ORDINANCES . THIS APPROVAL IS LIMITED TO FACTORY-BUILT PORTION ONLY.
PFS CORPORATION - Cottage Grove, WI

APPROVED: STATE OF CA - CERTIFIED DAA
Based on the requirements of title 25 California code of regulations
Chapter 3 subchapter 2 Commercial Modular
Date: 04-25-2023 Expires: 07-31-2024
Approval # PFS: 23-002714
THIS APPROVAL DOES NOT AUTHORIZE OR APPROVE ANY OMISSION OR DEVIATION FROM THE REQUIREMENTS OF STATE LAWS OR APPLICABLE LOCAL ORDINANCES . THIS APPROVAL IS LIMITED TO FACTORY-BUILT PORTION ONLY.
PFS CORPORATION - Cottage Grove, WI

Diagrams

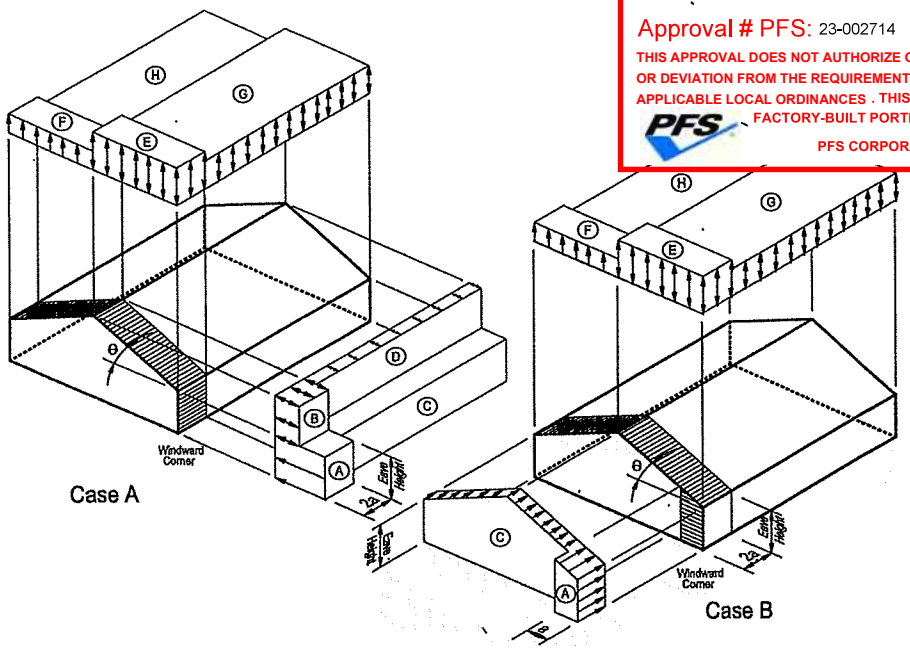

Notation

a 10% of least horizontal dimension or $0.4h$, whichever is smaller, but not less than either 4% of least horizontal dimension or 3 ft (0.9 m).
EXCEPTION: For buildings with $\theta = 0$ to 7° and a least horizontal dimension greater than 300 ft (90 m), dimension a shall be limited to a maximum of $0.8h$.

h Mean roof height, in ft (m), except that eave height shall be used for roof angles < 10°.

θ Angle of plane of roof from horizontal, in degrees.

Notes

1. Pressures shown are applied to the horizontal and vertical projections, for Exposure B, at $h = 30$ ft ($h = 9.1$ m). Adjust to other exposures and heights with adjustment factor λ.
2. The load patterns shown shall be applied to each corner of the building in turn as the reference corner (See Fig. 28.3-1).
3. For Case B, use $\theta = 0°$.
4. Load cases 1 and 2 must be checked for $25° < \theta \leq 45°$. Load case 2 at 25° is provided only for interpolation between 25° and 30°.
5. Plus and minus signs signify pressures acting toward and away from the projected surfaces, respectively.
6. For roof slopes other than those shown, linear interpolation is permitted.
7. The total horizontal load shall not be less than that determined by assuming $p_s = 0$ in Zones B and D.
8. Where Zone E or G falls on a roof overhang on the windward side of the building, use E_{OH} and G_{OH} for the pressure on the horizontal projection of the overhang. Overhangs on the leeward and side edges shall have the basic zone pressure applied.
9. Unit conversions for tables:

Adjustment Factor for Building Height and Exposure, λ

Mean roof height (ft)	Exposure B	Exposure C	Exposure D
15	1.00	1.21	1.47
20	1.00	1.29	1.55
25	1.00	1.35	1.61
30	1.00	1.40	1.66
35	1.05	1.45	1.70
40	1.09	1.49	1.74
45	1.12	1.53	1.78
50	1.16	1.56	1.81
55	1.19	1.59	1.84
60	1.22	1.62	1.87

Note: Unit conversions for tables: 1.0 ft = 0.3048 m; 1.0 lb/ft^2 = 0.0479 kN/m^2; 1 mph = 1.6 km/h

FIGURE 28.5-1 Main Wind Force Resisting System, Part 2 [$h \leq 60$ ft ($h \leq 18.3$ m)]: Design Wind Pressures for Enclosed Buildings—Walls and Roofs

continues

APPROVED: STATE OF CA - CERTIFIED DAA
Based on the requirements of title 25 California code of regulations
Chapter 3 subchapter 2 Commercial Modular
Date: 04-25-2023 Expires: 07-31-2024
Approval # PFS: 23-002714
THIS APPROVAL DOES NOT AUTHORIZE OR APPROVE ANY OMISSION OR DEVIATION FROM THE REQUIREMENTS OF STATE LAWS OR APPLICABLE LOCAL ORDINANCES . THIS APPROVAL IS LIMITED TO FACTORY-BUILT PORTION ONLY.
PFS CORPORATION - Cottage Grove, WI

Simplified Design Wind Pressure, P_{s30} (psf) for Exposure B at h = 30 ft (h = 9.1 m)

Basic Wind Speed (mph)	Roof Angle (degrees)	Load Case	Zones									
			Horizontal Pressures				Vertical Pressures				Overhangs	
			A	B	C	D	E	F	G	H	EOH	GOH
130	0 to 5°	1	26.8	–13.9	17.8	–8.2	–32.2	–18.3	–22.4	–14.2	–45.1	–35.3
	10°	1	30.2	–12.5	20.1	–7.3	–32.2	–19.7	–22.4	–15.1	–45.1	–35.3
	15°	1	33.7	–11.2	22.4	–6.4	–32.2	–21.0	–22.4	–16.1	–45.1	–35.3
	20°	1	37.1	–9.8	24.7	–5.4	–32.2	–22.4	–22.4	–17.0	–45.1	–35.3
	25°	1	33.6	5.4	24.3	5.5	–14.9	–20.4	–10.8	–16.4	–27.8	–23.7
		2	—	—	—	—	–5.7	–11.1	–1.5	–7.1	—	—
	30 to 45	1	30.1	20.6	24.0	16.5	2.3	–18.3	0.8	–15.7	–10.6	–12.1
		2	30.1	20.6	24.0	16.5	11.6	–9.0	10.0	–6.4	–10.6	–12.1
140	0 to 5°	1	31.1	–16.1	20.6	–9.6	–37.3	–21.2	–26.0	–16.4	–52.3	–40.9
	10°	1	35.1	–14.5	23.3	–8.5	–37.3	–22.8	–26.0	–17.5	–52.3	–40.9
	15°	1	39.0	–12.9	26.0	–7.4	–37.3	–24.4	–26.0	–18.6	–52.3	–40.9
	20°	1	43.0	–11.4	28.7	–6.3	–37.3	–26.0	–26.0	–19.7	–52.3	–40.9
	25°	1	39.0	6.3	28.2	6.4	–17.3	–23.6	–12.5	–19.0	–32.3	–27.5
		2	—	—	—	—	–6.6	–12.8	–1.8	–8.2	—	—
	30 to 45	1	35.0	23.9	27.8	19.1	2.7	–21.2	0.9	–18.2	–12.3	–14.0
		2	35.0	23.9	27.8	19.1	13.4	–10.5	11.7	–7.5	–12.3	–14.0
150	0 to 5°	1	35.7	–18.5	23.7	–11.0	–42.9	–24.4	–29.8	–18.9	–60.0	–47.0
	10°	1	40.2	–16.7	26.8	–9.7	–42.9	–26.2	–29.8	–20.1	–60.0	–47.0
	15°	1	44.8	–14.9	29.8	–8.5	–42.9	–28.0	–29.8	–21.4	–60.0	–47.0
	20°	1	49.4	–13.0	32.9	–7.2	–42.9	–29.8	–29.8	–22.6	–60.0	–47.0
	25°	1	44.8	7.2	32.4	7.4	–19.9	–27.1	–14.4	–21.8	–37.0	–31.6
		2	—	—	—	—	–7.5	–14.7	–2.1	–9.4	—	—
	30 to 45	1	40.1	27.4	31.9	22.0	3.1	–24.4	1.0	–20.9	–14.1	–16.1
		2	40.1	27.4	31.9	22.0	15.4	–12.0	13.4	–8.6	–14.1	–16.1
160	0 to 5°	1	40.6	–21.1	26.9	–12.5	–48.8	–27.7	–34.0	–21.5	–68.3	–53.5
	10°	1	45.8	–19.0	30.4	–11.1	–48.8	–29.8	–34.0	–22.9	–68.3	–53.5
	15°	1	51.0	–16.9	34.0	–9.6	–48.8	–31.9	–34.0	–24.3	–68.3	–53.5
	20°	1	56.2	–14.8	37.5	–8.2	–48.8	–34.0	–34.0	–25.8	–68.3	–53.5
	25°	1	50.9	8.2	36.9	8.4	–22.6	–30.8	–16.4	–24.8	–42.1	–35.9
		2*	—	—	—	—	–8.6	–16.8	–2.3	–10.7	—	—
	30 to 45	1	45.7	31.2	36.3	25.0	3.5	–27.7	1.2	–23.8	–16.0	–18.3
		2*	45.7	31.2	36.3	25.0	17.6	–13.7	15.2	–9.8	–16.0	–18.3
170	0 to 5°	1	45.8	–23.8	30.4	–14.1	–55.1	–31.3	–38.3	–24.2	–77.1	–60.4
	10°	1	51.7	–21.4	34.4	–12.5	–55.1	–33.6	–38.3	–25.8	–77.1	–60.4
	15°	1	57.6	–19.1	38.3	–10.9	–55.1	–36.0	–38.3	–27.5	–77.1	–60.4
	20°	1	63.4	–16.7	42.3	–9.3	–55.1	–38.3	–38.3	–29.1	–77.1	–60.4
	25°	1	57.5	9.3	41.6	9.5	–25.6	–34.8	–18.5	–28.0	–47.6	–40.5
		2*	—	—	—	—	–9.7	–18.9	–2.6	–12.1	—	—
	30 to 45	1	51.5	35.2	41.0	28.2	4.0	–31.3	1.3	–26.9	–18.1	–20.7
		2*	51.5	35.2	41.0	28.2	19.8	–15.4	17.2	–11.0	–18.1	–20.7

FIGURE 28.5-1 (*Continued*). Main Wind Force Resisting System, Part 2 [$h \leq 60$ ft ($h \leq 18.3$ m)]: Design Wind Pressures for Enclosed Buildings—Walls and Roofs

continues

Diagrams

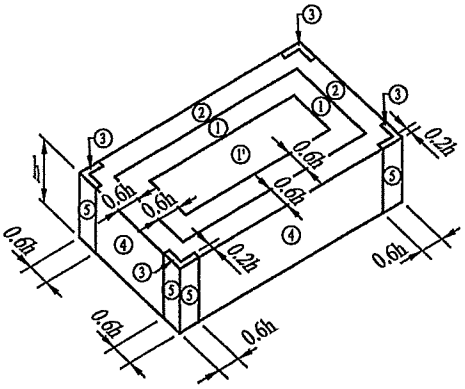

Flat/Hip/Gable ($0° \le \Theta \le 7°$)

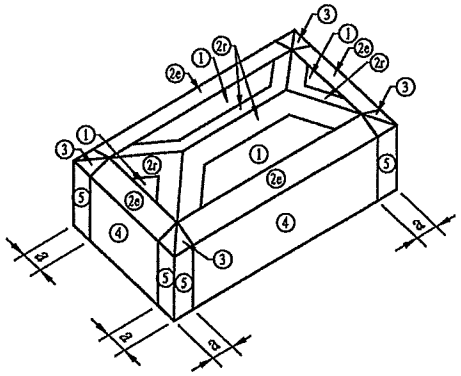

Hip Roof ($7° \le \Theta \le 45°$)

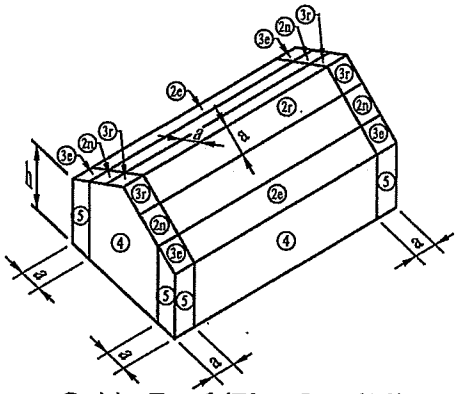

Gable Roof ($7° < \Theta \le 45°$)

APPROVED: STATE OF CA - CERTIFIED DAA
Based on the requirements of title 25 California code of regulations
Chapter 3 subchapter 2 Commercial Modular
Date: 04-25-2023 Expires: 07-31-2024
Approval # PFS: 23-002714
THIS APPROVAL DOES NOT AUTHORIZE OR APPROVE ANY OMISSION OR DEVIATION FROM THE REQUIREMENTS OF STATE LAWS OR APPLICABLE LOCAL ORDINANCES . THIS APPROVAL IS LIMITED TO FACTORY-BUILT PORTION ONLY.
PFS CORPORATION - Cottage Grove, WI

Notation

a = 10% of least horizontal dimension or $0.4h$, whichever is smaller, but not less than either 4% of least horizontal dimension or 3 ft (0.9 m).

Exception: For buildings with $\theta = 0°$ to 7° and a least horizontal dimension greater than 300 ft (90 m), dimension a shall be limited to a maximum of 0.8 h.

h = Mean roof height, in ft (m), except that eave height shall be used for roof angles <10°.

θ = Angle of plane of roof from horizontal, in degrees.

Notes

1. Pressures shown are applied normal to the surface, for Exposure B, at h = 30 ft (9.1 m). Adjust to other conditions using Eq. (30.4-1).
2. Plus and minus signs signify pressures acting toward and away from the surfaces, respectively.
3. For hip roofs with $\theta \le 25°$, Zone 3 shall be treated as Zone 2e and 2r.
4. For effective wind areas between those given, values may be in terpolated; otherwise use the value associated with the lower effective wind area.
5. If overhangs exist, the lesser horizontal dimension of the building shall not include any overhang dimension, but the edge distance, a, shall be measured from the outside edge of the overhang.

FIGURE 30.4-1 Components and Cladding, Part 2 [$h \le 60$ ft ($h \le 18.3$ m)]: Design Wind Pressures for Enclosed Buildings—Walls and Roofs

continues

APPROVED: STATE OF CA - CERTIFIED DAA
Based on the requirements of title 25 California code of regulations
Chapter 3 subchapter 2 Commercial Modular
Date: 04-25-2023 Expires: 07-31-2024
Approval # PFS: 23-002714
THIS APPROVAL DOES NOT AUTHORIZE OR APPROVE ANY OMISSION OR DEVIATION FROM THE REQUIREMENTS OF STATE LAWS OR APPLICABLE LOCAL ORDINANCES . THIS APPROVAL IS LIMITED TO FACTORY-BUILT PORTION ONLY.
PFS CORPORATION - Cottage Grove, WI

Net Design Wind Pressure, p_{net30}, in lb/ft², for Exposure B at h = 30 ft, V= 95–130 mph

	Zone	Effective Wind Area (ft²)	Basic Wind Speed (mph) 95	100	105	110	115	120	130
Walls	4	10	16.2 –17.6	18.0 –19.5	19.8 –21.5	21.8 –23.6	23.8 –25.8	25.9 –28.1	30.4 –33.0
	4	20	15.5 –16.9	17.2 –18.7	18.9 –20.6	20.8 –22.6	22.7 –24.7	24.7 –26.9	29.0 –31.6
	4	50	14.5 –15.9	16.1 –17.6	17.8 –19.4	19.5 –21.3	21.3 –23.3	23.2 –25.4	27.2 –29.8
	4	100	13.8 –15.2	15.3 –16.8	16.9 –18.5	18.5 –20.4	20.2 –22.2	22.0 –24.2	25.9 –28.4
	5	10	16.2 –21.7	18.0 –24.1	19.8 –26.6	21.8 –29.1	23.8 –31.9	25.9 –34.7	30.4 –40.7
	5	20	15.5 –20.3	17.2 –22.5	18.9 –24.8	20.8 –27.2	22.7 –29.7	24.7 –32.4	29.0 –38.0
	5	50	14.5 –18.3	16.1 –20.3	17.8 –22.4	19.5 –24.6	21.3 –26.9	23.2 –29.3	27.2 –34.3
	5	100	13.8 –16.9	15.3 –18.7	16.9 –20.6	18.5 –22.6	20.2 –24.7	22.0 –26.9	25.9 –31.6
Flat/Hip/Gable Roof 0 to 7 Degrees	1	10	6.6 –25.9	7.3 –28.7	8.1 –31.6	8.9 –34.7	9.7 –37.9	10.5 –41.3	12.4 –48.4
	1	20	6.2 –24.2	6.9 –26.8	7.6 –29.5	8.3 –32.4	9.1 –35.4	9.9 –38.5	11.6 –45.2
	1	50	5.6 –21.9	6.3 –24.3	6.9 –26.8	7.6 –29.4	8.3 –32.1	9.0 –34.9	10.6 –41.0
	1	100	5.2 –20.2	5.8 –22.4	6.4 –24.7	7.0 –27.1	7.7 –29.6	8.3 –32.2	9.8 –37.8
	1′	10	6.6 –14.9	7.3 –16.5	8.1 –18.2	8.9 –19.9	9.7 –21.8	10.5 –23.7	12.4 –27.8
	1′	20	6.2 –14.9	6.9 –16.5	7.6 –18.2	8.3 –19.9	9.1 –21.8	9.9 –23.7	11.6 –27.8
	1′	50	5.6 –14.9	6.3 –16.5	6.9 –18.2	7.6 –19.9	8.3 –21.8	9.0 –23.7	10.6 –27.8
	1′	100	5.2 –14.9	5.8 –16.5	6.4 –18.2	7.0 –19.9	7.7 –21.8	8.3 –23.7	9.8 –27.8
	2	10	6.6 –34.1	7.3 –37.8	8.1 –41.7	8.9 –45.7	9.7 –50.0	10.5 –54.4	12.4 –63.9
	2	20	6.2 –31.9	6.9 –35.4	7.6 –39.0	8.3 –42.8	9.1 –46.8	9.9 –50.9	11.6 –59.8
	2	50	5.6 –29.0	6.3 –32.2	6.9 –35.5	7.6 –38.9	8.3 –42.5	9.0 –46.3	10.6 –54.4
	2	100	5.2 –26.8	5.8 –29.7	6.4 –32.8	7.0 –36.0	7.7 –39.3	8.3 –42.8	9.8 –50.2
	3	10	6.6 –46.5	7.3 –51.5	8.1 –56.8	8.9 –62.3	9.7 –68.1	10.5 –74.2	12.4 –87.1
	3	20	6.2 –42.1	6.9 –46.7	7.6 –51.4	8.3 –56.5	9.1 –61.7	9.9 –67.2	11.6 –78.9
	3	50	5.6 –36.3	6.3 –40.2	6.9 –44.4	7.6 –48.7	8.3 –53.2	9.0 –57.9	10.6 –68.0
	3	100	5.2 –31.9	5.8 –35.4	6.4 –39.0	7.0 –42.8	7.7 –46.8	8.3 –50.9	9.8 –59.8
Gable Roof > 7 to 20 Degrees	1	10	9.8 –30.0	10.9 –33.2	12.0 –36.6	13.2 –40.2	14.4 –44.0	15.7 –47.9	18.4 –56.2
	1	20	8.9 –30.0	9.8 –33.2	10.8 –36.6	11.9 –40.2	13.0 –44.0	14.1 –47.9	16.6 –56.2
	1	50	7.6 –18.2	8.4 –20.2	9.3 –22.3	10.2 –24.5	11.1 –26.7	12.1 –29.1	14.2 –34.2
	1	100	6.6 –9.4	7.3 –10.4	8.1 –11.4	8.9 –12.5	9.7 –13.7	10.5 –14.9	12.4 –17.5
	2e	10	9.8 –30.0	10.9 –33.2	12.0 –36.6	13.2 –40.2	14.4 –44.0	15.7 –47.9	18.4 –56.2
	2e	20	8.9 –30.0	9.8 –33.2	10.8 –36.6	11.9 –40.2	13.0 –44.0	14.1 –47.9	16.6 –56.2
	2e	50	7.6 –18.2	8.4 –20.2	9.3 –22.3	10.2 –24.5	11.1 –26.7	12.1 –29.1	14.2 –34.2
	2e	100	6.6 –9.4	7.3 –10.4	8.1 –11.4	8.9 –12.5	9.7 –13.7	10.5 –14.9	12.4 –17.5
	2n	10	9.8 –43.8	10.9 –48.5	12.0 –53.4	13.2 –58.7	14.4 –64.1	15.7 –69.8	18.4 –81.9
	2n	20	8.9 –37.8	9.8 –41.9	10.8 –46.2	11.9 –50.7	13.0 –55.4	14.1 –60.4	16.6 –70.8
	2n	50	7.6 –30.0	8.4 –33.2	9.3 –36.6	10.2 –40.2	11.1 –44.0	12.1 –47.9	14.2 –56.2
	2n	100	6.6 –24.1	7.3 –26.7	8.1 –29.4	8.9 –32.3	9.7 –35.3	10.5 –38.4	12.4 –45.1
	2r	10	9.8 –43.8	10.9 –48.5	12.0 –53.4	13.2 –58.7	14.4 –64.1	15.7 –69.8	18.4 –81.9
	2r	20	8.9 –37.8	9.8 –41.9	10.8 –46.2	11.9 –50.7	13.0 –55.4	14.1 –60.4	16.6 –70.8
	2r	50	7.6 –30.0	8.4 –33.2	9.3 –36.6	10.2 –40.2	11.1 –44.0	12.1 –47.9	14.2 –56.2
	2r	100	6.6 –24.1	7.3 –26.7	8.1 –29.4	8.9 –32.3	9.7 –35.3	10.5 –38.4	12.4 –45.1
	3e	10	9.8 –43.8	10.9 –48.5	12.0 –53.4	13.2 –58.7	14.4 –64.1	15.7 –69.8	18.4 –81.9
	3e	20	8.9 –37.8	9.8 –41.9	10.8 –46.2	11.9 –50.7	13.0 –55.4	14.1 –60.4	16.6 –70.8
	3e	50	7.6 –30.0	8.4 –33.2	9.3 –36.6	10.2 –40.2	11.1 –44.0	12.1 –47.9	14.2 –56.2
	3e	100	6.6 –24.1	7.3 –26.7	8.1 –29.4	8.9 –32.3	9.7 –35.3	10.5 –38.4	12.4 –45.1
	3r	10	9.8 –52.0	10.9 –57.6	12.0 –63.5	13.2 –69.7	14.4 –76.2	15.7 –83.0	18.4 –97.4
	3r	20	8.9 –44.6	9.8 –49.4	10.8 –54.4	11.9 –59.7	13.0 –65.3	14.1 –71.1	16.6 –83.4
	3r	50	7.6 –34.7	8.4 –38.4	9.3 –42.4	10.2 –46.5	11.1 –50.8	12.1 –55.4	14.2 –65.0
	3r	100	6.6 –27.2	7.3 –30.2	8.1 –33.3	8.9 –36.5	9.7 –39.9	10.5 –43.5	12.4 –51.0

Notes: Plus and minus signs signify pressures acting toward and away from the surfaces, respectively. For effective wind areas between those given above, the load may be interpolated; otherwise, use the load associated with the lower effective area. Gray shading indicates that the final value, including all permitted reductions, used in the design shall not be less than that required by Section 30.2.2.

Metric conversions: 1.0 ft = 0.3048 m; 1.0 ft² = 0.0929 m²; 1.0 lb/ft² = 0.0479 kN/m².

FIGURE 30.4-1 (*Continued*). Components and Cladding, Part 2 [$h \leq 60$ ft ($h \leq 18.3$ m)]: Design Wind Pressures for Enclosed Buildings—Walls and Roofs

continues

Net Design Wind Pressure for Roof Overhang, p_{net30}, in lb/ft^2, for Exposure B at h = 30 ft, V= 95–200 mph

	Zone	Effective Wind Area (ft^2)	Wind Speed (mph)													
			95	100	105	110	115	120	130	140	150	160	170	180	190	200
Hip Roof > 27 to 45 Degrees	1	10	–31.6	–35.1	–38.7	–42.4	–46.4	–50.5	–59.3	–68.7	–78.9	–89.8	–101.3	–113.6	–126.6	–140.3
	1	20	–29.1	–32.2	–35.5	–39.0	–42.6	–46.4	–54.5	–63.2	–72.5	–82.5	–93.2	–104.5	–116.4	–129.0
	1	50	–25.7	–28.5	–31.4	–34.5	–37.7	–41.1	–48.2	–55.9	–64.1	–73.0	–82.4	–92.4	–102.9	–114.0
	1	100	–23.2	–25.7	–28.3	–31.1	–34.0	–37.0	–43.4	–50.4	–57.8	–65.8	–74.2	–83.2	–92.7	–102.8
	2e	10	–38.1	–42.3	–46.6	–51.1	–55.9	–60.9	–71.4	–82.8	–95.1	–108.2	–122.1	–136.9	–152.6	–169.0
	2e	20	–31.6	–35.0	–38.6	–42.3	–46.3	–50.4	–59.1	–68.6	–78.7	–89.6	–101.1	–113.4	–126.3	–140.0
	2e	50	–22.9	–25.4	–28.0	–30.7	–33.6	–36.6	–42.9	–49.8	–57.1	–65.0	–73.4	–82.3	–91.7	–101.6
	2e	100	–22.0	–24.4	–26.9	–29.5	–32.3	–35.1	–41.2	–47.8	–54.9	–62.4	–70.5	–79.0	–88.1	–97.6
	2r	10	–46.1	–51.1	–56.3	–61.8	–67.5	–73.5	–86.3	–100.1	–114.9	–130.7	–147.6	–165.5	–184.4	–204.3
	2r	20	–39.7	–44.0	–48.5	–53.2	–58.1	–63.3	–74.3	–86.2	–98.9	–112.5	–127.0	–142.4	–158.7	–175.8
	2r	50	–31.2	–34.6	–38.1	–41.8	–45.7	–49.8	–58.4	–67.7	–77.7	–88.5	–99.9	–112.0	–124.7	–138.2
	2r	100	–24.8	–27.4	–30.3	–33.2	–36.3	–39.5	–46.4	–53.8	–61.7	–70.2	–79.3	–88.9	–99.1	–109.8
	3	10	–45.2	–50.1	–55.3	–60.6	–66.3	–72.2	–84.7	–98.2	–112.8	–128.3	–144.8	–162.4	–180.9	–200.5
	3	20	–36.4	–40.3	–44.5	–48.8	–53.4	–58.1	–68.2	–79.1	–90.8	–103.3	–116.6	–130.7	–145.7	–161.4
	3	50	–24.8	–27.4	–30.3	–33.2	–36.3	–39.5	–46.4	–53.8	–61.7	–70.2	–79.3	–88.9	–99.1	–109.8
	3	100	–24.8	–27.4	–30.3	–33.2	–36.3	–39.5	–46.4	–53.8	–61.7	–70.2	–79.3	–88.9	–99.1	–109.8

Note: Plus and minus signs signify pressures acting toward and away from the surfaces, respectively.
Metric conversions: 1.0 ft = 0.3048 m; 1.0 ft^2 = 0.0929 m^2; 1.0 lb/ft^2 = 0.0479 kN/m^2.

Adjustment Factor for Building Height and Exposure, λ

Mean Roof Height (ft)	Exposure B	Exposure C	Exposure D
15	0.82	1.21	1.47
20	0.89	1.29	1.55
30	1.00	1.40	1.66
35	1.05	1.45	1.70
40	1.09	1.49	1.74
45	1.12	1.53	1.78
50	1.16	1.56	1.81
55	1.19	1.59	1.84
60	1.22	1.62	1.87

Note: Metric conversions: 1.0 ft = 0.3048 m; 1.0 ft^2 = 0.0929 m^2; 1.0 lb/ft^2 = 0.0479 kN/m^2.

APPROVED: STATE OF CA - CERTIFIED DAA
Based on the requirements of title 25 California code of regulations
Chapter 3 subchapter 2 Commercial Modular
Date: 04-25-2023 Expires: 07-31-2024
Approval # PFS: 23-002714
THIS APPROVAL DOES NOT AUTHORIZE OR APPROVE ANY OMISSION OR DEVIATION FROM THE REQUIREMENTS OF STATE LAWS OR APPLICABLE LOCAL ORDINANCES . THIS APPROVAL IS LIMITED TO FACTORY-BUILT PORTION ONLY.
PFS CORPORATION - Cottage Grove, WI

FIGURE 30.4-1 (*Continued*). Components and Cladding, Part 2 [$h \leq 60$ ft ($h \leq 18.3$ m)]: Design Wind Pressures for Enclosed Buildings—Walls and Roofs

Table 30.5-1 Steps to Determine C&C Wind Loads for Enclosed or Partially Enclosed Building with $h > 60$ ft ($h > 18.3$ m)

Step 1: Determine risk category; see Table 1.5-1.
Step 2: Determine the basic wind speed, V, for applicable risk category; see Figs. 26.5-1 and 26.5-2.
Step 3: Determine wind load parameters:
- Wind directionality factor, K_d; see Section 26.6 and Table 26.6-1.
- Exposure category B, C, or D; see Section 26.7.
- Topographic factor, K_{zt}; see Section 26.8 and Fig. 26.8-1.
- Ground elevation factor, K_e; see Section 26.9 and Table 26.9-1
- Enclosure classification; see Section 26.12.
- Internal pressure coefficient, (GC_{pi}); see Section 26.13 and Table 26.13-1.

Step 4: Determine velocity pressure exposure coefficient, K_z or K_h; see Table 26.10-1.
Step 5: Determine velocity pressure, q, Eq. (26.10-1).
Step 6: Determine external pressure coefficient, (GC_p):
- Walls and flat roofs ($\theta < 10°$), see Fig. 30.5-1
- Gable and hip roofs, see Fig. 30.3-2 per Note 6 of Fig. 30.5-1
- Arched roofs, see Fig. 27.3-3, Note 4
- Domed roofs, see Fig. 30.3-7

Step 7: Calculate wind pressure, p, Eq. (30.5-1).

H2A ENGINEERING, INC.

CLIENT VFP, INC.
PROJECT

DEAD LOADS

DATE 11/18/09
JOB NO. 114-D
BY BKY
PAGE 1.9

REV. 3/9/12

STANDARD WALL PAN 24" x 18ga. SHEET COVERS 16" ✓

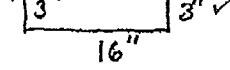

18ga = .052"

$$\frac{.052" \times 24" \times 12"}{12^3} \times 500\#/FT^3 = \frac{4.33}{5.29}\ \#/PAN$$

REV. 6/5/19

$$\frac{4.33}{5.29\ \#/PAN} \times \frac{12"}{16"} = \frac{3.25\ \#/SF}{3.97\ \#/SF.}$$

USE 4 PSF ✓

ROOF PAN

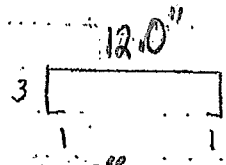

18g x 20.0" WIDE SHEET

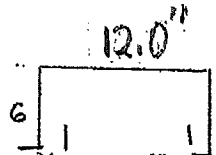

18g x 26.0" WIDE SHEET

$$\frac{.050" \times 20.0" \times 12"}{12^3} \times 500\#/FT^3 = 3.5\ PSF$$

$$\frac{.050" \times 26.0" \times 12"}{12^3} \times 500\#/FT^3 = 4.5\ PSF$$

INTERIOR FINISHES NUPOLY 1.5 PSF WALLS & CEILING

EXTERIOR ROCK STENNI PANEL 3.25 PSF

APPROVED: STATE OF CA - CERTIFIED DAA
Based on the requirements of title 25 California code of regulations
Chapter 3 subchapter 2 Commercial Modular
Date: 04-25-2023 Expires: 07-31-2024
Approval # PFS: 23-002714
THIS APPROVAL DOES NOT AUTHORIZE OR APPROVE ANY OMISSION OR DEVIATION FROM THE REQUIREMENTS OF STATE LAWS OR APPLICABLE LOCAL ORDINANCES . THIS APPROVAL IS LIMITED TO FACTORY-BUILT PORTION ONLY.
PFS CORPORATION - Cottage Grove, WI

VFP, Inc.; Corporate Office; 5410 Fallowater Lane; Roanoke, VA 24018; Manufacturing Facility; 402 Industrial Park Road; Duffield, VA 24244

D2A ENGINEERING, INC.

CLIENT VFP, INC
PROJECT
DEAD LOADS

DATE 11/30/09
JOB NO. 140
BY BKY
PAGE 1.10

REV. 3/9/12
REV. 6/5/19

BUILDING WEIGHTS

FLOOR SKID ASSEMBLY

FOR 30' BUILDING x 12' WIDE

C8x11.5 — 2x30' x 11.5 = 690#

C4x5.4 — 26 x 12' x 5.4 = 1685#

1/4" FLOOR PLATE — $\frac{.25}{12}$ x 490 = 10.2 PSF x 30'x12' = 3672#

6047#

$\frac{6047\#}{30' \times 12'} = 16.8$ PSF

WALLS

PANS	4 PSF
NUPOLY	1.5 PSF
STENNI PANEL	3.25 PSF
	8.75 PSF SAY 10 ✓

ROOF

PANS	4.5 PSF
NUPOLY	1.5
	-1.5
STANDING SEAM 22 ga.	7.50 PSF SAY 10 ✓

APPROVED: STATE OF CA - CERTIFIED DAA
Based on the requirements of title 25 California code of regulations
Chapter 3 subchapter 2 Commercial Modular
Date: 04-25-2023 Expires: 07-31-2024
Approval # PFS: 23-002714
THIS APPROVAL DOES NOT AUTHORIZE OR APPROVE ANY OMISSION OR DEVIATION FROM THE REQUIREMENTS OF STATE LAWS OR APPLICABLE LOCAL ORDINANCES . THIS APPROVAL IS LIMITED TO FACTORY-BUILT PORTION ONLY.
PFS CORPORATION - Cottage Grove, WI

2A ENGINEERING, INC.

CLIENT VFP, INC.
PROJECT

DEAD LOADS

DATE 12/1/09
JOB NO. 1140
BY BKY
PAGE 1.11

REV. 3/9/12

CONCRETE FLOOR ELEMENT 30'x12' WIDE

W8x28	2x 30' x 28 PLF		1680#
W6x9	8 x 12' x 9 PLF		864#
CONCRETE	3" LWC	27 PSF x 12x30	9720#
			12264#

$\frac{12264\#}{(12)(30)} = 34.1\ PSF$

APPROVED: STATE OF CA - CERTIFIED DAA
Based on the requirements of title 25 California code of regulations
Chapter 3 subchapter 2 Commercial Modular
Date: 04-25-2023 Expires: 07-31-2024
Approval # PFS: 23-002714
THIS APPROVAL DOES NOT AUTHORIZE OR APPROVE ANY OMISSION OR DEVIATION FROM THE REQUIREMENTS OF STATE LAWS OR APPLICABLE LOCAL ORDINANCES . THIS APPROVAL IS LIMITED TO FACTORY-BUILT PORTION ONLY.
PFS CORPORATION - Cottage Grove, WI

APPROVED: STATE OF CA - CERTIFIED DAA
Based on the requirements of title 25 California code of regulations
Chapter 3 subchapter 2 Commercial Modular
Date: 04-25-2023 Expires: 07-31-2024
Approval # PFS-23-002714
THIS APPROVAL DOES NOT AUTHORIZE OR APPROVE ANY OMISSION OR DEVIATION FROM THE REQUIREMENTS OF STATE LAWS OR APPLICABLE LOCAL ORDINANCES . THIS APPROVAL IS LIMITED TO FACTORY-BUILT PORTION ONLY.
PFS CORPORATION - Cottage Grove, WI

KH2A ENGINEERING, INC. — MEMBER PROPERTIES

DATE 9/25/15
JOB NO 1140
BY BKY
PAGE 2.1

ROOF PANS

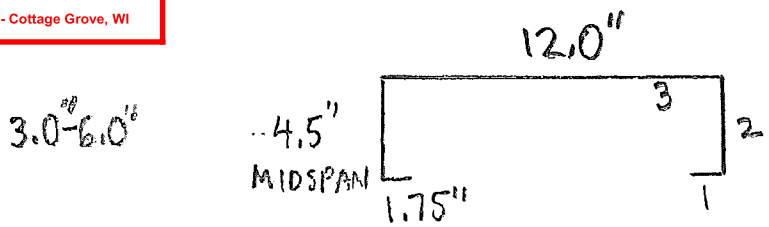

WIDTH TO THICKNESS RATIOS

(NORTH AMERICAN SPECIFICATION FOR THE DESIGN OF COLD-FORMED STEEL STRUCTURAL MEMBERS)

EFFECTIVE WIDTH METHOD

LOCATION	WIDTH	THICKNESS	$\frac{w}{t}$	MAX. $\frac{w}{t}$
1	1.75"	.050	35	< 60 ✓
	3.0	.050	60	< 500 ✓
2	4.5"	.050	90	< 500 ✓
	6.0	.050	120	< 500 ✓
3	12.0"	.050	240	< 500 ✓

EFFECTIVE WIDTH OF TOP STIFFENED FLANGE

App.1 AISI S100

$$\lambda = \sqrt{\frac{f}{F_{crl}}} \qquad (1\text{-}1.3)$$

$$F_{crl} = k\frac{\pi^2 E}{12(1-\mu^2)}\left(\frac{t}{w}\right)^2 = (4)\frac{\pi^2(29\times10^3\ psi)}{12(1-.3^2)}\left(\frac{.050}{12.0}\right)^2 = 1818\ psi \qquad (1\text{-}1.4)$$

(.91)

$$\lambda = \sqrt{\frac{31.3\ ksi}{1.82\ ksi}} = 4.15 > .673$$

$$\rho = \frac{1 - \frac{.22}{4.15}}{4.15} = .23$$

$$b = \rho w = (.23)(12.0") = 2.76"$$

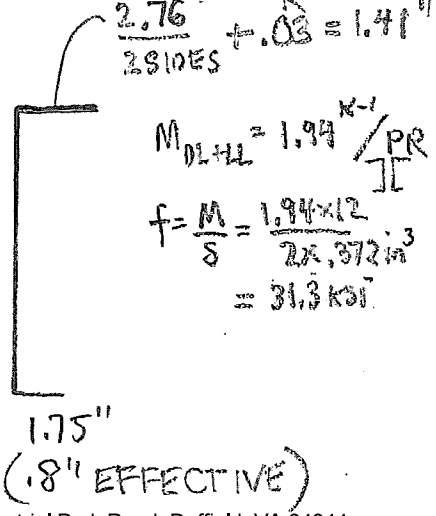

KH2A ENGINEERING, INC.

CLIENT VFP, INC
PROJECT

APPROVED: STATE OF CA - CERTIFIED DAA
Based on the requirements of title 25 California code of regulations
Chapter 3 subchapter 2 Commercial Modular
Date: 04-25-2023 Expires: 07-31-2024
Approval # PFS: 23-002714
THIS APPROVAL DOES NOT AUTHORIZE OR APPROVE ANY OMISSION OR DEVIATION FROM THE REQUIREMENTS OF STATE LAWS OR APPLICABLE LOCAL ORDINANCES . THIS APPROVAL IS LIMITED TO FACTORY-BUILT PORTION ONLY.
PFS CORPORATION - Cottage Grove, WI

DATE 9/25/15
JOB NO. 1140
BY BKY
PAGE 2.2

EFFECTIVE WIDTH OF BOTTOM UNSTIFFENED FLANGE

$K = .43$

$t = .050"$

$w = 1.75"$

$$F_{crL} = .43\,\frac{\pi^2\,(29\times10^6\ psi)}{12(1-\mu^2)}\left(\frac{.050}{1.75}\right)^2 = 9.2\ ksi$$

$$\lambda = \sqrt{\frac{29.4}{9.2}} = 1.79$$

$$f = \frac{M}{S}_{DL+LL} = \frac{1.94\times12}{2\times.396} = 29.4\ ksi$$

$$\rho = \frac{1-\frac{.22}{1.79}}{1.79} = .50$$

$$b_b = 1.75" \times .50 = .88"$$

$.88" + .03^{R} = .91"$ EFFECTIVE WIDTH BOTTOM FLANGE

WEBS AND OTHER STIFFENED ELEMENTS UNDER STRESS GRADIENT

$$k = 4+2(1+\psi)^3+2(1+\psi) \qquad (1.1.2\text{-}2)$$

$h_o = 4.5"$ $\qquad \frac{h_o}{b_o} = 4.5 > 4$

$b_o = 1.0"$

$$\psi = \left|\frac{f_2}{f_1}\right| = \left|\frac{37}{37}\right| = 1 > .236$$

APPROVED: STATE OF CA - CERTIFIED DAA
Page 45 of 126
Based on the 2019 California code of regulations
Chapter 3 subchapter 2 Commercial Modular
Date: 04-25-2023 Expires: 07-31-2024
Approval # PFS: 23-002714
THIS APPROVAL DOES NOT AUTHORIZE OR APPROVE ANY OMISSION OR DEVIATION FROM THE REQUIREMENTS OF STATE LAWS OR APPLICABLE LOCAL ORDINANCES . THIS APPROVAL IS LIMITED TO FACTORY-BUILT PORTION ONLY.
PFS CORPORATION - Cottage Grove, WI

KH2A ENGINEERING, INC.

CLIENT VFP, INC
PROJECT

DATE 9/25/15
JOB NO. 1140
BY BKY
PAGE 2.3

$K = 4 + 2(1+1.0)^3 + 2(1+1.0) = 24.0$

$b_e = 3.83"$

$b_1 = \frac{b_e}{(3+4)} = \frac{3.83"}{(3+1)} = .96"$ LIMIT TO .3"

$b_2 = \frac{b_e}{2} = \frac{3.83"}{2} = 1.92"$

$F_{crl} = 24 \frac{\pi^2 29000}{12(1-.3)^2}\left(\frac{.050}{4.5}\right)^2 = 37.5\ ksi$

$\lambda = \sqrt{\frac{29.4}{37.5}} = .89 > .673$

$\rho = \frac{1 - .22/\lambda}{\lambda} = .85$

$b_e = \rho w = .85 \times 4.5 = 3.83$

$b_1 + b_2 + R = .3" + 1.92" + .03" = 2.25" < \frac{4.5"}{2} = 2.25"$

NET EFFECTIVE SECTION

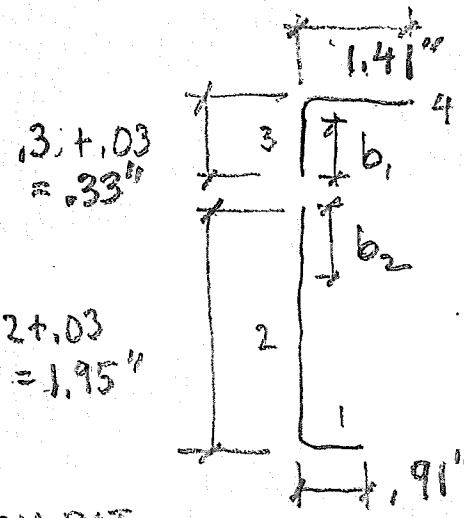

ELEMENT	AREA	FROM BOT y	Ay	I_o	$I = Ad^2$
1	.036	0	0	—	.176
2	.098	.975	.096	.030	.149
3	.017	4.34	.074	.0001	.077
4	.071	4.5	.320	—	.372
	.222		.490		.804

$\bar{y} = \frac{.490}{.222} = 2.21"$ UP, CLOSE TO 2.25"

$I = .804 + .222(2.21)^2 = .804 + .222(4.5 - 2.21)^2$

KH2A ENGINEERING, INC.

CLIENT VFP
PROJECT

DATE 9/25/15
JOB NO. 1140
BY BKY
PAGE 2.4

ROOF PAN DEMANDS

APPROVED: STATE OF CA - CERTIFIED DAA
Based on the requirements of title 25 California code of regulations
Chapter 3 subchapter 2 Commercial Modular
Date: 04-25-2023 Expires: 07-31-2024
Approval # PFS: 23-002714
THIS APPROVAL DOES NOT AUTHORIZE OR APPROVE ANY OMISSION OR DEVIATION FROM THE REQUIREMENTS OF STATE LAWS OR APPLICABLE LOCAL ORDINANCES . THIS APPROVAL IS LIMITED TO FACTORY-BUILT PORTION ONLY.
PFS CORPORATION - Cottage Grove, WI

SPAN = 12'

DL = 8 PSF CONSERVATIVE

LL = 100 PSF

WIND = $-54.4\ \text{PSF} \times \lambda_c\ 1.21 = -65.8\ \text{PSF}$ ULT.

ZONE 2, 50' λ_c, FLAT ROOF C&C, 130 MPH

DL+LL

DL+LL = 110 PSF

$M = (108\ \text{PSF})\left(\frac{12''}{12''/'}\right)(12')^2/8 = 1.94^{K-'}$ PER PAIR EFF. SECT.][

$V = (108\ \text{PSF})\left(\frac{12'}{12}\right)(12')/2 = .65^{K}$ PER PAIR EFF. SECT.][

$\frac{M_n}{\Omega_b} = \frac{(2)(S_e)(F_y)}{1.67} = \frac{(2)(.351)(50\ \text{ksi})}{1.67} = 21.0^{K-''} = 1.9^{K-'} \approx 1.94$ ✓ FLEXURE OK

$F_{cr} = \frac{\pi^2 E k_v}{12(1-\mu)^2\left(\frac{h}{t}\right)^2} = \frac{3.14^2 \times 29000 \times 5.34}{12(1-.3^2)(60)^2} = 38.8\ \text{ksi}$

$\frac{h}{t} = \frac{3.0}{.050} = 60$

$\lambda_v = \sqrt{\frac{4.5}{5.9}} = .87 > .587$

$V_{cr} = A_w F_{cr} = 3' \times .05'' \times 39 = 5.9^{K}$

$V_y = .6 \times 3 \times .05 \times 50 = 4.5^{K}$

$V_n = \left[1 - .25\left(\frac{V_{cr}}{V_y}\right)^{.65}\right]\left(\frac{V_{cr}}{V_y}\right)^{.65} V_y = 3.75^{K}$

$\frac{V_n}{1.67} = 2.24^{K} > .70 > .65^{K}$ ✓ SHEAR OK

$\Delta = .6'' \quad \frac{\ell}{240}$ FROM TEST DATA P. 58 OF 116 ✓ DEFLECTION OK

KH2A ENGINEERING, INC.

CLIENT VFP
PROJECT

DATE 9/25/15
JOB NO. 1140
BY BKY
PAGE 2.5

3/15/23

DL + WIND UPLIFT x .6

$W = +10\,PSF - .6(-65.8\,PSF) = -29.5\,PSF$ (ASD)

$M = (-29.5\,PSF)\left(\frac{12''}{12''/'}\right)(12')^2/8 = .531^{K-'}$ (ASD)

$V = (-29.5\,PSF)\left(\frac{12}{12}\right)(12')/2 = .177^{K}$ (ASD)

$\frac{Mn}{\Omega_b} = \frac{(2)(Se)(F_y)}{\Omega_b} = \frac{(2)(.351)(50)}{1.67} = 21.0^{K-''} = 1.75^{K-'} > .53^{K-'}$ ✓

$\frac{Vn}{\Omega_v} = \frac{.904\,E\,k_v\,A_w}{\left(\frac{h}{t}\right)^2\Omega_v} = \frac{.904 \times 29\times10^6 \times 5.34 \times 2 \times .115}{(90)^2\,1.6}$ EF $= 2.5^{K} > .18^{K}$ ✓

P.58 OF 116 TEST DATA

$\Delta = -29.5\,PSF \times \frac{-1.1''}{160\,PSF} = -.20'' \quad \frac{\ell}{710}$ ✓

APPROVED: STATE OF CA - CERTIFIED DAA
Based on the requirements of title 25 California code of regulations
Chapter 3 subchapter 2 Commercial Modular
Date: 04-25-2023 Expires: 07-31-2024
Approval # PFS: 23-002714
THIS APPROVAL DOES NOT AUTHORIZE OR APPROVE ANY OMISSION OR DEVIATION FROM THE REQUIREMENTS OF STATE LAWS OR APPLICABLE LOCAL ORDINANCES . THIS APPROVAL IS LIMITED TO FACTORY-BUILT PORTION ONLY.
PFS CORPORATION - Cottage Grove, WI

3/13/23

2.6

APPROVED: STATE OF CA - CERTIFIED DAA

Based on the requirements of title 25 California code of regulations
Chapter 3 subchapter 2 Commercial Modular

Date: 04-25-2023 Expires: 07-31-2024

Approval # PFS: 23-002714

THIS APPROVAL DOES NOT AUTHORIZE OR APPROVE ANY OMISSION OR DEVIATION FROM THE REQUIREMENTS OF STATE LAWS OR APPLICABLE LOCAL ORDINANCES . THIS APPROVAL IS LIMITED TO FACTORY-BUILT PORTION ONLY.

PFS CORPORATION - Cottage Grove, WI

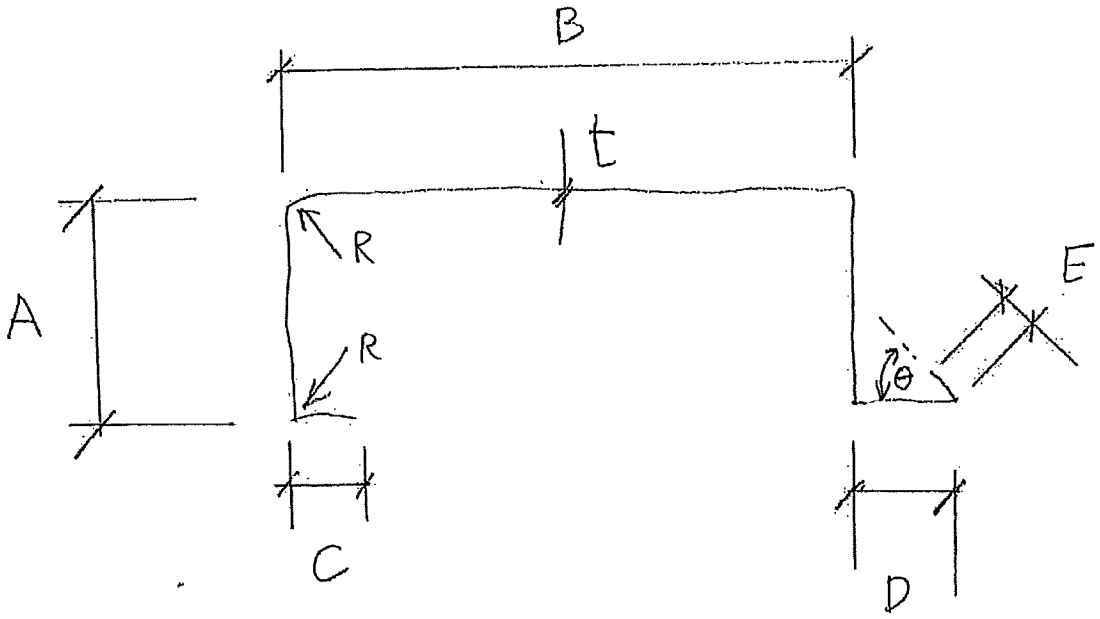

PLEASE DEFINE FOR ROOF C-PANS & WALL C-PANS

	ROOF	WALLS
A =	4 + 07 12' WIDE	3
B =	12	16
C =	.775	.775
D =	1	1
E =	.33	.33
R =	I think it is .09 or .06?	
θ =	60°	60° WE CALL OUT A 120° BEND.
t =	.048" min.	.048" min.

KH2A ENGINEERING, INC.

CLIENT VFP
PROJECT

DISTORTIONAL BUCKLING

DATE 3/13/23
JOB NO 1140
BY BKY
PAGE 2.7

ROOF PAN DISTORTIONAL BUCKLING (F4)

12 PERIMETER
2 IF FIELD
NUPOLY TO PANS

APPROVED: STATE OF CA - CERTIFIED DAA
Based on the requirements of title 25 California code of regulations
Chapter 3 subchapter 2 Commercial Modular
Date: 04-25-2023 Expires: 07-31-2024
Approval # PFS: 23-002714
THIS APPROVAL DOES NOT AUTHORIZE OR APPROVE ANY OMISSION OR DEVIATION FROM THE REQUIREMENTS OF STATE LAWS OR APPLICABLE LOCAL ORDINANCES . THIS APPROVAL IS LIMITED TO FACTORY-BUILT PORTION ONLY.
PFS CORPORATION - Cottage Grove, WI

$$\lambda_d = \sqrt{\frac{M_y}{M_{crd}}}$$

$$M_{crd} = S_{fc} F_{crd}$$

$$F_{crd} = \beta \frac{\bar{K}_{\phi fe} + \bar{K}_{\phi we} + \bar{K}_{\phi}}{\tilde{K}_{\phi fg} + \tilde{K}_{\phi wg}}$$

$\bar{K}_{\phi}$ = CONTINUOUS ROTATIONAL STIFFNESS
= 1.0 SHEATHED BY NUPOLY

$\beta = 1.0$

$$\bar{K}_{\phi fe} = \left(\frac{\pi}{L_d}\right)^4 \left[E C_{wf} + E I_{xf} (X_{of} - X_{hf})^2 \left(1 - \frac{I_{xyf}^2}{I_{xf} I_{yf}}\right)\right] + \left(\frac{\pi}{L_d}\right)^2 G J_f$$

C_{wf} = FLANGE TORSIONAL WARPING CONSTANT

$G = 11,300$ ksi

I_{xf} = MOMENT OF INERTIA OF FLANGE, X-AXIS

I_{xyf} = PRODUCT OF FLANGE INERTIA ABOUT MAJOR & MINOR AXES

J_f = ST. VENANT TORSION CONSTANT OF COMPRESSION FLANGE, PLUS EDGE STIFFENER ABOUT AN X-Y AXIS LOCATED AT CENTROID OF FLANGE

L_d = MINIMUM OF L_{crd} AND L_m

L_{crd} = CRITICAL UNBRACED LENGTH OF DISTORTIONAL BUCKLING

L_m = DISTANCE BETWEEN DISCRETE RESTRAINTS THAT RESTRICT DISTORTIONAL BUCKLING.

APPROVED: STATE OF CA - CERTIFIED DAA
Based on the requirements of title 25 California code of regulations
Chapter 3 subchapter 2 Commercial Modular
Date: 04-25-2023 Expires: 07-31-2024
Approval # PFS: 23-002714
THIS APPROVAL DOES NOT AUTHORIZE OR APPROVE ANY OMISSION OR DEVIATION FROM THE REQUIREMENTS OF STATE LAWS OR APPLICABLE LOCAL ORDINANCES. THIS APPROVAL IS LIMITED TO FACTORY-BUILT PORTION ONLY.
PFS CORPORATION - Cottage Grove, WI

CLIENT

DATE 3/13/23
JOB NO. 1140
BY BKY
PAGE 2.8

ORTIONAL BUCKLING

PROPERTIES OF STIFFENED FLANGE WITH LIP

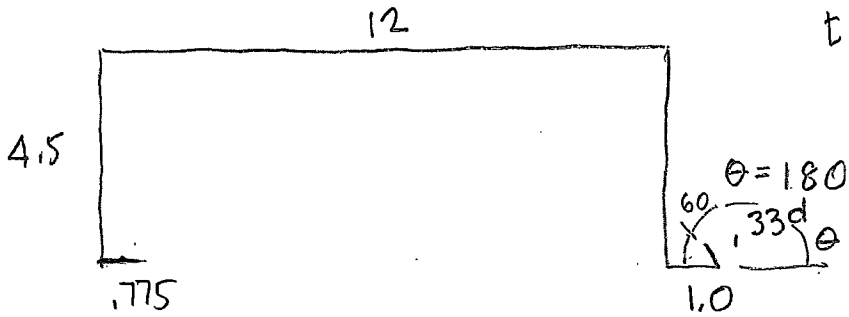

$A_f = (b+d)\,t = (1.0+.33)(.050) = .067\ in.^2$

$J_f = \frac{1}{3}bt^3 + \frac{1}{3}dt^3 = \frac{1}{3}\times 1.0\times .050^3 + \frac{1}{3}\times .33\times .050^3 = .000055\ in.^4$ (.000042, .000014)

$$I_{xf} = \frac{t\left(t^2b^2 + 4bd^3 - 4bd^3\cos^2(\theta) + t^2bd + d^4 - d^4\cos^2(\theta)\right)}{12(b+d)}$$

$$= \frac{.050\left(.050^2\times 1.0^2 + 4\times 1.0\times .33^3 - 4\times 1.0\times .33^3\times .5^2 + .050^2\times 1.0\times .33 + .33^4 - .33^4\times .5^2\right)}{12(1+.33)}$$

(.0025, .144, .036, .00083, .019, .0029)

$\cos 120^\circ = -.5$ $\qquad \sin 60 = .866$

$\cos 00 = .5$ $\qquad I_{xf} = .000377\ in.^4$ (15.96)

$$I_{yf} = \frac{t\left(b^4 + 4db^3 + 6d^2b^2\cos(\theta) + 4d^3b\cos^2(\theta) + d^4\cos^2(\theta)\right)}{12(b+d)}$$

$$= \frac{.050\left(1.0^4 + 4\times .33\times 1.0^3 + 6\times .33^2\times 1.0^2\times .5 + 4\times .33^3\times 1.0\times .5^2 + .33^4\times .50^2\right)}{12(1.33)}$$

$$= \frac{.050\left(1.0 + 1.32 + .3267 + .1089 + .0029\right)}{15.96} = .00864\ in.^4$$

$$I_{xyf} = \frac{tbd^2\sin(\theta)\left(b + d\cos(\theta)\right)}{4(b+d)} = \frac{.050\times 1.0\times .33^2\times .866\times\left(1.0 + .33\times .5\right)}{4(1.33)}$$

$= .00103\ in.^4$

$C_{wf} = 0$

$$X_{of} = \frac{b^2 - d^2\cos(\theta)}{2(b+d)} = \frac{1.0^2 - .33^2\times .5}{2(1.33)} = .3555\ in.$$

KH2A ENGINEERING, INC.

CLIENT VFP
PROJECT

DISTORTIONAL BUCKLING

DATE 3/13/23
JOB NO. 1140
BY BTH
PAGE 2.9

$$X_{hf} = -\frac{(b^2 + 2db + d^2\cos(\theta))}{2(b+d)} = -\frac{(1.0^2 + 2\times.33\times1.0 + .33^2\times.5)}{2(1.33)}$$

$$= -.6445 \text{ in.}$$

$$Y_{hf} = Y_{of} = \frac{-d^2\sin(\theta)}{2(b+d)} = \frac{-.33^2\times.866}{2(1.33)} = -.0355 \text{ in.}$$

APPROVED: STATE OF CA - CERTIFIED DAA

Based on the requirements of title 25 California code of regulations
Chapter 3 subchapter 2 Commercial Modular

Date: 04-25-2023 Expires: 07-31-2024

Approval # PFS: 23-002714

THIS APPROVAL DOES NOT AUTHORIZE OR APPROVE ANY OMISSION OR DEVIATION FROM THE REQUIREMENTS OF STATE LAWS OR APPLICABLE LOCAL ORDINANCES . THIS APPROVAL IS LIMITED TO FACTORY-BUILT PORTION ONLY.

PFS CORPORATION - Cottage Grove, WI

APPROVED: STATE OF CA - CERTIFIED DAA
Based on the requirements of title 25 California code of regulations
Chapter 3 subchapter 2 Commercial Modular
Date: 04-25-2023 Expires: 07-31-2024
Approval # PFS: 23-002714
THIS APPROVAL DOES NOT AUTHORIZE OR APPROVE ANY OMISSION OR DEVIATION FROM THE REQUIREMENTS OF STATE LAWS OR APPLICABLE LOCAL ORDINANCES. THIS APPROVAL IS LIMITED TO FACTORY-BUILT PORTION ONLY.
PFS CORPORATION - Cottage Grove, WI

DATE 3/13/23
JOB NO. 1140
BY BKY
PAGE 2.10

TORTIONAL BUCKLING

$$\bar{K}_{\phi fe} = \left(\frac{\pi}{L_d}\right)^4 \left[E C_{wf} + E I_{xf} (x_{of} - x_{hf})^2 \left(1 - \frac{I_{xyf}^2}{I_{xf} I_{yf}}\right)\right] + \left(\frac{\pi}{L_d}\right)^2 G J_f$$

$$L_{crd} = \pi h_o \left\{ \frac{6(1-\mu)^2}{t^3 h_o^3} \left[C_{wf} + I_{xf} (x_{of} - x_{hf})^2 \left(1 - \frac{I_{xyf}^2}{I_{xf} I_{yf}}\right)\right]\right\}^{1/4}$$

$$= 3.14 \times 4.5 \left\{ \frac{6(1-.3^2)}{.050^3 \times 4.5^3} \left[0 + .000377 \overset{1.0}{(.3555 + .6445)^2} \left(1 - \frac{.00103^2}{.00864 \times .00038}\right)\right]\right\}^{1/4}$$

.0114 .000255 .677

$$= 8.35'' \leftarrow \overset{479}{L_d}$$

$L_m = 24''$ SCREW FIELD SPACING

$$\bar{K}_{\phi fe} = \left(\frac{\overset{.376}{3.14}}{8.35}\right)^4 \left[29000 \times 0 + 29000 \times .00038 \overset{1.0}{(.3555 + .6445)^2} \left(1 - \frac{\overset{.674}{.00103^2}}{.000377 \times .00864}\right)\right] + \left(\frac{\pi}{8.35}\right)^2 \times 11300 \times .000055$$

$$= (.376)^4 \left[0 + 7.427\right] + (.376)^2 \times 11300 \times .000055 = .236$$

.08787

$$\bar{K}_{\phi we} = \frac{E t^3}{12(1-\mu^2)} \left(\frac{2}{h_o}\right) = \frac{29000 \times .050^3}{12(1-.3^2)} \left(\frac{2}{4.5}\right) = .1473$$

.444

$\bar{K}_\phi = 0$ CONSERVATIVE

$$\tilde{K}_{\phi fg} = \left(\frac{\pi}{L_d}\right)^2 \left\{ I_{xf} + I_{yf} + A_f \left[x_{hf}^2 + y_{of}^2 - 2 y_{of} (x_{of} - x_{hf}) \left(\frac{I_{xyf}}{I_{yf}}\right) + (x_{of} - x_{hf})^2 \left(\frac{I_{xyf}}{I_{yf}}\right)^2 \right.\right.$$

$$= \left(\frac{3.14}{8.35}\right)^2 \left\{ .000377 + .00864 + .067 \left[.6445^2 + .0355^2 - 2 \times .0355 \overset{1.0}{(.3555 + .6445)} \left(\frac{.00103}{.00864}\right) + \overset{1.0}{(.3555 + .6445)^2} \left(\frac{.00103}{.00864}\right)^2 \right.\right.$$

.376 .1192

$$= .376^2 \left\{ .009017 + .067 \left[.415 + .00126 - .00846 + .0142 \right]\right\} = .00527$$

APPROVED: STATE OF CA - CERTIFIED DAA
Based on the requirements of title 25 California code of regulations
Chapter 3 subchapter 2 Commercial Modular
Date: 04-25-2023 Expires: 07-31-2024
Approval #: PFS: 23-002714
THIS APPROVAL DOES NOT AUTHORIZE OR APPROVE ANY OMISSION OR DEVIATION FROM THE REQUIREMENTS OF STATE LAWS OR APPLICABLE LOCAL ORDINANCES. THIS APPROVAL IS LIMITED TO A FACTORY-BUILT PORTION ONLY.
PFS CORPORATION - Cottage Grove, WI

DATE 3/13/23
JOB NO. 1140
BY BKY
PAGE 2.11

TORTIONAL BUCKLING

$$\tilde{K}_{\phi wg} = \left(\frac{\pi}{Ld}\right)^2 \frac{t h_o^3}{60} = \left(\frac{3.14}{8.35}\right)^2 \frac{.050 \times 9.5^3}{60} = .01074$$

$$F_{crd} = \beta \frac{\bar{K}_{\phi fc} + \bar{K}_{\phi we} + \bar{K}_{\phi}}{\tilde{K}_{\phi fg} + \tilde{K}_{\phi wg}}$$

$$= 1.0 \left(\frac{.236 + .1473 + 0}{.00527 + .01074}\right) = 23.94 \text{ ksi}$$

$$M_{crd} = S_{fc} F_{crd}$$

S_{fc} = ELASTIC SECTION MODULUS OF FULL UNREDUCED SECTION RELATIVE TO EXTREME COMPRESSION FIBER

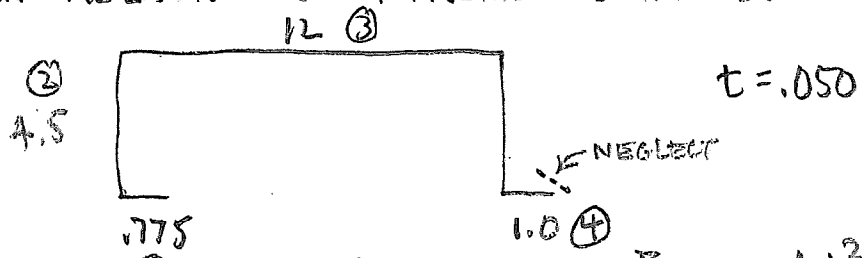

PC	AREA	① y	Ay	I_o	Ad^2
1	.039	.025	.00097	—	.408
2	.45	2.25	1.01	.76	.459
3	.60	4.5	2.7	.000125	.923
4	.05	.025	.00125	—	.523
	1.139		3.71		3.073 in.^{4}

$$\bar{y} = \frac{3.71}{1.139} = 3.26 \text{ in. UP}$$

$$I = 3.073 \text{ in.}^4$$

$$S_{fc} = \frac{3.073}{4.5 - 3.26} = 2.48 \text{ in.}^3 \qquad S_{fc} = \frac{3.073}{3.26} = .94 \text{ in.}^3$$

KH2A ENGINEERING, INC.

CLIENT VFP
PROJECT

DISTORTIONAL BUCKLING

DATE 3/13/23
JOB NO. 1140
BY BKG
PAGE 2.12

$M_{crd} = S_{fc} F_{crd} = 2.48 in^3 \times 23.94 ksi = 56^{k-in} = 4.7^{k-ft}$

DISTORTIONAL BUCKLING DOES NOT CONTROL FLEXURAL CAPACITY

$\frac{M_{crd}}{1.67} = \frac{4.7^{k-ft}}{1.67} = 2.81^{k-ft}$

APPROVED: STATE OF CA - CERTIFIED DAA

Based on the requirements of title 25 California code of regulations
Chapter 3 subchapter 2 Commercial Modular

Date: 04-25-2023 Expires: 07-31-2024

Approval # PFS: 23-002714

THIS APPROVAL DOES NOT AUTHORIZE OR APPROVE ANY OMISSION OR DEVIATION FROM THE REQUIREMENTS OF STATE LAWS OR APPLICABLE LOCAL ORDINANCES . THIS APPROVAL IS LIMITED TO FACTORY-BUILT PORTION ONLY.

PFS CORPORATION - Cottage Grove, WI

APPROVED: STATE OF CA - CERTIFIED DAA
Based on the requirements of title 25 California code of regulations
Chapter 3 subchapter 2 Commercial Modular
Date: 04-25-2023 Expires: 07-31-2024
Approval: PFS: 23-002714
THIS APPROVAL DOES NOT AUTHORIZE OR APPROVE ANY OMISSION OR DEVIATION FROM THE REQUIREMENTS OF STATE LAWS OR APPLICABLE LOCAL ORDINANCES. THIS APPROVAL IS LIMITED TO FACTORY-BUILT PORTION ONLY.
PFS CORPORATION - Cottage Grove, WI

CLIENT
PROJECT

DA ENGINEERING, INC. MEQUACY

DATE 12/2/09
JOB NO. 1140
BY BKY
PAGE 3.1

REV. 3/9/12

AXIAL CAPACITY OF WALLS

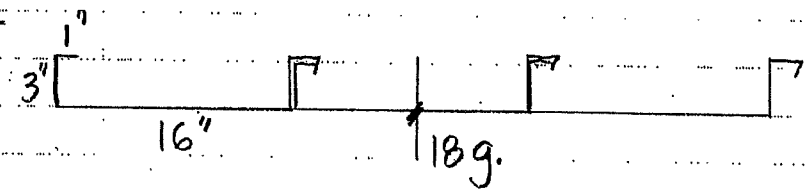

WIDTH TO THICKNESS RATIOS B1.1 (S136-01)

WIDTH	THICKNESS	$\frac{w}{t}$	MAXIMUM	
1"	.050"	20 ✓	60	UNSTIFFENED
3"	.050"	60 ✓	500	STIFFENED
16"	.050"	320 ✓	500	STIFFENED

EFFECTIVE WIDTHS OF STIFFENED ELEMENTS 16" FLANGE B2.1

$$\lambda_c = \sqrt{\frac{F_y}{F_e}} = \sqrt{\frac{50\,ksi}{7.4\,ksi}} = 2.6$$

C4-4 (S136-01)

BECAUSE OF INTERIOR SHEATHING, SECTION NOT SUBJECT TO TORSIONAL OR TORSIONAL FLEXURAL BUCKLING

$$F_e = \frac{\pi^2 E}{(KL/r)^2}$$

$$= \frac{\pi^2 E}{197^2} = 7.4\,ksi$$

$E = 29000$ ksi

$K = 1.0$

$L = 132"$

$$r = \sqrt{\frac{I}{A}} = \sqrt{\frac{0.55\,in^4}{1.2\,in^2}} = 0.67"$$

APPROVED: STATE OF CA - CERTIFIED DAA
Based on the requirements of title 25 California code of regulations
Chapter 3 subchapter 2 Commercial Modular
Date: 04-25-2023 Expires: 07-31-2024
Approval # PFS: 23-002714
PFS APPROVAL DOES NOT AUTHORIZE OR APPROVE ANY OMISSION OR DEVIATION FROM THE REQUIREMENTS OF STATE LAWS OR APPLICABLE STATE ORDINANCES. THIS APPROVAL IS LIMITED TO FACTORY-BUILT PORTION ONLY.
PFS CORPORATION - Cottage Grove, WI

DATE 12/21/09
JOB NO. 1140
BY BKY
PAGE 3.2

EQUACY

REV. 3/9/12

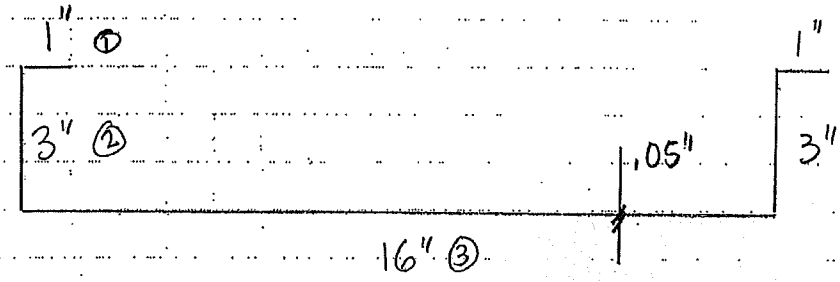

PC	AREA	y	Ay	I_o	Ad^2
1	$2 \times .05 \times 1 = .1$	3	.3	—	.557 ✓
2	$3 \times 2 \times .05 = .3$	1.5	.45	.23	.221 ✓
3	$16 \times .05 = .8$	.025	.02	—	.303 ✓
	1.2 in.^{2}		.77 in.^{3}		1.311 ✓

$$\bar{y} = \frac{.77}{1.2} = .64"$$

$$r = \sqrt{\frac{I}{A}} = \sqrt{\frac{.553}{1.2}} = .67"$$

$$S = \frac{1.34}{.64} = 2.05 \text{ in.}^3$$

$$S = \frac{1.311}{2.36} = .556 \text{ in.}^3$$

DISTORTIONAL BUCKLING STRESS $F_{crd} = 24$ ksi

$M_{ord} = S_{fc} F_{crd} = .556 \text{ in}^3 \times 24 \text{ ksi} = 13.34$ K-" PER 16"

$$\frac{M_{crd}}{1.67} = \frac{13.34}{12 \times 1.67} = .67 \text{ K-1}$$ CONTROLS OVER LOCAL BUCKLING

APPROVED: STATE OF CA - CERTIFIED DAA
Based on the requirements of title 25 California code of regulations
Chapter 3 subchapter 2 Commercial Modular
Date: 04-25-2023 Expires: 07-31-2024
Approval #: PFS-23-002714
THIS APPROVAL DOES NOT AUTHORIZE OR APPROVE ANY OMISSION OR DEVIATION FROM THE REQUIREMENTS OF STATE LAWS OR APPLICABLE LOCAL ORDINANCES . THIS APPROVAL IS LIMITED TO FACTORY-BUILT PORTION ONLY.
PFS CORPORATION - Cottage Grove, WI

LA ENGINEERING, INC. — WALL ADEQUACY

DATE 12/2/09
JOB NO. 1140
BY BKT
PAGE 3.3

REV. 3/9/12

FOR $\lambda_c \geq 1.5$, $F_n = \left(\frac{0.877}{\lambda_c^2}\right) F_y = \left(\frac{.877}{2.60^2}\right)(50\text{ksi}) = 6.5\text{ ksi}$

λ = SLENDERNESS FACTOR = $\sqrt{\frac{f}{F_{cr}}}$

$$F_{cr} = k\,\frac{\pi^2 E}{12(1-\mu^2)}\left(\frac{t}{w}\right)^2$$

K = PLATE BUCKLING COEF. = 4

E = 29×10^6 PSI YOUNG'S MODULUS

μ = 0.3 POISSON'S RATIO

t = 0.050" (18 ga.)

w = FLAT WIDTH OF FLANGE = 16"

$$F_{cr} = \frac{(4)(\pi^2)(29\times10^6\text{ psi})}{12(1-0.3^2)}\left(\frac{.050}{16}\right)^2 = 1023\text{ psi}$$

SAY f = 14 ksi WHEN BOTTOM FLANGE YIELDS AT 50 ksi = F_y

$$\lambda = \sqrt{\frac{f}{F_{cr}}} = \sqrt{\frac{14}{1.02}} = 3.7$$

$$\rho = \frac{\left(1-\frac{.22}{3.7}\right)}{3.7} = .25$$

$b = .25\,w = (.25)(16") = 4"$

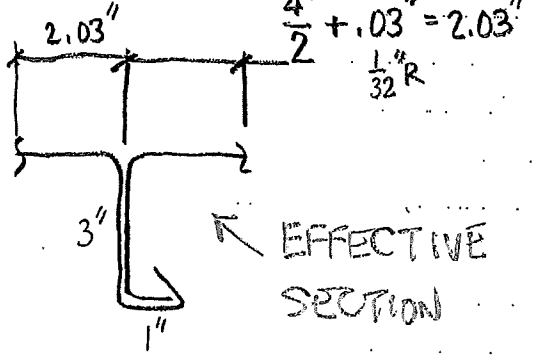

APPROVED: STATE OF CA - CERTIFIED DAA
Based on the requirements of title 25 California code of regulations
Chapter 3 subchapter 2 Commercial Modular
Date: 04-25-2023 Expires: 07-31-2024
Approval#PFS: 23-002714
THIS APPROVAL DOES NOT AUTHORIZE OR APPROVE ANY OMISSION OR DEVIATION FROM THE REQUIREMENTS OF STATE LAWS OR APPLICABLE LOCAL ORDINANCES. THIS APPROVAL IS LIMITED TO - FACTORY-BUILT PORTION ONLY.
PFS CORPORATION - Cottage Grove, WI
KH2A ENGINEERING, INC.

VFP, INC.

DATE 9/25/15
JOB NO. 1140
BY BKY
PAGE 3.4

AXIAL STRENGTH $P_n = A_e F_n$

$A_e = (4.06+3+3+1+1)(.050") = .603\ in^2$

$F_n = 6.5\ ksi$ ✓

$P_n = (.603\ in^2)(6.5\ ksi) = 3.9^k$ PER 16" = $2.94^{k/'}$

$\frac{P_n}{\Omega_c} = \frac{2.94^k}{1.8} = 1.63^{k/'}$ AXIAL ALLOWABLE IS HIGH

AXIAL DEMAND

$D = \frac{12'}{2} \times 10\ PSF = 60^{\#/LF}$

$L = \frac{12'}{2} \times 100\ PSF = \frac{600^{\#/LF}}{660^{\#/LF}}$ AXIAL DEMAND IS LOW

$\frac{\Omega_c P}{P_n} = \frac{.660}{1.63} = .43 \geq .15$

FLEXURAL DEMAND

ZONE 4, 50 FT.^{2}, 130 MPH = 29.8 PSF $\times^{\lambda_c}$ 1.21 = 36.1 PSF USD

APPROVED: STATE OF CA - CERTIFIED DAA
Based on the requirements of title 25 California code of regulations
Chapter 3 subchapter 2 Commercial Modular
Date: 04-25-2023 Expires: 07-31-2024
Approval # PFS: 23-002714
THIS APPROVAL DOES NOT AUTHORIZE OR APPROVE ANY OMISSION OR DEVIATION FROM THE CERTIFIED PLANS, STATE LAWS OR APPLICABLE LOCAL ORDINANCES . THIS APPROVAL IS LIMITED TO - FACTORY-BUILT PORTION ONLY.
PFS CORPORATION - Cottage Grove, WI
KBDA ENGINEERING, INC.

VFP, INC.

DATE 9/25/15
JOB NO. 1140
BY BKY
PAGE 3.5

FLEXURAL STRENGTH

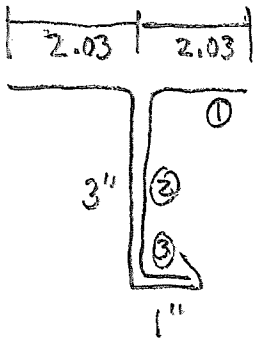

PC	A	y	Ay	I_o	Ad^2
1	.203	3	.609	—	.31
2	.300	1.5	.45	.225	.02
3	.1	.025	.003	—	.3
	.603		1.062		.855

$$\bar{y} = \frac{1.062}{.603} = 1.76'' \text{ UP}$$

$$I = .855 \text{ in.}^4$$

$$S_T = \frac{.855}{3-1.76} = .69 \text{ in.}^3 \qquad S_B = \frac{.855}{1.76} = .49 \text{ in.}^3$$

$$\frac{M_n}{\Omega_b} = \frac{S_e F_y}{1.67} = \frac{(.49 \text{ in}^3)(50 \text{ ksi})}{1.67} = 14.55^{\text{K-in}} \text{ PER } 16''$$

$$= 1.21^{\text{K-ft}} \text{ PER } 16''$$

DISTORTION BUCKLING CONTROLS

SHEAR OK BY INSPECTION

APPROVED: STATE OF CA - CERTIFIED DAA
Based on the requirements of title 25 California code of regulations
Chapter 3 subchapter 2 Commercial Modular
Date: 04-25-2023 Expires: 07-31-2024
Approval #: PFS: 23-002714
THIS APPROVAL DOES NOT AUTHORIZE OR APPROVE ANY OMISSION OR DEVIATION FROM THE REQUIREMENTS OF STATE LAWS OR APPLICABLE ORDINANCES. THIS APPROVAL IS LIMITED TO FACTORY-BUILT PORTION ONLY.
PFS CORPORATION - Cottage Grove, WI

VFP

DATE 9/25/15
JOB NO. 1140
BY BKY
PAGE 3.6

ENC I (110" WALLS)

WALL ADEQUACY FOR COMBINED AXIAL + FLEXURE

LC : D+L D = 60#/LF ROOF

D = 92#/LF WALLS

LL = 600#/LF ROOF

D+L = 752#/LF $\frac{\Omega_c P}{P_n} = \frac{.752}{1.63} = .46 < 1.0$ ✓

LC : D+.75RLL+.75(.6W)

D+.75RLL = 60+92+.75(600) = 602#/LF

$\frac{\Omega_c P}{P_n} = \frac{.602}{1.63} = .37$

.75(.6W) = .75(.6 × −36.1) = −16.2 PSF

M = (16.2)(9.17')²/8 = 170 #-/ PER FOOT WIDTH

= 170 #-/ × 16/12 = 227 #-/ PER PAN

INTERACTION : $\frac{\Omega_c P}{P_n} + \frac{\Omega_b M}{M_n} = \frac{.602}{1.63} + \frac{.227}{.67} = .71 < 1.0$ ✓

LC : D+0.6W

D = 60+92 = 152#/LF $\frac{\Omega_c P}{P_n} = \frac{.152}{1.63} = .09$

.6W = .6 × 36.1 = 21.7

M = (21.7)(9.17)/8 = .228 LC = .09 + $\frac{.228}{.67}$ = .43 < 1.0 ✓

APPROVED: STATE OF CA - CERTIFIED DAA
Based on the requirements of title 25 California code of regulations
Chapter 3 subchapter 2 Commercial Modular
Date: 04-25-2023 Expires: 07-31-2024
Approval #PFS: 23-002714
THIS APPROVAL DOES NOT AUTHORIZE OR APPROVE ANY OMISSION OR DEVIATION FROM THE REQUIREMENTS OF STATE LAWS OR APPLICABLE LOCAL ORDINANCES. THIS APPROVAL IS LIMITED TO - FACTORY-BUILT PORTION ONLY.
PFS CORPORATION - Cottage Grove, WI

KHA ENGINEERING, PLLC

EWC II (121" WALLS)

DATE 9/28/15
JOB NO. 1140
BY BKY
PAGE 3.7

WALL ADEQUACY FOR COMBINED AXIAL + FLEXURE (EWC II, 121" WALLS)

LC: D+L D = 60 #/' ROOF D = 101 #/' WALLS RLL = 600 #/'

D+L = 761 #/LF $\frac{\Omega_c P}{P_n} = \frac{.761}{1.63} = .47 \leq 1.0$ ✓

LC: D + .75RLL + .75(.6W)

D + .75L = 60 + 101 + .75(600) = 611 #/'

$\frac{\Omega_c P}{P_n} = \frac{.611}{1.63} = .37$

.75(.6 × 36.1) = -16.2 PSF

$M = (16.2)(10.08')^2/8 = 236^{\#-'}$ PER FOOT WIDTH

$= 236 \times \frac{16}{12} = 315^{\#-'}$ PER PAN

INTERACTION: $.37 + \frac{.315}{.67} = .37 + .47 = .84 \leq 1.0$ ✓

LC: D + .6W

D = 60 + 101 = 161 #/LF

$\frac{\Omega_c P}{P_n} = \frac{.161}{1.63} = .099$

$M = (21.7\ PSF)(10.08^2)/8 = 276^{\#-'}$ PER FOOT WIDTH

$= 276 \times \frac{16}{12} = 360^{\#-'}$ PER PAN

INTERACTION: $.099 + \frac{.360}{.67} = .64 \leq 1.0$ ✓

APPROVED: STATE OF CA - CERTIFIED DAA
Based on the requirements of title 25 California code of regulations
Chapter 3 subchapter 2 Commercial Modular
Date: 04-25-2023 Expires: 07-31-2024
Approval#PFS: 23-002714
THIS APPROVAL DOES NOT AUTHORIZE OR APPROVE ANY OMISSION OR DEVIATION FROM THE APPROVED PLANS, STATE LAWS OR APPLICABLE LOCAL ORDINANCES. THIS APPROVAL IS LIMITED TO - FACTORY-BUILT PORTION ONLY.
PFS CORPORATION - Cottage Grove, WI

KHA ENGINEERED INC. FWC III (132" WALLS)

DATE 9/25/15
JOB NO. 1140
BY BKY
PAGE 3.8

WALL ADEQUACY FOR COMBINED AXIAL + FLEXURE (EWC III, 132")

LC: D+L D = 60 #/ ROOF D = 110 #/ WALLS RLL = 600 #/

D+L = 770 #/LF $\frac{\Omega_c P}{P_n} = \frac{.770}{1.63} = .47 \leq 1.0$ ✓

LC: D + .75L + .75(.6W)

D + .75L = 170 + .75(600) = 620 #/LF

$\frac{\Omega_c P}{P_n} = \frac{.620}{1.63} = .38$

.75(.6W) = .75(21.7) = 16.3 PSF

M = (-16.3)(11.0')²/8 = 246 #-/ PER FOOT WIDTH

= 246 × 16/12 = 328 #-/ PER PANEL

INTERACTION: .38 + .328/.67 = .38 + .49 = .87 ≤ 1.0 ✓

LC: D + 0.6W

D = 170 PLF $\frac{\Omega_c P}{P_n} = \frac{.170}{1.63} = .10$

M = (21.7)(11.0²)/8 = 328 #-/ PER FOOT WIDTH

= 328 × 16/12 = 437 #-/ PER PAN

INTERACTION: .10 + .437/.67 = .75 ≤ 1.0 ✓

APPROVED: STATE OF CA - CERTIFIED DAA
Based on the requirements of title 25 California Code of regulations
Chapter 3 subchapter 2 Commercial Modular
Date: 04-25-2023 Expires: 07-31-2024
Approval # PFS: 23-002714
THIS APPROVAL DOES NOT AUTHORIZE OR APPROVE ANY OMISSION OR DEVIATION FROM THE REQUIREMENTS OF STATE LAWS OR APPLICABLE LOCAL ORDINANCES. THIS APPROVAL IS LIMITED TO FACTORY-BUILT PORTION ONLY.
PFS CORPORATION - Cottage Grove, WI

CLIENT
PROJECT

DATE 12/1/09
JOB NO. 1140
BY BKY
PAGE 4.1

...EIGHT FLOOR ASSEMBLY

REV. 3/9/12

C4 x 5.4 STRINGERS (ASTM A36)

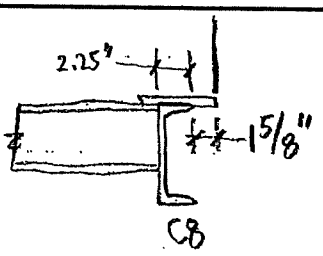

SPACING = 16" OC

CLEAR SPAN = 168" − 2(2.25 + 1.625") = 160.25" (DWG. 293359)
b_f 13.35'

DL = C4 x 5.4 SELF WEIGHT 5.4 PLF

1/4" FLOOR PLATE 10.2 PSF x 16"/12"/' 13.6 PLF

ALLOWANCE FOR FINISHES 5 PSF x 16"/12"/' 6.7 PLF

25.7 PLF

LL = 125 PSF x 16"/12"/' 167 PLF

192 PLF ← TL

TREAT AS SIMPLE SPAN, C8 UNABLE TO CARRY MOMENT.

$M = (192\ \#/')(13.35')^2/8 = 4277^{\#-'}$

$V = (192\ \#/')(13.35')/2 = 1282^{\#}$

YIELDING: $M_n = F_y Z_x = (36\ ksi)(2.29\ in^3) = 82.44^{K-''} = 6870^{\#-'}$

LATERAL-TORSIONAL BUCKLING:

$$L_p = 1.76\, r_y \sqrt{\frac{E}{F_y}} = 1.76(.444'')\sqrt{\frac{29000}{36}} = 22''$$

IF DECK PLATE IS WELDED TO CHANNELS ≤22" OC, LTB NEGATED.

ALLOWABLE FLEXURAL STRENGTH = $\frac{M_n}{\Omega_b} = \frac{6870^{\#-''}}{1.67} = 4114^{\#-''}$ 3.9% OVERSTRESS SAY OK.

APPROVED: STATE OF CA - CERTIFIED DAA
Based on the requirements of title 25 California code of regulations
Chapter 3 subchapter 2 Commercial Modular
Date: 04-25-2023 Expires: 07-31-2024
Approval #PFS: 23-002714
THIS APPROVAL DOES NOT AUTHORIZE OR APPROVE ANY OMISSION OR DEVIATION FROM THE REQUIREMENTS OF STATE LAWS OR BUILDING ORDINANCES. THIS APPROVAL IS LIMITED TO FACTORY-BUILT PORTION ONLY.
PFS CORPORATION - Cottage Grove, WI

DATE 12/1/09
JOB NO. 1140
BY BKY
PAGE 4.2

...GHT FLOOR ASSEMBLY

REV. 3/9/12

SHEAR

$$\frac{h}{t_w} = \frac{2.5''}{.184''} = 13.6 < 69.8 \longrightarrow C_v = 1.0 \quad \text{WEB SHEAR COEFF.}$$

$$1.10\sqrt{\frac{K_v E}{F_y}} = 1.10\sqrt{\frac{(5)(29000)}{36}} = 69.8$$

$$V_n = 0.6 F_y A_w C_v = (.6)(36\,ksi)(4'')(.184'')(1.0)^{C_v}$$

$$= 15.9^{K}$$

$$\text{ALLOWABLE SHEAR} = \frac{V_n}{\Omega_v} = \frac{15.9^{K}}{1.67} = 9.5^{K} > 1.3^{K} \checkmark \text{ SHEAR OK}$$

DEFLECTION

$$\Delta_{TL} = \frac{(5)(192/12)(160.25)^4}{(384)(29\times10^6)(3.85\,in.^4)} = 1.23'' \quad \frac{\ell}{130} \quad \text{SOFT.}$$

NEED TO LIMIT LL DEFLECTION TO $\frac{\ell}{240} = .67''$

FOR C4X5.4 STRINGERS, SPAN $\leq$ 137.7" 12' BUILDING OK

IF VFP WANTS 160.25" SPAN, CLOSE SPACING TO $\frac{105}{192} \times 16'' = 8.6''$ OC > 12' BUILDING

OR, CHANGE CHANNEL SIZE TO C5X6.7 FOR > 12' BUILDING

WELDS 2-4" LONG x 3/16" FILLETS

$(2)(4)(.156)(.707)(21\,ksi) = 22^{K} > 1.3^{K}$ 2-4" x 3/16" FILLET WELDS OK

APPROVED: STATE OF CA - CERTIFIED DAA
Based on the requirements of title 25 California code of regulations
Chapter 3 subchapter 2 Commercial Modular
Date: 04-25-2023 Expires: 07-31-2024
Approval # PFS: 23-002714
THIS APPROVAL DOES NOT AUTHORIZE OR APPROVE ANY OMISSION OR DEVIATION FROM THE REQUIREMENTS OF STATE LAWS OR CALIFORNIA CODE OF REGULATIONS. THIS APPROVAL IS LIMITED TO FACTORY-BUILT PORTION ONLY.
PFS CORPORATION - Cottage Grove, WI

EIGHT FLOOR ASSEMBLY

DATE 12/1/09
JOB NO. 1140
BY BKY
PAGE 4.3

REV. 3/9/12

C8x11.5 MAIN EDGE BEAMS 30' LONG BUILDING (DWG 293359)

146" TALL, 30' LONG, 12' WIDE BUILDING IS 18960# (PL)

UPSCALE FOR 14' WIDE BUILDING $18960^{\#} \times \frac{14}{12} = 22120^{\#}$

DISTRIBUTE BETWEEN 2-C8x11.5, 30' LONG EACH

$W_{DL} = \frac{22120^{\#}}{2 \times 30'} = 369^{\#}/'$

$W_{LL} = 20\ PSF \times \frac{14'}{2} = 140^{\#}/'$

$509^{\#}/'$ (CONSTRUCTION LIVE LOAD)

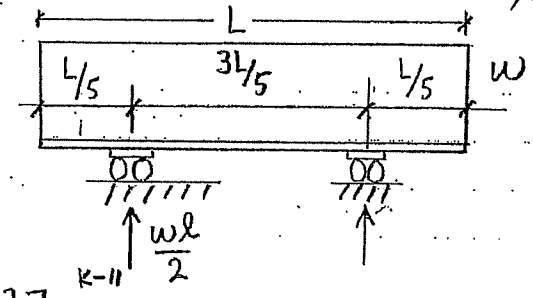

SIMPLY SUPPORTED ON DOLLIES

$M^{+} = (509^{\#}/')(30')^2(.025) = 11.5^{K-1} = 137$

$V = (509)(30')(.3) = 4581^{\#}$

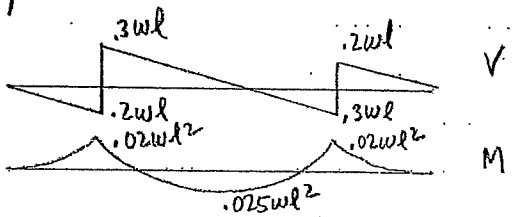

FLEXURE

YIELD: $M_n = F_y Z_x = (36\ ksi)(9.63\ in.^3) = 347^{K-11}$

LTB DOES NOT APPLY; C4 STRINGERS BRACE C8S @ 16"OC

$\frac{M_n}{\Omega_b} = \frac{347^{K-11} \times 1000 \times \frac{1}{12}}{1.67} = 17.3^{K-1} > 11.5^{K-1}$ ✓

SHEAR

$V_n = (.6)(36\ ksi)(8")(.32")(1.0) = 38^{K} > 11.5^{K}$ ✓

I2A ENGINEERING, INC.

CLIENT VFP, INC
PROJECT

LIGHTWEIGHT FLOOR ASSEMBLY

DATE 12/2/09
JOB NO. 1140
BY BKY
PAGE 4.4

REV. 3/9/12

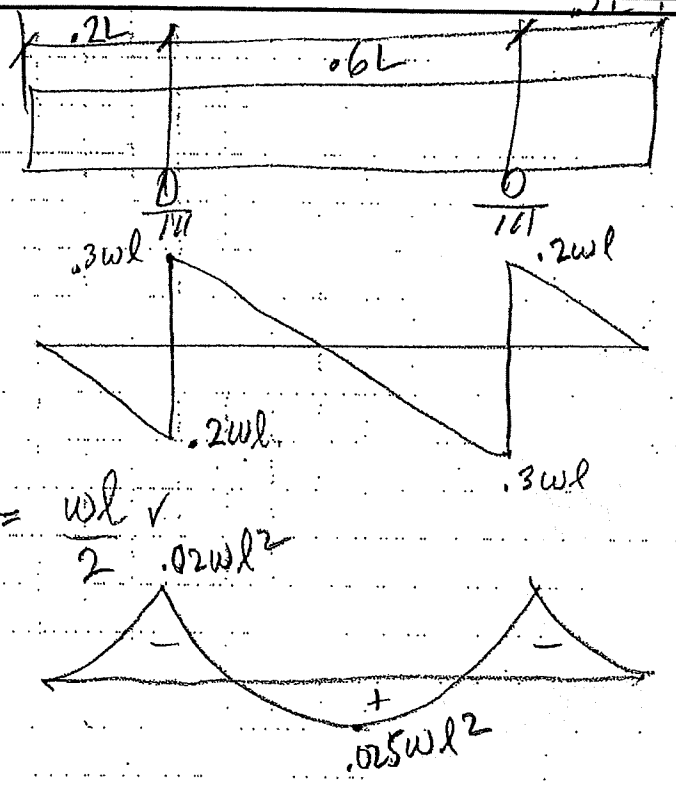

$$R_L = \frac{(wl)(.3L)}{.6L} = \frac{wl}{2} \quad V$$

$$M^-_{MAX} = \frac{(.2wl)(.1L)}{2} = -.02wl^2$$

$$M^+_{MAX} = -.02wl^2 + \frac{(.3wl)(.3l)}{2} = -.02wl^2 + .045wl^2 = +.025wl^2$$

APPROVED: STATE OF CA - CERTIFIED DAA

Based on the requirements of title 25 California code of regulations
Chapter 3 subchapter 2 Commercial Modular

Date: 04-25-2023 Expires: 07-31-2024

Approval # PFS: 23-002714

THIS APPROVAL DOES NOT AUTHORIZE OR APPROVE ANY OMISSION OR DEVIATION FROM THE REQUIREMENTS OF STATE LAWS OR APPLICABLE LOCAL ORDINANCES . THIS APPROVAL IS LIMITED TO FACTORY-BUILT PORTION ONLY.

PFS CORPORATION - Cottage Grove, WI

APPROVED: STATE OF CA - CERTIFIED DAA
Based on the requirements of title 25 California code of regulations
Chapter 3 subchapter 2 Commercial Modular
Date: 04-25-2023 Expires: 07-31-2024
Approval #: PFS-0423-002714
THIS APPROVAL DOES NOT AUTHORIZE OR APPROVE ANY OMISSION OR DEVIATION FROM THE REQUIREMENTS OF STATE LAWS OR APPLICABLE LOCAL ORDINANCES. THIS APPROVAL IS LIMITED TO FACTORY-BUILT PORTION ONLY.
PFS CORPORATION - Cottage Grove, WI
DAA ENGINEER
PFS

CLIENT INC.

PROJECT

WEIGHT FLOOR ASSEMBLY

DATE 12/2/09
JOB NO. 1140
BY BKY
PAGE 4.5

REV. 3/9/12

DEFLECTION

FROM RISA-3D, $\Delta_{TL} = -.59"$ AT MID POINT BETWEEN SUPPORTS

$\Delta_{TL} = +.29"$ AT CANTILEVER END

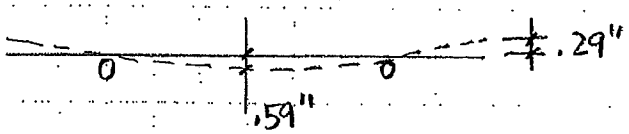

$(509)(\ell)^2(.025) \le 17300^{\#-1}$

$\ell = \sqrt{\frac{17300}{.025 \times 509}}$

$= 36.9'$

C8x11.5 OK UP TO 36'

FOR 40' LONG BUILDING, WILL C8x11.5 WORK?

$M^+ = (509)(40')^2(.025) = 20.4^{K-1} > 17.3^{K-1}$ C8x11.5 N.G.

$V = (509)(40')(.3) = 6108^{\#}$

TRY C8x18.5 $Z_x = 13.9\ in.^3$ $M_n = (36\ ksi)(13.9\ in.^3) = 500^{K-11}$

$\frac{M_n}{\Omega_b} = 299^{K-11} = 24.95^{K-1} > 20.4^{K-1}$ ✓

SHEAR $\frac{V_n}{\Omega_v} = \frac{(.6)(36\ ksi)(8)(.49)(1.0)}{1.67} = 50.7^K > 6.1^K$ ✓ (C_v)

$\Delta_{TL} = -1.39"$ @ MIDSPAN BETWEEN SUPPORTS

$\Delta_{TL} = +.7"$ @ CANTILEVER END

FOR >36' TO 40', USE C8x18.5 CHANNELS

2A ENGINEERING, INC.

CLIENT VFP, INC.
PROJECT

CONCRETE FLOOR ASSEMBLY

DATE 12/2/09
JOB NO 1140
BY BKY
PAGE 5.1

REV, 3/9/12

W6x9 STRINGERS (50ksi, ASTM A992)

APPROVED: STATE OF CA - CERTIFIED DAA
Based on the requirements of title 25 California code of regulations
Chapter 3 subchapter 2 Commercial Modular
Date: 04-25-2023 Expires: 07-31-2024
Approval # PFS: 23-002714
THIS APPROVAL DOES NOT AUTHORIZE OR APPROVE ANY OMISSION OR DEVIATION FROM THE REQUIREMENTS OF STATE LAWS OR APPLICABLE LOCAL ORDINANCES. THIS APPROVAL IS LIMITED TO FACTORY-BUILT PORTION ONLY.
PFS CORPORATION - Cottage Grove, WI

42" OC MAX.

SPAN = 12'

DL = 9 PLF SELFWEIGHT

$\frac{3"}{12} \times 95\ PCF\ LWC \times \frac{42}{12} = 83\ PLF$ DECK

LL = $\frac{42}{12} \times 125\ PSF = 438\ PLF$

530 PLF ← TL

$M = (530^{\#}/_{1})(12')^2/8 = 9540^{\#-1}$

$V = (530)(12)/2 = 3180^{\#}$

$\frac{M_n}{\Omega_b} = \frac{F_y Z_x}{1.67} = \frac{(50\ ksi)(6.23\ in^3)}{1.67} = 187^{K-in} = 15.5^{K-1} > 9.54^{K-1}$ ✓

NOTE IN STEEL MANUAL SAYS W6x9 SECTION IS NON-COMPACT, BUT COMPRESSION FLANGE IS LOCKED INTO CONCRETE, SO LTB AND COMPRESSION FLANGE LOCAL BUCKLING ARE NOT POSSIBLE.

SHEAR $\frac{V_n}{\Omega_v} = \frac{(.6)(50)(5.9")(.17")(1.0)^{Cv}}{1.67} = 18^K > 3.2^K$ ✓

$\Delta_{TL} = \frac{(5)(530/12)(144")^4}{(384)(29\times10^6)(16.4\ in.^4)} = .52" < \frac{\ell}{277}$ ✓

2-6" x 3/16" FILLET WELDS GOOD FOR (2)(6)(.188)(.707)(21) = 33^K > 3.2^K ✓

W6x9 STRINGERS OK FOR 12' SPAN, 42" OC MAX, 125 PSF LL

APPROVED: STATE OF CA - CERTIFIED DAA
Based on the requirements of title 25 California code of regulations
Chapter 3 subchapter 2 Commercial Modular
Date: 04-25-2023 Expires: 07-31-2024
Approval # PFS: PFS-23-002714
THIS APPROVAL DOES NOT AUTHORIZE OR APPROVE ANY OMISSION OR DEVIATION FROM THE REQUIREMENTS OF STATE LAWS OR APPLICABLE CONSTRUCTION CODES. THIS APPROVAL IS LIMITED TO FACTORY-BUILT PORTION ONLY.
PFS CORPORATION - Cottage Grove, WI

INC.

DATE 12/2/09
JOB NO. 1140
BY BKY
PAGE 5.2

ETE SKID MAIN BEAMS

REV. 3/9/12

CONSIDER 12' WIDE, 146" TALL BUILDING, 30' LONG

$W = 24000^{\#}$ $\omega_{DL} = \frac{24,000^{\#}}{2 \times 30'} = 400^{\#/'}$

$W_{LL} = 20\ PSF \times \frac{12'}{2} = 120^{\#/'}$

$520^{\#/'}$

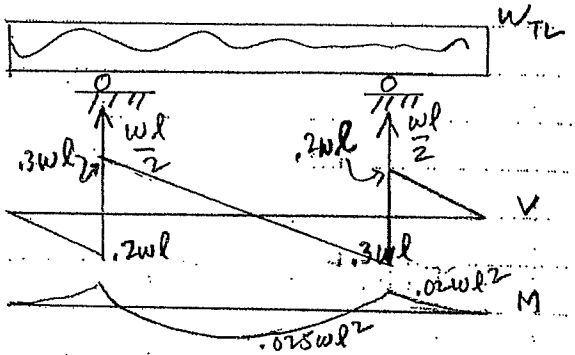

MAIN

CHECK FOLLOWING BEAM SIZES (TAKEN FROM DWG. 270240)

BUILDING LENGTH DIM. "P", INCHES	MEMBER SIZE	MOMENT .025wl² K-ft	SHEAR .3wl K	Z_x in.³	$M_{all} = F_y Z_x / \Omega_b$ K-ft	A_w dt_w in.²	$V_{all} = 17.96 \times A_w$ K	$\Delta_{MID} = (1E-9)\frac{l^4}{I}$	
203	W8x13	3.72	2.64	11.4 ✓	28.4 ✓	1.84	33 ✓	.04"	$\frac{l}{5075}$ ✓
275	W8x18	6.83	3.58	17.0 ✓	42.4 ✓	1.87	33.6 ✓	.09"	$\frac{l}{3052}$ ✓
335	W8x21	10.13	4.36	20.4 ✓	50.9 ✓	2.07	37.2 ✓	.17"	$\frac{l}{1970}$ ✓
383	W8x28	13.24	4.98	27.2 ✓	67.9 ✓	2.29	41.1 ✓	.22"	$\frac{l}{1740}$ ✓
431	W8x31	16.77	5.60	30.4 ✓	75.8 ✓	2.28	40.9 ✓	.31"	$\frac{l}{1390}$ ✓
467	W8x40	19.69	6.07	39.8 ✓	99.3 ✓	2.97	53.3 ✓	.33"	$\frac{l}{1415}$ ✓
539	W8x48	26.23	7.01	49.0 ✓	122 ✓	3.40	61.0 ✓	.46"	$\frac{l}{1172}$ ✓

NOTE: LTB WILL NOT CONTROL BEAM CAPACITIES BECAUSE OF CONCRETE LOCKING IN COMPRESSION FLANGES.

→ ALL OF THESE BEAM SIZES ARE GOOD FOR FLEXURE, SHEAR, AND DEFLECTION.

$\Delta_{W8x18} = .046" = k\left(\frac{l^4}{I}\right) \rightarrow k = \frac{(.046")(39.6\ in^4)}{(203\ in)^4} = 1E\text{-}9$

2A ENGINEERING, INC.

CLIENT VFP, INC.
PROJECT

LIFT POINT DETAIL

DATE 12/2/09
JOB NO. 1140
BY BKY
PAGE 6.1

REV. 3/9/12

LIFT POINT DETAIL

LOCATED 8' OC.

$P = 520\#/' \times 8' = 4160\#$

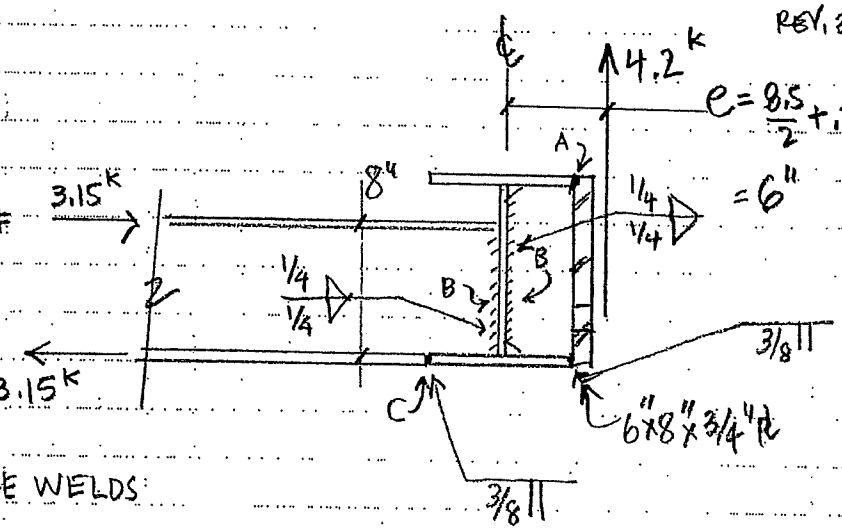

WELD A 2-3/8" SQUARE WELDS

$(.375)(2)(6")(21\,ksi) = 95^K > 4.2^K$ ✓ 3/8" SQUARE WELD OK

WELD B 2-6" x 1/4" FILLET WELDS

$$f_v = \frac{4.2^K}{(2)(6")(.25)(.707)} = 1.98\ ksi$$

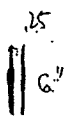

$$f_b = \frac{(4.2^K \times 6")}{2.12\ in^3} = 11.9\ ksi$$

$$S = \frac{bh^2}{6} = \frac{(2)(.707")(.25")(6)^2}{6} = 2.12\ in^3$$

$$f_r = \sqrt{f_v + f_b'} = \sqrt{1.98^2 + 11.9^2} = 12.1\ ksi < 21\ ksi$$ ✓

2-6" x 1/4" FILLET WELDS OK

WELD C 3/8" SQUARE WELD

$T = 3.15^K$ $T_{all} = (3.94")(.375)(21\,ksi) = 31^K > 3.15^K$ ✓

3/8" SQUARE WELD OK

APPROVED: STATE OF CA - CERTIFIED DAA
Based on the requirements of title 25 California code of regulations
Chapter 3 subchapter 2 Commercial Modular
Date: 04-25-2023 Expires: 07-31-2024
Approval # PFS: 23-002714
THIS APPROVAL DOES NOT AUTHORIZE OR APPROVE ANY OMISSION OR DEVIATION FROM THE REQUIREMENTS OF STATE LAWS OR APPLICABLE LOCAL ORDINANCES . THIS APPROVAL IS LIMITED TO FACTORY-BUILT PORTION ONLY.
PFS CORPORATION - Cottage Grove, WI

KH2A ENGINEERING, INC.

CLIENT VFP, INC.
PROJECT
WIND LOADS

DATE 9/28/15
JOB NO. 1140
BY BKY
PAGE 7.1

WIND LOADS

130 MPH, EXPOSURE C PER VFP

ROOF SLOPE

$\tan\theta = \frac{3''}{144''}$, $\theta = 1.2°$ FLAT

METHOD 1 - MAIN WIND FORCE RESISTING SYSTEM
SIMPLIFIED DESIGN WIND PRESSURES

ZONES

MPH	A	C	E	F	G	H
130	26.8	17.8	-32.2	-18.3	-22.4	-14.2

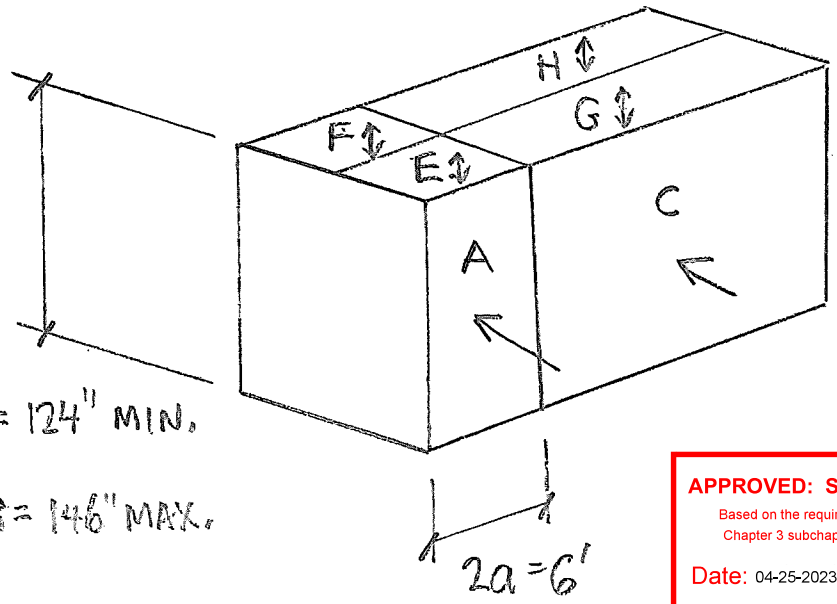

110" + 6 + 8 = 124" MIN.

132" + 6 + 8 = 146" MAX.

APPROVED: STATE OF CA - CERTIFIED DAA
Based on the requirements of title 25 California code of regulations
Chapter 3 subchapter 2 Commercial Modular
Date: 04-25-2023 Expires: 07-31-2024
Approval # PFS: 23-002714
THIS APPROVAL DOES NOT AUTHORIZE OR APPROVE ANY OMISSION OR DEVIATION FROM THE REQUIREMENTS OF STATE LAWS OR APPLICABLE LOCAL ORDINANCES . THIS APPROVAL IS LIMITED TO FACTORY-BUILT PORTION ONLY.
PFS CORPORATION - Cottage Grove, WI

KH2A ENGINEERING, INC.

CLIENT VFP, INC.
PROJECT

WIND SHEAR DEMANDS

DATE 9/28/15
JOB NO. 1140
BY BKY
PAGE 7.2

ENDWALL SHEAR DEMANDS

ASSUME 50% OF THE INCIDENT WIND FORCE GOES UP TO THE ROOF DIAPHRAGM, THE OTHER 50% GOES DOWN.

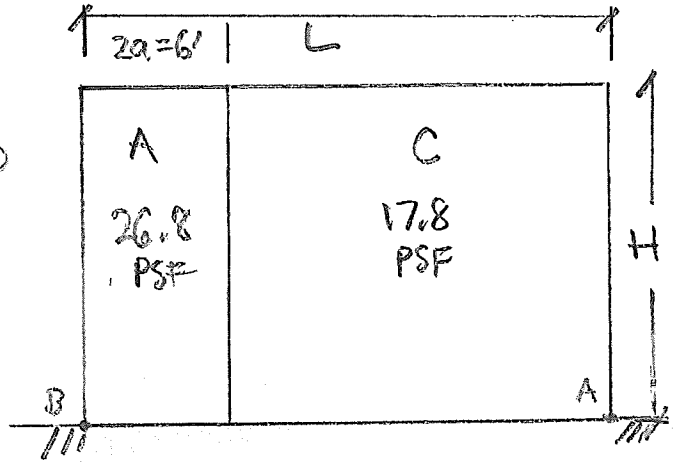

TAKE MOMENT ABOUT LINE A,

WORST WALL SHEAR OCCURS AT LINE B, WHERE "A" ZONE PRESSURES OCCUR

$$V_{MAX} = \frac{\left[(26.8)\times(6')(H)(L-3') + (17.8)(L-6)(H)\left(\frac{L-6}{2}\right)\right]\times 1.21}{L\times 2}$$

("A", 2a, "C", λ_0)

THESE SHEAR DEMAND HAVE BEEN TABULATED IN SPREAD SHEET FORMAT.

SHEARWALL FORCES

BY TEST, CONNECTIONS AT BOUNDARY FAILED UNDER 3748# (ENC II)

FOR F.S. = 2.5, LIMIT T = 1500#
WITHOUT RE INFORCEMENT
BY ADDITION OF SIMPSON HOLD DOWNS

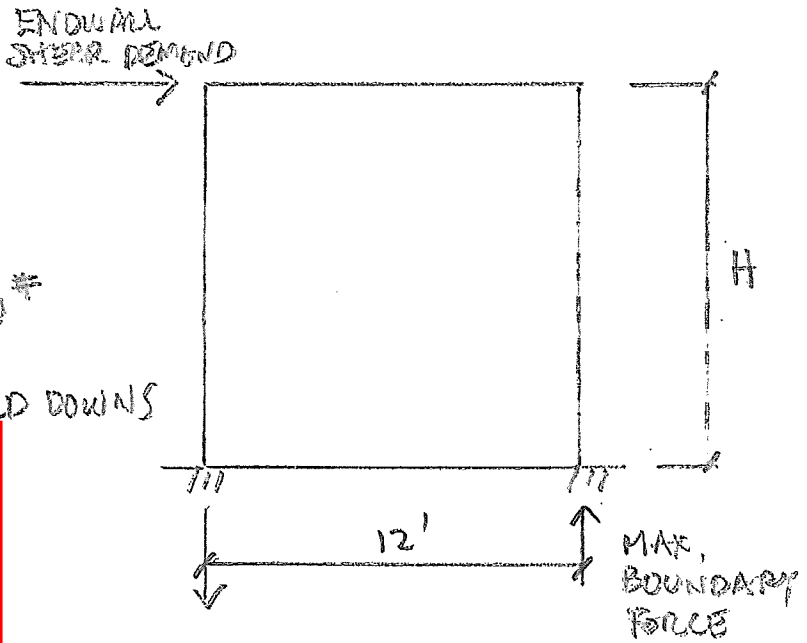

APPROVED: STATE OF CA - CERTIFIED DAA
Based on the requirements of title 25 California code of regulations
Chapter 3 subchapter 2 Commercial Modular
Date: 04-25-2023 Expires: 07-31-2024
Approval # PFS: 23-002714
THIS APPROVAL DOES NOT AUTHORIZE OR APPROVE ANY OMISSION OR DEVIATION FROM THE REQUIREMENTS OF STATE LAWS OR APPLICABLE LOCAL ORDINANCES . THIS APPROVAL IS LIMITED TO , FACTORY-BUILT PORTION ONLY.
PFS CORPORATION - Cottage Grove, WI

7.3

Endwall wind shear demands 130 MPH Exposure C VFP Lightweight Buildings 12 feet wide

124 inch tall buildings

Zone A Pressure, psf	Zone C Pressure , psf	a,feet	Building Height H, feet	Building Length, L, feet	Lambda, Exposure C	Max wall wind shear demand, pounds	Max Boundary Force, pounds	Total Transverse Wind Shear	Total Transverse Overturning Moment	Total Building Weight	Required Friction	OT F.S.	Anchorage Required?	Wall Shear Demand, PLF	Diaphragm Chord Force,
26.8	17.8	3	10.33	12	1.21	552	475	2007	10366	8304	0.62	3.59	Yes	46	138
26.8	17.8	3	10.33	14	1.21	626	539	2274	11745	9320	0.64	3.50	Yes	52	183
26.8	17.8	3	10.33	16	1.21	698	601	2541	13124	10336	0.66	3.44	Yes	58	233
26.8	17.8	3	10.33	18	1.21	769	662	2808	14503	11352	0.67	3.39	Yes	64	289
26.8	17.8	3	10.33	20	1.21	840	723	3075	15881	12368	0.68	3.35	Yes	70	350
26.8	17.8	3	10.33	22	1.21	909	783	3342	17260	13384	0.69	3.31	Yes	76	417
26.8	17.8	3	10.33	24	1.21	978	842	3609	18639	14400	0.70	3.28	Yes	82	489
26.8	17.8	3	10.33	26	1.21	1047	901	3876	20018	15416	0.71	3.25	Yes	87	567
26.8	17.8	3	10.33	28	1.21	1115	960	4143	21397	16432	0.72	3.23	Yes	93	651
26.8	17.8	3	10.33	30	1.21	1183	1019	4410	22776	17448	0.72	3.21	Yes	99	740
26.8	17.8	3	10.33	32	1.21	1251	1077	4677	24155	18464	0.73	3.19	Yes	104	834
26.8	17.8	3	10.33	34	1.21	1319	1136	4944	25534	19480	0.73	3.17	Yes	110	935
26.8	17.8	3	10.33	36	1.21	1387	1194	5211	26913	20496	0.74	3.16	Yes	116	1040
26.8	17.8	3	10.33	38	1.21	1455	1252	5478	28292	21512	0.74	3.15	Yes	121	1152
26.8	17.8	3	10.33	40	1.21	1522	1310	5745	29671	22528	0.75	3.13	Yes	127	1269
26.8	17.8	3	10.33	42	1.21	1590	1368	6012	31050	23544	0.75	3.12	Yes	132	1391
26.8	17.8	3	10.33	44	1.21	1657	1426	6279	32429	24560	0.75	3.11	Yes	138	1519

135 inch tall buildings

Zone A Pressure, psf	Zone C Pressure , psf	a,feet	Building Height H, feet	Building Length, L, feet	Lambda, Exposure C	Max wall wind shear demand, pounds	Max Boundary Force, pounds	Total Transverse Wind Shear	Total Transverse Overturning Moment	Total Building Weight	Required Friction	OT F.S.	Anchorage Required?	Wall Shear Demand, PLF	Diaphragm Chord Force,
26.8	17.8	3	11.25	12	1.21	602	564	2186	12294	8726	0.63	3.23	Yes	50	150
26.8	17.8	3	11.25	14	1.21	682	639	2476	13930	9778	0.65	3.15	Yes	57	199
26.8	17.8	3	11.25	16	1.21	761	713	2767	15565	10829	0.66	3.09	Yes	63	254
26.8	17.8	3	11.25	18	1.21	838	786	3058	17201	11880	0.68	3.04	Yes	70	314
26.8	17.8	3	11.25	20	1.21	914	857	3349	18836	12931	0.69	3.00	Yes	76	381
26.8	17.8	3	11.25	22	1.21	990	928	3639	20472	13982	0.70	2.97	Yes	83	454
26.8	17.8	3	11.25	24	1.21	1065	999	3930	22107	15034	0.71	2.94	Yes	89	533
26.8	17.8	3	11.25	26	1.21	1140	1069	4221	23743	16085	0.72	2.91	Yes	95	618
26.8	17.8	3	11.25	28	1.21	1215	1139	4512	25378	17136	0.73	2.89	Yes	101	708
26.8	17.8	3	11.25	30	1.21	1289	1208	4802	27014	18187	0.73	2.87	Yes	107	806
26.8	17.8	3	11.25	32	1.21	1363	1278	5093	28650	19238	0.74	2.85	Yes	114	909
26.8	17.8	3	11.25	34	1.21	1437	1347	5384	30285	20290	0.74	2.84	Yes	120	1018
26.8	17.8	3	11.25	36	1.21	1511	1416	5675	31921	21341	0.75	2.82	Yes	126	1133
26.8	17.8	3	11.25	38	1.21	1584	1485	5966	33556	22392	0.75	2.81	Yes	132	1254
26.8	17.8	3	11.25	40	1.21	1658	1554	6256	35192	23443	0.76	2.80	Yes	138	1381
26.8	17.8	3	11.25	42	1.21	1731	1623	6547	36827	24494	0.76	2.79	Yes	144	1515
26.8	17.8	3	11.25	44	1.21	1805	1692	6838	38463	25546	0.76	2.78	Yes	150	1654

146 inch tall buildings

Zone A Pressure, psf	Zone C Pressure , psf	a,feet	Building Height H, feet	Building Length, L, feet	Lambda, Exposure C	Max wall wind shear demand, pounds	Max Boundary Force, pounds	Total Transverse Wind Shear	Total Transverse Overturning Moment	Total Building Weight	Required Friction	OT F.S.	Anchorage Required?	Wall Shear Demand, PLF	Diaphragm Chord Force,
26.8	17.8	3	12.17	12	1.21	651	660	2364	14387	9168	0.63	2.94	Yes	54	163
26.8	17.8	3	12.17	14	1.21	738	748	2679	16301	10256	0.65	2.87	Yes	61	215
26.8	17.8	3	12.17	16	1.21	823	835	2993	18215	11344	0.67	2.81	Yes	69	274
26.8	17.8	3	12.17	18	1.21	907	919	3308	20129	12432	0.68	2.76	Yes	76	340
26.8	17.8	3	12.17	20	1.21	989	1003	3623	22043	13520	0.70	2.72	Yes	82	412
26.8	17.8	3	12.17	22	1.21	1071	1086	3937	23957	14608	0.71	2.69	Yes	89	491
26.8	17.8	3	12.17	24	1.21	1152	1169	4252	25871	15696	0.72	2.66	Yes	96	576
26.8	17.8	3	12.17	26	1.21	1233	1251	4566	27785	16784	0.73	2.64	Yes	103	668
26.8	17.8	3	12.17	28	1.21	1314	1333	4881	29699	17872	0.73	2.62	Yes	109	766
26.8	17.8	3	12.17	30	1.21	1394	1414	5195	31613	18960	0.74	2.60	Yes	116	871
26.8	17.8	3	12.17	32	1.21	1474	1495	5510	33527	20048	0.75	2.58	Yes	123	983
26.8	17.8	3	12.17	34	1.21	1554	1576	5824	35441	21136	0.75	2.57	Yes	130	1101
26.8	17.8	3	12.17	36	1.21	1634	1657	6139	37355	22224	0.76	2.55	Yes	136	1226
26.8	17.8	3	12.17	38	1.21	1714	1738	6453	39269	23312	0.76	2.54	Yes	143	1357
26.8	17.8	3	12.17	40	1.21	1793	1819	6768	41183	24400	0.77	2.53	Yes	149	1494
26.8	17.8	3	12.17	42	1.21	1873	1899	7082	43097	25488	0.77	2.52	Yes	156	1639
26.8	17.8	3	12.17	44	1.21	1952	1980	7397	45011	26576	0.77	2.51	Yes	163	1790

REQUIRE SIMPSON HOLD DOWNS

APPROVED: STATE OF CA - CERTIFIED DAA

Based on the requirements of title 25 California code of regulations
Chapter 3 subchapter 2 Commercial Modular

Date: 04-25-2023 Expires: 07-31-2024

Approval # PFS: 23-002714

THIS APPROVAL DOES NOT AUTHORIZE OR APPROVE ANY OMISSION OR DEVIATION FROM THE REQUIREMENTS OF STATE LAWS OR APPLICABLE LOCAL ORDINANCES . THIS APPROVAL IS LIMITED TO FACTORY-BUILT PORTION ONLY.

PFS CORPORATION - Cottage Grove, WI

H2A ENGINEERING, INC.

CLIENT VFP, INC.
PROJECT
SEISMIC

DATE 11/30/09
JOB NO 1140
BY BKY
PAGE 8.1

REV. 3/9/12

SEISMIC BASE SHEAR

$S_S = 1.85$ (GIVEN BY VFP)

$F_a = 1.0$ $(S_S > 1.25)$

$S_{MS} = F_a S_S = 1.85$ CLASS D SOILS

$S_{DS} = \frac{2}{3} S_{MS} = (.67)(1.85) = 1.24$

$C_S = \frac{S_{DS}}{\left(\frac{R}{I}\right)} = \frac{1.24}{\left(\frac{6.5}{1.0}\right)} = .19$ $R = 6.5$ LIGHT FRAMED WALLS SHEATHED WITH STEEL SHEETS

$I = 1.0$ IMPORTANCE FACTOR

$V = C_S W$

SEISMIC WEIGHT = ROOF ASSEMBLY + $\frac{1}{2}$ WALLS FOR CALCULATING SHEARWALL DEMANDS

SEISMIC WEIGHT = ENTIRE BUILDING WEIGHT FOR CALCULATING STABILITY AND ANCHORAGE REQUIREMENTS

TWO SPREADSHEETS ARE REQUIRED TO TABULATE SEISMIC FORCES BECAUSE OF TWO TYPES OF FLOOR ASSEMBLIES.

APPROVED: STATE OF CA - CERTIFIED DAA
Based on the requirements of title 25 California code of regulations
Chapter 3 subchapter 2 Commercial Modular
Date: 04-25-2023 Expires: 07-31-2024
Approval # PFS: 23-002714
THIS APPROVAL DOES NOT AUTHORIZE OR APPROVE ANY OMISSION OR DEVIATION FROM THE REQUIREMENTS OF STATE LAWS OR APPLICABLE LOCAL ORDINANCES . THIS APPROVAL IS LIMITED TO FACTORY-BUILT PORTION ONLY.
PFS CORPORATION - Cottage Grove, WI

2021 IBC
ASCE 7-16
3/9/12
8.2

Building Weights and Seismic Worksheet R=6.5 I=1.0

124 inch Tall Buildings, 12 feet wide, lightweight floor element

Length, feet	Wall Perimeter, feet	Wall Area, sq. ft.	Wall Unit wt.	Wall Weight	Roof Area	Roof Unit wt.	Roof Weight	Floor Area	Floor Unit Wt.	Floor Weight	Total Building Weight	Seismic Weight	Seismic Base Shear	Wall Shear, ASD	Wind Govern?
12	48	442	10	4416	144	10	1440	144	17	2448	8304	3648	1578	243	Yes
14	52	478	10	4784	168	10	1680	168	17	2856	9320	4072	1771	271	Yes
16	56	515	10	5152	192	10	1920	192	17	3264	10336	4496	1964	299	Yes
18	60	552	10	5520	216	10	2160	216	17	3672	11352	4920	2157	327	Yes
20	64	589	10	5888	240	10	2400	240	17	4080	12368	5344	2350	355	Yes
22	68	626	10	6256	264	10	2640	264	17	4488	13384	5768	2543	384	Yes
24	72	662	10	6624	288	10	2880	288	17	4896	14400	6192	2736	412	Yes
26	76	699	10	6992	312	10	3120	312	17	5304	15416	6616	2929	440	Yes
28	80	736	10	7360	336	10	3360	336	17	5712	16432	7040	3122	468	Yes
30	84	773	10	7728	360	10	3600	360	17	6120	17448	7464	3315	496	Yes
32	88	810	10	8096	384	10	3840	384	17	6528	18464	7888	3508	525	Yes
34	92	846	10	8464	408	10	4080	408	17	6936	19480	8312	3701	553	Yes
36	96	883	10	8832	432	10	4320	432	17	7344	20496	8736	3894	581	Yes
38	100	920	10	9200	456	10	4560	456	17	7752	21512	9160	4087	609	Yes
40	104	957	10	9568	480	10	4800	480	17	8160	22528	9584	4280	637	Yes
42	108	994	10	9936	504	10	5040	504	17	8568	23544	10008	4473	666	Yes
44	112	1030	10	10304	528	10	5280	528	17	8976	24560	10432	4666	694	Yes

APPROVED: STATE OF CA - CERTIFIED DAA
Based on the requirements of title 25 California code of regulations
Chapter 3 subchapter 2 Commercial Modular
Date: 04-25-2023 Expires: 07-31-2024
Approval # PFS: 23-002714
THIS APPROVAL DOES NOT AUTHORIZE OR APPROVE ANY OMISSION OR DEVIATION FROM THE REQUIREMENTS OF STATE LAWS OR APPLICABLE LOCAL ORDINANCES . THIS APPROVAL IS LIMITED TO FACTORY-BUILT PORTION ONLY.
PFS CORPORATION - Cottage Grove, WI

135 inch Tall Buildings, 12 feet wide, lightweight floor element

Length, feet	Wall Perimeter, feet	Wall Area, sq. ft.	Wall Unit wt.	Wall Weight	Roof Area	Roof Unit wt.	Roof Weight	Floor Area	Floor Unit Wt.	Floor Weight	Total Building Weight	Seismic Weight	Seismic Base Shear	Wall Shear, ASD	Wind Govern?
12	48	484	10	4838	144	10	1440	144	17	2448	8726	3859	1658	257	Yes
14	52	524	10	5242	168	10	1680	168	17	2856	9778	4301	1858	286	Yes
16	56	564	10	5645	192	10	1920	192	17	3264	10829	4742	2057	315	Yes
18	60	605	10	6048	216	10	2160	216	17	3672	11880	5184	2257	345	Yes
20	64	645	10	6451	240	10	2400	240	17	4080	12931	5626	2457	374	Yes
22	68	685	10	6854	264	10	2640	264	17	4488	13982	6067	2657	403	Yes
24	72	726	10	7258	288	10	2880	288	17	4896	15034	6509	2856	433	Yes
26	76	766	10	7661	312	10	3120	312	17	5304	16085	6950	3056	462	Yes
28	80	806	10	8064	336	10	3360	336	17	5712	17136	7392	3256	492	Yes
30	84	847	10	8467	360	10	3600	360	17	6120	18187	7834	3456	521	Yes
32	88	887	10	8870	384	10	3840	384	17	6528	19238	8275	3655	550	Yes
34	92	927	10	9274	408	10	4080	408	17	6936	20290	8717	3855	580	Yes
36	96	968	10	9677	432	10	4320	432	17	7344	21341	9158	4055	609	Yes
38	100	1008	10	10080	456	10	4560	456	17	7752	22392	9600	4254	638	Yes
40	104	1048	10	10483	480	10	4800	480	17	8160	23443	10042	4454	668	Yes
42	108	1089	10	10886	504	10	5040	504	17	8568	24494	10483	4654	697	Yes
44	112	1129	10	11290	528	10	5280	528	17	8976	25546	10925	4854	726	Yes

146 inch Tall Buildings, 12 feet wide, lightweight floor element

Length, feet	Wall Perimeter, feet	Wall Area, sq. ft.	Wall Unit wt.	Wall Weight	Roof Area	Roof Unit wt.	Roof Weight	Floor Area	Floor Unit Wt.	Floor Weight	Total Building Weight	Seismic Weight	Seismic Base Shear	Wall Shear, ASD	Wind Govern?
12	48	528	10	5280	144	10	1440	144	17	2448	9168	4080	1742	271	Yes
14	52	572	10	5720	168	10	1680	168	17	2856	10256	4540	1949	302	Yes
16	56	616	10	6160	192	10	1920	192	17	3264	11344	5000	2155	333	Yes
18	60	660	10	6600	216	10	2160	216	17	3672	12432	5460	2362	363	Yes
20	64	704	10	7040	240	10	2400	240	17	4080	13520	5920	2569	394	Yes
22	68	748	10	7480	264	10	2640	264	17	4488	14608	6380	2776	424	Yes
24	72	792	10	7920	288	10	2880	288	17	4896	15696	6840	2982	455	Yes
26	76	836	10	8360	312	10	3120	312	17	5304	16784	7300	3189	485	Yes
28	80	880	10	8800	336	10	3360	336	17	5712	17872	7760	3396	516	Yes
30	84	924	10	9240	360	10	3600	360	17	6120	18960	8220	3602	547	Yes
32	88	968	10	9680	384	10	3840	384	17	6528	20048	8680	3809	577	Yes
34	92	1012	10	10120	408	10	4080	408	17	6936	21136	9140	4016	608	Yes
36	96	1056	10	10560	432	10	4320	432	17	7344	22224	9600	4223	638	Yes
38	100	1100	10	11000	456	10	4560	456	17	7752	23312	10060	4429	669	Yes
40	104	1144	10	11440	480	10	4800	480	17	8160	24400	10520	4636	700	Yes
42	108	1188	10	11880	504	10	5040	504	17	8568	25488	10980	4843	730	Yes
44	112	1232	10	12320	528	10	5280	528	17	8976	26576	11440	5049	761	Yes

2021 IBC
ASCE 7-16

8.3

Building Weights and Seismic Worksheet R=6.5 I=1.0

124 Inch Tall Buildings, 12 feet wide, concrete floor element

Length, feet	Wall Perimeter, feet	Wall Area, sq. ft.	Wall Unit wt.	Wall Weight	Roof Area	Roof Unit wt.	Roof Weight	Floor Area	Floor Unit Wt.	Floor Weight	Total Building Weight	Seismic Weight	Seismic Base Shear	Wall Shear, ASD	Wind Govern?
12	48	442	10	4416	144	10	1440	144	31	4464	10320	3648	1961	243	Yes
14	52	478	10	4784	168	10	1680	168	31	5208	11672	4072	2218	271	Yes
16	56	515	10	5152	192	10	1920	192	31	5952	13024	4496	2475	299	Yes
18	60	552	10	5520	216	10	2160	216	31	6696	14376	4920	2731	327	Yes
20	64	589	10	5888	240	10	2400	240	31	7440	15728	5344	2988	355	Yes
22	68	626	10	6256	264	10	2640	264	31	8184	17080	5768	3245	384	Yes
24	72	662	10	6624	288	10	2880	288	31	8928	18432	6192	3502	412	Yes
26	76	699	10	6992	312	10	3120	312	31	9672	19784	6616	3759	440	Yes
28	80	736	10	7360	336	10	3360	336	31	10416	21136	7040	4016	468	Yes
30	84	773	10	7728	360	10	3600	360	31	11160	22488	7464	4273	496	Yes
32	88	810	10	8096	384	10	3840	384	31	11904	23840	7888	4530	525	Yes
34	92	846	10	8464	408	10	4080	408	31	12648	25192	8312	4786	553	Yes
36	96	883	10	8832	432	10	4320	432	31	13392	26544	8736	5043	581	Yes
38	100	920	10	9200	456	10	4560	456	31	14136	27896	9160	5300	609	Yes
40	104	957	10	9568	480	10	4800	480	31	14880	29248	9584	5557	637	Yes
42	108	994	10	9936	504	10	5040	504	31	15624	30600	10008	5814	666	Yes
44	112	1030	10	10304	528	10	5280	528	31	16368	31952	10432	6071	694	Yes

APPROVED: STATE OF CA - CERTIFIED DAA
Based on the requirements of title 25 California code of regulations
Chapter 3 subchapter 2 Commercial Modular
Date: 04-25-2023 Expires: 07-31-2024
Approval # PFS: 23-002714
THIS APPROVAL DOES NOT AUTHORIZE OR APPROVE ANY OMISSION OR DEVIATION FROM THE REQUIREMENTS OF STATE LAWS OR APPLICABLE LOCAL ORDINANCES . THIS APPROVAL IS LIMITED TO FACTORY-BUILT PORTION ONLY.
PFS CORPORATION - Cottage Grove, WI

135 Inch Tall Buildings, 12 feet wide, concrete floor element

Length, feet	Wall Perimeter, feet	Wall Area, sq. ft.	Wall Unit wt.	Wall Weight	Roof Area	Roof Unit wt.	Roof Weight	Floor Area	Floor Unit Wt.	Floor Weight	Total Building Weight	Seismic Weight	Seismic Base Shear	Wall Shear, ASD	Wind Govern?
12	48	484	10	4838	144	10	1440	144	31	4464	10742	3859	2041	257	Yes
14	52	524	10	5242	168	10	1680	168	31	5208	12130	4301	2305	286	Yes
16	56	564	10	5645	192	10	1920	192	31	5952	13517	4742	2568	315	Yes
18	60	605	10	6048	216	10	2160	216	31	6696	14904	5184	2832	345	Yes
20	64	645	10	6451	240	10	2400	240	31	7440	16291	5626	3095	374	Yes
22	68	685	10	6854	264	10	2640	264	31	8184	17678	6067	3359	403	Yes
24	72	726	10	7258	288	10	2880	288	31	8928	19066	6509	3622	433	Yes
26	76	766	10	7661	312	10	3120	312	31	9672	20453	6950	3886	462	Yes
28	80	806	10	8064	336	10	3360	336	31	10416	21840	7392	4150	492	Yes
30	84	847	10	8467	360	10	3600	360	31	11160	23227	7834	4413	521	Yes
32	88	887	10	8870	384	10	3840	384	31	11904	24614	8275	4677	550	Yes
34	92	927	10	9274	408	10	4080	408	31	12648	26002	8717	4940	580	Yes
36	96	968	10	9677	432	10	4320	432	31	13392	27389	9158	5204	609	Yes
38	100	1008	10	10080	456	10	4560	456	31	14136	28776	9600	5467	638	Yes
40	104	1048	10	10483	480	10	4800	480	31	14880	30163	10042	5731	668	Yes
42	108	1089	10	10886	504	10	5040	504	31	15624	31550	10483	5995	697	Yes
44	112	1129	10	11290	528	10	5280	528	31	16368	32938	10925	6258	726	Yes

146 Inch Tall Buildings, 12 feet wide, concrete floor element

Length, feet	Wall Perimeter, feet	Wall Area, sq. ft.	Wall Unit wt.	Wall Weight	Roof Area	Roof Unit wt.	Roof Weight	Floor Area	Floor Unit Wt.	Floor Weight	Total Building Weight	Seismic Weight	Seismic Base Shear	Wall Shear, ASD	Wind Govern?
12	48	528	10	5280	144	10	1440	144	31	4464	11184	4080	2125	271	Yes
14	52	572	10	5720	168	10	1680	168	31	5208	12608	4540	2396	302	Yes
16	56	616	10	6160	192	10	1920	192	31	5952	14032	5000	2666	333	Yes
18	60	660	10	6600	216	10	2160	216	31	6696	15456	5460	2937	363	Yes
20	64	704	10	7040	240	10	2400	240	31	7440	16880	5920	3207	394	Yes
22	68	748	10	7480	264	10	2640	264	31	8184	18304	6380	3478	424	Yes
24	72	792	10	7920	288	10	2880	288	31	8928	19728	6840	3748	455	Yes
26	76	836	10	8360	312	10	3120	312	31	9672	21152	7300	4019	485	Yes
28	80	880	10	8800	336	10	3360	336	31	10416	22576	7760	4289	516	Yes
30	84	924	10	9240	360	10	3600	360	31	11160	24000	8220	4560	547	Yes
32	88	968	10	9680	384	10	3840	384	31	11904	25424	8680	4831	577	Yes
34	92	1012	10	10120	408	10	4080	408	31	12648	26848	9140	5101	608	Yes
36	96	1056	10	10560	432	10	4320	432	31	13392	28272	9600	5372	638	Yes
38	100	1100	10	11000	456	10	4560	456	31	14136	29696	10060	5642	669	Yes
40	104	1144	10	11440	480	10	4800	480	31	14880	31120	10520	5913	700	Yes
42	108	1188	10	11880	504	10	5040	504	31	15624	32544	10980	6183	730	Yes
44	112	1232	10	12320	528	10	5280	528	31	16368	33968	11440	6454	761	Yes

$\frac{761}{12'-3"}$ * = 85 PLF

KH2A ENGINEERING, INC.

CLIENT VFP
PROJECT

DATE 9/28/15
JOB NO. 1140
BY BKY
PAGE 9.1

NOMINAL STRENGTH OF SHEAR WALLS

BOUNDARY STRENGTH ESTABLISHED BY TEST 3748# (EWC II)

BOUNDARY ALLOWABLE = $\frac{3748^{\#}}{2.5} = 1500^{\#}$

SHEAR STRENGTH ESTABLISHED BY TEST > 635#/LF (EWC I)

SHEAR STRENGTH ALLOWABLE = $\frac{635\ PLF}{2.5} = 254\ PLF$

> 163 PLF (WIND DEMAND)

> 85 PLF (SEISMIC DEMAND)

NOTE: LARGER BUILDINGS EXCEED 1500# BOUNDARY ALLOWABLE FORCE

ADD SIMPSON HOLD DOWNS SHOWN ON FOLLOWING PAGES (S/HD8S)

APPROVED: STATE OF CA - CERTIFIED DAA
Based on the requirements of title 25 California code of regulations
Chapter 3 subchapter 2 Commercial Modular
Date: 04-25-2023 Expires: 07-31-2024
Approval # PFS: 23-002714
THIS APPROVAL DOES NOT AUTHORIZE OR APPROVE ANY OMISSION OR DEVIATION FROM THE REQUIREMENTS OF STATE LAWS OR APPLICABLE LOCAL ORDINANCES . THIS APPROVAL IS LIMITED TO FACTORY-BUILT PORTION ONLY.
PFS CORPORATION - Cottage Grove, WI

S/HDS & S/HDB *Holdowns*

SIMPSON Strong-Tie

9.2

The improved S/HD holdowns have been designed for installation with either screws or bolts.

S/HD8S, S/HD10S and S/HD15S use #14 screws, fewer screws are required so installation is faster.

S/HD8B, S/HD10B and S/HD15B for bolt on applications where the cold-formed stud manufacturer can pre-punch the bolt holes.

MATERIAL: See table.

FINISH: Simpson gray paint. Hot-dip galvanized is available; see Corrosion-Resistant Connectors, page 11.

INSTALLATION:
- Use all specified fasteners; some models have extra fastener holes. See General Notes.
- Anchor bolt washer is not required.
- Standard washers are required on stud bolt nuts for model S/HDB.
- Thin wall socket (OD=2" maximum) is required for S/HD15 to tighten the 1" anchor bolt.

CODE: See page 7 for Code Listing Key Chart.

NEW

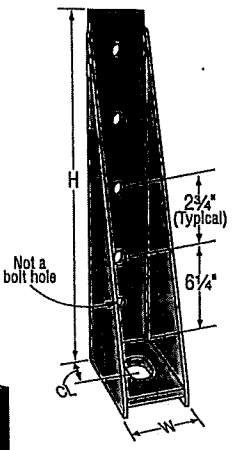

S/HD15B

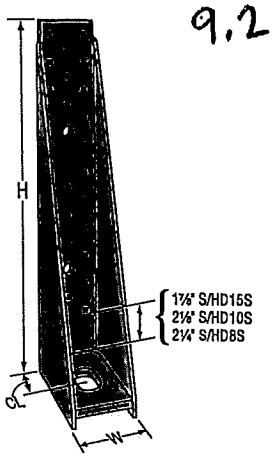

S/HD15S
(S/HD8S and S/HD10S similar)

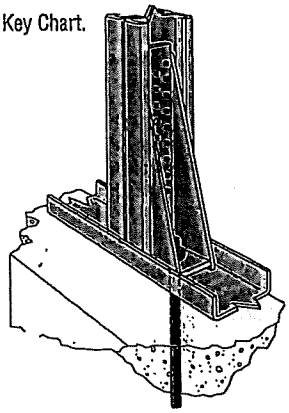

Typical S/HD10S back-to-back stud installation

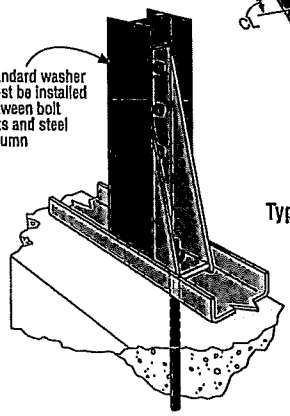

Typical S/HD10B PACO Column Installation
**PACO Column is pre-drilled ready to accept S/HDB*

Available 2nd Quarter 2006

■ *Available with additional corrosion protection. Check with factory.*

Model No.	Material Thickness: Body mil (ga)	Material Thickness: Base inch	Dimensions: W	Dimensions: H	Dimensions: CL	Fasteners: Fdn. Anchor Dia.	Fasteners: Stud Fasteners	Avg. Ult.	Allowable Tension Loads: 2- 33 mil (2-20ga) back-to-back stud (100)	(133)	2- 43 mil (2-18ga) back-to-back stud (100)	(133)	2- 54 mil (2-16ga) back-to-back stud (100)	(133)	1- 97 mil minimum (1-12 ga) Single PACO Column (100)	(133)	Holdown Deflection at Highest Allowable Design Load	Code Ref.
S/HD8S	126 (10 ga)	½	2⅝	11	1½	⅞	17- #14	41115	8580	8580	11070	11070	11070	11070	11470	11470	0.0695	160
S/HD10S	126 (10 ga)	½	2⅝	13½	1½	⅞	22- #14	41115	8580	8580	11120	11120	12200	12200	14840	14840	0.0960	
S/HD15S	171 (7 ga)	½	2⅞	17	1⅜	1	30- #14	49143	8580	8580	11120	11120	13500	13500	16420	16420	0.0970	
S/HD8B	126 (10 ga)	½	2⅝	11	1½	⅞	2- ¾ Dia	41115	3895	5195	5345	7125	8925	10215	8925	11900	0.0742	
S/HD10B	126 (10 ga)	½	2⅝	13½	1½	⅞	3- ¾ Dia	41115	5840	7790	8015	10690	13385	15320	13385	15635	0.1018	
S/HD15B	171 (7 ga)	½	2⅞	17	1⅜	1	4- ¾ Dia	49143	7790	7865	10690	11510	17560	18295	17850	18295	0.1038	

1. The Designer shall specify the anchor embedment and configuration. See SSTB Anchor Bolts and Additional Anchor Design.
2. Back-to-back stud members are required unless otherwise specified.
3. AVG ULT are based on static load test conducted on structural steel jig.
4. ¼" self-drilling screws can be substituted for #14.
5. See page 16 and 17 for anchor bolt retrofit.
6. Deflection at Highest Allowable Design Load: The deflection of a holdown measured between the anchor bolt and the strap portion of the holdown when loaded to the highest allowable load listed in the catalog table. This movement is strictly due to the holdown deformation under a static load test conducted on a steel jig.
7. Tabulated loads may not be increased.

Sources of Deflection at the Shearwall Holdown Connections

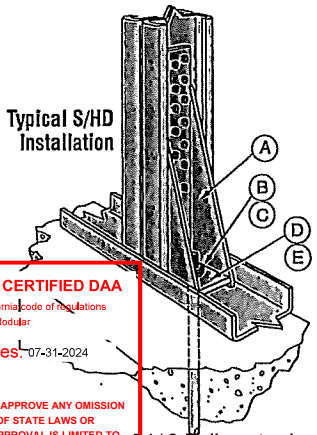

Typical S/HD Installation

A. Eccentricity in stud—when a holdown is installed on only one side of the stud, an eccentricity exists during loading which can cause additional movement in the shearwall system.

B. Nut spin—unrestrained anchor bolt nuts can spin loose during cyclic loading; the use of steel nylon locking nuts or thread adhesive may prevent nut spin.

C. Lack of nut tightening—additional movement can occur when nuts are not tightened sufficiently.

D. Deflection of the holdown—deflection can occur in the holdown under load caused by stresses due to earthquake or high wind.

E. Vertical deflection at the holdown seat caused by stud rotation—lateral displacement at the top of the wall rotates the stud around its base causing the holdown base plate to displace vertically.

APPROVED: STATE OF CA - CERTIFIED DAA
Based on the requirements of title 25 California code of regulations chapter 3 subchapter 2 Commercial Modular
Date: 04-25-2023 Expires: 07-31-2024
Approval # PFS: 23-002714
THIS APPROVAL DOES NOT AUTHORIZE OR APPROVE ANY OMISSION OR DEVIATION FROM THE REQUIREMENTS OF STATE LAWS OR APPLICABLE LOCAL ORDINANCES . THIS APPROVAL IS LIMITED TO FACTORY-BUILT PORTION ONLY.
PFS CORPORATION - Cottage Grove, WI

Catalog C-CFS06 © Copyright 2005 SIMPSON STRONG-TIE CO., INC.
Catalog C-CFS06 © Copyright 2005 SIMPSON STRONG-TIE CO., INC.

9.3

S/HD *Holdowns*

For less fasteners, higher loads, and narrow CFS studs, reference S/HDS and S/HDB.

MATERIAL: S/HD8 and S/HD10 - 118 mil (10 ga) with ⅜" plate,
S/HD15 - 171 mil (7 ga) with ½" plate.

FINISH: Simpson gray paint. Hot-dip galvanized is available; see Corrosion-Resistant Connectors, page 11.

INSTALLATION:
- Use all specified fasteners. See General Notes.
- See SSTB Anchor Bolts. The design engineer may specify any alternate anchorage calculated to resist the tension load for your specific job.
- Anchor bolt washer is not required.

CODE: See page 7 for Code Listing Key Chart.

Available with additional corrosion protection. Check with factory.

Model No.	Dimensions W	H	CL	Fasteners Anchor Dia.	Screws	Allowable Tension Loads (133) 2-33 mil (2-20 ga)	43 mil (18 ga)	54 mil (16 ga)	Holdown[4] Deflection at Highest Allowable Design Load	Code Ref.
S/HD8	2½	13⅞	1½	⅞	24-#10	7615[1]	8460[1]	8940[2]	0.085	28, 104
S/HD10	2½	16⅛	1½	⅞	30-#10	9520[1]	9665[2]	9665[2]	0.093	
S/HD15	2¾	21½	1½	1	48-#10	–	12200[1]	14405[2]	0.070	28

1. For load at (100), multiply table value by 0.75 where the 1/3 increase is not permitted. Reference page 10.
2. Values are test limited. For load at (100), no reduction necessary. For load at (133) for 1/3 increase, no further increase allowed.
3. The Designer shall specify the anchor embedment and configuration. See SSTB Anchor Bolts and Additional Anchor Design.
4. Deflection at Highest Allowable Design Load: The deflection of a holdown measured between the anchor bolt and the strap portion of the holdown when loaded to the highest allowable load listed in the catalog table. This movement is strictly due to the holdown deformation under a static load test conducted on a steel jig.

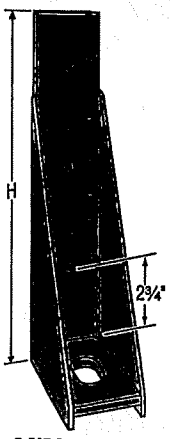

S/HD8

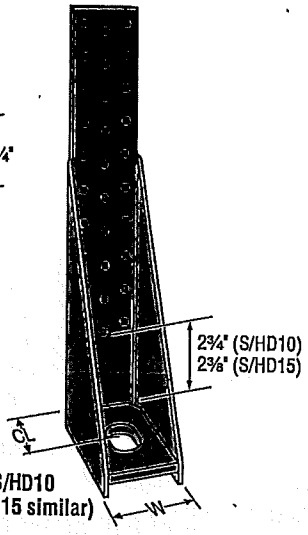

S/HD10
(S/HD15 similar)

S/LTT & S/HTT *Tension Ties*

The S/HTT14 is a single-piece formed tension tie—no rivets, and a 4-ply formed seat which won't unfold during loading. No washers are required.

The S/LTT and S/HTT Tension Ties are ideal for retrofit or new construction projects. They provide high strength, post-pour, concrete-to-steel connections.

MATERIAL: See table.

FINISH: Galvanized.

INSTALLATION:
- Use all specified fasteners.
- Use the specified number and type of screws to attach the strap portion to the steel stud. Bolt the base to the wall or foundation with a suitable anchor; see table for the required bolt diameter.

CODE: See page 7 for Code Listing Key Chart.

Model No.	Material mil (ga) Strap	Plate	Dimensions W	H	CL	Fasteners Anchor Bolts	Screws	Allowable Tension Loads (100 & 133)	Holdown[4] Deflection at Highest Allowable Design Load	Code Ref.
S/LTT20	97 (12 ga)	229 (3 ga)	2	20	1½	½	5-#10	1600	0.209	28, 104
S/HTT14	111 (11 ga)	–	2½	15	1¼	⅝	14-#10	4385	0.041	

1. The Designer shall specify the anchor embedment and configuration. See SSTB Anchor Bolts.
2. Load at (100), no reduction necessary. Load at (133) for 1/3 increase, no further increase allowed.
3. Loads are based on attachment of CFS members having a minimum thickness of 33 mil (20 ga).
4. See S/HD notes regarding deflection at highest allowable design load.

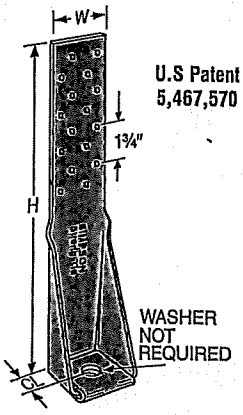

S/HTT14

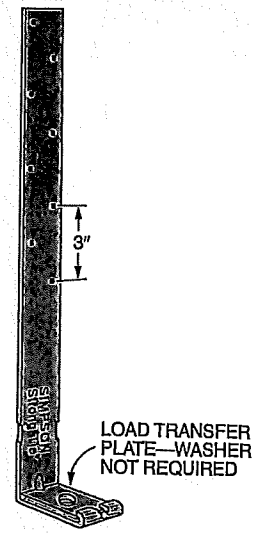

S/LTT20

Typical S/HTT14
Installation as a Holdown

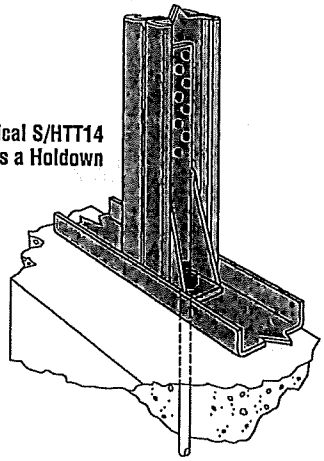

APPROVED: STATE OF CA - CERTIFIED DAA
Based on the requirements of title 25 California code of regulations
Chapter 3 subchapter 2 Commercial Modular
Date: 04-25-2023 Expires: 07-31-2024
Approval # PFS: 23-002714
THIS APPROVAL DOES NOT AUTHORIZE OR APPROVE ANY OMISSION OR DEVIATION FROM THE REQUIREMENTS OF STATE LAWS OR APPLICABLE LOCAL ORDINANCES . THIS APPROVAL IS LIMITED TO FACTORY-BUILT PORTION ONLY.
PFS CORPORATION - Cottage Grove, WI

H2A ENGINEERING, INC.

CLIENT VFP

PROJECT

DIAPHRAGM CHORD STRENGTH

DATE 12/11/09

JOB NO. 1140

BY BKY

PAGE 10.1

REV. 3/9/12

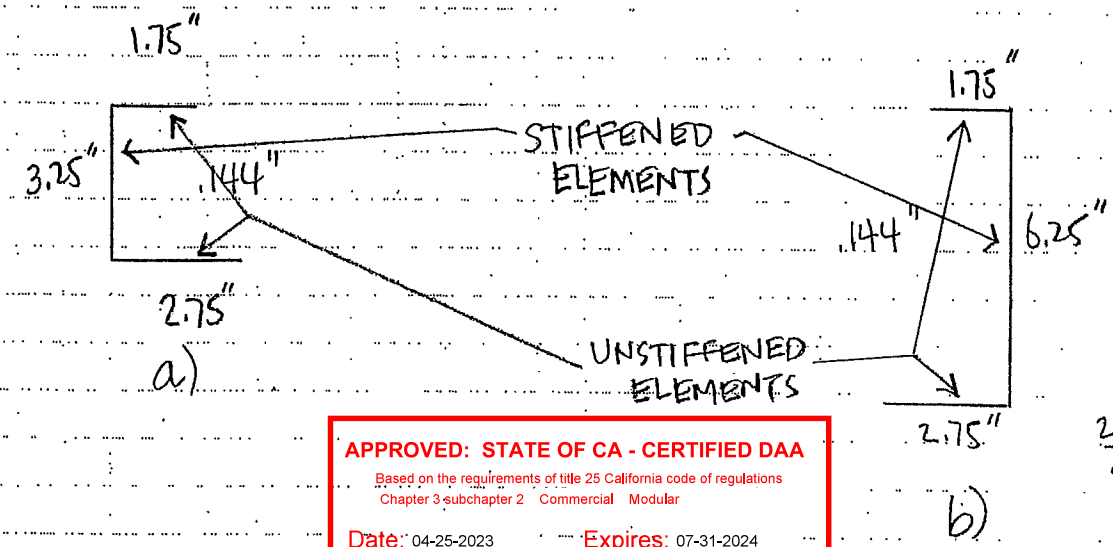

$\frac{6.25}{.144} = 43.4 < 500$ ✓

$\frac{2.75}{.144} = 19 < 60$ ✓

APPROVED: STATE OF CA - CERTIFIED DAA

Based on the requirements of title 25 California code of regulations Chapter 3 subchapter 2 Commercial Modular

Date: 04-25-2023 Expires: 07-31-2024

Approval # PFS: 23-002714

THIS APPROVAL DOES NOT AUTHORIZE OR APPROVE ANY OMISSION OR DEVIATION FROM THE REQUIREMENTS OF STATE LAWS OR APPLICABLE LOCAL ORDINANCES . THIS APPROVAL IS LIMITED TO FACTORY-BUILT PORTION ONLY.

PFS CORPORATION - Cottage Grove, WI

SECTION b)

B2.1 UNIFORMLY COMPRESSED STIFFENED ELEMENTS (WEB)

2 STIFFENED EDGES

$$F_{cr} = k \frac{\pi^2 E}{12(1-\mu)^2}\left(\frac{t}{w}\right)^2 = 4 \frac{\pi^2(29000\text{ ksi})}{12(1-.3)^2}\left(\frac{.144}{6.25}\right)^2 = 103\text{ ksi}$$

.00053

$$F_e = \frac{\pi^2 E}{(KL/r)^2}$$

NOT SUBJECT TO TORSIONAL OR TORS.-FLEX. BUCKLING

$$= \frac{\pi^2(29000\text{ ksi})}{(4.94)^2} = 11717\text{ ksi} \qquad \frac{KL}{r} = \frac{(1.0)(12'')}{2.43''} = 4.94$$

$$\lambda_c = \sqrt{\frac{F_y}{F_e}} = \sqrt{\frac{33\text{ ksi}}{11717}} = .053 \rightarrow F_n = \left(.658^{\lambda_c^2}\right)F_y$$

$$= .998\,F_y = 33\text{ ksi} \leftarrow f$$

$$\lambda = \sqrt{\frac{f}{F_{cr}}} = \sqrt{\frac{33\text{ ksi}}{103\text{ ksi}}} = .566 < .673 \rightarrow b = w$$

ENTIRE WEB IS EFFECTIVE

D2A ENGINEERING, INC.

CLIENT VFP
PROJECT

DIAPHRAGM CHORD STRENGTH

DATE 12/11/09
JOB NO. 1140
BY BKT
PAGE 10.2

REV. 3/9/12

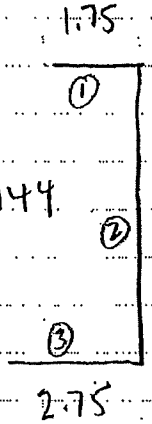

PC	AREA in.²	y	Ay	I_o	Ad^2
1	.252	6.25	1.575	.0004	2.91
2	.900	3.125	2.81	2.929	.07
3	.396	.07	.028	.0007	3.22
	1.548 in.²		4.413		9.13

$\bar{y} = \frac{4.413}{1.548} = 2.85"$ FROM BOTTOM

$I = 9.13\ in.^4$

$r = \sqrt{\frac{I}{A}} = \sqrt{\frac{9.13\ in^4}{1.548\ in.^2}} = 2.43"$

APPROVED: STATE OF CA - CERTIFIED DAA
Based on the requirements of title 25 California code of regulations
Chapter 3 subchapter 2 Commercial Modular
Date: 04-25-2023 Expires: 07-31-2024
Approval # PFS: 23-002714
THIS APPROVAL DOES NOT AUTHORIZE OR APPROVE ANY OMISSION OR DEVIATION FROM THE REQUIREMENTS OF STATE LAWS OR APPLICABLE LOCAL ORDINANCES . THIS APPROVAL IS LIMITED TO FACTORY-BUILT PORTION ONLY.
PFS CORPORATION - Cottage Grove, WI

A2A ENGINEERING, INC.

CLIENT VFP
PROJECT

DIAPHRAGM CHORD STRENGTH

DATE 12/11/09
JOB NO 1140
BY BKY
PAGE 10.3

REV. 3/9/12

B3.1 UNIFORMLY COMPRESSED UNSTIFFENED ELEMENT (FLANGES)

$$F_{cr} = k\frac{\pi^2 E}{12(1-\mu)^2}\left(\frac{t}{w}\right)^2$$

$$= .43\frac{\pi^2(29000)}{12(1-\mu)^2}\left(\frac{.144}{2.75}\right)^2 = 57.3\ ksi \qquad (.0027)$$

$$F_e = 11717\ ksi \rightarrow \lambda_c = \sqrt{\frac{F_y}{F_e}} = .053 \rightarrow F_n = 33\ ksi$$

$$\lambda = \sqrt{\frac{f}{F_{cr}}} = \sqrt{\frac{33}{57.3}} = .76 > .673 \rightarrow b = \rho w$$

$$\rho = \frac{\left(1-\frac{.22}{\lambda}\right)}{\lambda} = \frac{\left(1-\frac{.22}{.76}\right)}{.76} = .93$$

$$\rho w = .93 \times 2.75" = 2.55"$$

SAY 2.5" EFFECTIVE.

EFFECTIVE SECTION (SHALLOW TRACK GOVERNS) (STRONG AXIS)

.144" WT, 3.25, 1.75

PC	AREA	y	Ay	I_o	Ad^2
1	.252	3.25	.819	.0004	.781
2	.468	1.625	.761	.412	.009
3	.360	.07	.025	.0006	.726
	1.08		1.61	1.929	

$$\bar{y} = \frac{1.61}{1.08} = 1.49"$$

$$I = 1.929\ in.^4 \qquad r = \sqrt{\frac{1.929}{1.08}} = 1.33"$$

APPROVED: STATE OF CA - CERTIFIED DAA
Based on the requirements of title 25 California code of regulations
Chapter 3 subchapter 2 Commercial Modular
Date: 04-25-2023 Expires: 07-31-2024
Approval # PFS: 23-002714
THIS APPROVAL DOES NOT AUTHORIZE OR APPROVE ANY OMISSION OR DEVIATION FROM THE REQUIREMENTS OF STATE LAWS OR APPLICABLE LOCAL ORDINANCES. THIS APPROVAL IS LIMITED TO FACTORY-BUILT PORTION ONLY.
PFS CORPORATION - Cottage Grove, WI

d2A ENGINEERING, INC.	CLIENT VFP PROJECT	DATE 12/11/09 JOB NO 1140 BY BKY PAGE 10.4

DIAPHRAGM CHORD STRENGTH

REV. 3/9/12

EFFECTIVE SECTION (SHALLOW TRACK) WEAK AXIS

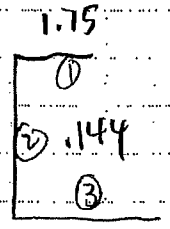

	PE	AREA	x̄	Ax̄	I_o	Ad^2
	1	.252	.875	.22	.06	.013
	2	.468	.07	.033	.0008	.157
	3	.360	1.25	.45	.188	.129
		1.08		.703	.548	

$$\bar{x} = \frac{.703}{1.08} = .65''$$

$$I = .548 \text{ in.}^4$$

$$r = \sqrt{\frac{.548}{1.08}} = .712 \qquad \frac{KL}{r} = \frac{12''}{.712} = 16.85$$

$$F_y = 33 \text{ KSI}$$

$$F_e = \frac{\pi^2 E}{\left(\frac{KL}{r}\right)^2} = \frac{\pi^2 (29000)}{(16.85)^2} = 1007$$

$$\lambda_c = \sqrt{\frac{F_y}{F_e}} = \sqrt{\frac{33}{1007}} = .18 \longrightarrow F_n = .658^{.18^2} F_y = .98 F_y$$

APPROVED: STATE OF CA - CERTIFIED DAA
Based on the requirements of title 25 California code of regulations
Chapter 3 subchapter 2 Commercial Modular
Date: 04-25-2023 Expires: 07-31-2024
Approval # PFS: 23-002714
THIS APPROVAL DOES NOT AUTHORIZE OR APPROVE ANY OMISSION OR DEVIATION FROM THE REQUIREMENTS OF STATE LAWS OR APPLICABLE LOCAL ORDINANCES . THIS APPROVAL IS LIMITED TO FACTORY-BUILT PORTION ONLY.
PFS CORPORATION - Cottage Grove, WI

D2A ENGINEERING, INC.

CLIENT VFP
PROJECT

DIAPHRAGM CHORD STRENGTH

DATE 12/11/09
JOB NO 1140
BY BKY
PAGE 10.5

REV. 3/9/12

C4 CONCENTRICALLY LOADED COMPRESSION MEMBERS

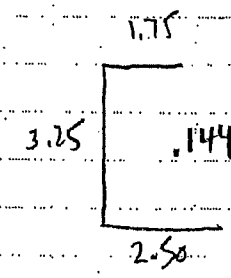

$F_y = 33$ ksi

$F_e = 11717$ ksi

$\lambda_c = \sqrt{\frac{F_y}{F_e}} = \sqrt{\frac{33\ ksi}{11717\ ksi}} = .053 < 1.5 \rightarrow F_n = \left(.658^{\lambda_c^2}\right) F_y$

$= .658^{.0028} F_y$

$= .99 F_y$ (YIELD, BASICALLY)

$P_n = A_e P_n = (1.08\ in^2)(33\ ksi) = 35.6^K$

$\frac{P_n}{\Omega_c} = \frac{35.6}{1.8} = \underline{19.8\ K}$ TESTS FAILED CHORDS AT ABOUT 4.4^K LOCAL CRUSHING BY TEST FIXTURE?

OBVIOUSLY, ASSUMPTION THAT TORSION-FLEXURAL BUCKLING DOES NOT OCCUR IS INVALID.

APPROVED: STATE OF CA - CERTIFIED DAA
Based on the requirements of title 25 California code of regulations
Chapter 3 subchapter 2 Commercial Modular
Date: 04-25-2023 Expires: 07-31-2024
Approval # PFS: 23-002714
THIS APPROVAL DOES NOT AUTHORIZE OR APPROVE ANY OMISSION OR DEVIATION FROM THE REQUIREMENTS OF STATE LAWS OR APPLICABLE LOCAL ORDINANCES . THIS APPROVAL IS LIMITED TO FACTORY-BUILT PORTION ONLY.
PFS CORPORATION - Cottage Grove, WI

H2A ENGINEERING, INC.

CLIENT VFP
PROJECT

DATE 12/11/09
JOB NO 1140
BY BKY
PAGE 10.6

CONSIDER TORSIONAL FLEXURAL BUCKLING

REV. 3/9/12

$$F_e = \frac{\sigma_t \sigma_{ex}}{\sigma_t + \sigma_{ex}}$$

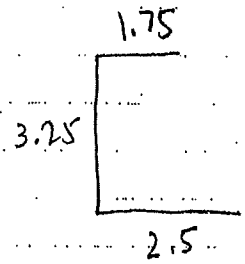

$$\sigma_t = \frac{1}{A r_o^2}\left[GJ + \frac{\pi^2 E C_w}{(K_t L_t)^2}\right]$$

$$\sigma_{ex} = \frac{\pi^2 E}{\left(\frac{K_x L_x}{r_x}\right)^2} = 1007$$

APPROVED: STATE OF CA - CERTIFIED DAA
Based on the requirements of title 25 California code of regulations
Chapter 3 subchapter 2 Commercial Modular
Date: 04-25-2023 Expires: 07-31-2024
Approval # PFS: 23-002714
THIS APPROVAL DOES NOT AUTHORIZE OR APPROVE ANY OMISSION OR DEVIATION FROM THE REQUIREMENTS OF STATE LAWS OR APPLICABLE LOCAL ORDINANCES . THIS APPROVAL IS LIMITED TO FACTORY-BUILT PORTION ONLY.
PFS CORPORATION - Cottage Grove, WI

J = SAINT VENANT TORSION CONSTANT

C_w = TORSIONAL WARPING CONSTANT (DISCOUNT)

$$J = \frac{(1.75)(.144)^3 + (2.5)(.144)^3 + (3.25)(.144)^3}{3} = .0075$$

$A = 1.08\ in^2$

$$r_o = \sqrt{r_x^2 + r_y^2} = \sqrt{1.33^2 + .712^2} = 1.5''$$

G = SHEAR MODULUS $= \frac{E}{2(1+\mu)} = \frac{29000}{2(1+.3)} = 11154$

$$\sigma_t = \frac{1}{(1.08\ in^2)(1.5'')^2}\left[11154\ ksi \cdot .0075\ in^4\right] = 34.4\ ksi$$

$$F_e = \frac{\sigma_t \sigma_{ex}}{\sigma_t + \sigma_{ex}} = \frac{(34.4)(1007)}{34.4 + 1007} = 33.3\ ksi$$

A2A ENGINEERING, INC.

CLIENT VFP
PROJECT

DIAPHRAGM CHORD STRENGTH

DATE 12/11/09
JOB NO. 1140
BY BKY
PAGE 10.7

REV. 3/9/12

$$\lambda_c = \sqrt{\frac{F_y}{F_e}} = \sqrt{\frac{33}{33.3}} = .995$$

$$F_n = \left(.658^{\lambda_c^2}\right) F_y = .658^{.995^2} = .66\,F_y$$

$$P_n = \left(\frac{1.08\ in^2}{A_e}\right)\left(\underbrace{.66 \times 33 ksi}_{F_n}\right) = 23.5^{k}$$

$$\frac{P_n}{\Omega_c} = \frac{23.5^{k}}{1.8} = 13.1^{k}$$ STILL TOO HIGH, DOESN'T AGREE W/ TESTS.

CONCLUDE TESTS MAY HAVE FAILED CHORDS PREMATURELY BECAUSE OF LOCAL LOADING OF FIXTURE

MAX. DIAPHRAGM CHORD FORCE DEMAND = 1790# OK

TEST FAILURE FORCE = 4.4^k

ALLOWABLE CHORD FORCE (BY TEST) = $\frac{4.4^{k}}{2.5} = 1.76^{k}$ SAY OK

APPROVED: STATE OF CA - CERTIFIED DAA
Based on the requirements of title 25 California code of regulations
Chapter 3 subchapter 2 Commercial Modular
Date: 04-25-2023 Expires: 07-31-2024
Approval # PFS: 23-002714
THIS APPROVAL DOES NOT AUTHORIZE OR APPROVE ANY OMISSION OR DEVIATION FROM THE REQUIREMENTS OF STATE LAWS OR APPLICABLE LOCAL ORDINANCES . THIS APPROVAL IS LIMITED TO FACTORY-BUILT PORTION ONLY.
PFS CORPORATION - Cottage Grove, WI

KH2A ENGINEERING, INC.

CLIENT VFP
PROJECT
ANCHORAGE

DATE 9/28/15
JOB NO. 1140
BY BCy
PAGE 11.1

ANCHORAGE

TAKE $\frac{1}{2}$"ϕ MECHANICAL EXPANSION BOLTS WITH $2\frac{1}{4}$" EMBED, IN 3000 f'_c CONCRETE FOUNDATIONS.

HILTI KWIK BOLT 3 EXPANSION ANCHORS, OR EQUAL.

V= 2300# ALLOWABLE, HILTI TABLE 2.

WORST TOTAL TRANSVERSE WIND SHEAR = 7397# SPREADSHEET

146" TALL
44'LONG x 12'W

4 - $\frac{1}{2}$"ϕ x $2\frac{1}{4}$" EMBED. HILTI KWIK BOLT 3, OR EQUAL O/C BY INSPECTION, EQUALLY SPACED AT LIFT POINTS O/C

SEE NEXT PAGE FOR CALC WHICH SHOWS ANCHORAGE NOT REQUIRED FOR BUILDING OVERTURNING STABILITY

APPROVED: STATE OF CA - CERTIFIED DAA
Based on the requirements of title 25 California code of regulations
Chapter 3 subchapter 2 Commercial Modular
Date: 04-25-2023 Expires: 07-31-2024
Approval # PFS: 23-002714
THIS APPROVAL DOES NOT AUTHORIZE OR APPROVE ANY OMISSION OR DEVIATION FROM THE REQUIREMENTS OF STATE LAWS OR APPLICABLE LOCAL ORDINANCES. THIS APPROVAL IS LIMITED TO FACTORY-BUILT PORTION ONLY.
PFS CORPORATION - Cottage Grove, WI

KH2A ENGINEERING, INC.

CLIENT VFP
PROJECT
44' BUILDING - OVERTURN STABILITY

DATE 9/28/15
JOB NO. 1140
BY BKG
PAGE 11.2

E+F+G+H

$[(-32.2^{E}\ PSF \times 6' \times 6') + (-18.3^{F}\ PSF \times 6' \times 6') + (-22.4^{G} \times 38 \times 6) + (-14.2^{H} \times 38 \times 6)] \times 1.21^{LC} = [1159 + 659 + 5107 + 3238]1.21$

$= 12{,}297^{\#}$ UPLIFT, ULT. 130 MPH

LC: 0.6D + 0.6W

44' BUILDING WEIGHT = 26.6^{K} (LIGHT WEIGHT FLOOR ASS'Y)

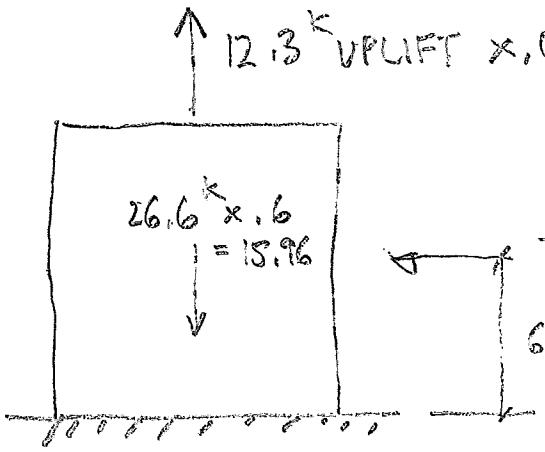

$M_{OVT} = 4438^{\#} \times 6.08' = 27^{K-I}$

$M_{RESIST} = (15.96 - 7.4^{K})(\frac{12'}{2}) = 51.4^{K-I} > 27^{K-I}$ STABLE W/O ANCHORS

ANCHORAGE NOT REQ'D FOR OVERTURNING RESISTANCE

APPROVED: STATE OF CA - CERTIFIED DAA
Based on the requirements of title 25 California code of regulations
Chapter 3 subchapter 2 Commercial Modular
Date: 04-25-2023 Expires: 07-31-2024
Approval # PFS: 23-002714
THIS APPROVAL DOES NOT AUTHORIZE OR APPROVE ANY OMISSION OR DEVIATION FROM THE REQUIREMENTS OF STATE LAWS OR APPLICABLE LOCAL ORDINANCES . THIS APPROVAL IS LIMITED TO FACTORY-BUILT PORTION ONLY.
PFS CORPORATION - Cottage Grove, WI

Kwik Bolt 3 Expansion Anchor 4.3.5 11.2

Table 2 - Carbon Steel Kwik Bolt 3 Allowable Loads in Normal-Weight Concrete[1]

Anchor Diameter in. (mm)	Embedment Depth in. (mm)	f'_c = 2000 psi (13.8 MPa)		f'_c = 3000 psi (20.7 MPa)		f'_c = 4000 psi (27.6 MPa)		f'_c = 6000 psi (41.4 MPa)	
		Tension lb (kN)	Shear[2] lb (kN)	Tension lb (kN)	Shear[2] lb (kN)	Tension lb (kN)	Shear[2] lb (kN)	Tension lb (kN)	Shear[2] lb (kN)
1/4 (6.4)	1-1/8 (29)	300 (1.3)	530 (2.4)	365 (1.6)	530 (2.4)	430 (1.9)	530 (2.4)	550 (2.4)	530 (2.4)
	2 (51)	635 (2.8)		715 (3.2)		800 (3.6)		845 (3.8)	
	3 (76)	755 (3.4)		795 (3.5)		840 (3.7)			
3/8 (9.5)	1-5/8 (41)	730 (3.2)	1135 (5.0)	910 (4.0)	1275 (5.7)	1095 (4.9)	1420 (6.3)	1090 (4.8)	1480[3] (6.5)
	2-1/2 (64)	1260 (5.6)	1460[3] (6.5)	1555 (6.9)	1460[3] (6.5)	1850 (8.2)	1460[3] (6.5)	2060 (9.2)	
	3-1/2 (89)	1580 (7.0)		1770 (7.9)		1965 (8.7)		2150 (9.6)	
1/2 (12.7)	2-1/4 (57)	1235 (5.5)	1865 (8.3)	1430 (6.4)	2300 (10.2)	1620 (7.2)	2735[4] (12.2)	1975 (8.8)	3020[5] (13.4)
	3-1/2 (89)	1930 (8.6)	3020[4] (13.4)	2185 (9.7)	3020[4] (13.4)	2440 (10.9)	3020[5] (13.4)	3240 (14.4)	
	4-3/4 (121)	2135 (9.5)		2355 (10.5)		2575 (11.5)		3620 (16.1)	
5/8 (15.9)	2-3/4 (70)	1920 (8.5)	2750 (12.2)	2065 (9.2)	3410 (15.2)	2210 (9.8)	4070[6] (18.1)	2830 (12.6)	4885[5] (21.7)
	4 (102)	2660 (11.8)	4885[5] (21.7)	3020 (13.4)	4885[5] (21.7)	3385 (15.1)	4885[5] (21.7)	4770 (21.2)	
	5-1/2 (140)	3285 (14.6)		3695 (16.4)		4100 (18.2)		5325 (23.7)	
3/4 (19.1)	3-1/4 (83)	2120 (9.4)	4090 (18.2)	2425 (10.8)	4900 (21.8)	2730 (12.1)	5710[6] (25.4)	3785 (16.8)	5710[6] (25.4)
	4-3/4 (121)	3240 (14.4)	5340 (23.8)	4260 (18.9)	5340 (23.8)	5285 (23.5)	7325[7] (32.6)	6155 (27.4)	7325[7] (32.6)
	6-1/2 (165)	4535 (20.2)		5860 (26.1)		7185 (32)		7005 (31.2)	
1 (25.4)	4-1/2 (114)	3330 (14.8)	7070 (31.4)	4050 (18.0)	7600 (33.8)	4670 (20.8)	8140 (36.2)	5070 (22.6)	9200 (40.9)
	6 (152)	4930 (21.9)	9200 (40.9)	6000 (26.7)	9200 (40.9)	7070 (31.4)	9200 (40.9)	8400 (37.4)	
	9 (229)	6670 (29.7)		7670 (34.1)		8670 (38.6)		10670 (47.5)	

1 Intermediate load values for other concrete strengths and embedments can be calculated by linear interpolation.

2 Unless otherwise noted, values shown are valid for the shear plane acting through either the anchor body or the anchor threads.

3 Values shown are for a shear plane through the anchor body. When the shear plane is acting through the threads, reduce the shear value by 10%.

4 Values shown are for a shear plane through the anchor body. When the shear plane is acting through the threads, reduce the shear value by 12%.

5 Values shown are for a shear plane through the anchor body. When the shear plane is acting through the threads, reduce the shear value by 20%.

6 Values shown are for a shear plane through the anchor body. When the shear plane is acting through the threads, reduce the shear value by 7%.

7 Values shown are for a shear plane through the anchor body. When the shear plane is acting through the threads, reduce the shear value by 27%.

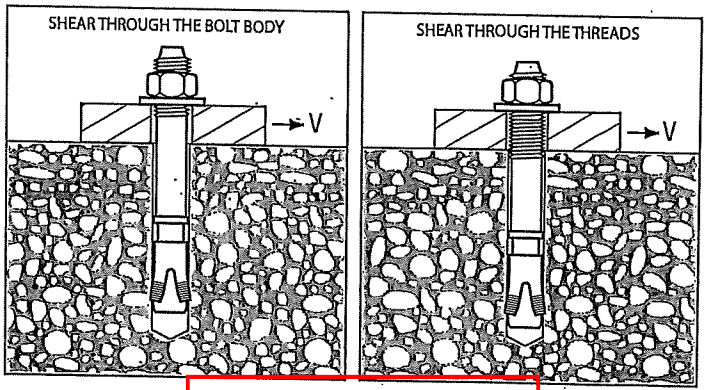

APPROVED: STATE OF CA - CERTIFIED DAA
Based on the requirements of title 25 California code of regulations
Chapter 3 subchapter 2 Commercial Modular
Date: 04-25-2023 Expires: 07-31-2024
Approval # PFS: 23-002714
THIS APPROVAL DOES NOT AUTHORIZE OR APPROVE ANY OMISSION OR DEVIATION FROM THE REQUIREMENTS OF STATE LAWS OR APPLICABLE LOCAL ORDINANCES. THIS APPROVAL IS LIMITED TO FACTORY-BUILT PORTION ONLY.
PFS CORPORATION - Cottage Grove, WI

Hilti, Inc. (US) | 1-800-879-8000 | www.us.hilti.com | en.general.1-800-879-5000 VA 2140 Headquarters: Hilti, Inc. Corporate Office: 5410 Trailwater Lane, Roanoke, VA 24018 Manufacturing

VFP, INCORPORATED SHELTER MODEL 7070 12'0" x 16'0" x 9'1" LIGHTWEIGHT SHELTER CITY OF ROSEVILLE, CA (STRAUCH DRIVE)

Scope of Work for California Commercial Modular Equipment Enclosure, VFP Model #7070

The technical design fabrication of this equipment enclosure is split into the following two general areas of scope for the purpose of technical review, approval and inspection:

1. General Equipment Enclosure
   - Equipment Enclosure (Concrete construction)
   - Equipment Shelter Electrical System to include the following:
     - Utility disconnect switch
     - Automatic Transfer Switch
     - Utility Power Panels
     - Equipment Enclosure fans, motors, filters, louvers and rain hood, etc.
     - Lighting Systems, etc.
     - Receptacles, etc.
     - Ground bus bar
     - Grounding and bonding of all general electrical equipment
     - Electrical wiring and conduits from utility disconnect switch to the utility power panel, etc.
     - Electrical wiring and conduits from utility power panel to all power-fed devices in the equipment shelter.
   - All installed equipment supporting the electrical, mechanical and HVAC services shall be listed on the data plate.
2. Other Equipment for Equipment Shelter
   - Equipment supplied by customer is not included on this drawing set. This equipment shall not be listed on the data plate and will not be reviewed by PFS, Inc. or inspected.

JOB SITE LOCATION

SITE NAME:
STRAUCH DRIVE
SITE ADDRESS:
2001 STRAUCH DRIVE
ROSEVILLE, CA 95661

THIS APPROVAL ONLY APPLIES TO THE CONSTRUCTION OF THE EQUIPMENT SHELTER AND ITS' SUPPORTING ELECTRICAL, MECHANICAL, AND HVAC SERVICES. ALL OTHER MECHANICAL AND/OR ELECTRICAL PROVIDED FOR OTHER USE IS NOT PART OF PFS CORPORATION'S APPROVAL.

APPROVED: STATE OF CA - CERTIFIED DAA
Based on the requirements of title 25 California code of regulations
Chapter 3 subchapter 2 Commercial Modular
Date: 04-25-2023 | Expires: 07-31-2024
Approval # PFS: 23-002714
THIS APPROVAL DOES NOT AUTHORIZE OR APPROVE ANY OMISSION OR DEVIATION FROM THE REQUIREMENTS OF STATE LAWS OR APPLICABLE LOCAL ORDINANCES . THIS APPROVAL IS LIMITED TO FACTORY-BUILT PORTION ONLY.
PFS CORPORATION - Cottage Grove, WI

REVISIONS

CHG. BY	APPR. BY	DATE	REV

REGISTERED PROFESSIONAL ENGINEER ALEXANDER TAKAHASHI E-8508 EXP. 09-30-2024 ELECTRICAL STATE OF CALIFORNIA

04-20-2023

Alexander Takahashi, P.E.
I certify that these documents were prepared or approved by me, and I am a duly licensed professional engineer under the laws of the State of California.
License No: E8508
Expiration Date: 09/30/24

Site Name(s):
STRAUCH DRIVE
P.O.'s #: 9013484/
AGREEMENT 3002606
VFP Job #: 220742/DWG
Dash #: -001

CALIFORNIA STATE CODES

2022 Part 1 CA Administrative Code
2022 Part 2 CA Building Code (based on 2021 IBC)
2022 Part 3 CA Electrical Code (based on 2020 NEC)
2022 Part 4 CA Mechanical Code (based on 2021 UMC)
2022 Part 5 CA Plumbing Code (based on 2021 UPC)
2022 Part 6 CA Energy Code
2022 Part 9 CA Fire Code (based on 2021 IFC)
2022 Part 11 CA Green Building Standards Code (CALgreen)
2022 Part 12 CA Referenced Standards Code

NATURAL GAS IS NOT AVAILABLE AT THIS SHELTER SITE.

OVERALL AREA OF THIS BUILDING = 192 SQ FT.
OVERALL HEIGHT OF THIS BUILDING = 126 IN.
THIS BUILDING IS NOT SPRINKLED.
ALL GLAZING TO MEET ANSI 97.1 WITH CPSC 16 CFR PART 1201 REQUIREMENTS.

Code Classification	Occy	Constr
IBC– INTERNATIONAL BUILDING CODE	S–2	V–B
OCCUPANCY LOAD (300SQFT=1)	1	

Site Specific & Customer Driven Loads	
uniform floor load	125 psf
uniform roof live load	100 psf
wind load	104 mph
seismic	CAT "D" SDS=.424
ground snow	0
risk category	IV

**VFP, INC ENGINEERING HAS ESTIMATED THE BUILDING WEIGHT, USING OUR IN–HOUSE BUILDING WEIGHT PROGRAM. SHOULD YOU DESIRE MORE ACCURATE DATA, VFP CAN, IF REQUESTED, SCHEDULE THIS BUILDING TO BE WEIGHED USING A CERTIFIED SCALE LOCATED AT OUR DUFFIELD, VIRGINIA MANUFACTURING FACILITY. IF YOU ELECT TO GO THIS ROUTE THE ACTUAL WEIGHT WILL BE PROVIDED AFTER THE BUILDING IS COMPLETED AND READY FOR SHIPMENT.
IF YOU REQUIRE FURTHER INFORMATION REGARDING FREIGHT AND CRANE SERVICES, PLEASE FEEL FREE TO CONTACT OUR TRANSPORTATION MANAGER (GREG GARMAN) AT 540–444–5714 OR VIA EMAIL AT GGARMAN@VFPINC.COM.

Field Notes:

a. Allowable stresses calculated using the recommended foundation while anchored with VFP–designated hardware.

b. Uniform floor loading while being lifted is 125 psf.

c. Locate wedge anchor after building is located on foundation to correctly align with installed anchor plate. Refer to detail B, sheet 26.

2021 IBC CODE SECTION 1603 DESIGN LOADS

THIS SHELTER IS MODULAR AND HAS BEEN DESIGNED FOR THE FOLLOWING DESIGN LOADS, WHICH MAY EXCEED THOSE IN EFFECT AT THE ACTUAL SITE.

1.1 FLOOR LIVE LOAD = 125 PSF
1.2 ROOF LIVE LOAD = 100 PSF
1.3 ROOF SNOW LOAD
(1) FLAT–ROOF SNOW LOAD = 100 PSF
(2) SNOW EXPOSURE FACTOR = 1.0
(3) SNOW LOAD IMPORTANCE FACTOR = 1.0
(4) THERMAL FACTOR = 1.0
(5) SLOPE FACTOR(S) = 1.0
(6) DRIFT SURCHARGE LOADS 0
(7) WIDTH OF SNOW DRIFT(S) 0
1.4 WIND LOAD:
(1) BASIC WIND SPEED Vult = 130 MPH (3 SECOND GUST)
Vasd = 103 MPH
(2)
(3) WIND EXPOSURE = 'C'
(4) INTERNAL PRESSURE COEFFICIENT = N/A
(5)
1.5 EARTHQUAKE DESIGN DATA FOR CONCRETE SHELTERS
(1) RISK CATEGORY II
(2) SEISMIC IMPORTANCE FACTOR = 1.0
(3) MAPPED SPECTRAL RESPONSE ACCELERATION PARAMETERS, SS = 1.85 AND S1 = 0.5
(4) SITE CLASS = 'D'
(5) DESIGN SPECTRAL RESPONSE ACCELERATION PARAMETERS SDS = 1.24 AND SD1 = 0.5
(6) SEISMIC DESIGN CATEGORY = D
(7) BASIC SEISMIC–FORCE RESISTING SYSTEM = LIGHT FRAMED FRAMED WALLS
(8)
(9) SEISMIC RESPONSE COEFFICIENT, CS = .19 FOR Ie=1.0
(10) RESPONSE MODIFICATION COEFFICIENT, R. = 6.5
(11) ANALYSIS PROCEDURE = EQUIVALENT LATERAL FORCE PROCEDURE
1.9 ROOF RAIN LOAD DATA
(1) RAIN INTENSITY = NA
PRIMARY DRAINAGE IS SHEET FLOW OVER EAVES, NOT SUBJECT TO BLOCKAGE – ROOF IS NOT SUSCEPTIBLE TO PONDING.

MATERIAL SPECIFICATIONS

STEEL PLATE	ASTM A36
INSULATION – SPRAY FOAM POLYSTYRENE	"R" VALUE 7 PER INCH
SHEATHING – 3/8" OSB	
INTERIOR – 3/32" FRP	FRP (LAMINATE)
WALL PANS – 18GA GALVALUME	PAINTED (TAN)
ROOF – 14GA GALVALUME	
STANDING SEAM – 22GA GALVALUME	COATING (TAN) SOLAR REFLECTANCE = 0.47 THERMAL EMITTANCE = 0.85
ALL POWER WIRING SHALL BE THHN 90° RATED MIN.	

NOTES

1. REFER TO SHEET 2 FOR GENERAL NOTES.
2. REFER TO SHEET 3 FOR FASTENING SCHEDULE & LEGEND.
3. FABRICATE TO THE MIRROR IMAGE OF THIS DRAWING WHERE REQUIRED BY ECN, SALES ORDER, OR NEW DRAWING RELEASE.
4. REFER TO SHEET NOTES ON SPECIFIC PAGES FOR ADDITIONAL INSTRUCTIONS.
5. REFER TO DRAWING # 277029 FOR SPECIFIC SETUP INSTRUCTIONS.
6. LOCATE THE SHELTER DATA PLATE AND THE STATE DECAL ON THE WALL NEXT TO THE DOOR. (SEE SHEET# 10)
7. THIS SHELTER MEETS ALL REQUIREMENTS FOR CLIMATE ZONE 11.
8. THIS APPROVAL ONLY APPLIES TO THE CONSTRUCTION OF THE EQUIPMENT SHELTER AND ITS SUPPORTING ELECTRICAL, MECHANICAL, AND HVAC SERVICES. ALL OTHER MECHANICAL AND/OR ELECTRICAL PROVIDED FOR OTHER USE IS NOT PART OF PFS'S APPROVAL.
9. LIGHTING INSTALLED ON–SITE SHALL BE APPROVED BY LOCAL AHJ.

INDEX OF DRAWINGS

DRAWING		DESCRIPTION
207070	SHEET 1	TITLE SHEET
207070	SHEET 2	GENERAL NOTES & WIRING PROCEDURES
207070	SHEET 3	FASTENING SCHEDULE & LEGEND
207070	SHEET 4	BILL OF MATERIALS
207070	SHEET 5	AC PANEL SCHEDULE
207070	SHEET 6	ALARM & HVAC CONTROLLER WIRING DETAILS
207070	SHEET 7	ATS WIRING DETAILS
207070	SHEET 8	ALARM PUNCH BLOCK WIRING
207070	SHEET 9	PLAN VIEW
207070	SHEET 10	EXTERIOR ELEVATION A WALL
207070	SHEET 11	EXTERIOR ELEVATION B WALL
207070	SHEET 12	EXTERIOR ELEVATION C WALL
207070	SHEET 13	EXTERIOR ELEVATION D WALL
207070	SHEET 14	INTERIOR ELEVATION A WALL
207070	SHEET 15	INTERIOR ELEVATION B WALL
207070	SHEET 16	INTERIOR ELEVATION C WALL
207070	SHEET 17	INTERIOR ELEVATION D WALL
207070	SHEET 18	REFLECTED CEILING – ELECTRICAL
207070	SHEET 19	REFLECTED CEILING – CABLE LADDER
207070	SHEET 20	REFLECTED CEILING – EQUIPMENT GROUND
207070	SHEET 21	INTERIOR ELEVATION A WALL – GROUNDING
207070	SHEET 22	INTERIOR ELEVATION B WALL – GROUNDING
207070	SHEET 23	INTERIOR ELEVATION C WALL – GROUNDING
207070	SHEET 24	INTERIOR ELEVATION D WALL – GROUNDING
207070	SHEET 25	GROUNDING DETAILS
207070	SHEET 26	* CONSTRUCTION DETAILS
207070	SHEET S1	LEFT LONG WALL PANEL
207070	SHEET S2	RIGHT LONG WALL PANEL
207070	SHEET S3	FRONT SHORT WALL PANEL
207070	SHEET S4	REAR SHORT WALL PANEL
207070	SHEET S5	ROOF PLAN
207070	SHEET S6	STANDING SEAM ROOF
207070	SHEET F1	FLOOR PLAN
40–0332–7070		SKID FLOOR
272022		* RECOMMENDED FOUNDATION
277029		* SETUP INSTRUCTIONS

*INDICATES DRAWING CONTAINING WORK TO BE DONE IN THE FIELD.

TITLE SHEET

VFP, INC.
CORPORATE OFFICE
5410 Fallowater Lane
Roanoke, Virginia 24018-0906
(540)977-0500 (540)977-5555 fax
MANUFACTURING FACILITY
540 Industrial Park Road
Duffield, Virginia 24244
(276)431-4000 (276)431-1756 fax

Except as may otherwise be provided by contract, these drawings and concepts are the sole property of VFP, Inc., they are issued in strict confidence, and shall not be reproduced in whole or part without the written permission of VFP, Inc.

DRAWN BY	T.SPIVEY/CMD
DATE	12/22/22
CHECKED BY	
DATE	04-20-2023
CHECKED BY	
DATE	

DO NOT SCALE DRAWING

SIZE	CAGE NO	REV
B		–

SCALE	MODEL
NTS	7070

TITLE: 12'0" x 16'0" x 9'1" LIGHTWEIGHT SHELTER

DRAWING NO. 207070

SHEET 1 OF 26

GENERAL NOTES

1. PERFORM ALL ELECTRICAL WORK TO THE APPLICABLE EDITION OF THE NATIONAL ELECTRICAL CODE, NFPA–70, OR AS SHOWN ON THE SPECIFIC SHELTER DRAWINGS.
2. SEAL ALL CONDUIT NIPPLES PENETRATING EXTERIOR WALLS (e.g. RECEPTACLE, DISCONNECTS, POWER ENTRIES) WITH URETHANE CAULK, OR AS NOTED ON THE SPECIFIC SHELTER DRAWINGS.
3. USE #10 x 1" SLOTTED HHW STAINLESS SHEET METAL SCREWS ON LIGHT WEIGHT SHELTERS AND CONTAINERS OR 1/4" x 1–1/4" TAP–CONS FOR CONCRETE SHELTERS FOR MOUNTING SMALL EXTERIOR ITEMS ON THE SHELTER. THIS WOULD APPLY TO ITEMS UP TO 40 POUNDS. (LIGHTS, LOUVERS, SHIPPING COVERS, ETC.) SHELTERS WITH EXTERIOR SIDING OR FINISHES MAY REQUIRE LONGER FASTENERS, AS NOTED ON THE SPECIFIC SHELTER DRAWINGS.
4. USE #10 x 1" SLOTTED HH PLATED WOOD SCREWS ON LIGHT WEIGHT SHELTERS, CONTAINERS AND CONCRETE SHELTERS FOR MOUNTING SMALL INTERIOR ITEMS IN THE SHELTER. THIS WOULD APPLY TO ITEMS UP TO 40 POUNDS (LIGHTS, FANS, JUNCTIONS BOXES, ETC.). SHELTERS WITH THICKER OR SPECIAL INTERIOR SHEATHING MAY REQUIRE LONGER FASTENERS, AS NOTED ON THE SPECIFIC SHELTER DRAWINGS.
5. USE 1/4" x 1–1/2" HHW STAINLESS TEK SHEET METAL SCREWS ON LIGHT WEIGHT SHELTERS AND CONTAINERS OR 1/4" x 3" TAP–CONS FOR CONCRETE SHELTERS FOR MOUNTING LARGE EXTERIOR ITEMS ON THE SHELTER. THIS WOULD APPLY TO ITEMS OVER 40 POUNDS (DISCONNECT SWITCHES, ACH UNITS, ETC.). SHELTERS WITH EXTERIOR SIDING OR FINISHES MAY REQUIRE LONGER FASTENERS, AS NOTED ON THE SPECIFIC SHELTER DRAWINGS.
6. USE 3/8" x 1–1/2" HH PLATED LAG BOLTS ON LIGHT WEIGHT SHELTERS, CONTAINERS AND CONCRETE SHELTERS FOR MOUNTING LARGE INTERIOR ITEMS IN THE SHELTER. THIS WOULD APPLY TO ITEMS OVER 40 POUNDS. (LARGE PANELS, CABLE LADDER HANGERS, DISCONNECT SWITCHES, ETC.) THESE LAG BOLTS REQUIRE A 1/4" PILOT TO BE DRILLED BEFORE INSTALLING THE LAG BOLT. SHELTERS WITH THICKER OR SPECIAL INTERIOR SHEATHING MAY REQUIRE LONGER FASTENERS, AS NOTED ON THE SPECIFIC SHELTER DRAWING.
7. USE 3/4" EMT CONDUIT ON WALLS & CEILING, OR AS NOTED ON THE SPECIFIC SHELTER DRAWINGS.
8. CEILING LIGHTING FIXTURES REQUIRE THE USE OF 1/2" EMT CONDUIT ONLY.
9. INSTALL COMPRESSION CONNECTORS AT EACH END OF EMT CONDUIT (EXCEPT PVC CONDUIT CONTAINING GROUNDING ELECTRODE CONDUCTOR); INSTALL LT CONNECTORS AT EACH END OF LT CONDUIT; INSTALL BUSHINGS ON CONDUITS 1 1/4" AND LARGER.
10. USE LOCKNUTS AND BUSHINGS AT EACH END OF RIGID NIPPLES, OR AS NOTED ON SPECIFIC SHELTER DRAWINGS.
11. ASSUME ADJACENT PIECES OF EQUIPMENT THAT ARE NOT DIMENSIONED TO BE 2" APART.
12. ALL ELECTRICAL WIRING SHALL BE INSTALLED IN SURFACE–MOUNTED EMT CONDUIT. POWER WIRING SHALL BE 600V THHN OR THWN WIRE SIZED IN ACCORDANCE WITH NFPA–70 AND SHALL BE A MINIMUM OF 12 AWG. ALL CONTROL WIRING SHALL BE 250V TFFN STRANDED WIRE SIZED IN ACCORDANCE WITH MANUFACTURER OR LISTING INSTRUCTIONS FOR CLASS 2 THERMOSTAT, GENERATOR, OR FIRE DETECTION SYSTEMS AND SHALL BE A MINIMUM OF 18 AWG, OR AS NOTED ON THE SPECIFIC SHELTER DRAWINGS.
13. UNLESS OTHERWISE NOTED ON THE SPECIFIC SHELTER DRAWINGS, GROUND ALL ELECTRICAL ENCLOSURES WITH:
    - 13.a. 12 AWG GROUND WIRE FOR CIRCUITS OF 20 AMPS OR LESS.
    - 13.b. 10 AWG GROUND WIRE FOR CIRCUITS OF 21 AMPS TO 60 AMPS.
    - 13.c. 8 AWG GROUND WIRE FOR CIRCUITS OF 61 AMPS TO 100 AMPS.
14. FOR WIRING, CONFORM TO:
    - 14.a. SOLID COPPER FOR 12 AWG AND SMALLER.
    - 14.b. STRANDED COPPER FOR 10 AWG AND LARGER.
    - 14.c. 18 AWG STRANDED COPPER FOR CONTROL WIRING.
    - 14.d. 22 AWG SOLID COPPER TWISTED 3 CONDUCTOR CABLE WITH A 250 VOLT RATING FOR ALARMS, OR AS NOTED ON THE SHELTER SPECIFIC DRAWINGS.
15. All CIRCUITS SHALL HAVE A DEDICATED NEUTRAL, OR AS NOTED ON THE SHELTER SPECIFIC DRAWINGS.
16. ALL SHELTERS THAT REQUIRE A FIRE–SUPPRESSION SYSTEM SHALL BE SEALED AIRTIGHT PER DRAWING NO.473460.
17. INSTALL I.D. PRINTED LABELS PER THE LEGEND AND BILL OF MATERIAL REFERENCING, OR AS NOTED ON THE SPECIFIC SHELTER DRAWINGS.
18. COLOR CODES FOR WIRING.
    TRAVELERS – BROWN.
    SWITCH LEGS – YELLOW.
    - 18.a. SINGLE–PHASE 120/240:
      A – BLACK
      B – RED
      N – WHITE
      G – GREEN
    - 18.b. THREE–PHASE 120/208V:
      A – BLACK
      B – RED
      C – BLUE
      N – WHITE
      G – GREEN
    - 18.c. THREE–PHASE 120/240V (HIGH LEG):
      A – BLACK
      B – ORANGE (HIGH LEG)
      C – BLUE
      N – WHITE
      G – GREEN
    - 18.d. THREE–PHASE 480/277:
      A – BROWN
      B – ORANGE
      C – YELLOW
      N – GRAY
      G – GREEN
    - 18.e. 48VDC/125VDC:
      NEGATIVE – BLACK
      POSITIVE – RED

    THESE ARE THE STANDARD COLOR CODES OR AS NOTED ON THE SPECIFIC SHELTER DRAWINGS.
19. COMPLY WITH ANSI Z97.1 FOR GLASS & GLAZING.
20. PROVIDE GREEN GROUNDING CONDUCTOR IN EACH RACEWAY, CONTAINING CIRCUITS, IN ACCORDANCE WITH NOTE 13.
21. ALL RECEPTACLE BOXES SHALL BE SURFACE–MOUNTED, METALLIC, WITH FACE PLATES TO MATCH, WITH PRINTED LABELS. LABELS SHALL FOLLOW THE SAME NUMBERING CONVENTIONS UTILIZED IN THE ASSOCIATED BREAKER PANEL.

STANDARD WIRING PROCEDURES

1. SCOPE
   THIS DOCUMENT PRESENTS STANDARD WIRING PROCEDURES TO STANDARDIZE AND GOVERN WIRING METHODS.

2. APPLICABLE DOCUMENTS
   THE FOLLOWING DOCUMENTS OF THE ISSUE IN EFFECT AT THE TIME OF WIRING INSTALLATION:
   NATIONAL ELECTRICAL CODE
   MANUFACTURERS MANUAL

3. PROCEDURE

   3.1. COLOR CODING SINGLE–PHASE WIRING 8 AWG AND SMALLER
   ALL WIRE CONNECTING TO BREAKERS OR CONNECTED ELSEWHERE IN THE SAME CIRCUIT SHALL BE COLOR CODED AS FOLLOWS:
   A PHASE – BLACK
   B PHASE – RED
   NEUTRAL – WHITE
   GROUND – GREEN

   3.2. COLOR CODING SINGLE–PHASE 6 AWG AND LARGER
   ALL WIRE CONNECTING TO BREAKERS OR CONNECTED ELSEWHERE IN THE SAME CIRCUIT SHALL BE BLACK WIRE WITH THE APPROPRIATE COLOR TAPE APPLIED TO EACH END OF THE WIRE AS DESCRIBED IN 3.1 ABOVE.
   THE EXCEPTION TO THIS RULE IS THAT ALL GENERATOR RECEPTACLES AND/OR PLUGS SHALL BE COLOR CODED THE FULL LENGTH OF THE WIRE. (COLORED WIRE TO BE USED OR STRIPED THE WHOLE LENGTH OF THE WIRE IF COLORED WIRE IS NOT AVAILABLE)

   3.3. COLOR CODING THREE–PHASE WIRING 8 AWG OR SMALLER
   ALL WIRE CONNECTING TO BREAKERS OR CONNECTED ELSEWHERE IN THE SAME CIRCUIT SHALL BE COLOR CODED AS FOLLOWS:

UNDER 250VAC	OVER 250VAC
A PHASE – BLACK	A PHASE – BROWN
B PHASE – RED	B PHASE – ORANGE
C PHASE – BLUE	C PHASE – YELLOW
NEUTRAL – WHITE	NEUTRAL – GREY
GROUND – GREEN	GROUND – GREEN

   EXCEPTION: B PHASE OF HI–LEG DELTA TO BE ORANGE

   3.4. COLOR CODING THREE–PHASE WIRING 6 AWG OR LARGER ALL
   WIRE CONNECTING TO BREAKERS OR CONNECTED ELSEWHERE IN THE SAME CIRCUIT SHALL BE BLACK WIRE WITH THE APPROPRIATE COLOR TAPE APPLIED TO EACH END OF THE WIRE AS DESCRIBED IN 3.3 ABOVE.
   THE EXCEPTION TO THIS RULE IS THAT ALL GENERATOR RECEPTACLES AND/OR PLUGS SHALL BE COLOR CODED THE FULL LENGTH OF THE WIRE. (COLORED WIRE TO BE USED OR STRIPED THE WHOLE LENGTH OF THE WIRE IF COLORED WIRE IS NOT AVAILABLE)

   3.5. THERE WILL NOT BE ANY WIRE OTHER THAN BLACK WITH COLOR PHASING TAPE USED TO IDENTIFY PHASES. EXAMPLE: A RED WIRE MAY NOT BE TAPED BLUE FOR A C PHASE. IF CIRCUMSTANCES ABSOLUTELY DICTATE PHASE TAPING A COLORED WIRE, IT MUST BE TAPED SO THAT ALL VISIBLE WIRE IS COVERED WITH THE PHASE TAPE.

   3.6. COLOR CODING AIR CONDITIONER THERMOSTAT WIRING
   RED: 24VAC FROM TRANSFORMER TO R OR RH (RED HEATING) TERMINAL.
   RED: 24VAC FROM TRANSFORMER TO R OR RC (RED COOLING) TERMINAL.
   WHITE: FROM W (WHITE) TERMINAL ON BASE OR PLATE TO PRIMARY HEATING CONTROL.
   YELLOW: FROM Y (YELLOW) TERMINAL ON BASE OR PLATE TO PRIMARY COOLING CONTROL.
   GREEN: FROM G (GREEN) BASE TERMINAL TO FAN (RELAY).
   BROWN: COMMON.
   BLUE: COMMON, IF TWO ARE REQUIRED OR BROWN IS NOT AVAILABLE.

   3.7. COLOR CODING SWITCH LEGS
   ALL SWITCH LEGS SHALL BE YELLOW CONDUCTORS ONLY UNLESS OTHER WISE SPECIFIED.

   3.8. COLOR CODING TRAVELERS
   ALL SWITCH TRAVELERS SHALL BE BROWN.

   3.9. WIRE DESIGNATION MARKING
   3.9.A. TERMINAL STRIP WIRING SHALL BE MARKED WITH CIRCUIT NUMBER FIRST, THEN WITH TERMINAL NUMBER SPACED AFTER.

   3.10. WIRE DROPS
   3.10.A. ALL WIRE DROPS FOR CFE OR CIE OR FUTURE USE SHALL BE MARKED AND/OR TAGGED ACCORDING TO BREAKER SCHEDULE, INDICATING CIRCUIT NUMBER AND DESIGNATION.
   3.10.B. ALL WIRE DROPS SHALL BE CAPPED WITH APPROPRIATELY SIZED WIRE NUT FOR SAFETY PURPOSES.
   3.10.C. ALL DROPS IN FLEXIBLE CONDUIT SHALL BE RAN WITH STRANDED WIRE.

   3.11. WIRE TERMINATION
   3.11.A. ALL WIRE DROPS FOR CFE OR CIE OR FUTURE USE SHALL BE MARKED AND/OR TAGGED ACCORDING TO BREAKER SCHEDULE, INDICATING CIRCUIT NUMBER AND DESIGNATION.
   3.11.B. ALL WIRE DROPS SHALL BE CAPPED WITH APPROPRIATELY SIZED WIRE NUT FOR SAFETY PURPOSES.
   3.11.C. ALL DROPS IN FLEXIBLE CONDUIT (LIQUID TIGHT OR ANY OTHER) SHALL BE RAN WITH STRANDED WIRE.

   3.12. ALL WIRING IN PANELS, CONTROL BOXES, ETC. SHALL BE FORMED AND WIRE TIED IN A NEAT AND PROFESSIONAL MANNER.

   3.13. CIRCUIT POLARIZATION
   3.13.A. ALL RECEPTACLES, PLUGS, AND CONNECTORS SHALL BE POLARIZED AS PER THE LATEST EDITION OF THE NEC.
   3.13.B. THE NEUTRAL CIRCUIT CONDUCTOR SHALL ALWAYS BE ATTACHED TO THE WHITE (OR SILVER) COLORED SCREW OR LUG.

   3.14. COLOR CODING FIRE ALARM SYSTEM WIRING
   3.14.A. RED – ALL POSITIVE (+) LEADS
   BLACK – ALL NEGATIVE (–) LEADS
   3.14.B. SEE ALARM PANEL DRAWINGS FOR SPECIFIC WIRING AND COLOR CODING.

   3.15. STRANDED WIRE. STRANDED WIRE SHALL BE USED IN APPLICATIONS WHERE THE WIRE WILL BE SUBJECT TO VIBRATION OR MOVEMENT. EXAMPLE: VIBRATION–FAN, MOTORIZED SHUTTERS, MOTORS IN GENERAL. MOVEMENT–WIRING ACROSS DOOR HINGES, ETC.

   3.16. WIRE SIZING FOR FIRE ALARM SYSTEM WIRING
   3.16.A. 120VAC SUPPLY 14 AWG MIN., 12 AWG MAX.
   3.16.B. INITIATING CIRCUITS 18 AWG MIN., 12 AWG MAX.
   3.16.C. ALARM SIGNALING 22 AWG MIN., 12 AWG MAX.

   3.17. CONDUIT SIZING FOR ALARM WIRING (3/22 AWG SOLID UNSHIELDED)
   3.17.A. 3/4" CONDUIT – 12 (3C/22 AWG ALARM CABLES) MAX OR 6 (3C/18 ALARM CABLES) MAX
   3.17.B. 1" CONDUIT – 25 (3C/22 AWG ALARM CABLES) MAX OR 12 (3C/18 AWG ALARM CABLES) MAX

   3.18. IN ALL ELECTRICAL INSTALLATIONS "FIRE ALARM, GENERATORS, U.P.S. AND H.V.A.C., ETC. THE MANUFACTURERS WRITTEN INSTRUCTIONS SHALL BE USED FOR INSTALLATION GUIDELINES. THESE MANUFACTURERS REQUIREMENTS AND INSTRUCTIONS SHALL OVERRIDE OTHER VFP DOCUMENTATION UNLESS SPECIFICALLY ADDRESSED ON THE DRAWINGS FOR THAT JOB.

GENERAL NOTES & WIRING PROCEDURES

REVISIONS

CHG. BY	APPR. BY	DATE	REV

APPROVED: STATE OF CA - CERTIFIED DAA
Based on the requirements of title 25 California code of regulations
Chapter 3 subchapter 2 Commercial Modular
Date: 04-25-2023 | Expires: 07-31-2024
Approval # PFS: 23-002714
THIS APPROVAL DOES NOT AUTHORIZE OR APPROVE ANY OMISSION OR DEVIATION FROM THE REQUIREMENTS OF STATE LAWS OR APPLICABLE LOCAL ORDINANCES . THIS APPROVAL IS LIMITED TO FACTORY-BUILT PORTION ONLY.
PFS CORPORATION - Cottage Grove, WI

REGISTERED PROFESSIONAL ENGINEER
ALEXANDER TAKAHASHI
E-8508
Exp. 09-30-2024
ELECTRICAL
STATE OF CALIFORNIA

04-10-2023

Alexander Takahashi, P.E.
I certify that these documents were prepared or approved by me, and I am a duly licensed professional engineer under the laws of the State of California.
License No: E8508
Expiration Date: 09/30/24

Site Name(s):
STRAUCH DRIVE
P.O.'s #: 9013484/
AGREEMENT 3002606
VFP Job #: 220742/DWG
Dash #: -001

VFP, INC.
CORPORATE OFFICE
5410 Fallowater Lane
Roanoke, Virginia 24018-0906
(540)977-0500 (540)977-5555 fax
MANUFACTURING FACILITY
540 Industrial Park Road
Duffield, Virginia 24244
(276)431-4000 (276)431-1756 fax

Except as may otherwise be provided by contract, these drawings and concepts are the sole property of VFP, Inc., they are issued in strict confidence, and shall not be reproduced in whole or part without the written permission of VFP, Inc.

DRAWN BY: T.SPIVEY/CMD	DATE: 12/22/22
CHECKED BY:	DATE: 04-10-202
CHECKED BY:	DATE:

DO NOT SCALE DRAWING

SIZE	CAGE NO	REV
B		–

SCALE	MODEL
NTS	7070

TITLE: 12'0" x 16'0" x 9'1" LIGHTWEIGHT SHELTER

DRAWING NO. 207070

SHEET 2 OF 26

LIGHTWEIGHT FASTENING SCHEDULE

BUILDING ELEMENT	FASTENER SIZE & TYPE	FASTENER SPACING
WALL "C" PAN TO WALL "C" PAN CONNECTION	LOCKING PANS, TEK SCREW, WAFFER HEAD #8 x 3/4"	6" FROM ENDS, THEN 24" O.C.
ROOF "C" PAN TO ROOF "C" PAN CONNECTION	LOCKING PANS, TEK SCREW, WAFFER HEAD #8 x 3/4"	6" FROM ENDS, THEN 24" O.C.
WALL PANEL TO WALL PANEL CONNECTION	WELD ONLY	1" FILLET WELD @ 24" O.C.
WALL PANEL TO ROOF PANEL CONNECTION	WELD ONLY	1" FILLET WELD @ EVERY ROOF SEAM
TRACK PANEL TO WALL PANEL & ROOF PANEL (SEE NOTE #1)	TEK SCREW, WAFFER HEAD #8 x 3/4"	AT EACH PANEL SEAM
18GA BLOCKING ATTACHMENT TO CPAN	TEK SCREW, WAFFER HEAD #8 x 3/4"	24" O.C. MAX
CONCRETE SKID		
WALL PANEL TO CONCRETE SKID CONNECTION	WELD ONLY	1" FILLET WELD @ 16" O.C.
SKID FLOOR		
WALL PANEL TO SKID/FLOOR CONNECTION	WELD ONLY	1" FILLET WELD @ 16" O.C.
EXTERIOR FINISH		
STENNI	TEK SCREW, #6 x 1-5/8",DW,BH, (COLOR A.R.) PART# 160051-063	10" O.C. @ PERIMETER 16" SCREW PATTERN NOT MORE THAN 10" APART O.C.
1/2" OR 5/8" GYPSUM (EXTERIOR RATED)	TEK SCREW, #8 x 3",DW,BH PART# 165206-085	6" O.C. @ PERIMETER 16" SCREW PATTERN NOT MORE THAN 6" APART O.C.
INTERIOR TRIM		
CORNER MOLD	SCREW, #8 x 1/2" (PAINT WHITE) PART# 165237-023	12" O.C. (SILICONE ALL GAPS 1/8" OR GREATER)
T-TRIM	SILICONE	SILICONE GAP & APPLY T-TRIM (SILICONE ALL GAPS 1/8" OR GREATER)
INTERIOR FINISH-WALLS		
MIN. 7/16" NON-STRUCTURAL SHEATHING	TEK SCREW, BH, #8 x 1-5/8" QUICK DRIVE	12" O.C. @ PERIMETER 16" O.C. @ INTERMEDIATE
1/2" OR 5/8" GYPSUM/FRP (SECOND LAYER)	TEK SCREW, #8 x 3",DW,BH PART# 165206-085	12" O.C. @ PERIMETER 16" O.C. @ INTERMEDIATE
5/8" OR 3/4" GYPSUM (FIRST LAYER)	TEK SCREW, BH, #8 x 1-5/8" QUICK DRIVE	12" O.C. @ PERIMETER 16" O.C. @ INTERMEDIATE
INTERIOR FINISH-CEILING		
MIN. 7/16" NON-STRUCTURAL SHEATHING	TEK SCREW, BH, #8 x 1-5/8" QUICK DRIVE	12" O.C. @ PERIMETER 16" SCREW PATTERN NOT MORE THAN 24" APART
1/2" OR 5/8" GYPSUM/FRP (SECOND LAYER)	TEK SCREW, #8 x 3",DW,BH PART# 165206-085	12" O.C. @ PERIMETER 16" SCREW PATTERN NOT MORE THAN 24" APART
5/8" OR 3/4" GYPSUM (FIRST LAYER)	TEK SCREW, BH, #8 x 1-5/8" QUICK DRIVE	APPLY IN BEADS OR RIBBONS 4" O.C. INSTALLED PER MANUFACTURER RECOMMENDATIONS
INTERIOR PARTITION WALL		
PARTITION WALL TO WALL PANEL	TEK SCREW, #8 x 2-1/2,BH,PL PART# 8N050UKL2	16" O.C.
STANDING SEAM ROOF		
	TEK SCREW, #8 x 3/4"	8" O.C. @ PERIMETER AND AT THE WIND STAY CLIP AS SHOWN ON THE DRAWING
SKID FLOOR SHEATHING		
5/8" VIROC (T&G)	TEK SCREW, #10 x 1-1/2" SELF-EMBEDDING, NONCORROSIVE ROUTER HEAD	12" O.C. @ PERIMETER 16" O.C. INTERMEDIATE

NOTES:
1) ADD AN ADDITIONAL 4 SCREWS (MIN.) AT EACH LIFT POINT IN THE TRACK.

ABBREVIATIONS

AC	AC POWER PANEL
ACH	AIR CONDITIONER W/O HEAT
AFF	ABOVE FINISHED FLOOR
AP	ALARM PANEL
AR	AS REQUIRED
ATB	ALARM TERMINAL BOARD
ATS	AUTOMATIC TRANSFER SWITCH
AWN	AWNING
BC	BATTERY CHARGER
BR	BATTERY RACK
CA	CAMERA
CFE	CUSTOMER FURNISHED EQUIPMENT
CIE	CUSTOMER INSTALLED EQUIPMENT
CKT	CIRCUIT
CB	CIRCUIT BREAKER
CL	CABLE LADDER
CLH	CABLE LADDER HANGER
CR	CARD READER
CT	CABLE TRAY
CTH	CABLE TRAY HANGER
D1	SMOKE DETECTOR
DA	DOOR ALARM
DC	DC POWER PANEL
DCL	DC LIGHTS
ECB	ENCLOSED CIRCUIT BREAKER
ESTOP	EMERGENCY STOP
EW	EYE WASH
EXT	EXTERIOR
FD	FOLDING DESK
FE	FIRE EXTINGUISHER
FK	FIRST AID KIT
FN	FAN
FT	FIBER TRAY
GB	GROUND BAR
GFCI	GROUND FAULT CIRCUIT INTERRUPTER
GNR	GENERATOR RECEPTACLE
GP	GROUND PAD
HD	HEAT DETECTOR
HGD	HYDROGEN GAS DETECTOR
HHA	HIGH HUMIDITY ALARM
HHS	HIGH HUMIDITY SENSOR
HOA	HAND/OFF/AUTO SWITCH
HP	HEAT PUMP
HTA	HIGH TEMPERATURE ALARM
INT	INTERIOR
JB	JUNCTION BOX
K1	RELAY
LA	LIGHTNING ARRESTOR
LC	LIGHTING CONTACTOR
LDA	LEAK DETECTION ALARM
LE	LIGHT, EXTERIOR
LF	LIGHT FIXTURE, INTERIOR
LHA	LOW HUMIDITY ALARM
LJB	LIGHTING JUNCTION BOX
LM	LIGHT, EMERGENCY/EXIT
LV	LOUVER

LX	LIGHT, FLOOD, EXTERIOR
MB	MOUNTING BOARD
MGB	MAIN GROUND BAR
MS	MOTION SENSOR
MTR	MOTOR
MTS	MANUAL TRANSFER SWITCH
NIP	NIPPLE
NTS	NOT TO SCALE
OPN	OPENING
PB	PUNCH BLOCK
PBS	PUSH BUTTON SWITCH
PC	PHOTOCELL
PFA	POWER FAILURE ALARM
PL	PLACES
PS	PREPARED SPACE
RCPT	RECEPTACLE, INTERIOR
REF	REFERENCE
S1	SWITCH
SD	SAFETY DISCONNECT
SPD	SURGE PROTECTION DEVICE
T1	THERMOSTAT/CONTROLLER, LEAD LAG
TB	TERMINAL BLOCK
TGB	TELCO GROUND BAR
TMB	TELCO MOUNTING BOARD
TMR	TIMER
TYP	TYPICAL
UON	UNLESS OTHERWISE NOTED
UPS	UNINTERRUPTIBLE POWER SUPPLY
WB	WIRE BASKET
WGE	WAVE GUIDE ENTRY
WR	RCPT, EXTERIOR, WEATHER RESISTANT, GFCI

SYMBOLS

- – RECEPTACLE, QUADPLEX
- – RECEPTACLE, DUPLEX
- – DUPLEX, WEATHER RESISTANT
- – RECEPTACLE, TWISTLOCK
- – JUNCTION BOX, 6 X 6
- – JUNCTION BOX, 4 X 4
- – JUNCTION BOX, 2 X 4
- nnn – REFERENCE PART LIST ITEM NUMBER
- a – REFERENCE DRAWING NOTE
- nnn – TABLE INDICATOR
- A – DELTA REVISION
- – NN – DETAIL CALLOUT
- – NEC WORKING SPACE

APPROVED: STATE OF CA - CERTIFIED DAA

Based on the requirements of title 25 California code of regulations
Chapter 3 subchapter 2 Commercial Modular

Date: 04-25-2023 Expires: 07-31-2024

Approval # PFS: 23-002714

THIS APPROVAL DOES NOT AUTHORIZE OR APPROVE ANY OMISSION OR DEVIATION FROM THE REQUIREMENTS OF STATE LAWS OR APPLICABLE LOCAL ORDINANCES . THIS APPROVAL IS LIMITED TO FACTORY-BUILT PORTION ONLY.

PFS CORPORATION - Cottage Grove, WI

FASTENING SCHEDULE & LEGEND

REVISIONS

CHG. BY	APPR. BY	DATE	REV

REGISTERED PROFESSIONAL ENGINEER
ALEXANDER TAKAHASHI
E-8508
EXP. 09-30-2024
ELECTRICAL
STATE OF CALIFORNIA

04-20-2023

Alexander Takahashi, P.E.
I certify that these documents were prepared or approved by me, and I am a duly licensed professional engineer under the laws of the State of California.
License No: E8508
Expiration Date: 09/30/24

Site Name(s):
STRAUCH DRIVE
P.O.'s #: 9013484/
AGREEMENT 3002606
VFP Job #: 220742/DWG
Dash #: -001

VFP, INC.
CORPORATE OFFICE
5410 Fallowater Lane
Roanoke, Virginia 24018-0906
(540)977-0500 (540)977-5555 fax
MANUFACTURING FACILITY
540 Industrial Park Road
Duffield, Virginia 24244
(276)431-4000 (276)431-1756 fax

Except as may otherwise be provided by contract, these drawings and concepts are the sole property of VFP, Inc., they are issued in strict confidence, and shall not be reproduced in whole or part without the written permission of VFP, Inc.

DRAWN BY	T.SPIVEY/CMD
DATE	12/22/22
CHECKED BY	
DATE	04-20-2023
CHECKED BY	
DATE	

DO NOT SCALE DRAWING

SIZE	CAGE NO	REV
B		-

SCALE	MODEL
NTS	7070

TITLE
12'0" x 16'0" x 9'1"
LIGHTWEIGHT SHELTER

DRAWING NO.
207070

SHEET
3 OF 26

ITEM	QTY	U/M	PART NUMBER	DESCRIPTION	LEGEND
1	1	EA	7070AC1	LOAD CENTER,400A,MB,1P/3W,40SP,N1	AC
2	1	EA	EZT2060S	COVER	
3	1	EA	EZB2060R	ENCLOSURE	
4	8	EA	Q0120	CKT BKR,1P/20,10K,120-240/60,SNP-IN	
5	1	EA	Q0215	CKT BKR,2P/15,10K,120-240/60,SNP-IN	
6	2	EA	Q0235	CKT BKR,2P/20,10K,120-240/60,SNP-IN	
7	1	EA	PK23GTA	GROUND BAR KIT,LD CTR,23 TERM	
13	1	EA	40-1809-001	ATS,200A,120/240V,1PH,N1	ATS
39	1	EA	ASE6X6X4NK	ENCLOSURE,N1,SCVR,PNTD,NK,6X6X4	
41	29	EA	30-0059-001	BOX,4 SQX2-1/8D,1/2-3/4KO	
42	2	EA	30-0070-001	BOX,W/R,SG,2D,(3)1/2 HUBS	
45	19	EA	30-0074-015	COVER,4 SQ,STEEL,BLANK	
46	1	EA	30-0074-005	COVER,4 SQ,SGL SW,1/2 DEEP	
47	1	EA	30-0074-006	COVER,4 SQ,DBL SW,1/2 DEEP	
48	1	EA	30-0074-009	COVER,4 SQ,SGL DEV,RAISED 1/4	
49	1	EA	30-0074-008	COVER,4 SQ,ROUND DEVICE,RAISED 5/8	
50	5	EA	30-0074-003	COVER,4 SQ,1-DUPLEX,1/2DEEP,STEEL	
51	1	EA	30-0078-004	COVER,W/R,SGL GNG,CLEAR COVER	
55	5	EA	30-0148-001	RECEPTACLE,DUP,20A,125V,BROWN	RCPT
56	1	EA	30-0147-003	RECEPT,20A,GFCI,DUP,W/R,125V,BRN	WR
57	3	EA	30-0152-120	SWITCH,TOGGLE,SPST,20A,120-277V,BRN	S1-3
60	5	EA	30-0055-050-CH-L	NIPPLE,RIGID,1/2XCHASE,LONG	
61	10	EA	30-0055-050-500	NIPPLE,RIGID,1/2X5 IN	
62	2	EA	30-0055-075-500	NIPPLE,RIGID,3/4X5 IN	
63	1	EA	30-0055-200-500	NIPPLE,RIGID,2X5 IN	
64	2	EA	30-0055-300-500	NIPPLE,RIGID,3X5 IN	
70	3	EA	KT-MSLED28-4-840-VDIM-P	FIXTURE,LTG,LED,4FT,120/277,28W	LF
71	1	EA	LESW-15-19W-MCTP-P	LIGHT,WALL PK,LED,PC,19W,120/277	LE
72	1	EA	ECC-R	LIGHT,EM/EXIT,120/277V,LED,RED	LM
75	1	EA	S1209F	DETECTOR,SMK/PHOTO,120VAC,W/BATT	D1

ITEM	QTY	U/M	PART NUMBER	DESCRIPTION	LEGEND
83	1	EA	40-1801-3684	DOOR,UNV,18/26P,16GA,36X84	
84	1	EA	40-1800-3684-RHR	DOOR FRAME,RHR,3SIDED,14GA,36X84	
85	1	EA	PDCAP30	DOOR CAP,MESKER,36IN	
86	1	EA	DH-4W-SS	DOOR HOLDER,W/KEEPER,EXT,SS,4IN	
87	1	EA	1601HX689	CLOSER,DOOR,HEAVY DUTY,MANUAL HYD	
88	1	EA	1C7A1626	CORE,BEST,7 PIN,A TYPE	
89	1	EA	200NA-36	DOOR SWEEP,ALUM/NEOP,36INX1-11/16	
90	1	EA	40-0082-001	THRESHOLD,CONC,36 AND 42 IN DOORS	
91	2	EA	DJFS260PC	FILLER PLATE,STRIKE,ASA,4-7/8X1-1/4	
92	1	EA	40-0135-040	FLASHING,AL,1/8X1-1/2X2X40,145 DEG	
93	1	EA	D4126D353144	LOCK,DBOLT,BEST	
94	1	EA	US24R40932D	DOOR BUMPER,SS,CONCAVE,3/4X2-5/8	
95	3	EA	BB5-NRP4.5X4.5US32D	HINGE,DOOR,BB,TMP PRF,SS,4-1/2SQ	
96	1	EA	X-75-F-US26D	LEVERSET,PASSAGE	
97	1	KIT	DS0504070-BR	GASKET KIT,DOOR,48X70,ALUM/FOAM,BRN	
98	1	EA	40-0131-002	HOOD,AWNING,56X24,A/C TAN,F/C	AWN
99	1	EA	DJEF161	FILLER PLATE,LATCH,STD,2-1/4X1-1/8	
100	1	EA	DJEFB6	FILLER PLATE,LATCH,MORTSE,8X1-1/4	
101	1	EA	DJBTS160PC	FILLER PLATE,T-STRIKE,2-3/4X1-1/8	
102	1	EA	78003658	PLATE,STRIKE ADAPTER,MORTISE/STD.	
103	1	EA	7939WG-2WH	DOOR ALARM,MAG,FORM C,WHT,30VDC	DA
115	1	EA	30-0002-C10	FIRE EXTING,CO2,10B:C,10LB	FE
119	150	EA	40067-BC	BRIDGE-CLIP,66 BLOCK	
120	3	EA	S66M2-5W	66 BLOCK,50PR,(2)F 25PR CONN	PB1-3
134	1	EA	30-0003-001	FIRST AID KIT,10 PERS,7.7X4.6X2.4	FK
135	1	EA	3ARD6	EYE WASH STATION,PERSONAL,16OZ,	EW

ITEM	QTY	U/M	PART NUMBER	DESCRIPTION	LEGEND
165	1	EA	E1447	ENTRY PANEL,4.4X4.4,A/C TAN	WGE
167	16	EA	CR701-ZY	CABLE RING,1-1/2X1-3/4,ZP	
168	8	EA	RFCH1	END CAP,RUBBER,1-1/2IN TRAY	
169	12	EA	CHB1	CABLE TRAY,CEILING HGR BKT	CLH
170	2	PR	CC12	CABLE TRAY,CORNER KIT,PR,1-1/2 IN	
171	3	EA	10024ZY	CABLE TRAY,STRAGHT,1-1/2X24X116-1/2	CL
172	12	EA	SHB1	SLOTTED HANGER BKT,1-17/32,ZN	
173	2	EA	30-0093-050-120	THREADED ROD,ZINC PL,1/2-13,10 FT	
180	1	EA	30-0317-096	PANEL,FRP,WHT,3/4 PLY,48X96	TMB
181	1	EA	3X740	RELAY,DPDT,12A/120VAC,240VAC COIL	K1
182	1	EA	5X852	SOCKET,RELAY,8 PIN,ROUND	
186	2	EA	W36A*-A00XWXXXJ	AIR COND,36/0,230/208V,1P,RELAY,RH	ACH1,2
187	2	EA	40-0135-048	FLASHING,AL,1/8X1-1/2X2X48,145 DEG	
188	2	EA	DARH-TB-28WX14HMILL	GRILLE,FIXED,28W14H,MILL,NO HOLES	
189	2	EA	DAH-TB-28WX8HMILL	GRILLE,SGLDFL,28W8H,MILL,NO HOLES	
190	2	EA	40-0030-0	SLEEVE,A/C SP/RTN,28x18x3-1/2,24GA	
192	1	EA	MC4002-B	CONTROLLER,LEAD/LAG,10ALM	T1
193	1	EA	W43A-14C	HUMIDISTAT,SPDT,120/240VAC,0-70% RH	HHS
200	1	EA	GBI14424M	GROUND BAR ASSY,1/4X4X24	MGB
201	1	EA	40-0006-001	TRAPEZE ASSEMBLY	
210	4	EA	55053-703	RELAY RACK,19"	RK

APPROVED: STATE OF CA - CERTIFIED DAA

Based on the requirements of title 25 California code of regulations

Chapter 3 subchapter 1: Commercial Modular

Date: 04-25-2023 Expires: 07-31-2024

Approval # PFS 23-002714

THIS APPROVAL DOES NOT AUTHORIZE OR APPROVE ANY OMISSION OR DEVIATION FROM THE REQUIREMENTS OF STATE LAWS OR APPLICABLE LOCAL ORDINANCES . THIS APPROVAL IS LIMITED TO FACTORY-BUILT PORTION ONLY.

PFS CORPORATION - Cottage Grove, WI

BILL OF MATERIALS

REVISIONS			
CHG. BY	APPR. BY	DATE	REV

REGISTERED PROFESSIONAL ENGINEER
ALEXANDER TAKAHASHI
E-8508
EXP. 09-30-2024
ELECTRICAL
STATE OF CALIFORNIA

Alexander Takahashi, P.E.
I certify that these documents were prepared or approved by me, and I am a duly licensed professional engineer under the laws of the State of California.
License No: E8508
Expiration Date: 09/30/24

Site Name(s):
STRAUCH DRIVE
P.O.'s #: 9013484/ AGREEMENT 3002606
VFP Job #: 220742/DWG
Dash #: -001

VFP, INC.

CORPORATE OFFICE
5410 Fallowater Lane
Roanoke, Virginia 24018-0906
(540)977-0500 (540)977-5555 fax

MANUFACTURING FACILITY
540 Industrial Park Road
Duffield, Virginia 24244
(276)431-4000 (276)431-1756 fax

Except as may otherwise be provided by contract, these drawings and concepts are the sole property of VFP, Inc., they are issued in strict confidence, and shall not be reproduced in whole or part without the written permission of VFP, Inc.

DRAWN BY: T.SPIVEY/CMD	DATE: 12/22/22
CHECKED BY:	DATE: 04-25-2023
CHECKED BY:	DATE:

DO NOT SCALE DRAWING

SIZE	CAGE NO	REV
B		-

SCALE	MODEL
NTS	7070

TITLE: 12'0" x 16'0" x 9'1" LIGHTWEIGHT SHELTER

DRAWING NO. 207070

SHEET 4 OF 26

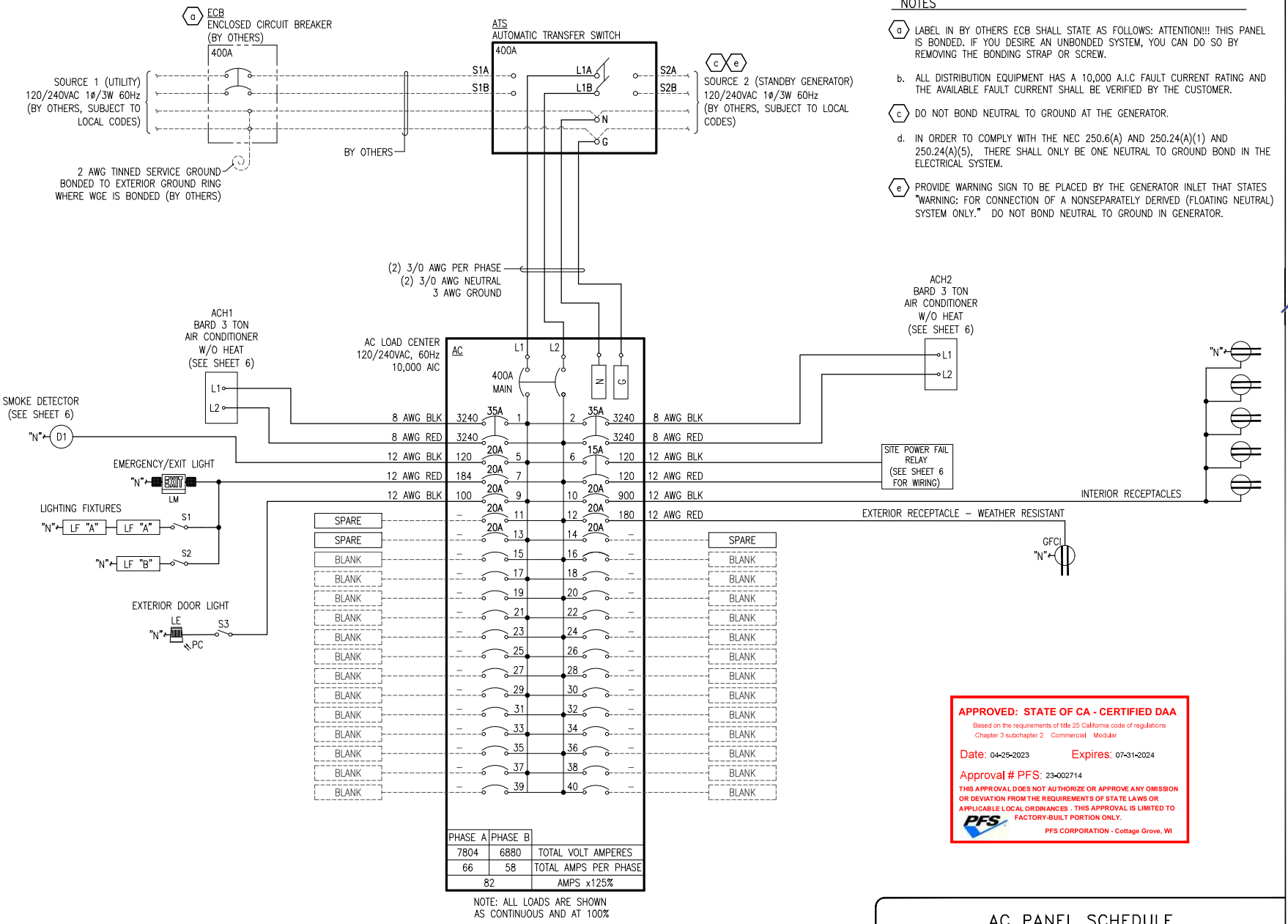

NOTES

a. LABEL IN BY OTHERS ECB SHALL STATE AS FOLLOWS: ATTENTION!!! THIS PANEL IS BONDED. IF YOU DESIRE AN UNBONDED SYSTEM, YOU CAN DO SO BY REMOVING THE BONDING STRAP OR SCREW.

b. ALL DISTRIBUTION EQUIPMENT HAS A 10,000 A.I.C FAULT CURRENT RATING AND THE AVAILABLE FAULT CURRENT SHALL BE VERIFIED BY THE CUSTOMER.

c. DO NOT BOND NEUTRAL TO GROUND AT THE GENERATOR.

d. IN ORDER TO COMPLY WITH THE NEC 250.6(A) AND 250.24(A)(1) AND 250.24(A)(5), THERE SHALL ONLY BE ONE NEUTRAL TO GROUND BOND IN THE ELECTRICAL SYSTEM.

e. PROVIDE WARNING SIGN TO BE PLACED BY THE GENERATOR INLET THAT STATES "WARNING: FOR CONNECTION OF A NONSEPARATELY DERIVED (FLOATING NEUTRAL) SYSTEM ONLY." DO NOT BOND NEUTRAL TO GROUND IN GENERATOR.

APPROVED: STATE OF CA - CERTIFIED DAA

Based on the requirements of title 25 California code of regulations
Chapter 3 subchapter 2 Commercial Modular

Date: 04-25-2023 Expires: 07-31-2024

Approval # PFS: 23-002714

THIS APPROVAL DOES NOT AUTHORIZE OR APPROVE ANY OMISSION OR DEVIATION FROM THE REQUIREMENTS OF STATE LAWS OR APPLICABLE LOCAL ORDINANCES . THIS APPROVAL IS LIMITED TO FACTORY-BUILT PORTION ONLY.

PFS CORPORATION - Cottage Grove, WI

AC PANEL SCHEDULE

REVISIONS			
CHG. BY	APPR. BY	DATE	REV

REGISTERED PROFESSIONAL ENGINEER
ALEXANDER TAKAHASHI
E-8508
EXP. 09-30-2024
ELECTRICAL
STATE OF CALIFORNIA

04-24-2023

Alexander Takahashi, P.E.
I certify that these documents were prepared or approved by me, and I am a duly licensed professional engineer under the laws of the State of California.
License No: E8508
Expiration Date: 09/30/24

Site Name(s):
STRAUCH DRIVE
P.O.'s #: 9013484/
AGREEMENT 3002606
VFP Job #: 220742/DWG
Dash #: -001

VFP, INC.
CORPORATE OFFICE
5410 Fallowater Lane
Roanoke, Virginia 24018-0906
(540)977-0500 (540)977-5555 fax
MANUFACTURING FACILITY
540 Industrial Park Road
Duffield, Virginia 24244
(276)431-4000 (276)431-1756 fax

Except as may otherwise be provided by contract, these drawings and concepts are the sole property of VFP, Inc., they are issued in strict confidence, and shall not be reproduced in whole or part without the written permission of VFP, Inc.

DRAWN BY: T.SPIVEY/CMD	DATE: 12/22/22
CHECKED BY:	DATE: 04-24-2023
CHECKED BY:	DATE:

DO NOT SCALE DRAWING

SIZE	CAGE NO	REV
B		-

SCALE: NTS MODEL: 7070

TITLE: 12'0" x 16'0" x 9'1" LIGHTWEIGHT SHELTER

DRAWING NO. 207070

SHEET 5 OF 26

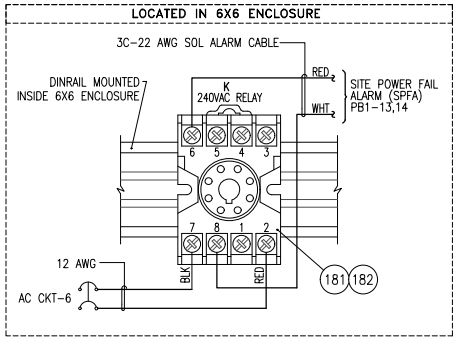

SITE POWER FAIL ALARM WIRING DIAGRAM

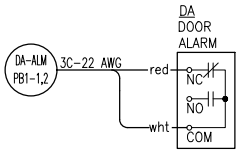

DOOR ENTRY ALARM

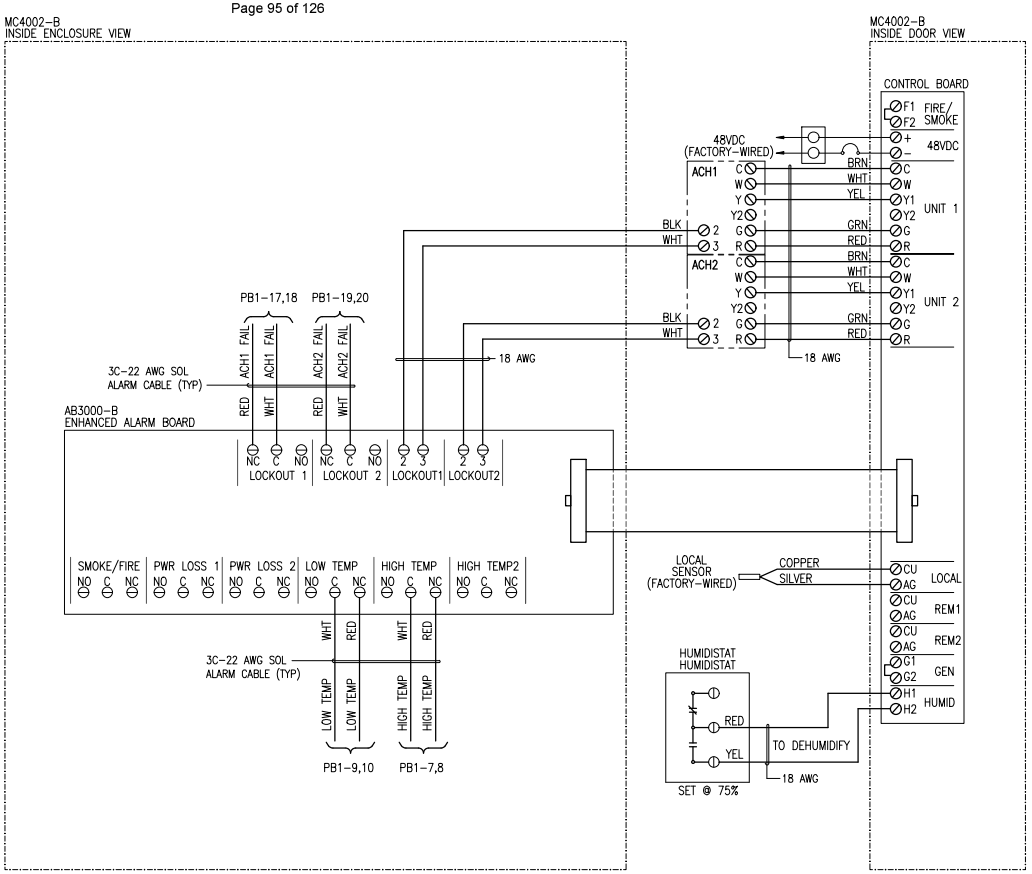

HVAC CONTROLLER

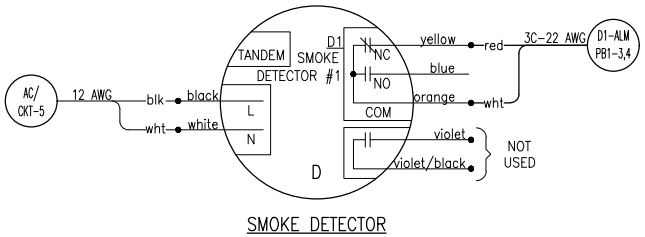

SMOKE DETECTOR

APPROVED: STATE OF CA - CERTIFIED DAA

Based on the requirements of title 25 California code of regulations
Chapter 3 subchapter 2 Commercial Modular

Date: 04-25-2023 Expires: 07-31-2024

Approval # PFS: 23-002714

THIS APPROVAL DOES NOT AUTHORIZE OR APPROVE ANY OMISSION OR DEVIATION FROM THE REQUIREMENTS OF STATE LAWS OR APPLICABLE LOCAL ORDINANCES . THIS APPROVAL IS LIMITED TO FACTORY-BUILT PORTION ONLY.

PFS CORPORATION - Cottage Grove, WI

REVISIONS			
CHG. BY	APPR. BY	DATE	REV

REGISTERED PROFESSIONAL ENGINEER
ALEXANDER TAKAHASHI
E-8508
Exp. 09-30-2024
ELECTRICAL
STATE OF CALIFORNIA

04-10-2023

Alexander Takahashi, P.E.
I certify that these documents were prepared or approved by me, and I am a duly licensed professional engineer under the laws of the State of California.
License No: E8508
Expiration Date: 09/30/24

Site Name(s):
STRAUCH DRIVE
P.O.'s #: 9013484/ AGREEMENT 3002606
VFP Job #: 220742/DWG
Dash #: -001

VFP, INC.
CORPORATE OFFICE
5410 Fallowater Lane
Roanoke, Virginia 24018-0906
(540)977-0500 (540)977-5555 fax
MANUFACTURING FACILITY
540 Industrial Park Road
Duffield, Virginia 24244
(276)431-4000 (276)431-1756 fax

Except as may otherwise be provided by contract, these drawings and concepts are the sole property of VFP, Inc., they are issued in strict confidence, and shall not be reproduced in whole or part without the written permission of VFP, Inc.

DRAWN BY: T.SPIVEY/CMD	DATE: 12/22/22
CHECKED BY:	DATE: 04-10-2023
CHECKED BY:	DATE:
DO NOT SCALE DRAWING	
SIZE: B	CAGE NO: REV: -
SCALE: NTS	MODEL: 7070
TITLE: 12'0" x 16'0" x 9'1" LIGHTWEIGHT SHELTER	
DRAWING NO.: 207070	
SHEET: 6 OF 26	

ALARM & HVAC CONTROLLER WIRING DETAILS

APPROVED: STATE OF CA - CERTIFIED DAA

Based on the requirements of title 25 California code of regulations
Chapter 3 subchapter 2 Commercial Modular

Date: 04-25-2023 Expires: 07-31-2024

Approval # PFS: 23-002714

THIS APPROVAL DOES NOT AUTHORIZE OR APPROVE ANY OMISSION OR DEVIATION FROM THE REQUIREMENTS OF STATE LAWS OR APPLICABLE LOCAL ORDINANCES . THIS APPROVAL IS LIMITED TO FACTORY-BUILT PORTION ONLY.

PFS CORPORATION - Cottage Grove, WI

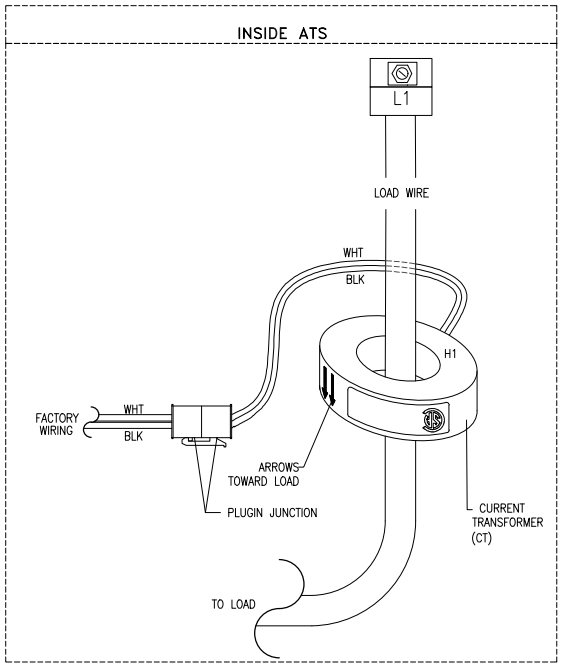

A CURRENT TRANSFORMER DETAIL

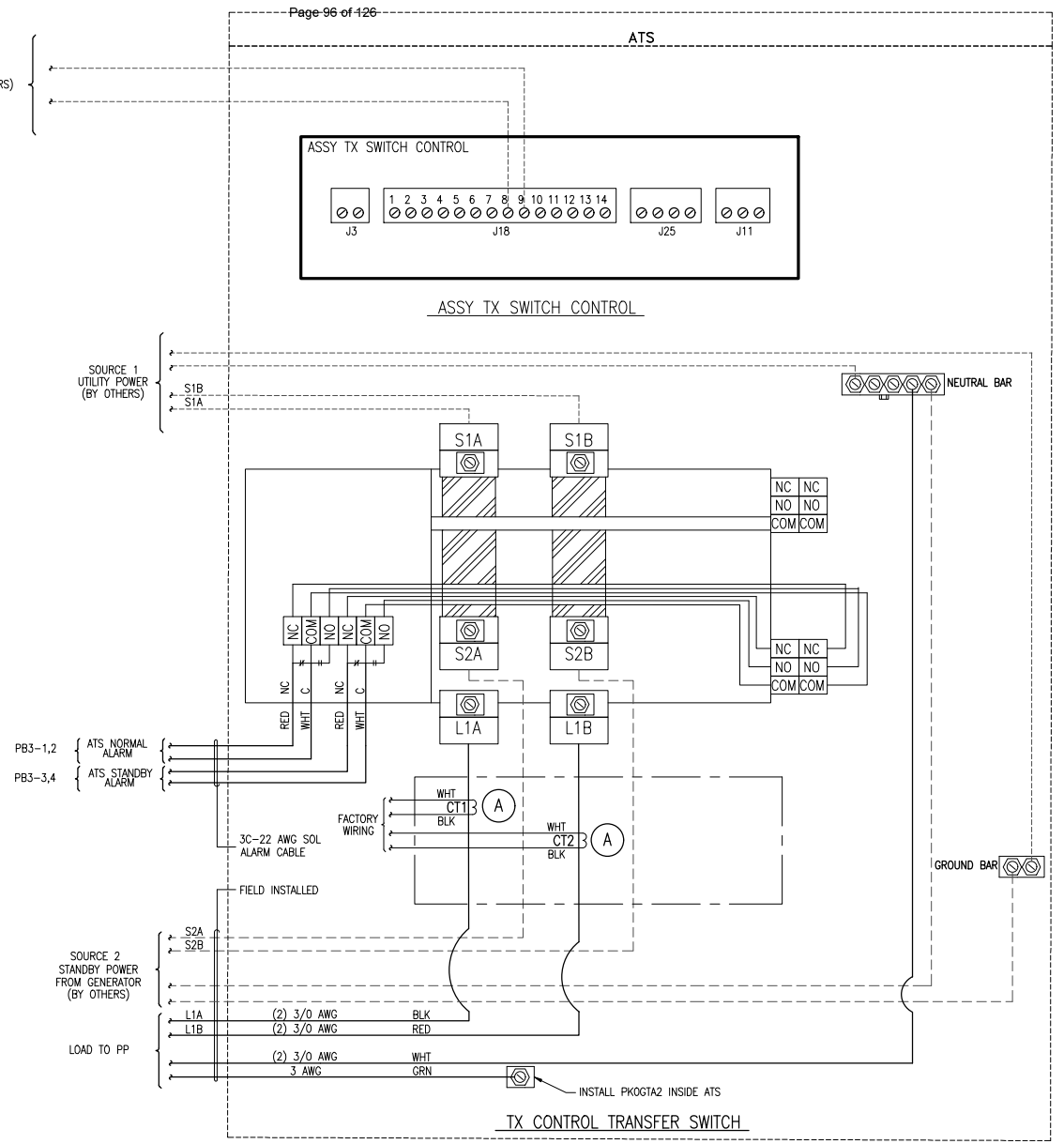

ASSY TX SWITCH CONTROL

TX CONTROL TRANSFER SWITCH

NOTES

A IT IS THE RESPONSIBILITY OF THE FIELD CONTRACTOR TO VERIFY CONNECTION TO EXISTING GENERATOR CONTROL PANEL

ATS WIRING DETAILS

REVISIONS			
CHG. BY	APPR. BY	DATE	REV

REGISTERED PROFESSIONAL ENGINEER ALEXANDER TAKAHASHI E-8508 Exp. 09-30-2024 ELECTRICAL STATE OF CALIFORNIA

04-10-2023

Alexander Takahashi, P.E. I certify that these documents were prepared or approved by me, and I am a duly licensed professional engineer under the laws of the State of California. License No: E8508 Expiration Date: 09/30/24

Site Name(s): STRAUCH DRIVE

P.O.'s #: 9013484/ AGREEMENT 3002606

VFP Job #: 220742/DWG

Dash #: -001

VFP, INC.

CORPORATE OFFICE
5410 Fallowater Lane
Roanoke, Virginia 24018-0906
(540)977-0500 (540)977-5555 fax

MANUFACTURING FACILITY
540 Industrial Park Road
Duffield, Virginia 24244
(276)431-4000 (276)431-1756 fax

Except as may otherwise be provided by contract, these drawings and concepts are the sole property of VFP, Inc., they are issued in strict confidence, and shall not be reproduced in whole or part without the written permission of VFP, Inc.

DRAWN BY: T.SPIVEY/CMD		DATE: 12/22/22
CHECKED BY:		DATE: 04-10-2023
CHECKED BY:		DATE:

DO NOT SCALE DRAWING

SIZE	CAGE NO	REV
B		-

SCALE	MODEL
NTS	7070

TITLE: 12'0" x 16'0" x 9'1" LIGHTWEIGHT SHELTER

DRAWING NO. 207070

SHEET 7 OF 26

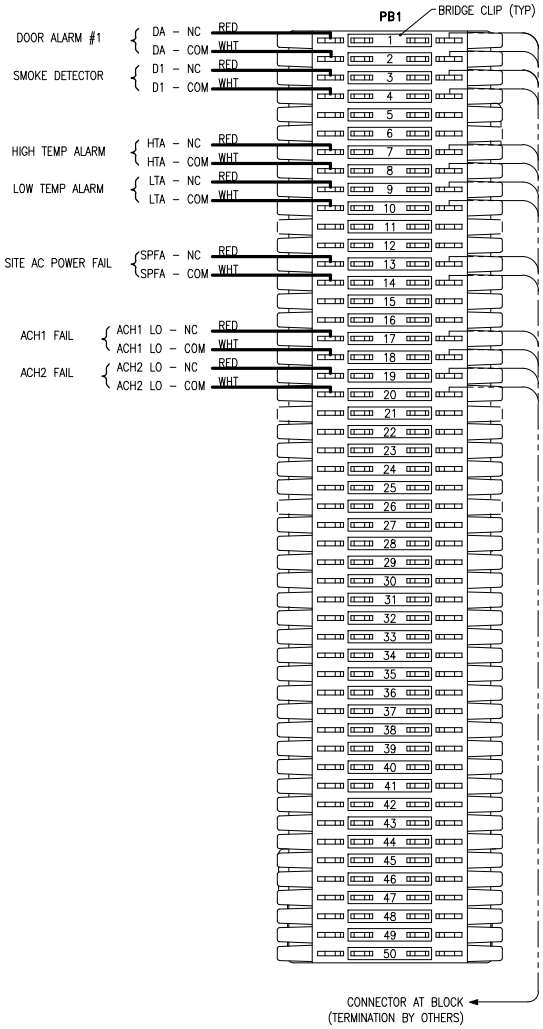

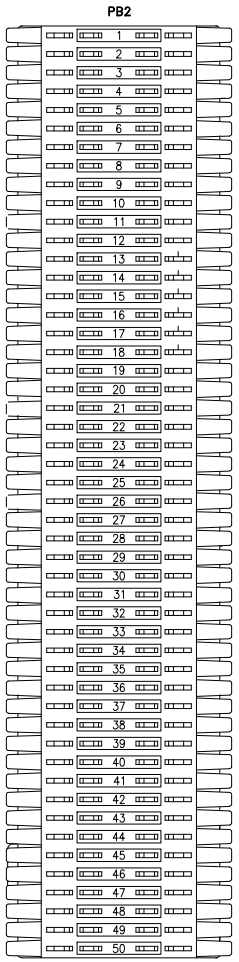

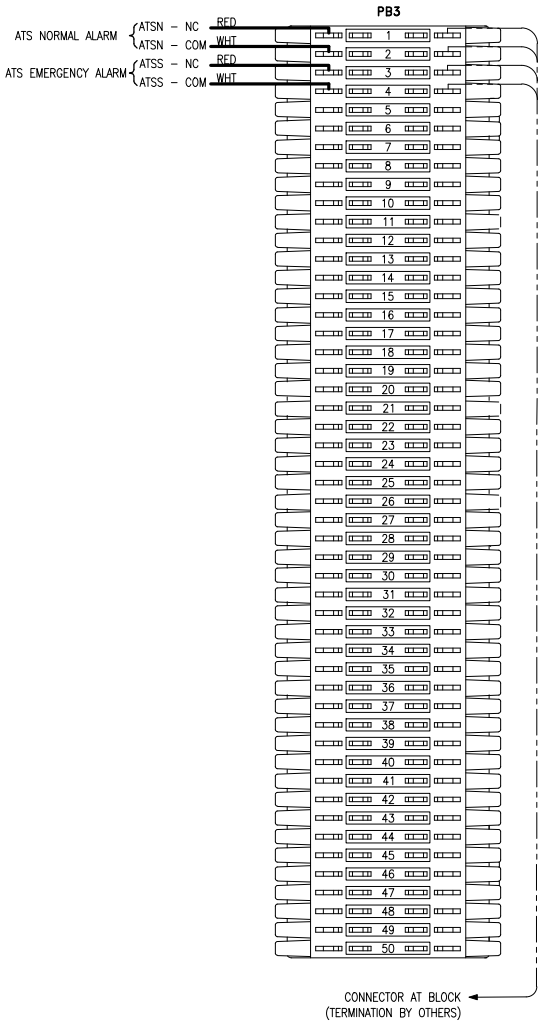

NOTES

1. ALLOW NO MORE THAN A 2" LOOP AT THE END OF EACH PUNCHED DOWN WIRE.
2. INDIVIDUAL WIRES SHALL ENTER THE PUNCH TERMINAL FROM THE TOP SO THAT THE WIRE TAIL POINTS DOWN AFTER PUNCH DOWN.
3. ALL ALARM CABLE TO BE 3C-22 AWG SOL ALARM CABLE (BLK,RED,WHT)

APPROVED: STATE OF CA - CERTIFIED DAA

Based on the requirements of title 25 California code of regulations
Chapter 3 subchapter 2 Commercial Modular

Date: 04-25-2023 Expires: 07-31-2024

Approval # PFS: 23-002714

THIS APPROVAL DOES NOT AUTHORIZE OR APPROVE ANY OMISSION OR DEVIATION FROM THE REQUIREMENTS OF STATE LAWS OR APPLICABLE LOCAL ORDINANCES . THIS APPROVAL IS LIMITED TO FACTORY-BUILT PORTION ONLY.

PFS CORPORATION - Cottage Grove, WI

ALARM PUNCH BLOCK WIRING

REVISIONS			
CHG. BY	APPR. BY	DATE	REV

REGISTERED PROFESSIONAL ENGINEER
ALEXANDER TAKAHASHI
E-8508
Exp. 09-30-2024
ELECTRICAL
STATE OF CALIFORNIA

04-10-2023

Alexander Takahashi, P.E.
I certify that these documents were prepared or approved by me, and I am a duly licensed professional engineer under the laws of the State of California.
License No: E8508
Expiration Date: 09/30/24

Site Name(s):
STRAUCH DRIVE
P.O.'s #: 9013484/
AGREEMENT 3002606
VFP Job #: 220742/DWG
Dash #: -001

VFP, INC.
CORPORATE OFFICE
5410 Fallowater Lane
Roanoke, Virginia 24018-0906
(540)977-0500 (540)977-5555 fax
MANUFACTURING FACILITY
540 Industrial Park Road
Duffield, Virginia 24244
(276)431-4000 (276)431-1756 fax

Except as may otherwise be provided by contract, these drawings and concepts are the sole property of VFP, Inc., they are issued in strict confidence, and shall not be reproduced in whole or part without the written permission of VFP, Inc.

DRAWN BY: T.SPIVEY/CMD	DATE: 12/22/22
CHECKED BY:	DATE: 04-10-2023
CHECKED BY:	DATE:
DO NOT SCALE DRAWING	
SIZE: B	CAGE NO:
REV: -	
SCALE: NTS	MODEL: 7070
TITLE: 12'0" x 16'0" x 9'1" LIGHTWEIGHT SHELTER	
DRAWING NO.: 207070	
SHEET: 8 OF 26	

NOTES

(a) FRONT OF EQUIPMENT IS IDENTIFIED BY RACK IDENTIFICATION LABEL (AS SHOWN ON FLOOR PLAN)

TOLERANCES

ALL DIMENSIONS ARE IN INCHES UNLESS SPECIFIED OTHERWISE

STANDARD:
FRACTIONS ± 1/2"
DECIMALS ± 0.5"
ANGLES ± 3°

IF NOTED WITH SYMBOL ▲:
FRACTIONS ± 1/4"
DECIMALS ± 0.25"
ANGLES ± 1°

IF NOTED WITH SYMBOL ⬣:
FRACTIONS ± 1"
DECIMALS ± 1.0"
ANGLES ± 5°

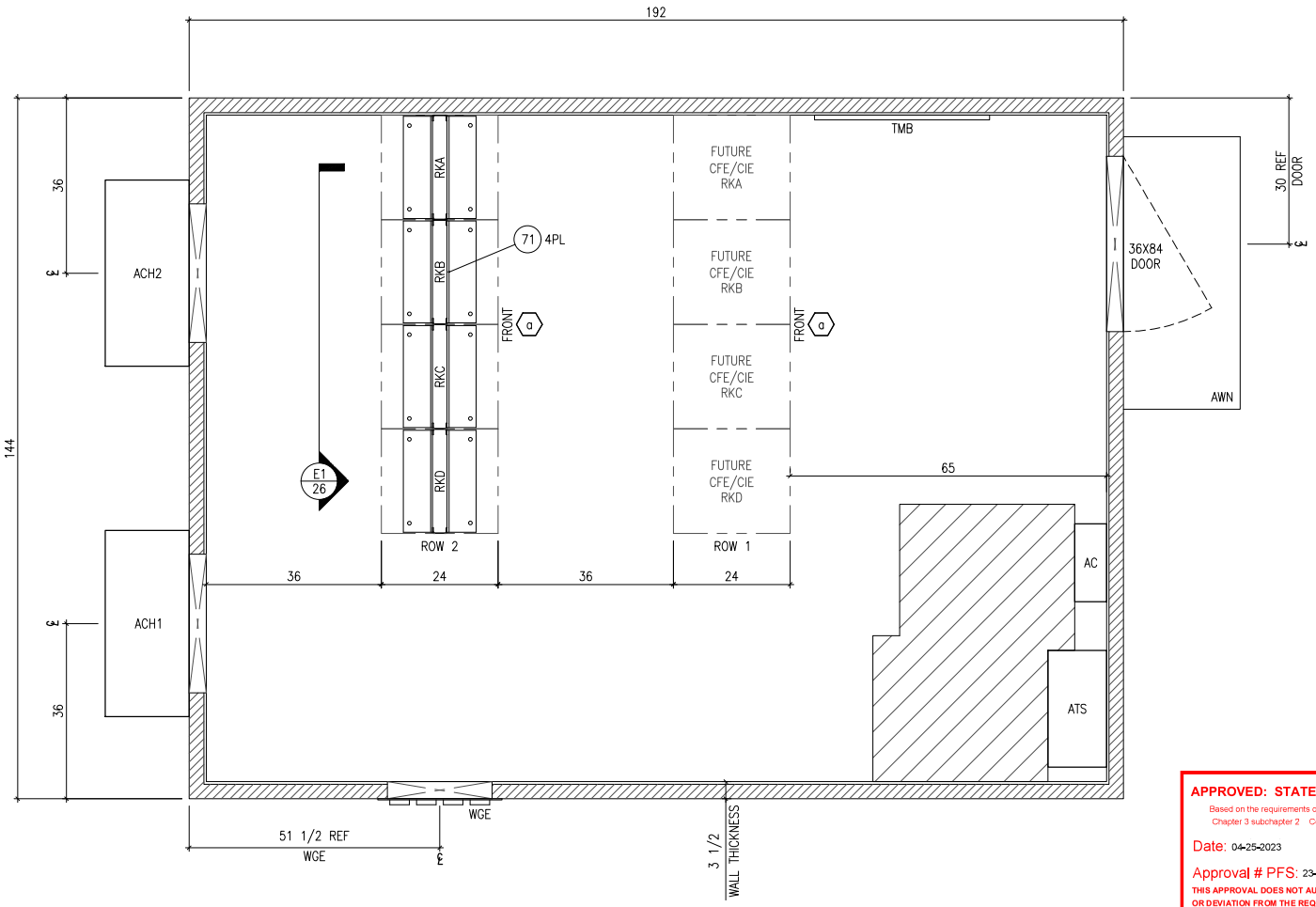

ELEVATION KEY

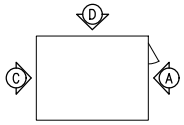

APPROVED: STATE OF CA - CERTIFIED DAA

Based on the requirements of title 25 California code of regulations
Chapter 3 subchapter 2 Commercial Modular

Date: 04-25-2023 Expires: 07-31-2024

Approval # PFS: 23-002714

THIS APPROVAL DOES NOT AUTHORIZE OR APPROVE ANY OMISSION OR DEVIATION FROM THE REQUIREMENTS OF STATE LAWS OR APPLICABLE LOCAL ORDINANCES . THIS APPROVAL IS LIMITED TO FACTORY-BUILT PORTION ONLY.

PFS CORPORATION - Cottage Grove, WI

PLAN VIEW

REVISIONS

CHG. BY	APPR. BY	DATE	REV

REGISTERED PROFESSIONAL ENGINEER
ALEXANDER TAKAHASHI
E-8508
Exp. 09-30-2024
ELECTRICAL
STATE OF CALIFORNIA

04-10-2023

Alexander Takahashi, P.E.
I certify that these documents were prepared or approved by me, and I am a duly licensed professional engineer under the laws of the State of California.
License No: E8508
Expiration Date: 09/30/24

Site Name(s):
STRAUCH DRIVE
P.O.'s #: 9013484/ AGREEMENT 3002606
VFP Job #: 220742/DWG
Dash #: -001

VFP, INC.
CORPORATE OFFICE
5410 Fallowater Lane
Roanoke, Virginia 24018-0906
(540)977-0500 (540)977-5555 fax
MANUFACTURING FACILITY
540 Industrial Park Road
Duffield, Virginia 24244
(276)431-4000 (276)431-1756 fax

Except as may otherwise be provided by contract, these drawings and concepts are the sole property of VFP, Inc., they are issued in strict confidence, and shall not be reproduced in whole or part without the written permission of VFP, Inc.

DRAWN BY	DATE
T.SPIVEY/CMD	12/22/22
CHECKED BY	DATE
	04-10-2023
CHECKED BY	DATE

DO NOT SCALE DRAWING

SIZE	CAGE NO	REV
B		-

SCALE	MODEL
NTS	7070

TITLE
12'0" x 16'0" x 9'1"
LIGHTWEIGHT SHELTER

DRAWING NO.
207070

SHEET
9 OF 26

NOTES

(a) PRE-INSTALL AND REMOVE FOR SHIPPING. DO NOT CAULK. LABEL HOODS, AWNINGS, AND LIGHTING ON BACK SIDE IN PERMANENT MARKER WITH WALL DESIGNATION & DRAWING LABEL (EXAMPLE: A-WALL-FN1)

(b) LOCATION OF THE DATA PLATE AND INSPECTION LABEL.

WARNING

ALL PENETRATIONS, AND (OR) ELECTRICAL DIMENSIONS SHOWN ARE TO BE CONSIDERED FOR REFERENCE ONLY. THE MEASUREMENTS MAY DIFFER, AS A RESULT OF PROPER EQUIPMENT INSTALLATION. PLEASE CONTACT VFP, INC. ENGINEERING FOR PRECISE LOCATIONS.

* ALL PENETRATIONS FOR CIE/CFE EQUIPMENT NEEDED IN THE FIELD SHALL BE THE RESPONSIBILITY OF OTHERS.

TOLERANCES

ALL DIMENSIONS ARE IN INCHES UNLESS SPECIFIED OTHERWISE

STANDARD:	
FRACTIONS	± 1/2"
DECIMALS	± 0.5"
ANGLES	± 3°
IF NOTED WITH SYMBOL: ▲	
FRACTIONS	± 1/4"
DECIMALS	± 0.25"
ANGLES	± 1°
IF NOTED WITH SYMBOL: ⬢	
FRACTIONS	± 1"
DECIMALS	± 1.0"
ANGLES	± 5°

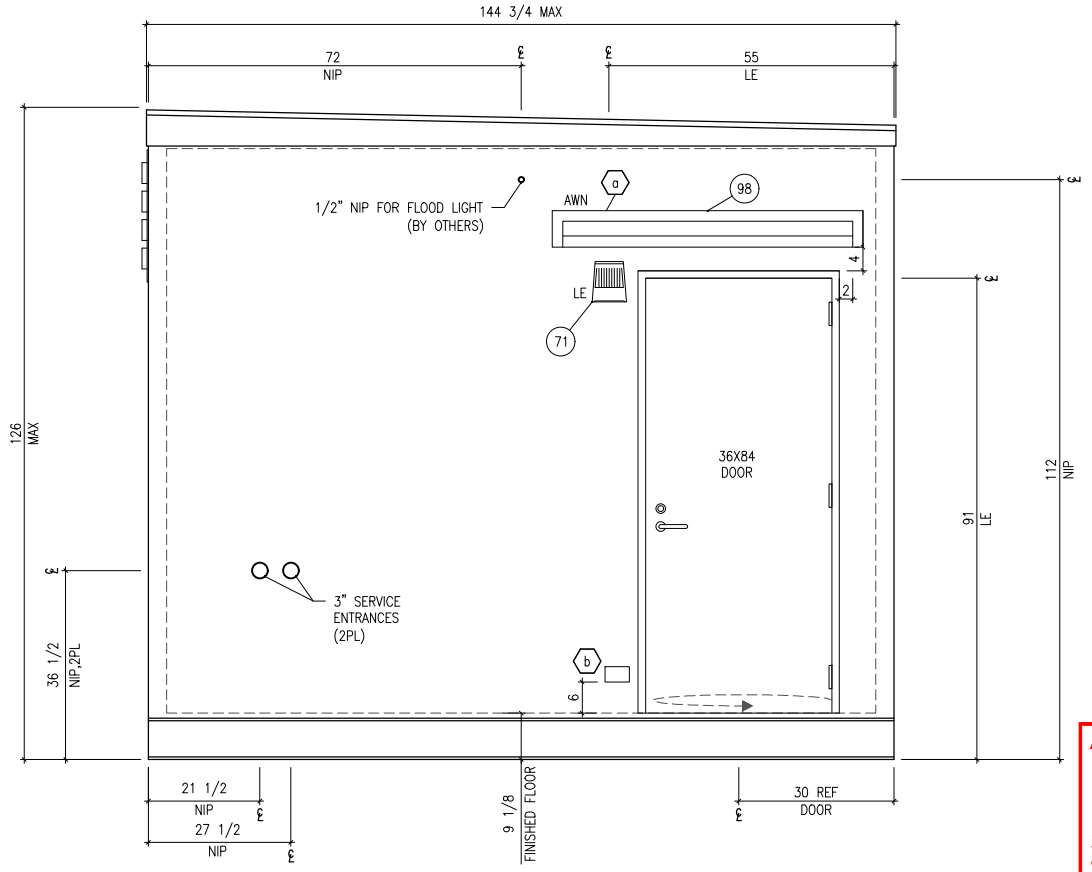

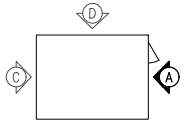

ELEVATION KEY

APPROVED: STATE OF CA - CERTIFIED DAA

Based on the requirements of title 25 California code of regulations
Chapter 3 subchapter 2 Commercial Modular

Date: 04-25-2023 Expires: 07-31-2024

Approval # PFS: 23-002714

THIS APPROVAL DOES NOT AUTHORIZE OR APPROVE ANY OMISSION OR DEVIATION FROM THE REQUIREMENTS OF STATE LAWS OR APPLICABLE LOCAL ORDINANCES . THIS APPROVAL IS LIMITED TO FACTORY-BUILT PORTION ONLY.

PFS CORPORATION - Cottage Grove, WI

EXTERIOR ELEVATION A WALL

REVISIONS			
CHG. BY	APPR. BY	DATE	REV

REGISTERED PROFESSIONAL ENGINEER
ALEXANDER TAKAHASHI
E-8508
Exp. 09-30-2024
ELECTRICAL
STATE OF CALIFORNIA

04-10-2023

Alexander Takahashi, P.E.
I certify that these documents were prepared or approved by me, and I am a duly licensed professional engineer under the laws of the State of California.
License No: E8508
Expiration Date: 09/30/24

Site Name(s):
STRAUCH DRIVE
P.O.'s #: 9013484/
AGREEMENT 3002606
VFP Job #: 220742/DWG
Dash #: -001

VFP, INC.
CORPORATE OFFICE
5410 Fallowater Lane
Roanoke, Virginia 24018-0906
(540)977-0500 (540)977-5555 fax
MANUFACTURING FACILITY
540 Industrial Park Road
Duffield, Virginia 24244
(276)431-4000 (276)431-1756 fax

Except as may otherwise be provided by contract, these drawings and concepts are the sole property of VFP, Inc., they are issued in strict confidence, and shall not be reproduced in whole or part without the written permission of VFP, Inc.

DRAWN BY: T.SPIVEY/CMD	DATE: 12/22/22
CHECKED BY:	DATE: 04-10-2023
CHECKED BY:	DATE:
DO NOT SCALE DRAWING	
SIZE: B	CAGE NO:
REV: -	
SCALE: NTS	MODEL: 7070
TITLE: 12'0" x 16'0" x 9'1" LIGHTWEIGHT SHELTER	
DRAWING NO.: 207070	
SHEET: 10 OF 26	

NOTES

(a) CENTER OVER OPENING UNLESS OTHERWISE INSTRUCTED.

WARNING

ALL PENETRATIONS, AND (OR) ELECTRICAL DIMENSIONS SHOWN ARE TO BE CONSIDERED FOR REFERENCE ONLY. THE MEASUREMENTS MAY DIFFER, AS A RESULT OF PROPER EQUIPMENT INSTALLATION. PLEASE CONTACT VFP, INC. ENGINEERING FOR PRECISE LOCATIONS.

* ALL PENETRATIONS FOR CIE/CFE EQUIPMENT NEEDED IN THE FIELD SHALL BE THE RESPONSIBILITY OF OTHERS.

TOLERANCES

ALL DIMENSIONS ARE IN INCHES
UNLESS SPECIFIED OTHERWISE

STANDARD:
FRACTIONS ± 1/2"
DECIMALS ± 0.5"
ANGLES ± 3°

IF NOTED WITH SYMBOL: ▲
FRACTIONS ± 1/4"
DECIMALS ± 0.25"
ANGLES ± 1°

IF NOTED WITH SYMBOL: ⬢
FRACTIONS ± 1"
DECIMALS ± 1.0"
ANGLES ± 5°

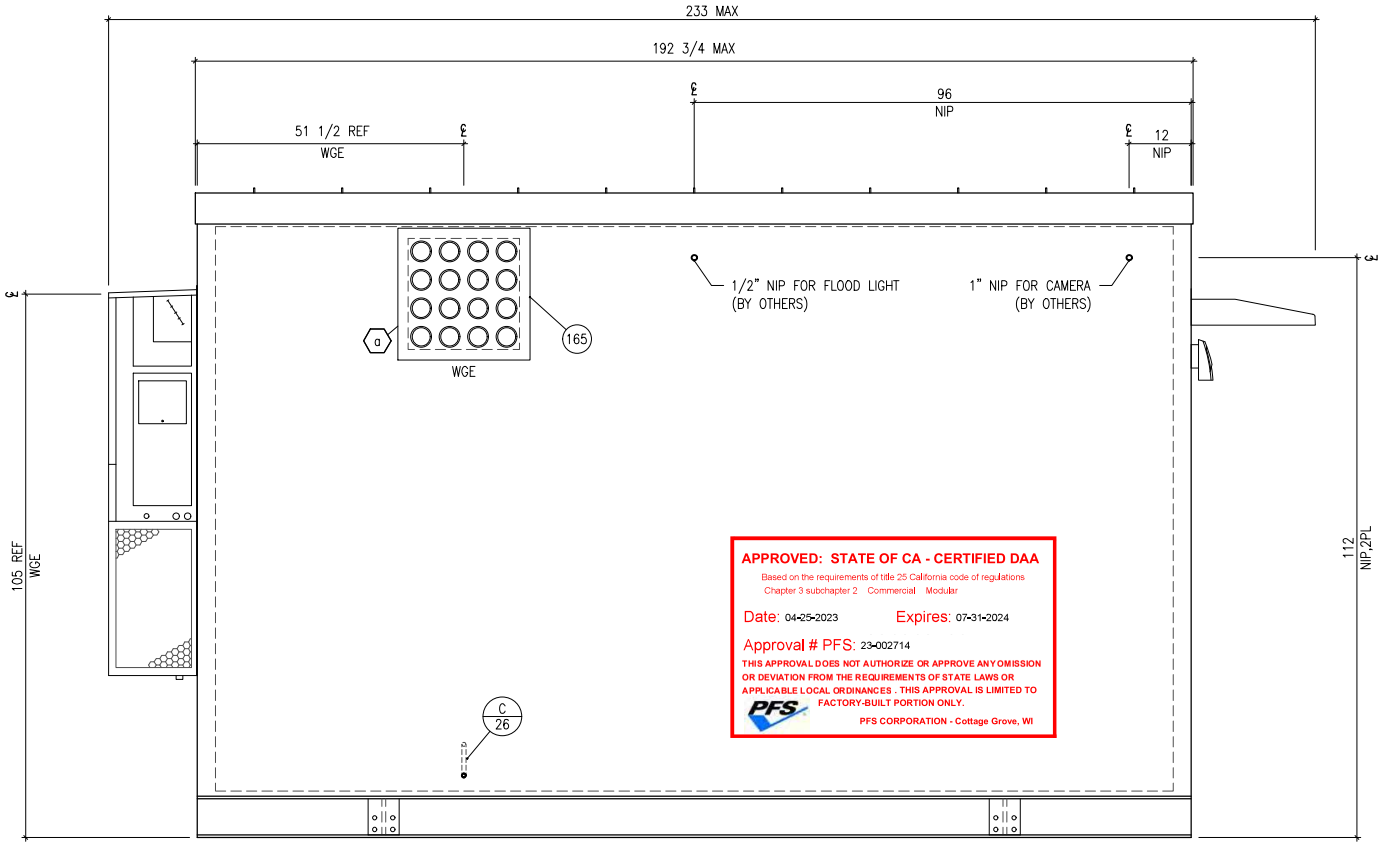

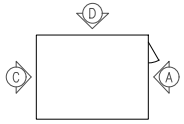

ELEVATION KEY

EXTERIOR ELEVATION B WALL

REVISIONS

CHG. BY	APPR. BY	DATE	REV

REGISTERED PROFESSIONAL ENGINEER
ALEXANDER TAKAHASHI
E-8508
Exp. 09-30-2024
ELECTRICAL
STATE OF CALIFORNIA

04-10-2023

Alexander Takahashi, P.E.
I certify that these documents were prepared or approved by me, and I am a duly licensed professional engineer under the laws of the State of California.
License No: E8508
Expiration Date: 09/30/24

Site Name(s):
STRAUCH DRIVE
P.O.'s #: 9013484/
AGREEMENT 3002606
VFP Job #: 220742/DWG
Dash #: -001

VFP, INC.
CORPORATE OFFICE
5410 Fallowater Lane
Roanoke, Virginia 24018-0906
(540)977-0500 (540)977-5555 fax
MANUFACTURING FACILITY
540 Industrial Park Road
Duffield, Virginia 24244
(276)431-4000 (276)431-1756 fax

Except as may otherwise be provided by contract, these drawings and concepts are the sole property of VFP, Inc., they are issued in strict confidence, and shall not be reproduced in whole or part without the written permission of VFP, Inc.

DRAWN BY: T.SPIVEY/CMD	DATE: 12/22/22
CHECKED BY:	DATE: 04-10-2023
CHECKED BY:	DATE:

DO NOT SCALE DRAWING

SIZE	CAGE NO	REV
B		-

SCALE	MODEL
NTS	7070

TITLE: 12'0" x 16'0" x 9'1" LIGHTWEIGHT SHELTER

DRAWING NO.: 207070

SHEET: 11 OF 26

WARNING

ALL PENETRATIONS, AND (OR) ELECTRICAL DIMENSIONS SHOWN ARE TO BE CONSIDERED FOR REFERENCE ONLY. THE MEASUREMENTS MAY DIFFER, AS A RESULT OF PROPER EQUIPMENT INSTALLATION. PLEASE CONTACT VFP, INC. ENGINEERING FOR PRECISE LOCATIONS.

* ALL PENETRATIONS FOR CIE/CFE EQUIPMENT NEEDED IN THE FIELD SHALL BE THE RESPONSIBILITY OF OTHERS.

TOLERANCES

ALL DIMENSIONS ARE IN INCHES
UNLESS SPECIFIED OTHERWISE
STANDARD:
FRACTIONS ± 1/2"
DECIMALS ± 0.5"
ANGLES ± 3°
IF NOTED WITH SYMBOL: ▲
FRACTIONS ± 1/4"
DECIMALS ± 0.25"
ANGLES ± 1°
IF NOTED WITH SYMBOL: ⬣
FRACTIONS ± 1"
DECIMALS ± 1.0"
ANGLES ± 5°

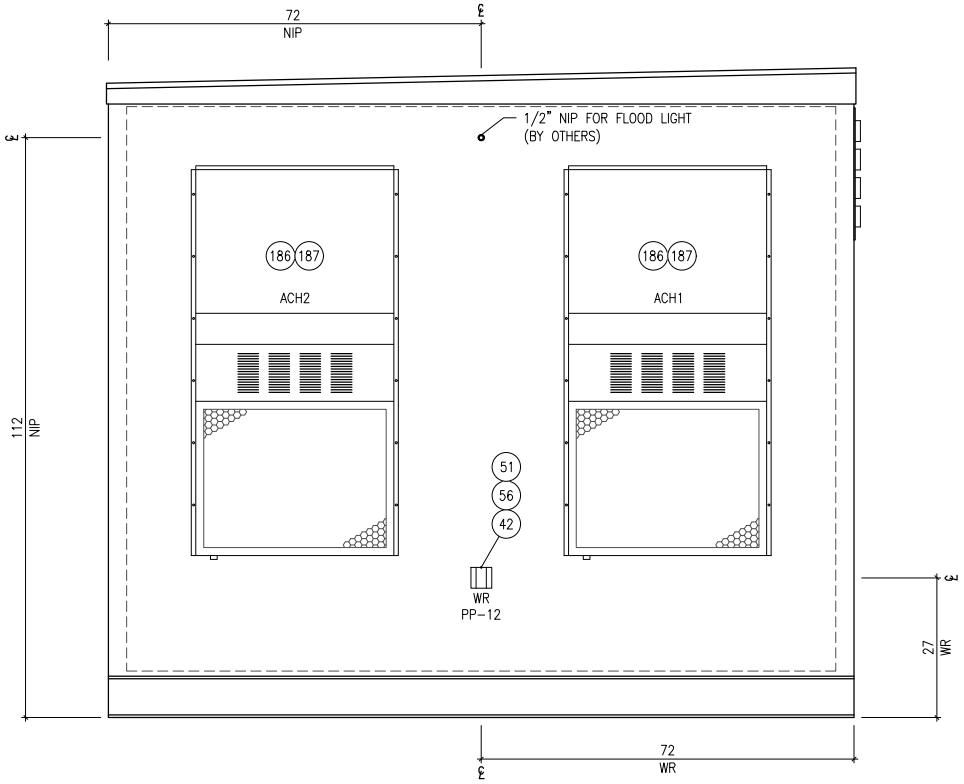

APPROVED: STATE OF CA - CERTIFIED DAA

Based on the requirements of title 25 California code of regulations
Chapter 3 subchapter 2 Commercial Modular

Date: 04-25-2023 Expires: 07-31-2024

Approval # PFS: 23-002714

THIS APPROVAL DOES NOT AUTHORIZE OR APPROVE ANY OMISSION OR DEVIATION FROM THE REQUIREMENTS OF STATE LAWS OR APPLICABLE LOCAL ORDINANCES . THIS APPROVAL IS LIMITED TO FACTORY-BUILT PORTION ONLY.

PFS CORPORATION - Cottage Grove, WI

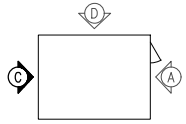

ELEVATION KEY

EXTERIOR ELEVATION C WALL

REVISIONS			
CHG. BY	APPR. BY	DATE	REV

REGISTERED PROFESSIONAL ENGINEER
ALEXANDER TAKAHASHI
E-8508
Exp. 09-30-2024
ELECTRICAL
STATE OF CALIFORNIA

04-10-2023

Alexander Takahashi, P.E.
I certify that these documents were prepared or approved by me, and I am a duly licensed professional engineer under the laws of the State of California.
License No: E8508
Expiration Date: 0930/24

Site Name(s):
STRAUCH DRIVE
P.O.'s #: 9013484/
AGREEMENT 3002606
VFP Job #: 220742/DWG
Dash #: -001

VFP, INC.
CORPORATE OFFICE
5410 Fallowater Lane
Roanoke, Virginia 24018-0906
(540)977-0500 (540)977-5555 fax
MANUFACTURING FACILITY
540 Industrial Park Road
Duffield, Virginia 24244
(276)431-4000 (276)431-1756 fax

Except as may otherwise be provided by contract, these drawings and concepts are the sole property of VFP, Inc., they are issued in strict confidence, and shall not be reproduced in whole or part without the written permission of VFP, Inc.

DRAWN BY	DATE
T.SPIVEY/CMD	12/22/22
CHECKED BY	DATE
	04-10-2023
CHECKED BY	DATE

DO NOT SCALE DRAWING

SIZE	CAGE NO	REV
B		-

SCALE	MODEL
NTS	7070

TITLE
12'0" x 16'0" x 9'1"
LIGHTWEIGHT SHELTER

DRAWING NO.
207070

SHEET
12 OF 26

WARNING

ALL PENETRATIONS, AND (OR) ELECTRICAL DIMENSIONS SHOWN ARE TO BE CONSIDERED FOR REFERENCE ONLY. THE MEASUREMENTS MAY DIFFER, AS A RESULT OF PROPER EQUIPMENT INSTALLATION. PLEASE CONTACT VFP, INC. ENGINEERING FOR PRECISE LOCATIONS.

* ALL PENETRATIONS FOR CIE/CFE EQUIPMENT NEEDED IN THE FIELD SHALL BE THE RESPONSIBILITY OF OTHERS.

APPROVED: STATE OF CA - CERTIFIED DAA

Based on the requirements of title 25 California code of regulations
Chapter 3 subchapter 2 Commercial Modular

Date: 04-25-2023 Expires: 07-31-2024

Approval # PFS: 23-002714

THIS APPROVAL DOES NOT AUTHORIZE OR APPROVE ANY OMISSION OR DEVIATION FROM THE REQUIREMENTS OF STATE LAWS OR APPLICABLE LOCAL ORDINANCES . THIS APPROVAL IS LIMITED TO FACTORY-BUILT PORTION ONLY.

PFS CORPORATION - Cottage Grove, WI

TOLERANCES

ALL DIMENSIONS ARE IN INCHES
UNLESS SPECIFIED OTHERWISE

STANDARD:		
	FRACTIONS	± 1/2"
	DECIMALS	± 0.5"
	ANGLES	± 3°
IF NOTED WITH SYMBOL:		
▲	FRACTIONS	± 1/4"
	DECIMALS	± 0.25"
	ANGLES	± 1°
IF NOTED WITH SYMBOL:		
⬣	FRACTIONS	± 1"
	DECIMALS	± 1.0"
	ANGLES	± 5°

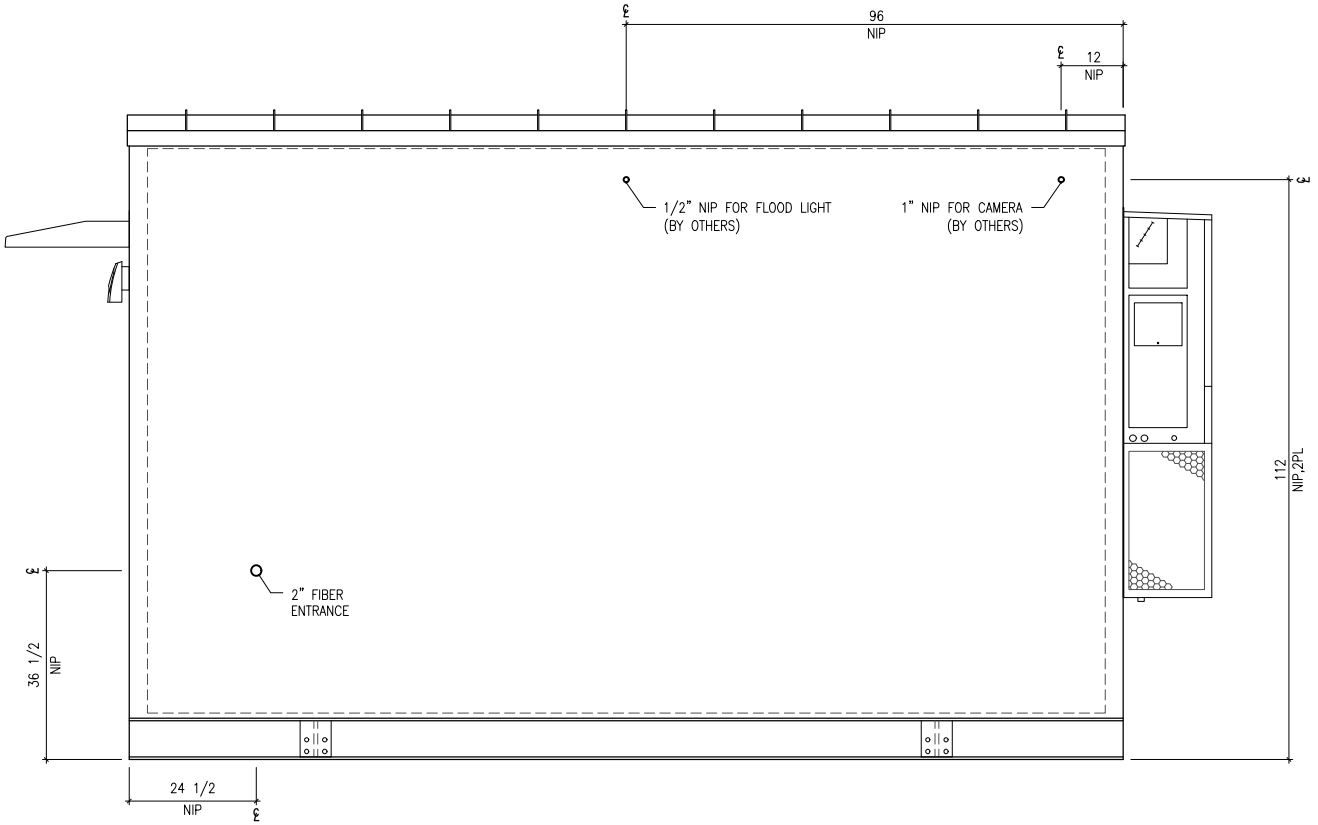

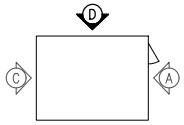

ELEVATION KEY

EXTERIOR ELEVATION D WALL

REVISIONS			
CHG. BY	APPR. BY	DATE	REV

REGISTERED PROFESSIONAL ENGINEER
ALEXANDER TAKAHASHI
E-8508
Exp. 09-30-2024
ELECTRICAL
STATE OF CALIFORNIA

04-10-2023

Alexander Takahashi, P.E.
I certify that these documents were prepared or approved by me, and I am a duly licensed professional engineer under the laws of the State of California.
License No: E8508
Expiration Date: 09/30/24

Site Name(s):
STRAUCH DRIVE
P.O.'s #: 9013484/
AGREEMENT 3002606
VFP Job #: 220742/DWG
Dash #: -001

VFP, INC.
CORPORATE OFFICE
5410 Fallowater Lane
Roanoke, Virginia 24018-0906
(540)977-0500 (540)977-5555 fax
MANUFACTURING FACILITY
540 Industrial Park Road
Duffield, Virginia 24244
(276)431-4000 (276)431-1756 fax

Except as may otherwise be provided by contract, these drawings and concepts are the sole property of VFP, Inc., they are issued in strict confidence, and shall not be reproduced in whole or part without the written permission of VFP, Inc.

DRAWN BY: T.SPIVEY/CMD		DATE: 12/22/22
CHECKED BY:		DATE: 04-10-2023
CHECKED BY:		DATE:
DO NOT SCALE DRAWING		
SIZE: B	CAGE NO:	REV: -
SCALE: NTS	MODEL: 7070	

TITLE: 12'0" x 16'0" x 9'1" LIGHTWEIGHT SHELTER

DRAWING NO.: 207070

SHEET: 13 OF 26

NOTES

a. ALL CONDUIT SHALL HAVE COMPRESSION TYPE FITTINGS.

APPROVED: STATE OF CA - CERTIFIED DAA
Based on the requirements of title 25 California code of regulations
Chapter 3 subchapter 2 Commercial Modular
Date: 04-25-2023 Expires: 07-31-2024
Approval # PFS: 23-002714
THIS APPROVAL DOES NOT AUTHORIZE OR APPROVE ANY OMISSION OR DEVIATION FROM THE REQUIREMENTS OF STATE LAWS OR APPLICABLE LOCAL ORDINANCES . THIS APPROVAL IS LIMITED TO FACTORY-BUILT PORTION ONLY.
PFS CORPORATION - Cottage Grove, WI

TOLERANCES

ALL DIMENSIONS ARE IN INCHES UNLESS SPECIFIED OTHERWISE
STANDARD:
FRACTIONS ± 1/2"
DECIMALS ± 0.5"
ANGLES ± 3°
IF NOTED WITH SYMBOL: ▲
FRACTIONS ± 1/4"
DECIMALS ± 0.25"
ANGLES ± 1°
IF NOTED WITH SYMBOL: ⬢
FRACTIONS ± 1"
DECIMALS ± 1.0"
ANGLES ± 5°

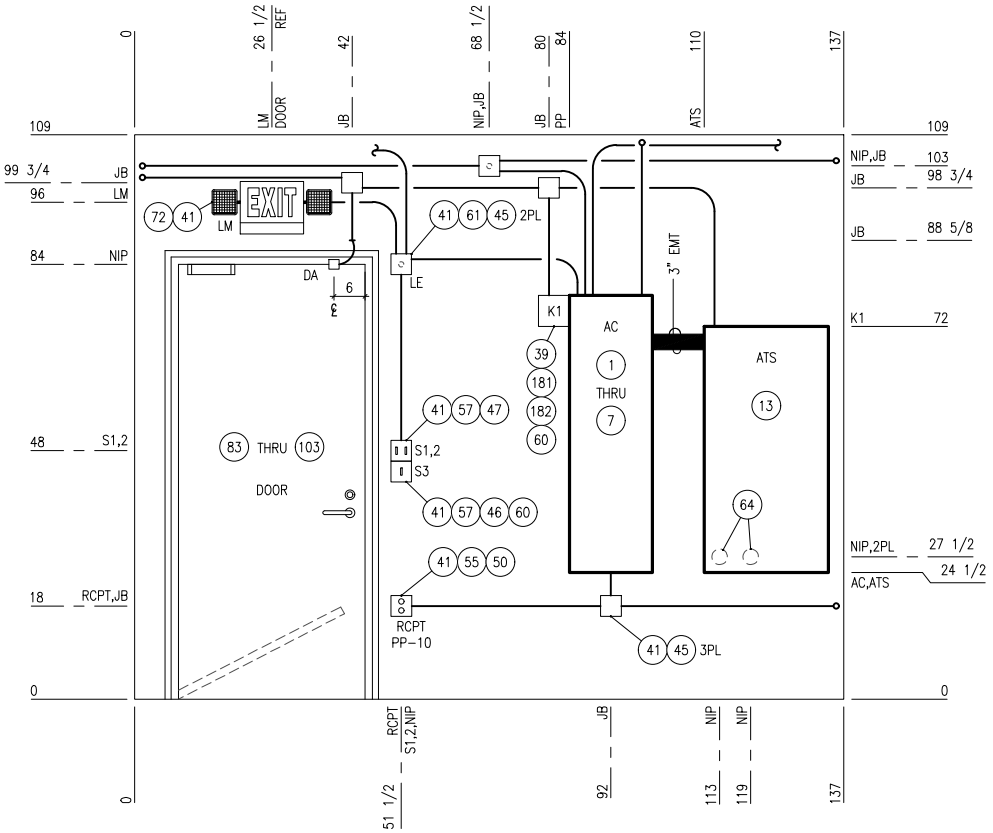

ELEVATION KEY

VFP, Inc. Corporate Office: 5410 Fallowater Lane; Roanoke, VA 24018/ Manufacturing Facility: 402 Industrial Park Road; Duffield, VA 24244

INTERIOR ELEVATION A WALL

REVISIONS			
CHG. BY	APPR. BY	DATE	REV

REGISTERED PROFESSIONAL ENGINEER
ALEXANDER TAKAHASHI
E-8508
Exp. 09-30-2024
ELECTRICAL
STATE OF CALIFORNIA

04-10-2023

Alexander Takahashi, P.E.
I certify that these documents were prepared or approved by me, and I am a duly licensed professional engineer under the laws of the State of California.
License No: E8508
Expiration Date: 09/30/24

Site Name(s):
STRAUCH DRIVE
P.O.'s #: 9013484/ AGREEMENT 3002606
VFP Job #: 220742/DWG
Dash #: -001

VFP, INC.
CORPORATE OFFICE
5410 Fallowater Lane
Roanoke, Virginia 24018-0906
(540)977-0500 (540)977-5555 fax
MANUFACTURING FACILITY
540 Industrial Park Road
Duffield, Virginia 24244
(276)431-4000 (276)431-1756 fax

Except as may otherwise be provided by contract, these drawings and concepts are the sole property of VFP, Inc., they are issued in strict confidence, and shall not be reproduced in whole or part without the written permission of VFP, Inc.

DRAWN BY: T.SPIVEY/CMD	DATE: 12/22/22
CHECKED BY:	DATE: 04-10-2023
CHECKED BY:	DATE:
DO NOT SCALE DRAWING	
SIZE: B	CAGE NO:
REV: -	
SCALE: NTS	MODEL: 7070
TITLE: 12'0" x 16'0" x 9'1" LIGHTWEIGHT SHELTER	
DRAWING NO.: 207070	
SHEET: 14 OF 26	

NOTES

a. ALL CONDUIT SHALL HAVE COMPRESSION TYPE FITTINGS

APPROVED: STATE OF CA - CERTIFIED DAA

Based on the requirements of title 25 California code of regulations
Chapter 3 subchapter 2 Commercial Modular

Date: 04-25-2023 Expires: 07-31-2024

Approval # PFS: 23-002714

THIS APPROVAL DOES NOT AUTHORIZE OR APPROVE ANY OMISSION OR DEVIATION FROM THE REQUIREMENTS OF STATE LAWS OR APPLICABLE LOCAL ORDINANCES . THIS APPROVAL IS LIMITED TO FACTORY-BUILT PORTION ONLY.

PFS CORPORATION - Cottage Grove, WI

TOLERANCES

ALL DIMENSIONS ARE IN INCHES
UNLESS SPECIFIED OTHERWISE
STANDARD:
FRACTIONS ± 1/2"
DECIMALS ± 0.5"
ANGLES ± 3°
IF NOTED WITH SYMBOL: ▲
FRACTIONS ± 1/4"
DECIMALS ± 0.25"
ANGLES ± 1°
IF NOTED WITH SYMBOL: ⬣
FRACTIONS ± 1"
DECIMALS ± 1.0"
ANGLES ± 5°

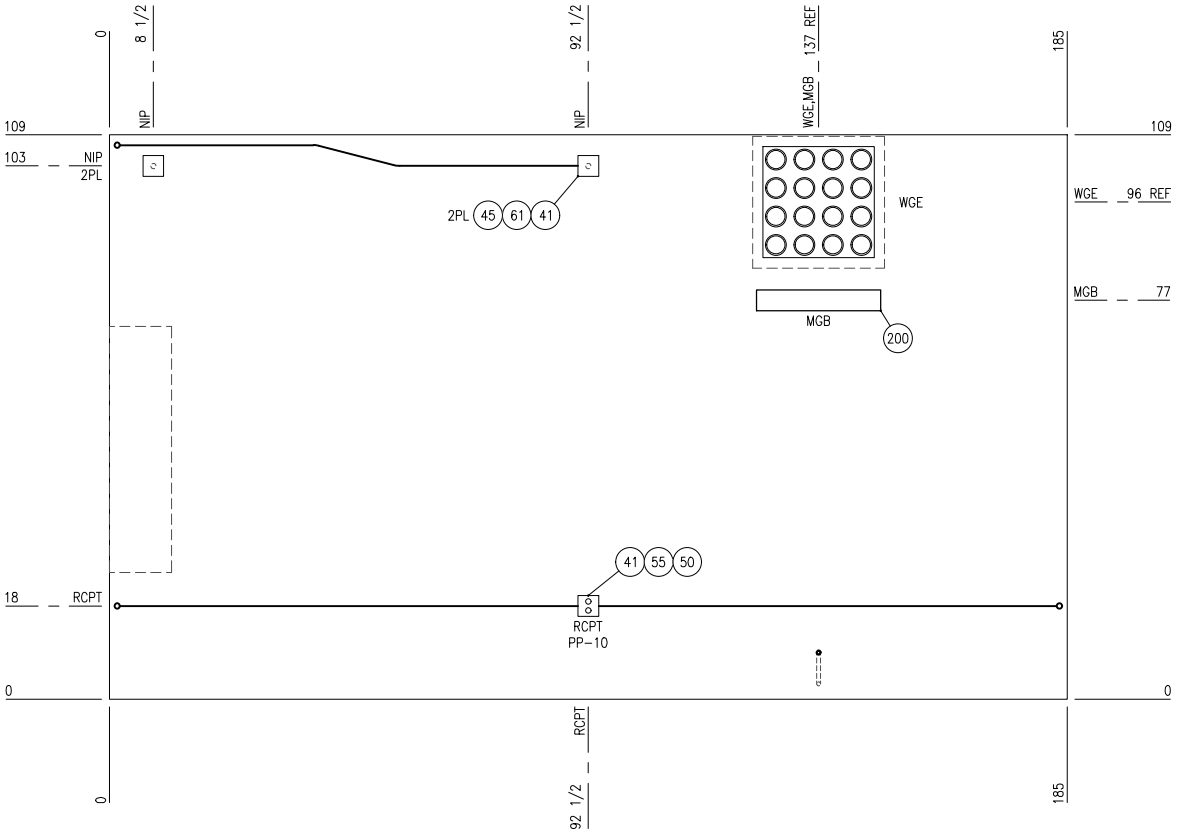

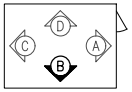

ELEVATION KEY

INTERIOR ELEVATION B WALL

REVISIONS			
CHG. BY	APPR. BY	DATE	REV

REGISTERED PROFESSIONAL ENGINEER
ALEXANDER TAKAHASHI
E-8508
Exp. 09-30-2024
ELECTRICAL
STATE OF CALIFORNIA

04-10-2023

Alexander Takahashi, P.E.
I certify that these documents were prepared or approved by me, and I am a duly licensed professional engineer under the laws of the State of California.
License No: E8508
Expiration Date: 09/30/24

Site Name(s):
STRAUCH DRIVE
P.O.'s #: 9013484/ AGREEMENT 3002606
VFP Job #: 220742/DWG
Dash #: -001

VFP, INC.
CORPORATE OFFICE
5410 Fallowater Lane
Roanoke, Virginia 24018-0906
(540)977-0500 (540)977-5555 fax
MANUFACTURING FACILITY
540 Industrial Park Road
Duffield, Virginia 24244
(276)431-4000 (276)431-1756 fax

Except as may otherwise be provided by contract, these drawings and concepts are the sole property of VFP, Inc., they are issued in strict confidence, and shall not be reproduced in whole or part without the written permission of VFP, Inc.

DRAWN BY: T.SPIVEY/CMD	DATE: 12/22/22
CHECKED BY:	DATE: 04-10-2023
CHECKED BY:	DATE:
DO NOT SCALE DRAWING	
SIZE: B	CAGE NO:
REV: -	
SCALE: NTS	MODEL: 7070
TITLE: 12'0" x 16'0" x 9'1" LIGHTWEIGHT SHELTER	
DRAWING NO.: 207070	
SHEET: 15 OF 26	

NOTES

a. ALL CONDUIT SHALL HAVE COMPRESSION TYPE FITTINGS

APPROVED: STATE OF CA - CERTIFIED DAA

Based on the requirements of title 25 California code of regulations
Chapter 3 subchapter 2 Commercial Modular

Date: 04-25-2023 Expires: 07-31-2024

Approval # PFS: 23-002714

THIS APPROVAL DOES NOT AUTHORIZE OR APPROVE ANY OMISSION OR DEVIATION FROM THE REQUIREMENTS OF STATE LAWS OR APPLICABLE LOCAL ORDINANCES . THIS APPROVAL IS LIMITED TO FACTORY-BUILT PORTION ONLY.

PFS CORPORATION - Cottage Grove, WI

TOLERANCES

ALL DIMENSIONS ARE IN INCHES
UNLESS SPECIFIED OTHERWISE

STANDARD:
FRACTIONS ± 1/2"
DECIMALS ± 0.5"
ANGLES ± 3°

IF NOTED WITH SYMBOL: ▲
FRACTIONS ± 1/4"
DECIMALS ± 0.25"
ANGLES ± 1°

IF NOTED WITH SYMBOL: ⬢
FRACTIONS ± 1"
DECIMALS ± 1.0"
ANGLES ± 5°

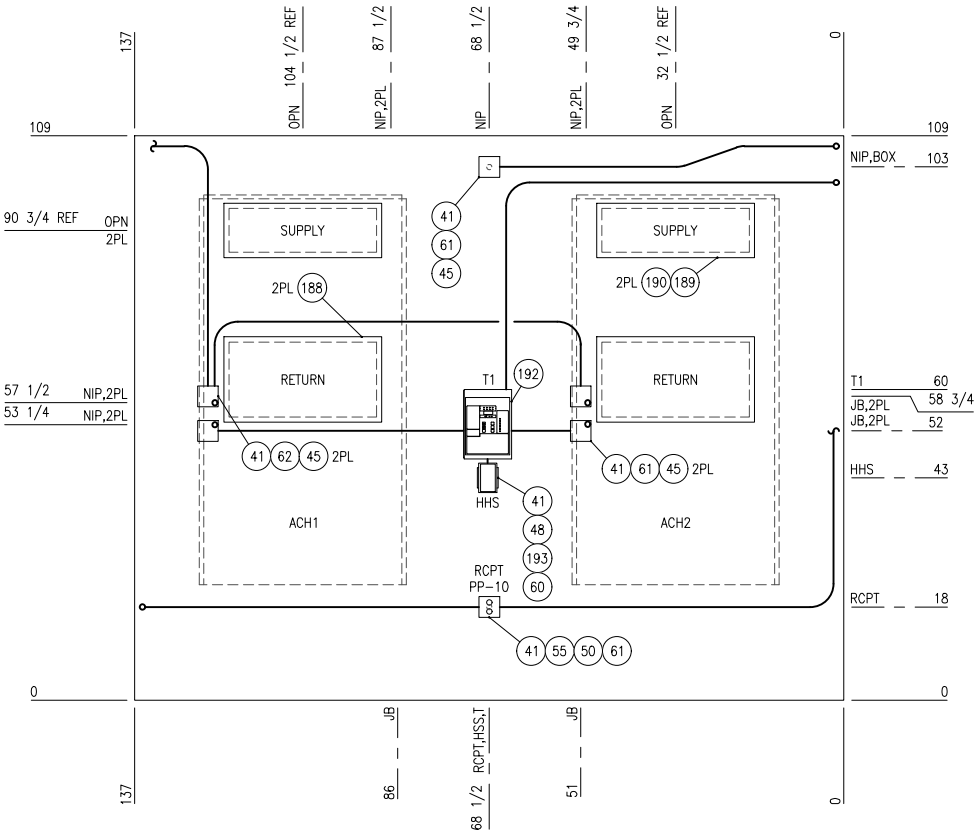

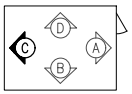

ELEVATION KEY

INTERIOR ELEVATION C WALL

REVISIONS			
CHG. BY	APPR. BY	DATE	REV

REGISTERED PROFESSIONAL ENGINEER
ALEXANDER TAKAHASHI
E-8508
Exp. 09-30-2024
ELECTRICAL
STATE OF CALIFORNIA

04-10-2023

Alexander Takahashi, P.E.
I certify that these documents were prepared or approved by me, and I am a duly licensed professional engineer under the laws of the State of California.
License No: E8508
Expiration Date: 09/30/24

Site Name(s):
STRAUCH DRIVE
P.O.'s #: 9013484/
AGREEMENT 3002606
VFP Job #: 220742/DWG
Dash #: -001

VFP, INC.
CORPORATE OFFICE
5410 Fallowater Lane
Roanoke, Virginia 24018-0906
(540)977-0500 (540)977-5555 fax
MANUFACTURING FACILITY
540 Industrial Park Road
Duffield, Virginia 24244
(276)431-4000 (276)431-1756 fax

Except as may otherwise be provided by contract, these drawings and concepts are the sole property of VFP, Inc., they are issued in strict confidence, and shall not be reproduced in whole or part without the written permission of VFP, Inc.

DRAWN BY: T.SPIVEY/CMD	DATE: 12/22/22
CHECKED BY:	DATE: 04-10-2023
CHECKED BY:	DATE:
DO NOT SCALE DRAWING	
SIZE: B	CAGE NO:	REV: -
SCALE: NTS	MODEL: 7070
TITLE: 12'0" x 16'0" x 9'1" LIGHTWEIGHT SHELTER	
DRAWING NO.: 207070	
SHEET: 16 OF 26	

NOTES

a. ALL CONDUIT SHALL HAVE COMPRESSION TYPE FITTINGS

APPROVED: STATE OF CA - CERTIFIED DAA

Based on the requirements of title 25 California code of regulations
Chapter 3 subchapter 2 Commercial Modular

Date: 04-25-2023 Expires: 07-31-2024

Approval # PFS: 23-002714

THIS APPROVAL DOES NOT AUTHORIZE OR APPROVE ANY OMISSION OR DEVIATION FROM THE REQUIREMENTS OF STATE LAWS OR APPLICABLE LOCAL ORDINANCES . THIS APPROVAL IS LIMITED TO FACTORY-BUILT PORTION ONLY.

PFS CORPORATION - Cottage Grove, WI

TOLERANCES

ALL DIMENSIONS ARE IN INCHES
UNLESS SPECIFIED OTHERWISE

STANDARD:		
	FRACTIONS	± 1/2"
	DECIMALS	± 0.5"
	ANGLES	± 3°
IF NOTED WITH SYMBOL:		
▲	FRACTIONS	± 1/4"
	DECIMALS	± 0.25"
	ANGLES	± 1°
IF NOTED WITH SYMBOL:		
⬣	FRACTIONS	± 1"
	DECIMALS	± 1.0"
	ANGLES	± 5°

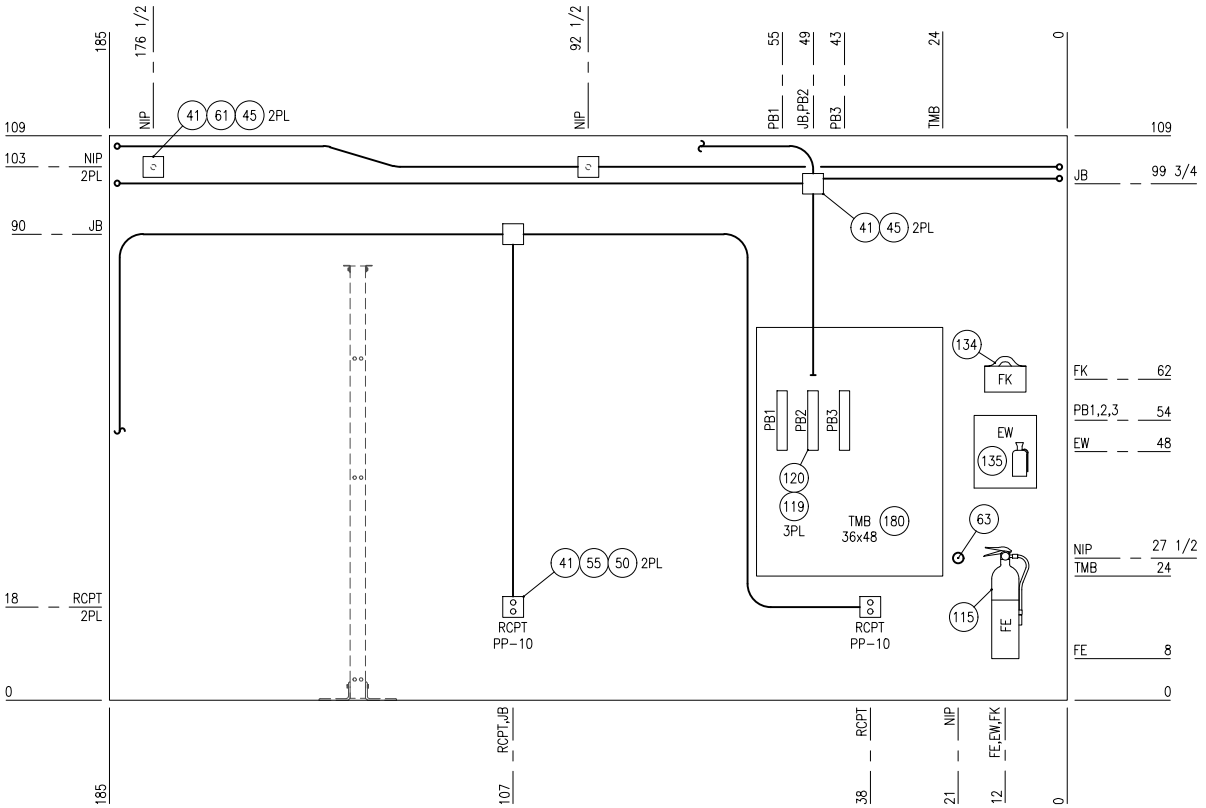

ELEVATION KEY

VFP, Inc. Corporate Office: 5410 Fallowater Lane; Roanoke, VA 24018/ Manufacturing Facility: 402 Industrial Park Road; Duffield, VA 24244

INTERIOR ELEVATION D WALL

REVISIONS			
CHG. BY	APPR. BY	DATE	REV

REGISTERED PROFESSIONAL ENGINEER
ALEXANDER TAKAHASHI
E-8508
Exp. 09-30-2024
ELECTRICAL
STATE OF CALIFORNIA

04-10-2023

Alexander Takahashi, P.E.
I certify that these documents were prepared or approved by me, and I am a duly licensed professional engineer under the laws of the State of California.
License No: E8508
Expiration Date: 093024

Site Name(s):
STRAUCH DRIVE
P.O.'s #: 9013484/ AGREEMENT 3002606
VFP Job #: 220742/DWG
Dash #: -001

VFP, INC.
CORPORATE OFFICE
5410 Fallowater Lane
Roanoke, Virginia 24018-0906
(540)977-0500 (540)977-5555 fax
MANUFACTURING FACILITY
540 Industrial Park Road
Duffield, Virginia 24244
(276)431-4000 (276)431-1756 fax

Except as may otherwise be provided by contract, these drawings and concepts are the sole property of VFP, Inc., they are issued in strict confidence, and shall not be reproduced in whole or part without the written permission of VFP, Inc.

DRAWN BY	T.SPIVEY/CMD	DATE 12/22/22
CHECKED BY		DATE 04-10-2023
CHECKED BY		DATE
DO NOT SCALE DRAWING		
SIZE B	CAGE NO	REV -
SCALE NTS	MODEL 7070	
TITLE	12'0" x 16'0" x 9'1" LIGHTWEIGHT SHELTER	
DRAWING NO.	207070	
SHEET	17 OF 26	

NOTES

a. ALL CONDUIT SHALL HAVE COMPRESSION TYPE FITTINGS

TOLERANCES

ALL DIMENSIONS ARE IN INCHES
UNLESS SPECIFIED OTHERWISE
STANDARD:
FRACTIONS ± 1/2"
DECIMALS ± 0.5"
ANGLES ± 3°
IF NOTED WITH SYMBOL: ▲
FRACTIONS ± 1/4"
DECIMALS ± 0.25"
ANGLES ± 1°
IF NOTED WITH SYMBOL: ⬣
FRACTIONS ± 1"
DECIMALS ± 1.0"
ANGLES ± 5°

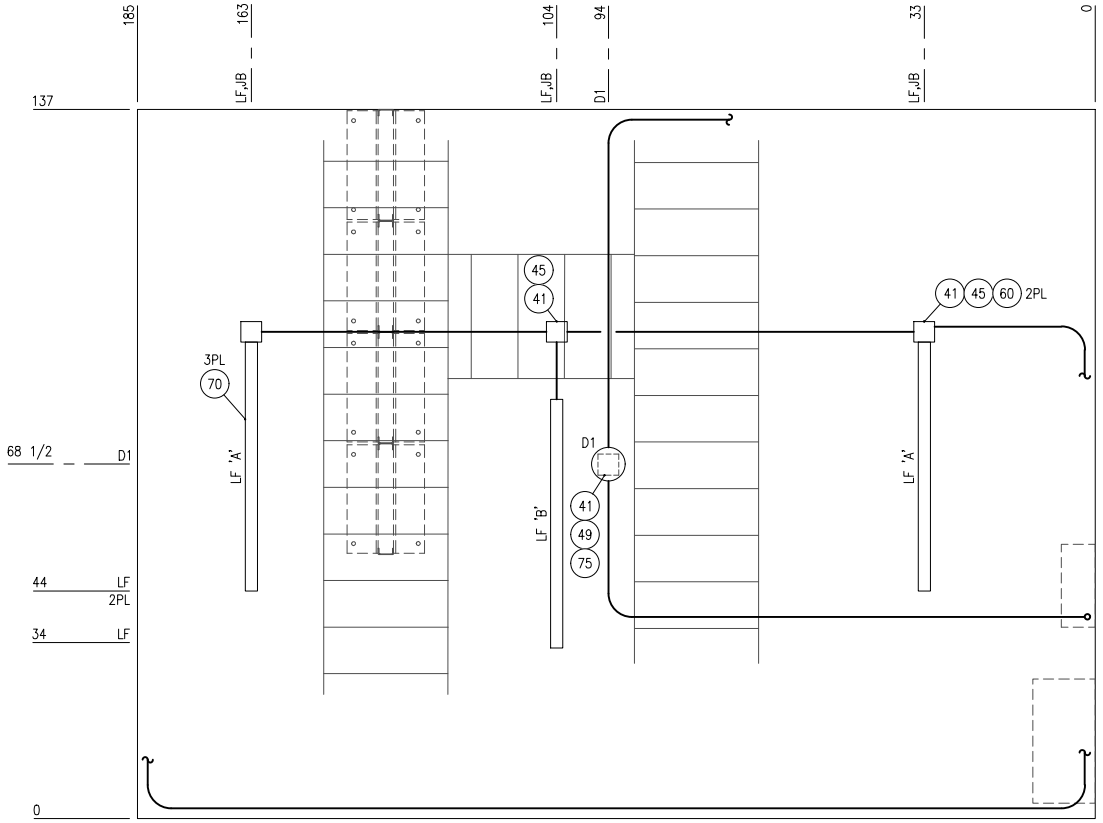

APPROVED: STATE OF CA - CERTIFIED DAA
Based on the requirements of title 25 California code of regulations
Chapter 3 subchapter 2 Commercial Modular
Date: 04-25-2023 Expires: 07-31-2024
Approval # PFS: 23-002714
THIS APPROVAL DOES NOT AUTHORIZE OR APPROVE ANY OMISSION OR DEVIATION FROM THE REQUIREMENTS OF STATE LAWS OR APPLICABLE LOCAL ORDINANCES . THIS APPROVAL IS LIMITED TO FACTORY-BUILT PORTION ONLY.
PFS CORPORATION - Cottage Grove, WI

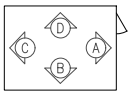

ELEVATION KEY

REFLECTED CEILING – ELECTRICAL

REVISIONS			
CHG. BY	APPR. BY	DATE	REV

REGISTERED PROFESSIONAL ENGINEER
ALEXANDER TAKAHASHI
E-8508
Exp. 09-30-2024
ELECTRICAL
STATE OF CALIFORNIA
04-10-2023

Alexander Takahashi, P.E.
I certify that these documents were prepared or approved by me, and I am a duly licensed professional engineer under the laws of the State of California.
License No: E8508
Expiration Date: 09.30.24

Site Name(s):
STRAUCH DRIVE
P.O.'s #: 9013484/
AGREEMENT 3002606
VFP Job #: 220742/DWG
Dash #: -001

VFP, INC.
CORPORATE OFFICE
5410 Fallowater Lane
Roanoke, Virginia 24018-0906
(540)977-0500 (540)977-5555 fax
MANUFACTURING FACILITY
540 Industrial Park Road
Duffield, Virginia 24244
(276)431-4000 (276)431-1756 fax

Except as may otherwise be provided by contract, these drawings and concepts are the sole property of VFP, Inc., they are issued in strict confidence, and shall not be reproduced in whole or part without the written permission of VFP, Inc.

DRAWN BY	DATE
T.SPIVEY/CMD	12/22/22
CHECKED BY	DATE
	04-10-2023
CHECKED BY	DATE

DO NOT SCALE DRAWING

SIZE	CAGE NO	REV
B		-

SCALE	MODEL
NTS	7070

TITLE
12'0" x 16'0" x 9'1"
LIGHTWEIGHT SHELTER

DRAWING NO.
207070

SHEET
18 OF 26

TOLERANCES

ALL DIMENSIONS ARE IN INCHES
UNLESS SPECIFIED OTHERWISE
STANDARD:
FRACTIONS ± 1/2"
DECIMALS ± 0.5"
ANGLES ± 3°
IF NOTED WITH SYMBOL: ▲
FRACTIONS ± 1/4"
DECIMALS ± 0.25"
ANGLES ± 1°
IF NOTED WITH SYMBOL: ⬢
FRACTIONS ± 1"
DECIMALS ± 1.0"
ANGLES ± 5°

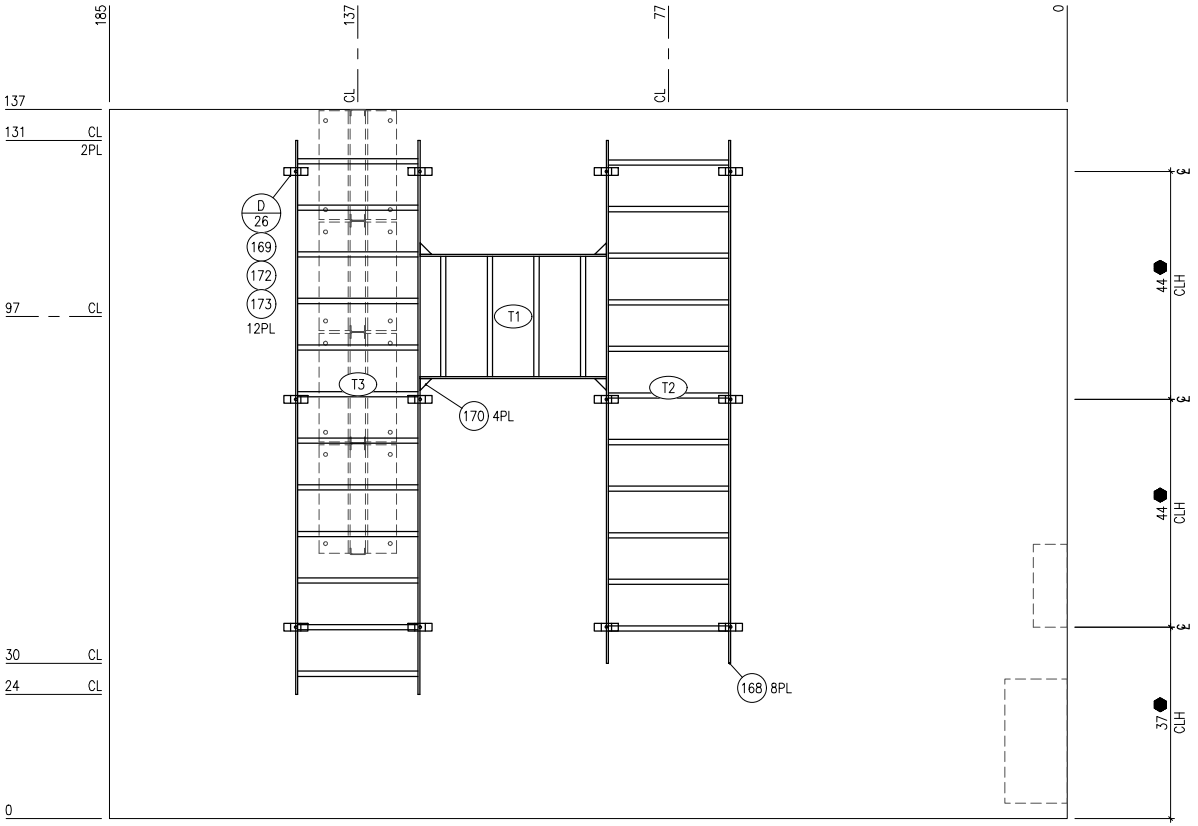

CUT TABLE			
TAG	QTY	ITEM	CUT LENGTH
T1	1	171	36"
T2	1	171	101"
T3	1	171	107"

APPROVED: STATE OF CA - CERTIFIED DAA
Based on the requirements of title 25 California code of regulations
Chapter 3 subchapter 2 Commercial Modular
Date: 04-25-2023 Expires: 07-31-2024
Approval # PFS: 23-002714
THIS APPROVAL DOES NOT AUTHORIZE OR APPROVE ANY OMISSION OR DEVIATION FROM THE REQUIREMENTS OF STATE LAWS OR APPLICABLE LOCAL ORDINANCES . THIS APPROVAL IS LIMITED TO FACTORY-BUILT PORTION ONLY.
PFS CORPORATION - Cottage Grove, WI

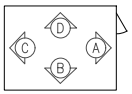

ELEVATION KEY

REFLECTED CEILING – CABLE LADDER

REVISIONS			
CHG. BY	APPR. BY	DATE	REV

REGISTERED PROFESSIONAL ENGINEER
ALEXANDER TAKAHASHI
E-8508
Exp. 09-30-2024
ELECTRICAL
STATE OF CALIFORNIA
04-10-2023

Alexander Takahashi, P.E.
I certify that these documents were prepared or approved by me, and I am a duly licensed professional engineer under the laws of the State of California.
License No: E8508
Expiration Date: 093024

Site Name(s):
STRAUCH DRIVE
P.O.'s #: 9013484/
AGREEMENT 3002606
VFP Job #: 220742/DWG
Dash #: -001

VFP, INC.
CORPORATE OFFICE
5410 Fallowater Lane
Roanoke, Virginia 24018-0906
(540)977-0500 (540)977-5555 fax
MANUFACTURING FACILITY
540 Industrial Park Road
Duffield, Virginia 24244
(276)431-4000 (276)431-1756 fax

Except as may otherwise be provided by contract, these drawings and concepts are the sole property of VFP, Inc., they are issued in strict confidence, and shall not be reproduced in whole or part without the written permission of VFP, Inc.

DRAWN BY: T.SPIVEY/CMD	DATE: 12/22/22
CHECKED BY:	DATE: 04-10-2023
CHECKED BY:	DATE:
DO NOT SCALE DRAWING	
SIZE: B	CAGE NO:
REV: -	
SCALE: NTS	MODEL: 7070
TITLE: 12'0" x 16'0" x 9'1" LIGHTWEIGHT SHELTER	
DRAWING NO.: 207070	
SHEET: 19 OF 26	

TOLERANCES

ALL DIMENSIONS ARE IN INCHES
UNLESS SPECIFIED OTHERWISE
STANDARD:
FRACTIONS ± 1/2"
DECIMALS ± 0.5"
ANGLES ± 3°
IF NOTED WITH SYMBOL: ▲
FRACTIONS ± 1/4"
DECIMALS ± 0.25"
ANGLES ± 1°
IF NOTED WITH SYMBOL: ⬣
FRACTIONS ± 1"
DECIMALS ± 1.0"
ANGLES ± 5°

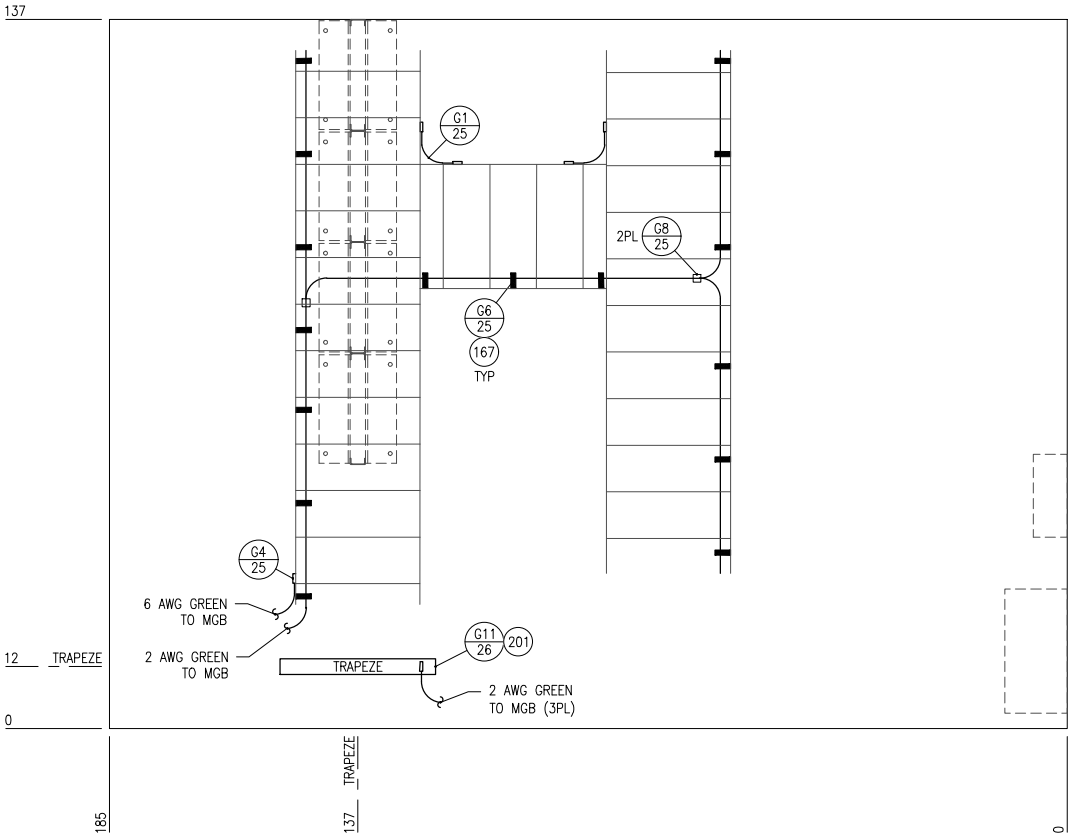

APPROVED: STATE OF CA - CERTIFIED DAA
Based on the requirements of title 25 California code of regulations
Chapter 3 subchapter 2 Commercial Modular
Date: 04-25-2023 Expires: 07-31-2024
Approval # PFS: 23-002714
THIS APPROVAL DOES NOT AUTHORIZE OR APPROVE ANY OMISSION OR DEVIATION FROM THE REQUIREMENTS OF STATE LAWS OR APPLICABLE LOCAL ORDINANCES . THIS APPROVAL IS LIMITED TO FACTORY-BUILT PORTION ONLY.
PFS CORPORATION - Cottage Grove, WI

ELEVATION KEY

REFLECTED CEILING – EQUIPMENT GROUND

REVISIONS			
CHG. BY	APPR. BY	DATE	REV

REGISTERED PROFESSIONAL ENGINEER
ALEXANDER TAKAHASHI III
E-8508
Exp. 09-30-2024
ELECTRICAL
STATE OF CALIFORNIA
04-10-2023

Alexander Takahashi, P.E.
I certify that these documents were prepared or approved by me, and I am a duly licensed professional engineer under the laws of the State of California.
License No: E8508
Expiration Date: 09/30/24

Site Name(s):
STRAUCH DRIVE
P.O.'s #: 9013484/
AGREEMENT 3002606
VFP Job #: 220742/DWG
Dash #: -001

VFP, INC.
CORPORATE OFFICE
5410 Fallowater Lane
Roanoke, Virginia 24018-0906
(540)977-0500 (540)977-5555 fax
MANUFACTURING FACILITY
540 Industrial Park Road
Duffield, Virginia 24244
(276)431-4000 (276)431-1756 fax

Except as may otherwise be provided by contract, these drawings and concepts are the sole property of VFP, Inc., they are issued in strict confidence, and shall not be reproduced in whole or part without the written permission of VFP, Inc.

DRAWN BY: T.SPIVEY/CMD	DATE: 12/22/22
CHECKED BY:	DATE: 04-10-2023
CHECKED BY:	DATE:
DO NOT SCALE DRAWING	
SIZE: B	CAGE NO:
REV: -	
SCALE: NTS	MODEL: 7070
TITLE: 12'0" x 16'0" x 9'1" LIGHTWEIGHT SHELTER	
DRAWING NO.: 207070	
SHEET: 20 OF 26	

TOLERANCES

ALL DIMENSIONS ARE IN INCHES
UNLESS SPECIFIED OTHERWISE
STANDARD:
FRACTIONS ± 1/2"
DECIMALS ± 0.5"
ANGLES ± 3°
IF NOTED WITH SYMBOL: ▲
FRACTIONS ± 1/4"
DECIMALS ± 0.25"
ANGLES ± 1°
IF NOTED WITH SYMBOL: ⬣
FRACTIONS ± 1"
DECIMALS ± 1.0"
ANGLES ± 5°

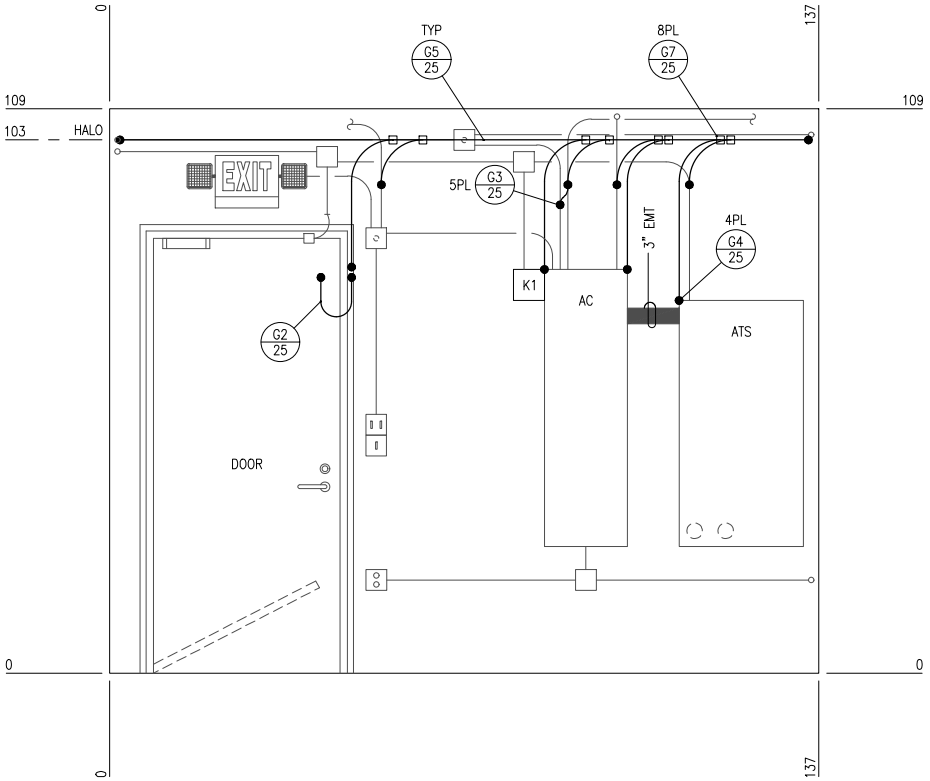

APPROVED: STATE OF CA - CERTIFIED DAA
Based on the requirements of title 25 California code of regulations
Chapter 3 subchapter 2 Commercial Modular
Date: 04-25-2023 Expires: 07-31-2024
Approval # PFS: 23-002714
THIS APPROVAL DOES NOT AUTHORIZE OR APPROVE ANY OMISSION OR DEVIATION FROM THE REQUIREMENTS OF STATE LAWS OR APPLICABLE LOCAL ORDINANCES . THIS APPROVAL IS LIMITED TO FACTORY-BUILT PORTION ONLY.
PFS CORPORATION - Cottage Grove, WI

ELEVATION KEY

INTERIOR ELEVATION A WALL – GROUNDING

REVISIONS			
CHG. BY	APPR. BY	DATE	REV

REGISTERED PROFESSIONAL ENGINEER
ALEXANDER TAKAHASHI II
E-8508
Exp. 09-30-2024
ELECTRICAL
STATE OF CALIFORNIA
04-10-2023

Alexander Takahashi, P.E.
I certify that these documents were prepared or approved by me, and I am a duly licensed professional engineer under the laws of the State of California.
License No: E8508
Expiration Date: 09/0/24

Site Name(s):
STRAUCH DRIVE
P.O.'s #: 9013484/
AGREEMENT 3002606
VFP Job #: 220742/DWG
Dash #: -001

VFP, INC.

CORPORATE OFFICE
5410 Fallowater Lane
Roanoke, Virginia 24018-0906
(540)977-0500 (540)977-5555 fax
MANUFACTURING FACILITY
540 Industrial Park Road
Dufflield, Virginia 24244
(276)431-4000 (276)431-1756 fax

Except as may otherwise be provided by contract, these drawings and concepts are the sole property of VFP, Inc., they are issued in strict confidence, and shall not be reproduced in whole or part without the written permission of VFP, Inc.

DRAWN BY: T.SPIVEY/CMD	DATE: 12/22/22
CHECKED BY:	DATE: 04-10-2023
CHECKED BY:	DATE:
DO NOT SCALE DRAWING	
SIZE: B	CAGE NO:
REV: -	
SCALE: NTS	MODEL: 7070

TITLE: 12'0" x 16'0" x 9'1" LIGHTWEIGHT SHELTER

DRAWING NO.: 207070

SHEET: 21 OF 26

NOTES

(a) CONNECT MGB TO WAVEGUIDE WITH 2 AWG GRN.

TOLERANCES

ALL DIMENSIONS ARE IN INCHES
UNLESS SPECIFIED OTHERWISE
STANDARD:
FRACTIONS ± 1/2"
DECIMALS ± 0.5"
ANGLES ± 3°
IF NOTED WITH SYMBOL: ▲
FRACTIONS ± 1/4"
DECIMALS ± 0.25"
ANGLES ± 1°
IF NOTED WITH SYMBOL: ⬣
FRACTIONS ± 1"
DECIMALS ± 1.0"
ANGLES ± 5°

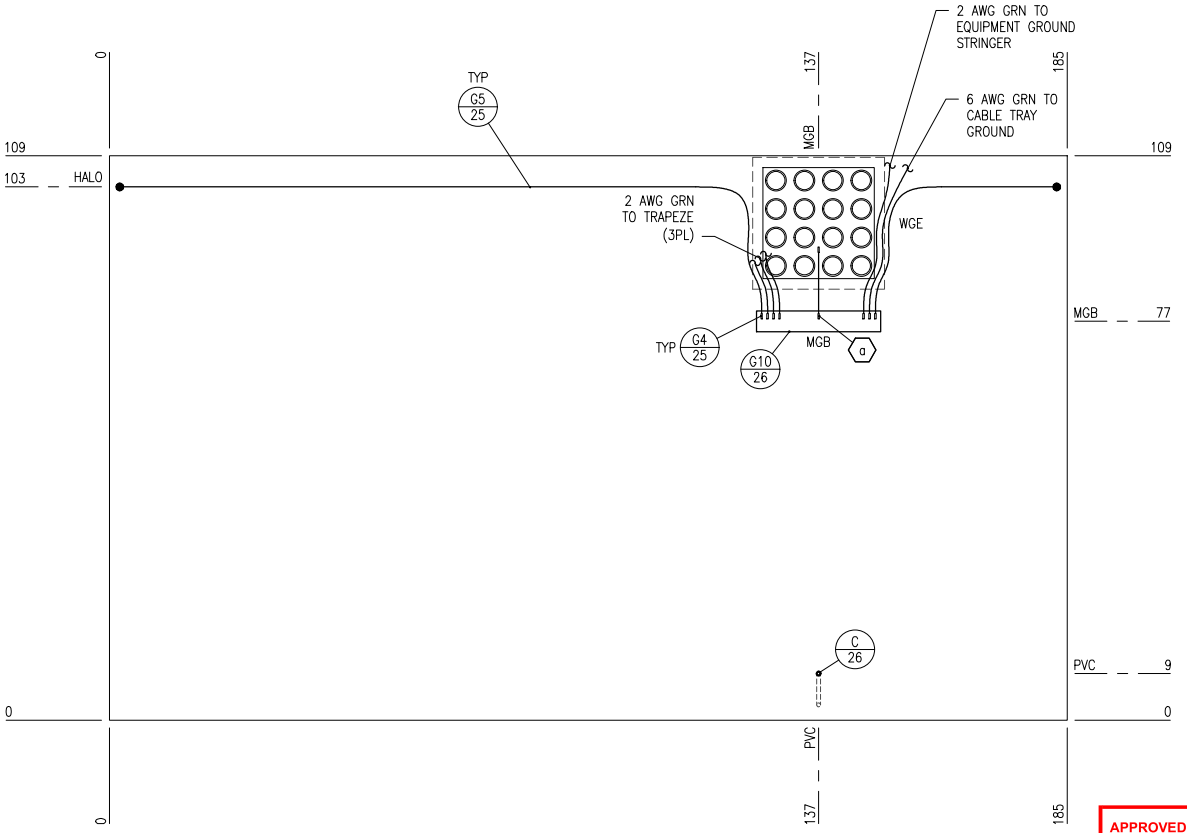

APPROVED: STATE OF CA - CERTIFIED DAA
Based on the requirements of title 25 California code of regulations
Chapter 3 subchapter 2 Commercial Modular
Date: 04-25-2023 Expires: 07-31-2024
Approval # PFS: 23-002714
THIS APPROVAL DOES NOT AUTHORIZE OR APPROVE ANY OMISSION OR DEVIATION FROM THE REQUIREMENTS OF STATE LAWS OR APPLICABLE LOCAL ORDINANCES . THIS APPROVAL IS LIMITED TO FACTORY-BUILT PORTION ONLY.
PFS CORPORATION - Cottage Grove, WI

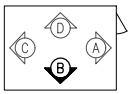

ELEVATION KEY

INTERIOR ELEVATION B WALL – GROUNDING

REVISIONS			
CHG. BY	APPR. BY	DATE	REV

REGISTERED PROFESSIONAL ENGINEER
ALEXANDER TAKAHASHI
E-8508
Exp. 09-30-2024
ELECTRICAL
STATE OF CALIFORNIA
04-10-2023

Alexander Takahashi, P.E.
I certify that these documents were prepared or approved by me, and I am a duly licensed professional engineer under the laws of the State of California.
License No: E8508
Expiration Date: 09/30/24

Site Name(s):
STRAUCH DRIVE
P.O.'s #: 9013484/
AGREEMENT 3002606
VFP Job #: 220742/DWG
Dash #: -001

VFP, INC.
CORPORATE OFFICE
5410 Fallowater Lane
Roanoke, Virginia 24018-0906
(540)977-0500 (540)977-5555 fax
MANUFACTURING FACILITY
540 Industrial Park Road
Duffield, Virginia 24244
(276)431-4000 (276)431-1756 fax

Except as may otherwise be provided by contract, these drawings and concepts are the sole property of VFP, Inc., they are issued in strict confidence, and shall not be reproduced in whole or part without the written permission of VFP, Inc.

DRAWN BY: T.SPIVEY/CMD	DATE: 12/22/22
CHECKED BY:	DATE: 04-10-2023
CHECKED BY:	DATE:
DO NOT SCALE DRAWING	
SIZE: B	CAGE NO:
REV: -	
SCALE: NTS	MODEL: 7070
TITLE: 12'0" x 16'0" x 9'1" LIGHTWEIGHT SHELTER	
DRAWING NO.: 207070	
SHEET: 22 OF 26	

TOLERANCES

ALL DIMENSIONS ARE IN INCHES UNLESS SPECIFIED OTHERWISE

STANDARD:
- FRACTIONS ± 1/2"
- DECIMALS ± 0.5"
- ANGLES ± 3°

IF NOTED WITH SYMBOL:
- ▲ FRACTIONS ± 1/4"
- DECIMALS ± 0.25"
- ANGLES ± 1°

IF NOTED WITH SYMBOL:
- ⬢ FRACTIONS ± 1"
- DECIMALS ± 1.0"
- ANGLES ± 5°

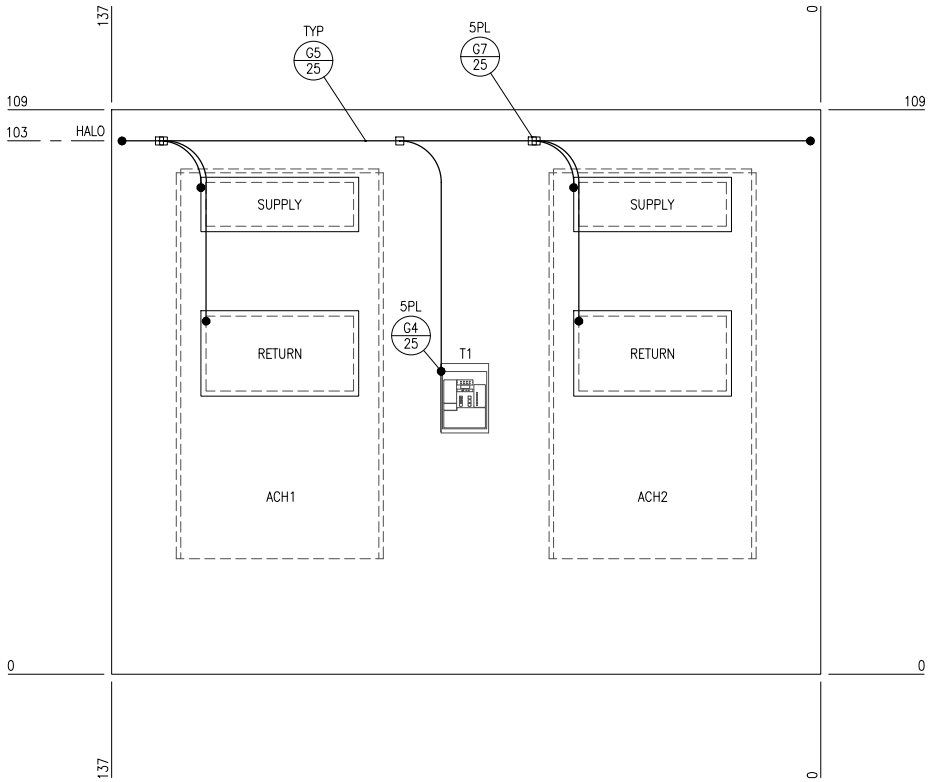

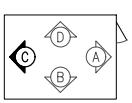

ELEVATION KEY

APPROVED: STATE OF CA - CERTIFIED DAA

Based on the requirements of title 25 California code of regulations
Chapter 3 subchapter 2 Commercial Modular

Date: 04-25-2023 Expires: 07-31-2024

Approval # PFS: 23-002714

THIS APPROVAL DOES NOT AUTHORIZE OR APPROVE ANY OMISSION OR DEVIATION FROM THE REQUIREMENTS OF STATE LAWS OR APPLICABLE LOCAL ORDINANCES . THIS APPROVAL IS LIMITED TO FACTORY-BUILT PORTION ONLY.

PFS CORPORATION - Cottage Grove, WI

INTERIOR ELEVATION C WALL – GROUNDING

REVISIONS			
CHG. BY	APPR. BY	DATE	REV

REGISTERED PROFESSIONAL ENGINEER
ALEXANDER TAKAHASHI
E-8508
Exp. 09-30-2024
ELECTRICAL
STATE OF CALIFORNIA

04-10-2023

Alexander Takahashi, P.E.
I certify that these documents were prepared or approved by me, and I am a duly licensed professional engineer under the laws of the State of California.
License No: E8508
Expiration Date: 09/30/24

Site Name(s):
STRAUCH DRIVE
P.O.'s #: 9013484/ AGREEMENT 3002606
VFP Job #: 220742/DWG
Dash #: -001

VFP, INC.

CORPORATE OFFICE
5410 Fallowater Lane
Roanoke, Virginia 24018-0906
(540)977-0500 (540)977-5555 fax

MANUFACTURING FACILITY
540 Industrial Park Road
Duffield, Virginia 24244
(276)431-4000 (276)431-1756 fax

Except as may otherwise be provided by contract, these drawings and concepts are the sole property of VFP, Inc., they are issued in strict confidence, and shall not be reproduced in whole or part without the written permission of VFP, Inc.

DRAWN BY T.SPIVEY/CMD	DATE 12/22/22
CHECKED BY	DATE 04-10-2023
CHECKED BY	DATE
DO NOT SCALE DRAWING	
SIZE B	CAGE NO / REV –
SCALE NTS	MODEL 7070
TITLE 12'0" x 16'0" x 9'1" LIGHTWEIGHT SHELTER	
DRAWING NO. 207070	
SHEET 23 OF 26	

TOLERANCES

ALL DIMENSIONS ARE IN INCHES
UNLESS SPECIFIED OTHERWISE
STANDARD:
FRACTIONS ± 1/2"
DECIMALS ± 0.5"
ANGLES ± 3°
IF NOTED WITH SYMBOL: ▲
FRACTIONS ± 1/4"
DECIMALS ± 0.25"
ANGLES ± 1°
IF NOTED WITH SYMBOL: ⬣
FRACTIONS ± 1"
DECIMALS ± 1.0"
ANGLES ± 5°

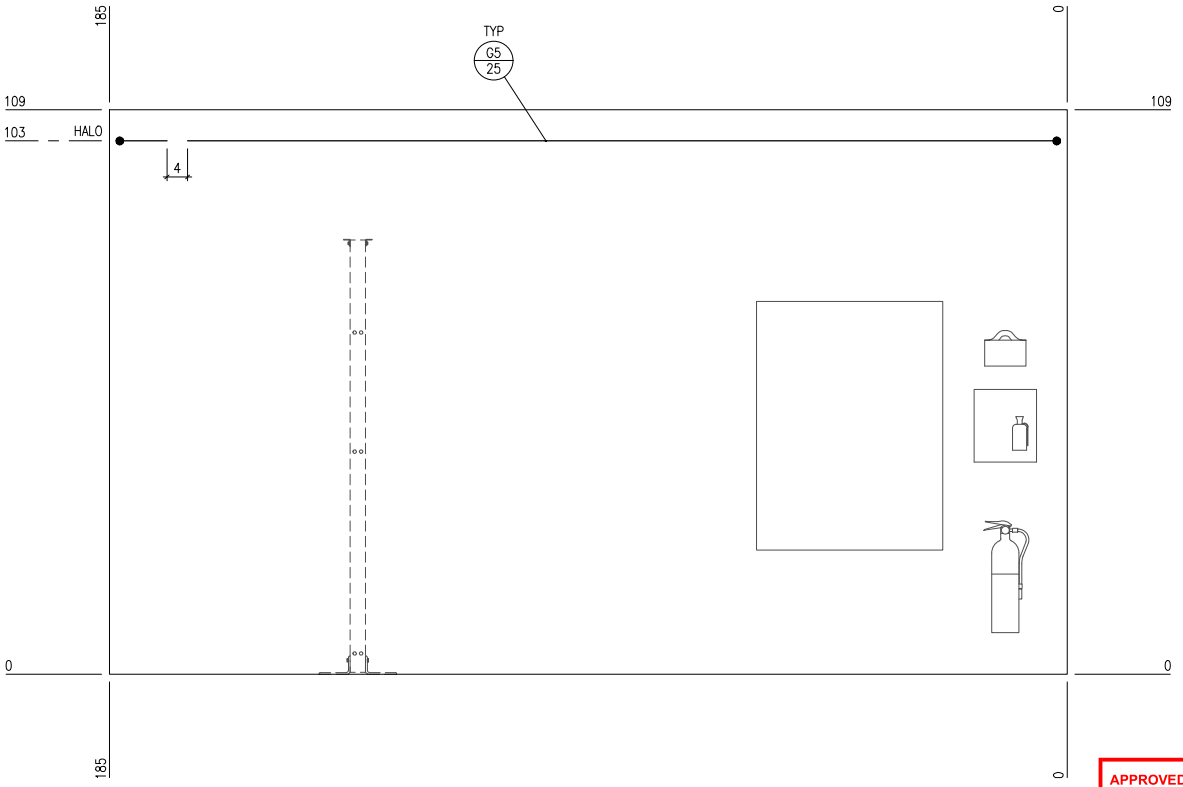

ELEVATION KEY

APPROVED: STATE OF CA - CERTIFIED DAA
Based on the requirements of title 25 California code of regulations
Chapter 3 subchapter 2 Commercial Modular
Date: 04-25-2023 Expires: 07-31-2024
Approval # PFS: 23-002714
THIS APPROVAL DOES NOT AUTHORIZE OR APPROVE ANY OMISSION OR DEVIATION FROM THE REQUIREMENTS OF STATE LAWS OR APPLICABLE LOCAL ORDINANCES . THIS APPROVAL IS LIMITED TO FACTORY-BUILT PORTION ONLY.
PFS CORPORATION - Cottage Grove, WI

INTERIOR ELEVATION D WALL – GROUNDING

REVISIONS			
CHG. BY	APPR. BY	DATE	REV

REGISTERED PROFESSIONAL ENGINEER
ALEXANDER TAKAHASHI
E 8508
Exp. 09-30-2024
ELECTRICAL
STATE OF CALIFORNIA

04-10-2023

Alexander Takahashi, P.E.
I certify that these documents were prepared or approved by me, and I am a duly licensed professional engineer under the laws of the State of California.
License No: E8508
Expiration Date: 09/30/24

Site Name(s):
STRAUCH DRIVE
P.O.'s #: 9013484/
AGREEMENT 3002606
VFP Job #: 220742/DWG
Dash #: -001

VFP, INC.
CORPORATE OFFICE
5410 Fallowater Lane
Roanoke, Virginia 24018-0906
(540)977-0500 (540)977-5555 fax
MANUFACTURING FACILITY
540 Industrial Park Road
Duffield, Virginia 24244
(276)431-4000 (276)431-1756 fax

Except as may otherwise be provided by contract, these drawings and concepts are the sole property of VFP, Inc., they are issued in strict confidence, and shall not be reproduced in whole or part without the written permission of VFP, Inc.

DRAWN BY: T.SPIVEY/CMD	DATE: 12/22/22
CHECKED BY:	DATE: 04-10-2023
CHECKED BY:	DATE:
DO NOT SCALE DRAWING	
SIZE: B	CAGE NO:
REV: -	
SCALE: NTS	MODEL: 7070
TITLE: 12'0" x 16'0" x 9'1" LIGHTWEIGHT SHELTER	
DRAWING NO.: 207070	
SHEET: 24 OF 26	

NOTES

1. THE RADIUS OF ANY BEND SHALL NOT BE LESS THAN 8"
2. THE ANGLE OF ANY BEND SHALL NOT BE LESS THAN 90°
3. COMPRESSION SYSTEMS SHALL INCLUDE CRIMPED DIE INDEX AND COMPANY LOGO FOR PURPOSES OF INSPECTION
4. LISTED TWO-HOLE, LONG BARREL, COMPRESSION LUGS ARE PREFERRED OVER SINGLE-HOLE LUGS AND SHALL BE REQUIRED WHERE TWO-HOLE LUGS ARE REFERENCED IN R56.
5. ANTI-OX (NO-OX) SHALL BE APPLIED TO ALL CONNECTIONS OF DISSIMILAR METALS.
6. COPPER ENHANCED ANTI-OXIDANT COMPOUND (KOPR-SHIELD) SHOULD BE USED BETWEEN COPPER, BRASS, BRONZE, AND TIN-PLATED BONDING SURFACES.
7. WHERE THREADED HOLES ARE PROVIDED FOR ATTACHMENT PURPOSES, A STAR OR SPLIT TYPE LOCK WASHER SHALL BE INSTALLED UNDER THE HEAD OF THE SCREW OR BOLT AND/OR BETWEEN THE NUT AND THE GROUND BUS BAR.
8. SELF-TAPPING SCREWS SHALL NOT BE USED

R56 GROUNDING COMPLIANT

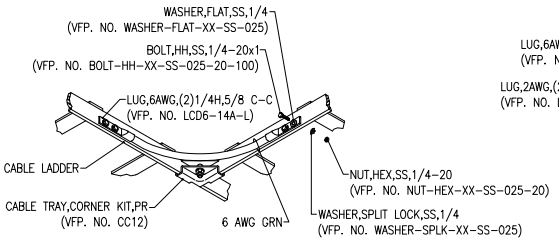

G1 CABLE LADDER BOND
(STANDARD 1-1/2" RAIL)

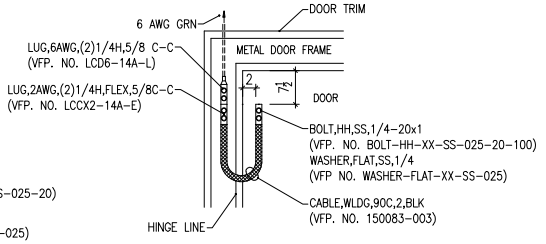

G2 DOOR BONDING STRAP
install on exterior doors

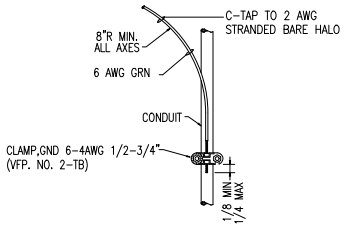

G3 CONDUIT BOND
SEE DETAIL "G8" FOR C-TAP DETAIL

APPROVED: STATE OF CA - CERTIFIED DAA
Based on the requirements of title 25 California code of regulations
Chapter 3 subchapter 2 Commercial Modular
Date: 04-25-2023 Expires: 07-31-2024
Approval # PFS: 23-002714
THIS APPROVAL DOES NOT AUTHORIZE OR APPROVE ANY OMISSION OR DEVIATION FROM THE REQUIREMENTS OF STATE LAWS OR APPLICABLE LOCAL ORDINANCES . THIS APPROVAL IS LIMITED TO FACTORY-BUILT PORTION ONLY.
PFS CORPORATION - Cottage Grove, WI

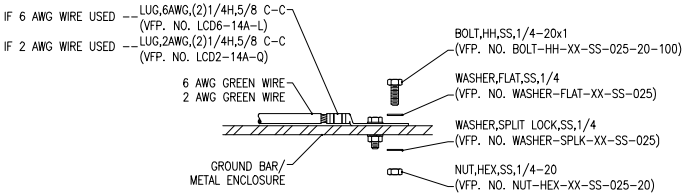

Installation Notes
a. select bolt length to provide a minimum of two exposed threads.
b. burnish mounting surface to remove paint in the area of lug contact.
c. apply anti-oxidant compound to mating surface of lug and wipe clean excess compound.
d. use solid copper wire and mechanical 2-hole lug for all exterior grounding.
e. Stainless hardware only.

G4 GROUNDING CONNECTION
SEE NOTES 5 & 6

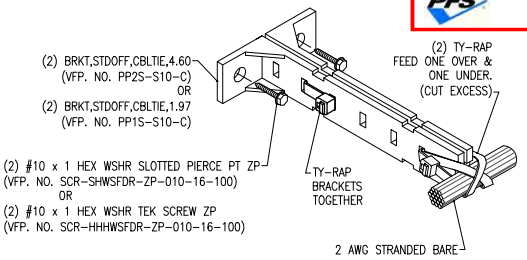

G5 IPBB GROUND INSTALLATION
screw to interior wall @ 16" O.C. MAX

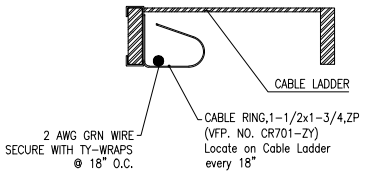

G6 NEWTON BRACKET PLACED ON INTERIOR OF CL W/ GROUND INSTALLATION

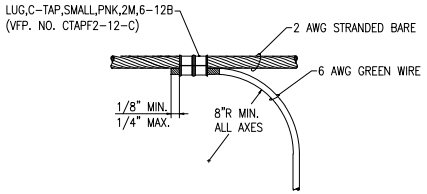

G7 HALO RING GROUND TAP

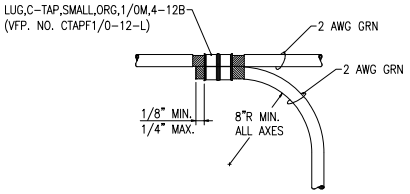

G8 CABLE LADDER EQUIPMENT GROUND TAP

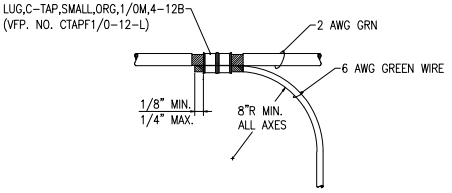

G9 EQUIPMENT GROUND TAP

GROUNDING DETAILS

REVISIONS			
CHG. BY	APPR. BY	DATE	REV

REGISTERED PROFESSIONAL ENGINEER ALEXANDER TAKAHASHI E-8508 Exp. 09-30-2024 ELECTRICAL STATE OF CALIFORNIA
04-10-2023

Alexander Takahashi, P.E.
I certify that these documents were prepared or approved by me, and I am a duly licensed professional engineer under the laws of the State of California.
License No: E8508
Expiration Date: 09/30/24

Site Name(s):
STRAUCH DRIVE
P.O.'s #: 9013484/ AGREEMENT 3002606
VFP Job #: 220742/DWG
Dash #: -001

VFP, INC.
CORPORATE OFFICE
5410 Fallowater Lane
Roanoke, Virginia 24018-0906
(540)977-0500 (540)977-5555 fax
MANUFACTURING FACILITY
540 Industrial Park Road
Duffield, Virginia 24244
(276)431-4000 (276)431-1756 fax

Except as may otherwise be provided by contract, these drawings and concepts are the sole property of VFP, Inc., they are issued in strict confidence, and shall not be reproduced in whole or part without the written permission of VFP, Inc.

DRAWN BY	T.SPIVEY/CMD
DATE	12/22/22
CHECKED BY	
DATE	04-10-2023
CHECKED BY	
DATE	
DO NOT SCALE DRAWING	
SIZE	B
CAGE NO	
REV	-
SCALE	NTS
MODEL	7070
TITLE	12'0" x 16'0" x 9'1" LIGHTWEIGHT SHELTER
DRAWING NO.	207070
SHEET	25 OF 26

FINISHING NOTES

a. REFER TO FASTENING SCHEDULE SHEET 3.

b. REFER TO INTERIOR ELEVATION SHEETS BEFORE ROUTING INTERIOR SHEATHING FOR MISCELLANEOUS OPENINGS.

c. REFER TO MANUFACTURING WORK ORDER FOR EXTERIOR AND INTERIOR FINISH OF BUILDING. REFER TO DETAIL A THIS PAGE FOR FLOOR COVERING.

APPROVED: STATE OF CA - CERTIFIED DAA

Based on the requirements of title 25 California code of regulations
Chapter 3 subchapter 2 Commercial Modular

Date: 04-25-2023 Expires: 07-31-2024

Approval # PFS: 23-002714

THIS APPROVAL DOES NOT AUTHORIZE OR APPROVE ANY OMISSION OR DEVIATION FROM THE REQUIREMENTS OF STATE LAWS OR APPLICABLE LOCAL ORDINANCES . THIS APPROVAL IS LIMITED TO FACTORY-BUILT PORTION ONLY.

PFS CORPORATION - Cottage Grove, WI

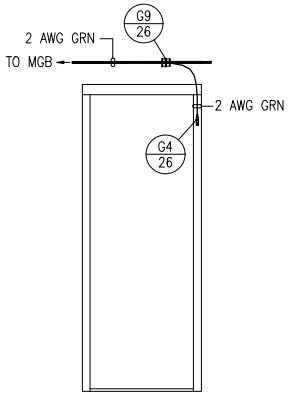

E1 EQUIPMENT RACK GROUNDING

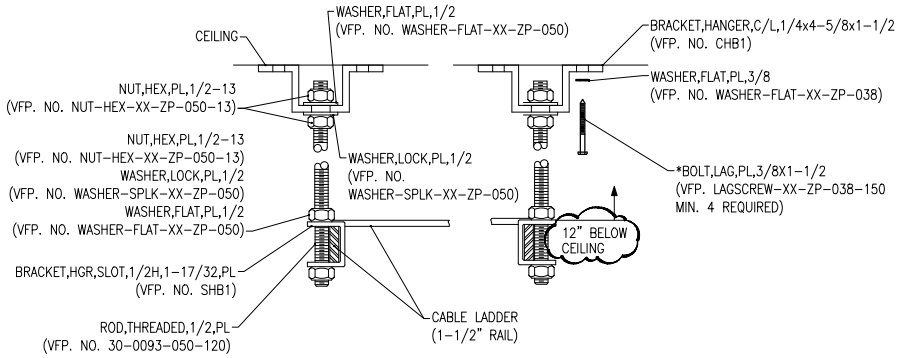

D HANGER INSTALLATION DETAIL

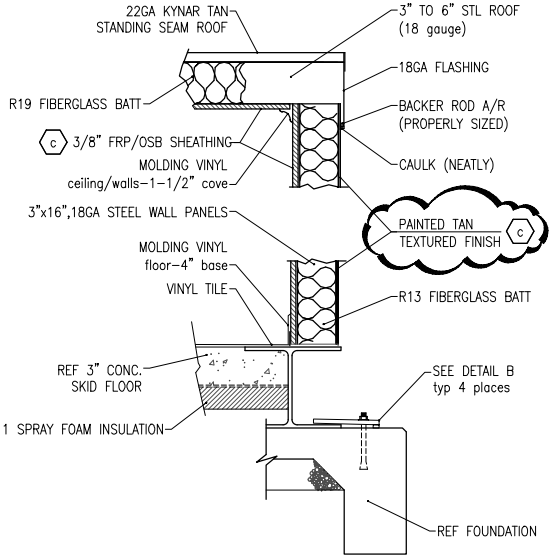

A BUILDING CONSTRUCTION
elevation cut-away

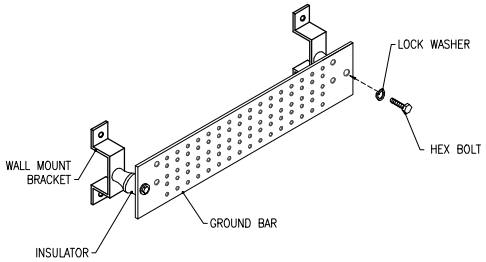

G10 MAIN GROUND BAR INSTALLATION

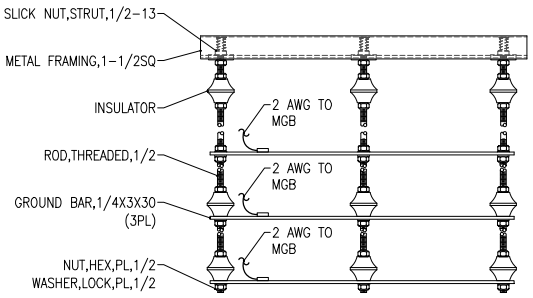

G11 TRAPEZE INSTALLATION

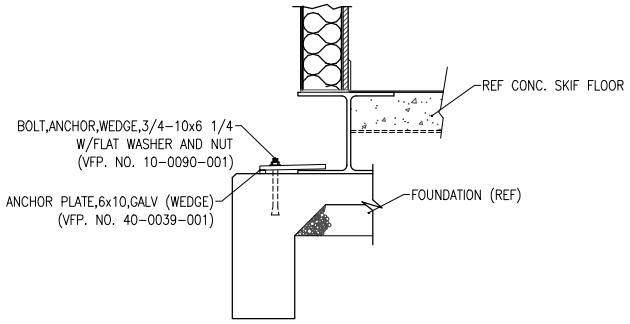

B BUILDING ATTACHMENT FIELD WORK
elevation cut away - from detail A

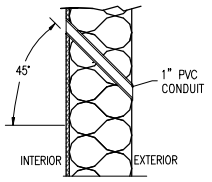

C PVC NIPPLE INSTALLATION

CONSTRUCTION DETAILS

REVISIONS			
CHG. BY	APPR. BY	DATE	REV

REGISTERED PROFESSIONAL ENGINEER
ALEXANDER TAKAHASHI
E-8508
EXP. 09-30-2024
ELECTRICAL
STATE OF CALIFORNIA

04-20-2023
Alexander Takahashi, P.E.
I certify that these documents were prepared or approved by me, and I am a duly licensed professional engineer under the laws of the State of California.
License No: E8508
Expiration Date: 09/30/24

Site Name(s):
STRAUCH DRIVE
P.O.'s #: 9013484/
AGREEMENT 3002606
VFP Job #: 220742/DWG
Dash #: -001

VFP, INC.
CORPORATE OFFICE
5410 Fallowater Lane
Roanoke, Virginia 24018-0906
(540)977-0500 (540)977-5555 fax
MANUFACTURING FACILITY
540 Industrial Park Road
Duffield, Virginia 24244
(276)431-4000 (276)431-1756 fax

Except as may otherwise be provided by contract, these drawings and concepts are the sole property of VFP, Inc., they are issued in strict confidence, and shall not be reproduced in whole or part without the written permission of VFP, Inc.

DRAWN BY: T.SPIVEY/CMD	DATE: 12/22/22
CHECKED BY:	DATE: 04-20-2023
CHECKED BY:	DATE:
DO NOT SCALE DRAWING	
SIZE: B	CAGE NO:
REV: -	
SCALE: NTS	MODEL: 7070

TITLE: 12'0" x 16'0" x 9'1" LIGHTWEIGHT SHELTER

DRAWING NO. 207070

SHEET 26 OF 26

NOTES:

1. RUN SHEATHING AS REQUIRED TO MINIMIZE BLOCKING NEEDED.
2. RUN "C" CHANNEL AT THE TOP AND BOTTOM OF ALL WALLS.
3. HOLD INTERIOR SHEATHING 1" UP FROM BOTTOM OF WALLS.
4. C-PAN WALL LAYOUT SHOWN WITH OPEN SIDE OF PANS UP.
5. SLOTS ARE REQUIRED IN PANS FOR TRACK.
6. TEXTURED TAN

APPROVED: STATE OF CA - CERTIFIED DAA

Based on the requirements of title 25 California code of regulations
Chapter 3 subchapter 2 Commercial Modular

Date: 04-25-2023 Expires: 07-31-2024

Approval # PFS: 23-002714

THIS APPROVAL DOES NOT AUTHORIZE OR APPROVE ANY OMISSION OR DEVIATION FROM THE REQUIREMENTS OF STATE LAWS OR APPLICABLE LOCAL ORDINANCES . THIS APPROVAL IS LIMITED TO FACTORY-BUILT PORTION ONLY.

PFS CORPORATION - Cottage Grove, WI

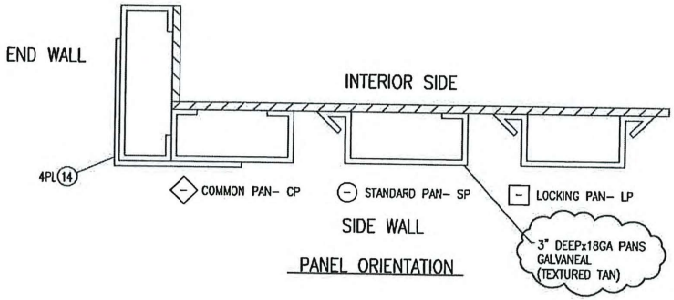

PANEL ORIENTATION

ITEM	QTY	DESCRIPTION
14	4	CORNER COVER, 8 x 8 x 111
13	4	STUDS, 3 WIDE, x 108 LONG
12	8	TRACK, 1.75 x 2.875 x 3.062 x 144"
11	2	STIFFENER 2.75 x 1.5 x 110.75
10	2	OPENING CAP 1.5 x 1.5 x 3.062 x 21.5
6	1	CP - 5.75 X 111 HIGH PAN (SPLIT PAN)
5	1	LP - 10.75 X 8.75 HIGH PAN
4	1	LP - 21.50 X 3.25 HIGH PAN
3	1	SP - 10.75 X 8.75 HIGH PAN
2	9	SP - 16 X 111 HIGH PAN (2 REVERSED)
1	1	CP - 14.75 X 111 HIGH PAN

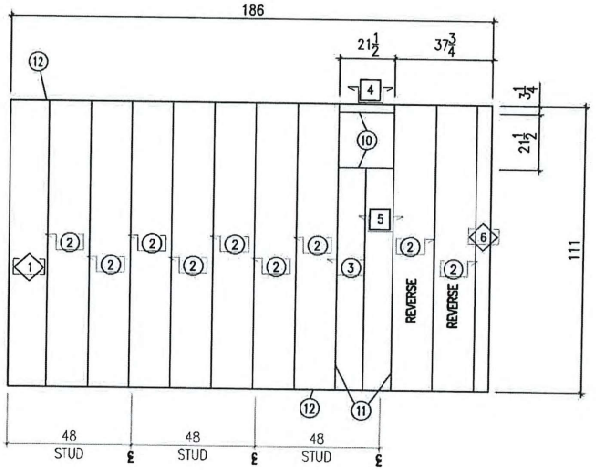

LEFT WALL ELEVATION B

LEFT LONG WALL PANEL

REVISIONS

CHG. BY	APPR. BY	DATE	REV

REGISTERED PROFESSIONAL ENGINEER BRIAN K. YEE No. 40826 CIVIL STATE OF CALIFORNIA

4/24/2023

Site Name(s):
STRAUCH DRIVE
P.O.'s #: 9013484/
AGREEMENT 3002606
VFP Job #: 220742/DWG
Dash #: -001

TOLERANCES

ALL DIMENSIONS ARE IN INCHES UNLESS SPECIFIED OTHERWISE
STANDARD:
FRACTIONS ± 1/2"
DECIMALS ± 0.5"
ANGLES ± 3°
IF NOTED WITH SYMBOL: ▲
FRACTIONS ± 1/4"
DECIMALS ± 0.25"
ANGLES ± 1°
IF NOTED WITH SYMBOL: ⬢
FRACTIONS ± 1"
DECIMALS ± 1.0"
ANGLES ± 5°

VFP, INC.
CORPORATE OFFICE
5410 Fallowater Lane
Roanoke, Virginia 24018-0906
(540)977-0500 (540)977-5555 fax
MANUFACTURING FACILITY
402 Industrial Park Road
Duffield, Virginia 24244
(276)431-4000 (276)431-1756 fax

Except as may otherwise be provided by contract, these drawings and concepts are the sole property of VFP, Inc., they are issued in strict confidence, and shall not be reproduced in whole or part without the written permission of VFP, Inc.

DRAWN BY: F.JESSEE	DATE: 2/9/23
CHECKED BY: [signature]	DATE: 4/24/23
CHECKED BY:	DATE:

DO NOT SCALE DRAWING

SIZE	CAGE NO	REV
B		-

SCALE: NTS MODEL: 7070

TITLE: 12'0" x 16'0" x 9'1" LIGHTWEIGHT SHELTER

DRAWING NO. 207070

SHEET 1 or 6

NOTES:

1. RUN SHEATHING AS REQUIRED TO MINIMIZE BLOCKING NEEDED.
2. RUN "C" CHANNEL AT THE TOP AND BOTTOM OF ALL WALLS.
3. HOLD INTERIOR SHEATHING 1" UP FROM BOTTOM OF WALLS.
4. C-PAN WALL LAYOUT SHOWN WITH OPEN SIDE OF PANS UP.
5. SLOTS ARE REQUIRED IN PANS FOR TRACK.
6. TEXTURED TAN

APPROVED: STATE OF CA - CERTIFIED DAA

Based on the requirements of title 25 California code of regulations
Chapter 3 subchapter 2 Commercial Modular

Date: 04-25-2023 Expires: 07-31-2024

Approval # PFS: 23-002714

THIS APPROVAL DOES NOT AUTHORIZE OR APPROVE ANY OMISSION OR DEVIATION FROM THE REQUIREMENTS OF STATE LAWS OR APPLICABLE LOCAL ORDINANCES . THIS APPROVAL IS LIMITED TO FACTORY-BUILT PORTION ONLY.

PFS CORPORATION - Cottage Grove, WI

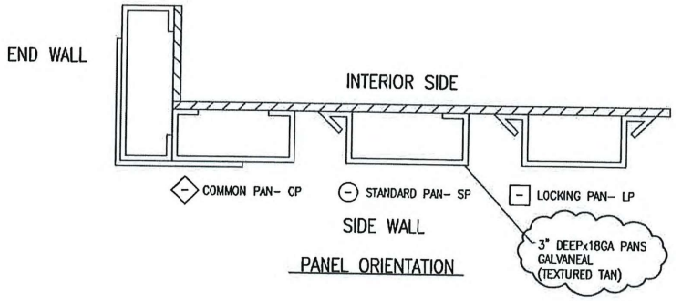

PANEL ORIENTATION

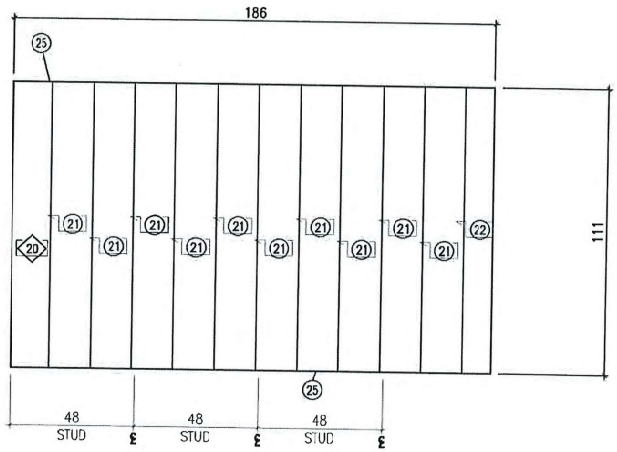

RIGHT WALL ELEVATION D

ITEM	QTY	DESCRIPTION
26	6	STUDS, 3 WIDE, x 108 LONG
25	8	TRACK, 1.75 x 2.875 x 3.062 x 144"
22	1	CP - 11.75 X 111 HIGH PAN (SPLIT PAN)
21	10	SP - 16 X 111 HIGH PAN
20	1	CP - 14.75 X 111 HIGH PAN

REVISIONS			
CHG. BY	APPR. BY	DATE	REV

REGISTERED PROFESSIONAL ENGINEER BRIAN K. YEE No. 46026 CIVIL STATE OF CALIFORNIA

4/24/2023

Site Name(s): STRAUCH DRIVE
P.O.'s #: 9013484/ AGREEMENT 3002603
VFP Job #: 220742/DWG
Dash #: -001

TOLERANCES

ALL DIMENSIONS ARE IN INCHES UNLESS SPECIFIED OTHERWISE
STANDARD:
FRACTIONS ± 1/2"
DECIMALS ± 0.5"
ANGLES ± 3°
IF NOTED WITH SYMBOL: ▲
FRACTIONS ± 1/4"
DECIMALS ± 0.25"
ANGLES ± 1°
IF NOTED WITH SYMBOL: ⬢
FRACTIONS ± 1"
DECIMALS ± 1.0"
ANGLES ± 5°

VFP, INC.

CORPORATE OFFICE
5410 Fallowater Lane
Roanoke, Virginia 24018-3908
(540)977-0500 (540)977-5555 fax

MANUFACTURING FACILITY
402 Industrial Park Road
Dufield, Virginia 24244
(276)431-4000 (276)431-1756 fax

Except as may otherwise be provided by contract, these drawings and concepts are the sole property of VFP, Inc., they are issued in strict confidence, and shall not be reproduced in whole or part without the written permission of VFP, Inc.

DRAWN BY: F.JESSEE	DATE: 2/9/23	
CHECKED BY: W Ellenberger	DATE: 4/24/23	
CHECKED BY:	DATE:	

DO NOT SCALE DRAWING

SIZE	CAGE NO	REV
B		-

SCALE: NTS MODEL: 7070

TITLE: 12'0" x 16'0" x 9'1" LIGHTWEIGHT SHELTER

DRAWING NO. 207070

SHEET 2 OF 6

RIGHT LONG WALL PANEL

NOTES:

1. RUN SHEATHING AS REQUIRED TO MINIMIZE BLOCKING NEEDED.
2. RUN "C" CHANNEL AT THE TOP AND BOTTOM OF ALL WALLS.
3. HOLD INTERIOR SHEATHING 1" UP FROM BOTTOM OF WALLS.
4. C-PAN WALL LAYOUT SHOWN WITH OPEN SIDE OF PANS UP.
5. SLOTS ARE REQUIRED IN PANS FOR TRACK.
6. TEXTURED TAN

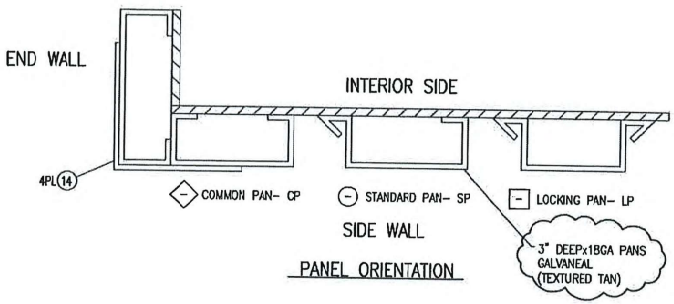

PANEL ORIENTATION

ITEM	QTY	DESCRIPTION
40	5	STUDS, 3 WIDE, x 108 LONG
39	8	TRACK, 1.75 x 2.875 x 3.062 x 144"
38	2	STIFFENER 2.75 x 1.5 x 110.75
36	2	OPENING CAP 1.5 x 1.5 x 3.062 x 40.375
34	1	CP - 13.875 X 111 HIGH PAN (SPLIT PAN)
33	5	SP - 16 X 111 HIGH PAN (REVERSED)
32	1	LP - 20.25 X 24.625 HIGH PAN
31	1	SP - 20.25 X 24.625 HIGH PAN
30	1	CP - 9.875 X 111 HIGH PAN

APPROVED: STATE OF CA - CERTIFIED DAA

Based on the requirements of title 25 California code of regulations
Chapter 3 subchapter 2 Commercial Modular

Date: 04-25-2023 Expires: 07-31-2024

Approval # PFS: 23-002714

THIS APPROVAL DOES NOT AUTHORIZE OR APPROVE ANY OMISSION OR DEVIATION FROM THE REQUIREMENTS OF STATE LAWS OR APPLICABLE LOCAL ORDINANCES . THIS APPROVAL IS LIMITED TO FACTORY-BUILT PORTION ONLY.

PFS CORPORATION - Cottage Grove, WI

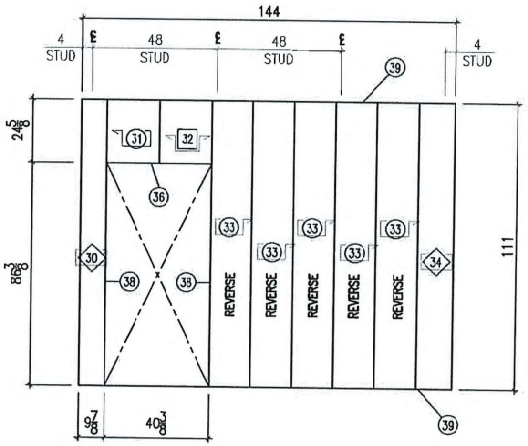

FRONT WALL ELEVATION A

FRONT SHORT WALL PANEL

REVISIONS

CHG. BY	APPR. BY	DATE	REV

REGISTERED PROFESSIONAL ENGINEER
BRIAN K. YEE
No. 40026
CIVIL
STATE OF CALIFORNIA

4/24/2023

Site Name(s):
STRAUCH DRIVE
P.O.'s #: 9013484/
AGREEMENT 3002606
VFP Job #: 220742/DWG
Dash #: -001

TOLERANCES

ALL DIMENSIONS ARE IN INCHES UNLESS SPECIFIED OTHERWISE
STANDARD:
FRACTIONS ± 1/2"
DECIMALS ± 0.5"
ANGLES ± 3°
IF NOTED WITH SYMBOL: ▲
FRACTIONS ± 1/4"
DECIMALS ± 0.25"
ANGLES ± 1°
IF NOTED WITH SYMBOL: ⬢
FRACTIONS ± 1"
DECIMALS ± 1.0"
ANGLES ± 5°

VFP, INC.
CORPORATE OFFICE
5410 Fallowater Lane
Roanoke, Virginia 240 18-0906
(540)977-6500 (540)977-5555 fax
MANUFACTURING FACILITY
402 Industrial Park Road
Dutfield, Virginia 24244
(276)431-4000 (276)431-1756 fax

Except as may otherwise be provided by contract, these drawings and concepts are the sole property of VFP, Inc., they are issued in strict confidence, and shall not be reproduced in whole or part without the written permission of VFP, Inc.

DRAWN BY: F.JESSEE		DATE: 2/9/23
CHECKED BY: [illegible]		DATE: 4/24/23
CHECKED BY:		DATE:

DO NOT SCALE DRAWING

SIZE	CAGE NO	REV
B		-

SCALE: NTS MODEL: 7070

TITLE: 12'0" x 16'0" x 9'1" LIGHTWEIGHT SHELTER

DRAWING NO.: 207070

SHEET: 3 OF 6

NOTES:

1. RUN SHEATHING AS REQUIRED TO MINIMIZE BLOCKING NEEDED.
2. RUN "C" CHANNEL AT THE TOP AND BOTTOM OF ALL WALLS.
3. HOLD INTERIOR SHEATHING 1" UP FROM BOTTOM OF WALLS.
4. C-PAN WALL LAYOUT SHOWN WITH OPEN SIDE OF PANS UP.
5. SLOTS ARE REQUIRED IN PANS FOR TRACK.
6. TEXTURED TAN

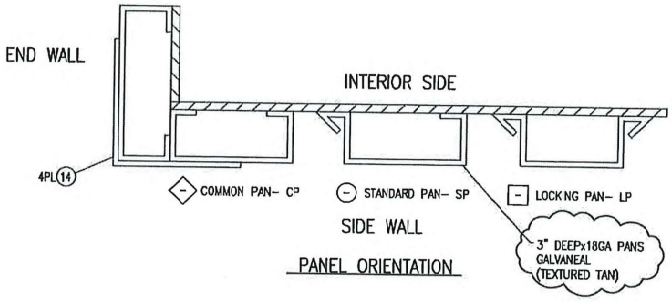

PANEL ORIENTATION

ITEM	QTY	DESCRIPTION
65	5	STUDS, 3 WIDE x 108 LONG
64	8	TRACK, 1.75 x 2.875 x 3.062 x 144"
63	2	STIFFENER 2.75 x 1.5 x 110.75
62	2	OPENING CAP 1.5 x 1.5 x 3.062 x 28.50
60	1	CP - 3.75 X 111 HIGH PAN
59	1	LP - 11.50 X 111 HIGH PAN
58	2	CP - 16 X 111 HIGH PAN
57	2	SP - 14.25 X 55.5 HIGH PAN (1 REVERSED)
56	2	LP - 14.75 X 55.5 HIGH PAN
55	2	SP - 14.25 X 17.5 HIGH PAN (1 REVERSED)
54	2	LP - 14.75 X 17.5 HIGH PAN
53	2	SP - 14.25 X 15 HIGH PAN (1 REVERSED)
52	2	LP - 14.25 X 15 HIGH PAN
51	2	SP - 16 X 111 HIGH PAN (1 REVERSED)
50	1	CP - 3.75 X 111 HIGH PAN (SPLIT PAN)

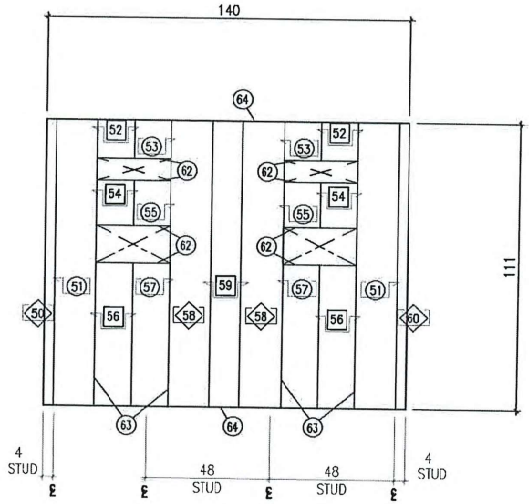

REAR WALL ELEVATION C

APPROVED: STATE OF CA - CERTIFIED DAA

Based on the requirements of title 25 California code of regulations
Chapter 3 subchapter 2 Commercial Modular

Date: 04-25-2023 Expires: 07-31-2024

Approval # PFS: 23-002714

THIS APPROVAL DOES NOT AUTHORIZE OR APPROVE ANY OMISSION OR DEVIATION FROM THE REQUIREMENTS OF STATE LAWS OR APPLICABLE LOCAL ORDINANCES . THIS APPROVAL IS LIMITED TO FACTORY-BUILT PORTION ONLY.

PFS CORPORATION - Cottage Grove, WI

REAR SHORT WALL PANEL

REVISIONS			
CHG. BY	APPR. BY	DATE	REV

REGISTERED PROFESSIONAL ENGINEER
BRANDON K. YEE
No. 46026
CIVIL
STATE OF CALIFORNIA

4/24/2023

Site Name(s):
STRAUCH DRIVE
P.O.'s #: 9013484/
AGREEMENT 3002606
VFP Job #: 220742/DWG
Dash #: -001

TOLERANCES

ALL DIMENSIONS ARE IN INCHES UNLESS SPECIFIED OTHERWISE
STANDARD:
FRACTIONS ± 1/2"
DECIMALS ± 0.5"
ANGLES ± 3°
IF NOTED WITH SYMBOL:
▲ FRACTIONS ± 1/4"
DECIMALS ± 0.25"
ANGLES ± 1°
IF NOTED WITH SYMBOL:
⬣ FRACTIONS ± 1"
DECIMALS ± 1.0"
ANGLES ± 5°

VFP, INC.
CORPORATE OFFICE
5410 Fallowater Lane
Roanoke, Virginia 24018-0908
(540)977-0500 (540)977-5555 fax
MANUFACTURING FACILITY
402 Industrial Park Road
Dufield, Virginia 24244
(276)431-4000 (276)431-1756 fax

Except as may otherwise be provided by contract, these drawings and concepts are the sole property of VFP, Inc., they are issued in strict confidence, and shall not be reproduced in whole or part without the written permission of VFP, Inc.

DRAWN BY: F.JESSEE		DATE: 2/9/23
CHECKED BY: W.Riley		DATE: 4/24/23
CHECKED BY:		DATE:

DO NOT SCALE DRAWING

SIZE	CAGE NO	REV
B		-

SCALE: NTS MODEL: 7070

TITLE: 12'0" x 16'0" x 9'1" LIGHTWEIGHT SHELTER

DRAWING NO. 207070

SHEET 4 OF 6

NOTES:

1. START SHEATHING AT THIS END.
2. ADD STUD AT SHEATHING SEAMS AS REQUIRED.

INTERIOR SIDE

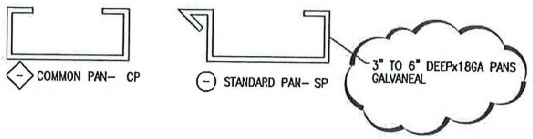

ITEM	QTY	DESCRIPTION (ROOF)
109	–	
108	–	
107	–	
106	–	
105	–	
104	2	TRACK, 1.75 x 2.75 x 3.125 x 144
103	2	TRACK, 1.75 x 2.75 x 6.125 x 144
102	4	STUD, 3 WIDE x 144.375 LONG
101	15	SP – 12 x 144.375 LONG ROOF PANEL
100	1	CP – 12.375 x 144.375 LONG ROOF PANEL (SPLIT PAN)

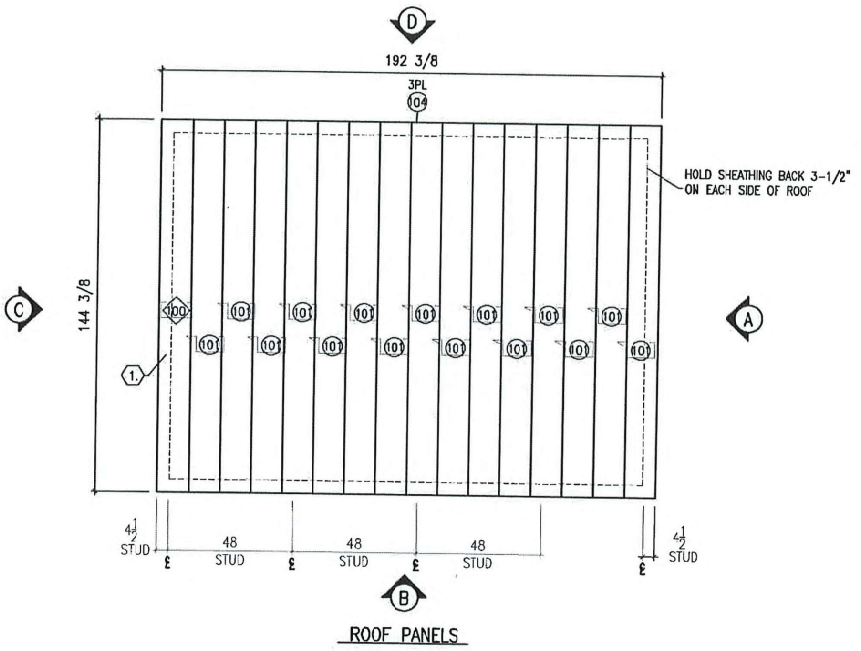

ROOF PANELS

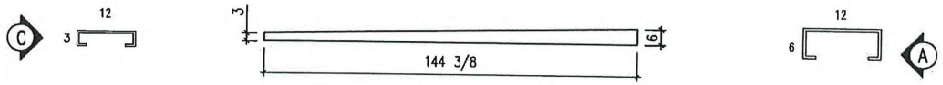

J ROOF ASSEMBLY

APPROVED: STATE OF CA - CERTIFIED DAA

Based on the requirements of title 25 California code of regulations
Chapter 3 subchapter 2 Commercial Modular

Date: 04-25-2023 Expires: 07-31-2024

Approval # PFS: 23-002714

THIS APPROVAL DOES NOT AUTHORIZE OR APPROVE ANY OMISSION OR DEVIATION FROM THE REQUIREMENTS OF STATE LAWS OR APPLICABLE LOCAL ORDINANCES . THIS APPROVAL IS LIMITED TO FACTORY-BUILT PORTION ONLY.

PFS CORPORATION - Cottage Grove, WI

REVISIONS			
CHC. BY	APPR. BY	DATE	REV

REGISTERED PROFESSIONAL ENGINEER BRIAN K. YEE No. 40026 CIVIL STATE OF CALIFORNIA

4/24/2023

Site Name(s): STRAUCH DRIVE
P.O.'s #: 9013484/ AGREEMENT 3002606
VFP Job #: 220742/DWG
Dash #: –001

TOLERANCES

ALL DIMENSIONS ARE IN INCHES UNLESS SPECIFIED OTHERWISE
STANDARD:
FRACTIONS ± 1/2"
DECIMALS ± 0.5"
ANGLES ± 3°
IF NOTED WITH SYMBOL: ▲
FRACTIONS ± 1/4"
DECIMALS ± 0.25"
ANGLES ± 1°
IF NOTED WITH SYMBOL: ⬢
FRACTIONS ± 1"
DECIMALS ± 1.0"
ANGLES ± 5°

VFP, INC.
CORPORATE OFFICE
5410 Fallowater Lane
Roanoke, Virginia 24018-6906
(540)977-0500 (540)977-5555 fax
MANUFACTURING FACILITY
402 Industrial Park Road
Dutfield, Virginia 24244
(276)431-4000 (276)431-1756 fax

Except as may otherwise be provided by contract, these drawings and concepts are the sole property of VFP, Inc., they are issued in strict confidence, and shall not be reproduced in whole or part without the written permission of VFP, Inc.

DRAWN BY	DATE
F.JESSEE	2/9/23
CHECKED BY:	DATE:
CHECKED BY	DATE

DO NOT SCALE DRAWING

SIZE	CAGE NO	REV
B		–

SCALE	MODEL
NTS	7070

TITLE: 12'0" x 16'0" x 9'1" LIGHTWEIGHT SHELTER

DRAWING NO. 207070

SHEET 5 OF 6

ROOF PLAN

ITEM	QTY	DESCRIPTION
209	12	HURRICANE CLIP DWG# 178113-300
205	8	5 x 120 FLASHNG
202	1	STANDARD PANEL, 6.375 X 144.75 LONG
201	9	STANDARD PANEL, 20 X 144.75 LONG
200	1	STARTER COMMON PANEL, 6.375 X 144.75 LONG

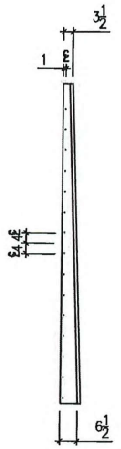

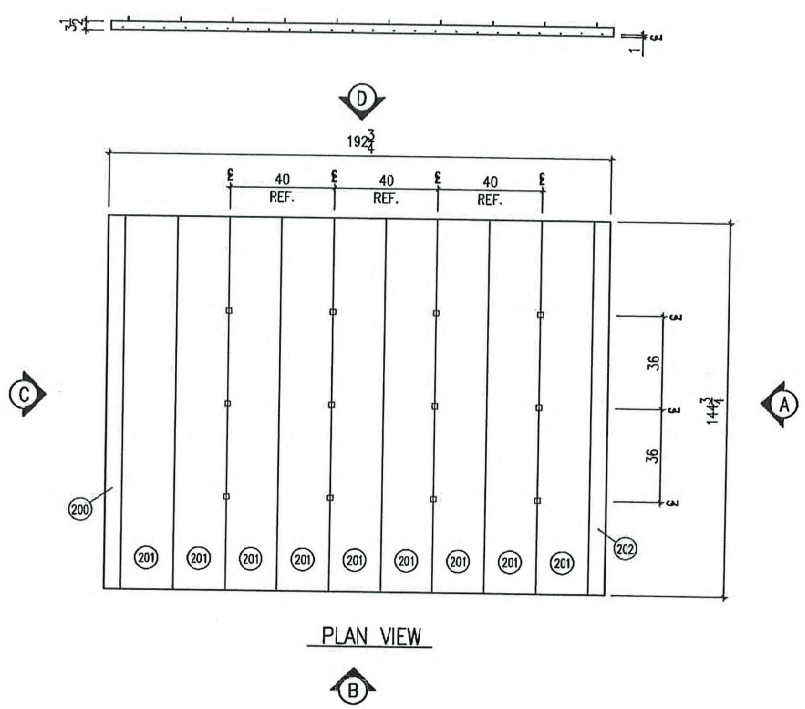

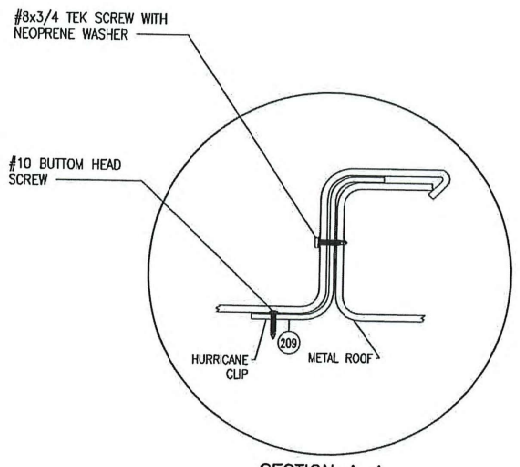

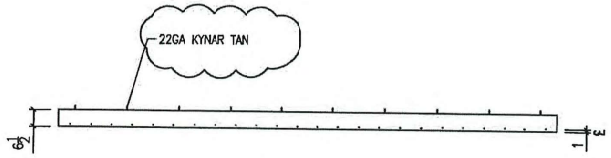

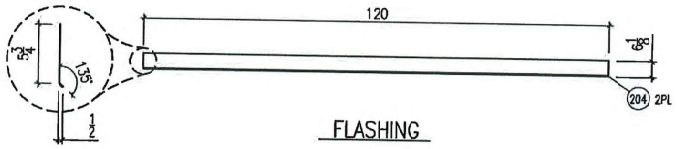

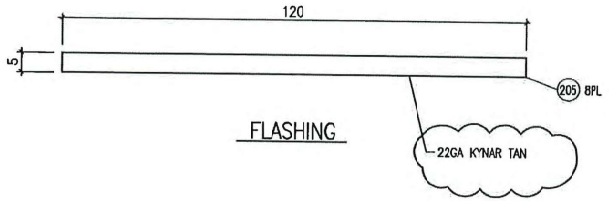

APPROVED: STATE OF CA - CERTIFIED DAA

Based on the requirements of title 25 California code of regulations
Chapter 3 subchapter 2 Commercial Modular

Date: 04-25-2023 Expires: 07-31-2024

Approval # PFS: 23-002714

THIS APPROVAL DOES NOT AUTHORIZE OR APPROVE ANY OMISSION OR DEVIATION FROM THE REQUIREMENTS OF STATE LAWS OR APPLICABLE LOCAL ORDINANCES . THIS APPROVAL IS LIMITED TO FACTORY-BUILT PORTION ONLY.

PFS CORPORATION - Cottage Grove, WI

STANDING SEAM ROOF

REVISIONS			
CHG. BY	APPR. BY	DATE	REV

REGISTERED PROFESSIONAL ENGINEER BRIAN K. YEE Brian Yee No. 40016 CIVIL STATE OF CALIFORNIA

4/24/2023

Site Name(s): STRAUCH DRIVE
P.O.'s #: 9013484/ AGREEMENT 3002606
VFP Job #: 220742/DWG
Dash #: -001

TOLERANCES

ALL DIMENSIONS ARE IN INCHES UNLESS SPECIFIED OTHERWISE

STANDARD:		
	FRACTIONS	± 1/2"
	DECIMALS	± 0.5"
	ANGLES	± 3°
IF NOTED WITH SYMBOL: ▲		
	FRACTIONS	± 1/4"
	DECIMALS	± 0.25"
	ANGLES	± 1°
IF NOTED WITH SYMBOL: ⬢		
	FRACTIONS	± 1"
	DECIMALS	± 1.0"
	ANGLES	± 5°

VFP, INC.
CORPORATE OFFICE
5410 Fallowater Lane
Roanoke, Virginia 24018-6906
(540)977-0500 (540)977-5555 fax
MANUFACTURING FACILITY
402 Industrial Park Road
Dufield, Virginia 24244
(276)431-4000 (276)431-1756 fax

Except as may otherwise be provided by contract, these drawings and concepts are the sole property of VFP, Inc., they are issued in strict confidence, and shall not be reproduced in whole or part without the written permission of VFP, Inc.

DRAWN BY: F.JESSEE	DATE: 2/9/23
CHECKED BY: [signature]	DATE: 4/24/23
CHECKED BY:	DATE:
DO NOT SCALE DRAWING	
SIZE: B	CAGE NO: REV: -
SCALE: NTS	MODEL: 7070
TITLE: 12'0" x 16'0" x 9'1" LIGHTWEIGHT SHELTER	
DRAWING NO.: 207070	
SHEET: 6 OF 6	

ITEM	QTY.	U/N	PART NO.	DESCRIPTION
CONCRETE	1.5	YDS	30-0012-002	FIBER REINFORCED LIGHTWEIGHT CONCRETE NIX
WWF	161	SF	30-0141-001	WELDED WIRE FABRIC W4 x W4 4/4

BILL OF MATERIAL — FLOOR

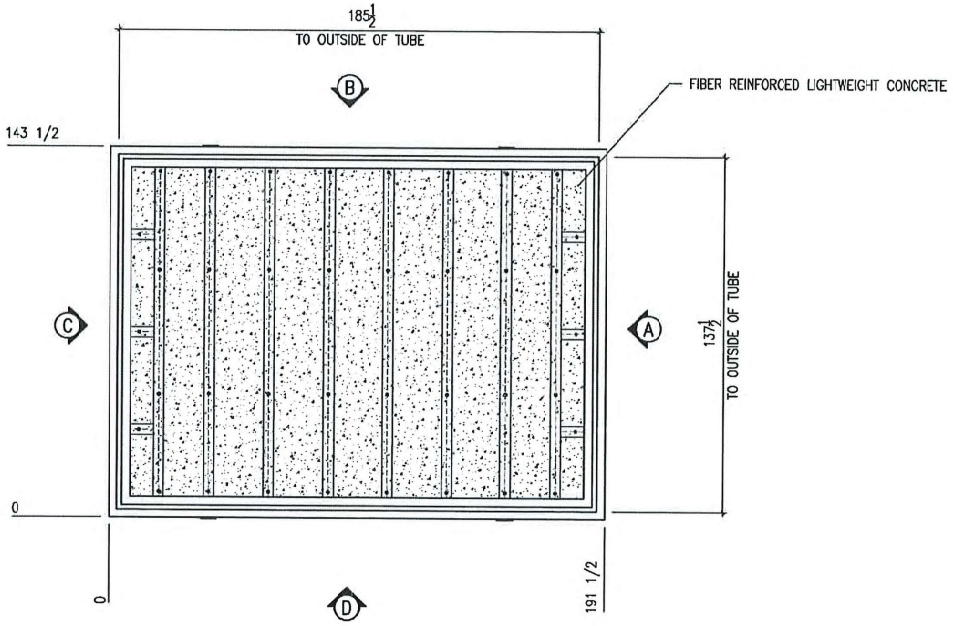

PLAN VIEW

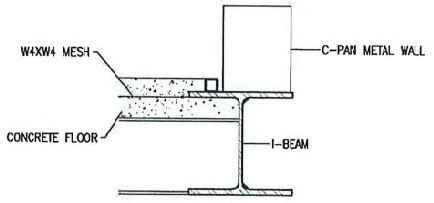

WELD THE FLAT PLATE TO THE TOP OF THE I-BEAM AND THEN WELD BOTH THE SIDES AND THE TOP TO THE WALL WELD PLATE.

APPROVED: STATE OF CA - CERTIFIED DAA

Based on the requirements of title 25 California code of regulations
Chapter 3 subchapter 2 Commercial Modular

Date: 04-25-2023 Expires: 07-31-2024

Approval # PFS: 23-002714

THIS APPROVAL DOES NOT AUTHORIZE OR APPROVE ANY OMISSION OR DEVIATION FROM THE REQUIREMENTS OF STATE LAWS OR APPLICABLE LOCAL ORDINANCES . THIS APPROVAL IS LIMITED TO FACTORY-BUILT PORTION ONLY.

PFS CORPORATION - Cottage Grove, WI

REVISIONS			
CHG. BY	APPR. BY	DATE	REV

REGISTERED PROFESSIONAL ENGINEER — BRIAN K. YEE — No. 40004 — CIVIL — STATE OF CALIFORNIA

3/16/2023

TOLERANCES

ALL DIMENSIONS ARE IN INCHES UNLESS SPECIFIED OTHERWISE
STANDARD:
FRACTIONS ± 1/2"
DECIMALS ± 0.5"
ANGLES ± 3°
IF NOTED WITH SYMBOL: ▲
FRACTIONS ± 1/4"
DECIMALS ± 0.25"
ANGLES ± 1°
IF NOTED WITH SYMBOL: ⬢
FRACTIONS ± 1"
DECIMALS ± 1.0"
ANGLES ± 5°

VFP, INC.
CORPORATE OFFICE
5410 Fallowater Lane
Roanoke, Virginia 24013-0906
(540)977-0500 (540)977-5555 fax
MANUFACTURING FACILITY
402 Industrial Park Road
Duffield, Virginia 24244
(276)431-4000 (276)431-1756 fax

Except as may otherwise be provided by contract, these drawings and concepts are the sole property of VFP, Inc., they are issued in strict confidence, and shall not be reproduced in whole or part without the written permission of VFP, Inc.

DRAWN BY: F.JESSEE	DATE: 2/7/23
CHECKED BY:	DATE: 2/14/23
CHECKED BY:	DATE:
DO NOT SCALE DRAWING	
SIZE: B	CAGE NO: REV: -
SCALE: NTS	MODEL: 7070
TITLE: 12'0" x 16'0" x 9'1" CONCRETE SHELTER	
DRAWING NO.: 207070	
SHEET: F1 OF 1	

FLOOR PLAN

NOTES

1. USE ASTM A992 STRUCTURAL GRADE STEEL OR BETTER.
2. WELDS SHALL BE PERFORMED BY WELDER CERTIFIED PER AMERICAN WELDING SOCIETY (AWS) D1.1, SECTION 5, PART C.
3. ELECTRODE MATERIAL SHALL COMPLY WITH AWS D1.1, SECTION 4.5 FOR SHIELDED METAL ARC WELDING, AND 4.12 FOR GAS METAL ARC WELDING.
4. MARK SKID WITH COMPLETE PART NUMBER USING AN INDELIBLE MARKER TO FORM 1.0" HIGH (MINIMUM) LETTERS.
5. SKID TO BE SP3 CLEANED, PRIME & PAINTED – AC TAN
6. SEE SHEET 2 FOR DETAILS.

QTY	DESCRIPTION		ITEM
			8
			7
78	NELSON STUD, 1/2 x 2	VIEW C-C	6
8	PLATE, A/R x A/R x .75	DETAIL #2	5
8	PLATE, 3/4" x 6" x 7.13" STEEL BAR	DETAIL #1	4
AR	TUBE, 1" x 1" x 11 GA.	VIEW D-D	3
12	I-BEAM W6 x 9		2
4	I-BEAM W8 x 31		1
2	PLATE, A/R x A/R x .5	DETAIL #3	8

SIDE VIEW

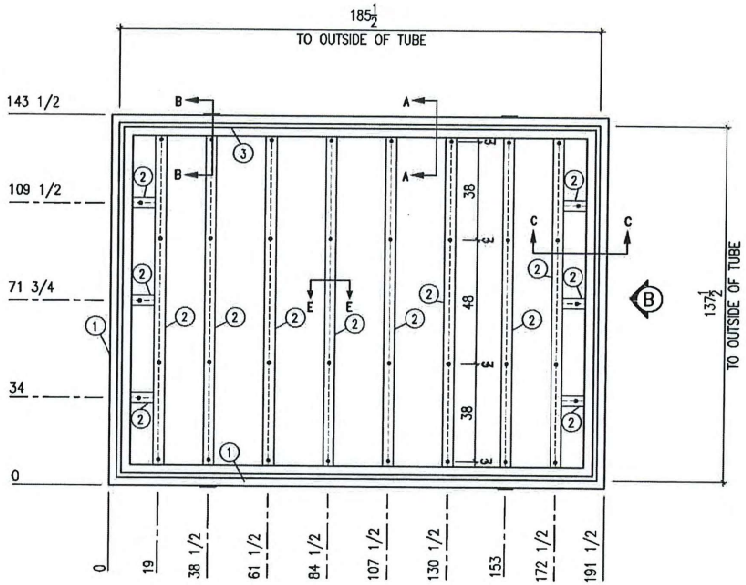

PLAN VIEW

FRONT VIEW

APPROVED: STATE OF CA - CERTIFIED DAA

Based on the requirements of title 25 California code of regulations
Chapter 3 subchapter 2 Commercial Modular

Date: 04-25-2023 Expires: 07-31-2024

Approval # PFS: 23-002714

THIS APPROVAL DOES NOT AUTHORIZE OR APPROVE ANY OMISSION OR DEVIATION FROM THE REQUIREMENTS OF STATE LAWS OR APPLICABLE LOCAL ORDINANCES . THIS APPROVAL IS LIMITED TO FACTORY-BUILT PORTION ONLY.

PFS CORPORATION - Cottage Grove, WI

REVISIONS			
CHG. BY	APPR. BY	DATE	REV

REGISTERED PROFESSIONAL ENGINEER
BRIAN K. YEE
No. 46026
CIVIL
STATE OF CALIFORNIA
4/24/2023

TOLERANCES

ALL DIMENSIONS ARE IN INCHES
UNLESS SPECIFIED OTHERWISE
STANDARD:
FRACTIONS ± 1/2"
DECIMALS ± 0.5"
ANGLES ± 3°
IF NOTED WITH SYMBOL:
▲ FRACTIONS ± 1/4"
DECIMALS ± 0.25"
ANGLES ± 1°
IF NOTED WITH SYMBOL:
⬢ FRACTIONS ± 1"
DECIMALS ± 1.0"
ANGLES ± 5°

VFP, INC.

CORPORATE OFFICE
5410 Fallowater Lane
Roanoke, Virginia 24018-8906
(540)977-0500 (540)977-5555 fax

MANUFACTURING FACILITY
402 Industrial Park Road
Duffield, Virginia 24244
(276)431-4000 (276)431-1756 fax

Except as may otherwise be provided by contract, these drawings and concepts are the sole property of VFP, Inc., they are issued in strict confidence, and shall not be reproduced in whole or part without the written permission of VFP, Inc.

DRAWN BY: F.JESSEE	DATE: 2/7/23
CHECKED BY:	DATE: 4/24/23
CHECKED BY	DATE
DO NOT SCALE DRAWING	
SIZE: B	CAGE NO	REV: –
SCALE: NTS	MODEL: 7070
TITLE: 12'0" x 16'0" x 9'1" CONCRETE SHELTER	
DRAWING NO: 40-0332-7070	
SHEET: 1 OF 2	

SKID FLOOR

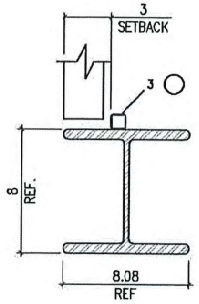

VIEW A–A
(W8x31)

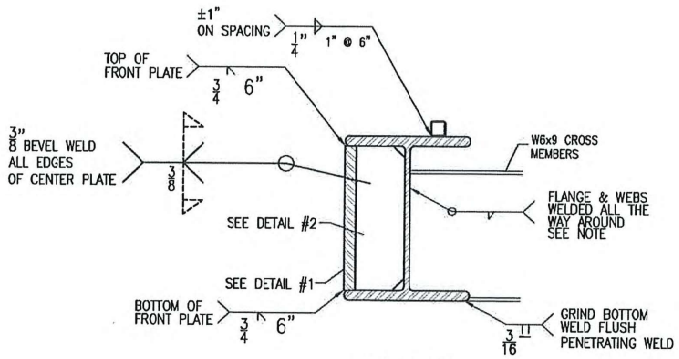

VIEW B–B
(W8x31)

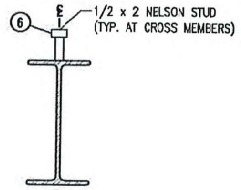

VIEW E–E
(W6x9)

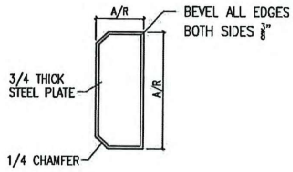

DETAIL #2
(4 PL)

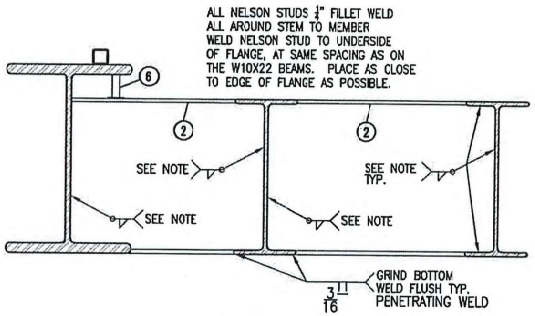

VIEW C–C
(THIS APPLIES TO THE END I–BEAMS ONLY)

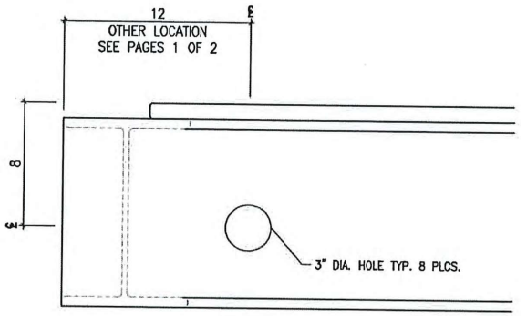

DETAIL #3

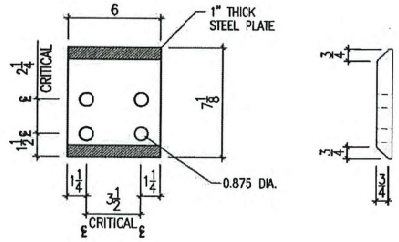

DETAIL #1
(4 PL)

NOTES:
1. ALL BEAMS TO HAVE FILLET WELDS, FILLET WELDS TO BE THE SAME THICKNESS AS THE WEB OF BEAMS.
2. WELDED BOTH SIDES. COPE NOTCH ALL BEAMS. COPE FLANGES USE PENETRATING FLAT WELD.
3. GENERAL TOLERANCES ARE NOT APPLIED TO WELDS.

APPROVED: STATE OF CA - CERTIFIED DAA

Based on the requirements of title 25 California code of regulations
Chapter 3 subchapter 2 Commercial Modular

Date: 04-25-2023 Expires: 07-31-2024

Approval # PFS: 23-002714

THIS APPROVAL DOES NOT AUTHORIZE OR APPROVE ANY OMISSION OR DEVIATION FROM THE REQUIREMENTS OF STATE LAWS OR APPLICABLE LOCAL ORDINANCES . THIS APPROVAL IS LIMITED TO FACTORY-BUILT PORTION ONLY.

PFS CORPORATION - Cottage Grove, WI

SKID FLOOR DETAIL

REVISIONS			
CHC. BY	APPR. BY	DATE	REV

REGISTERED PROFESSIONAL ENGINEER
BRIAN K. YEE
No. 40026
CIVIL
STATE OF CALIFORNIA
4/24/2023

TOLERANCES

ALL DIMENSONS ARE IN INCHES UNLESS SPECIFIED OTHERWISE
STANDARD:
FRACTIONS ± 1/2"
DECIMALS ± .5"
ANGLES ± 3°
IF NOTED WITH SYMBOL:
▲ FRACTIONS ± 1/4"
DECIMALS ± .25"
ANGLES ± 1°
IF NOTED WITH SYMBOL:
⬢ FRACTIONS ± 1"
DECIMALS ± 1.0"
ANGLES ± 5°

VFP, INC.

CORPORATE OFFICE
540 Fallowater Lane
Roanoke, Virginia 24018-0906
(540)977-0500 (540)977-5555 fax

MANUFACTURING FACILITY
402 Industrial Park Road
Dublield, Virginia 24244
(276)431-4000 (276)431-1756 fax

Except as may otherwise be provided by contract, these drawings and concepts are the sole property of VFP, Inc., they are issued in strict confidence, and shall not be reproduced in whole or part without the written permission of VFP, Inc.

DRAWN BY: F.JESSEE		DATE: 2/7/23
CHECKED BY:		DATE: 4/24/23
CHECKED BY		DATE

DO NOT SCALE DRAWING

SIZE	CAGE NO	REV
B		-

SCALE	MODEL
NTS	7070

TITLE: 12'0" x 16'0" x 9'1" CONCRETE SHELTER

DRAWING NO: 40-0332-7070

SHEET: 2 OF 2

NOTES:

1. GENERAL
   - 1.1 All dimensions are specified in inches unless otherwise noted.
   - 1.2 Design and installation of foundation by local engineer or architect. This is only a suggested foundation plan.
   - 1.3 Foundation is designed for 2000 psf bearing. However, it is the customer's responsibility to verify the adequacy of the foundation from soil boring data.
   - 1.4 Slab type foundation is not recommended for areas with extreme frost conditions or where high water tables are present. These conditions could cause differential settlements in the soil beneath the foundation resulting in structural cracks.
   - (1.5) Perimeter footing must be a minimum foundation depth of 24" or per local frost line on undisturbed soil.
   - 1.6 Locate wedge anchors after shelter is located on slab to correctly align with installed anchor plate. Do not install wedge anchor before setting shelter on foundation.
   - (1.7) Ground all structrol steel in foundation per local codes.
2. MATERIAL
   - 2.1 Concrete shall have a minimum compressive strength of 3000 psi @ 28 days and shall be installed in accordance with the ACI-318 Building Code requirements for Reinforced Concrete.
   - 2.2 Reinforcing bars shall conform to ASTM-A615 grade 60 specifications and be detailed in accordance with ACI-318
   - 2.3 Test cylinders shall be molded and labortory cured in accordance with ASTM C31. Three cylinders shall be taken for each day's concrete placement. Cylinders shall be tested in accordance with ASTM C39.
3. TOLERANCES
   - 3.1 Tops of concrete foundation must be within 0.02"per foot of elevation specified by the customer.

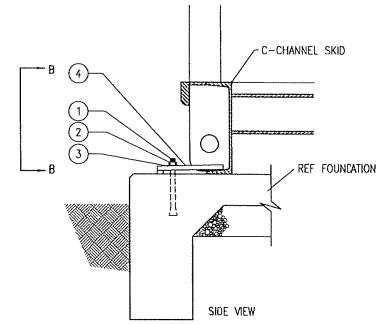

A **BUILDING ATTACHMENT** FIELD WORK

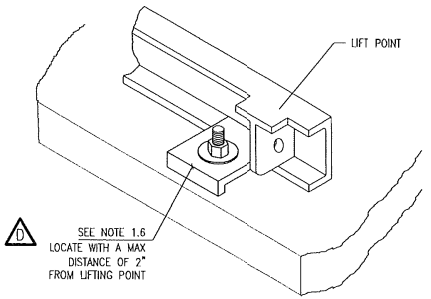

B **TIE DOWN PLATE** FIELD WORK

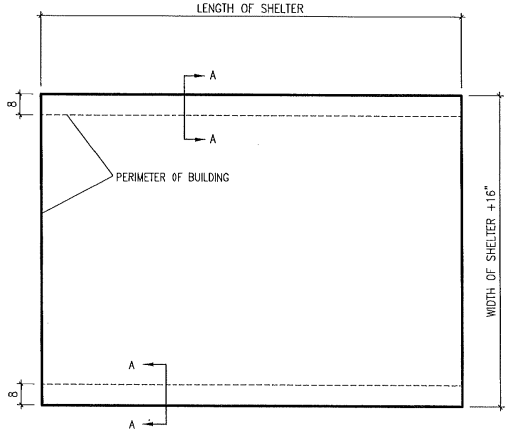

C **FOUNDATION PLAN** FIELD WORK

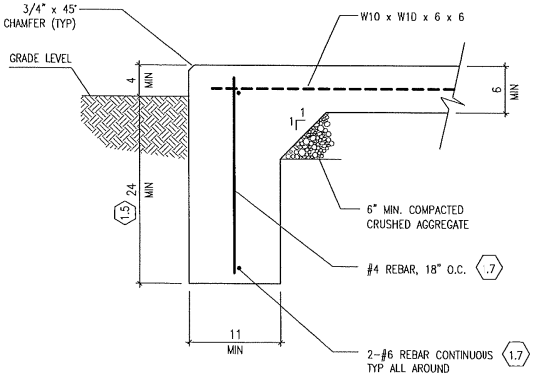

D **CONTINUOUS PERIMETER FOOTING** FIELD WORK

APPROVED: STATE OF CA - CERTIFIED DAA

Based on the requirements of title 25 California code of regulations
Chapter 3 subchapter 2 Commercial Modular

Date: 04-25-2023 Expires: 07-31-2024

Approval # PFS: 23-002714

THIS APPROVAL DOES NOT AUTHORIZE OR APPROVE ANY OMISSION OR DEVIATION FROM THE REQUIREMENTS OF STATE LAWS OR APPLICABLE LOCAL ORDINANCES . THIS APPROVAL IS LIMITED TO FACTORY-BUILT PORTION ONLY.

PFS CORPORATION - Cottage Grove, WI

EXAMPLE: 272022- 096 40

WIDTH IN INCHES

LENGTH IN FEET

ITEM NO.	DESCRIPTION	PART NO.	UNIT OF MEASURE	QTY.
4	ANCHOR PLATE	1012B3-003	EA	4
3	FLAT WASHER, 3/4	165005-009	EA	4
2	HEX NUT, 3/4-10	165032-002	EA	4
1	WEDGE ANCHOR, 3/4-10 x 6 1/4	34464	EA	4

REVISIONS

CHG. BY	APPR. BY	DATE	REV
FPW	SRS	03/14/02	A
UPDATED STANDARDS.			
FPW	SRS	06/23/04	B
UPDATED STANDARDS.			
RJG	SRS	10/10/05	C
ADDED NOTE 1.7 GROUNDING			
BAS		1/12/10	D
UPDATED DETAIL "B"			

REGISTERED PROFESSIONAL ENGINEER
BRIAN A. YEE
No. 42[illegible]
CIVIL
STATE OF CALIFORNIA

3/16/2023

VFP, INC.

CORPORATE OFFICE
176 EastPark Drive
Roanoke, Virginia 24019
(540)977-0500 (540)977-5555 fax

CONCRETE SHELTERS (PLANT #2)
4954 Industrial Park
Duffield, Virginia 24244
(276)431-4000 (276)431-4220 fax

Except as may otherwise be provided by contract, these drawings and concepts are the sole property of VFP, Inc., they are issued in strict confidence, and shall not be reproduced in whole or part without the written permission of VFP, Inc.

DRAWN BY	B. A. BOTKIN	DATE	05/29/98
CHECKED BY		DATE	
APPROVED BY	S. SHUMATE	DATE RELEASED	06/12/98
DO NOT SCALE DRAWING			
SIZE	B	CAGE NO. 53223	REV D
SCALE	1/4"=1'0"	MODEL	-

TITLE
SLAB FOUNDATION
STANDARD LIGHTWEIGHT
FLAT TIE-DOWN

DRAWING NO. 272022

SHEET 1 or 1

VFP Technical Bulletin for Lightweight Shelters

Sitework - shelter placement

You will need:

① – [8 ea] Lifting slings, sized per the weight and height of the shelter.
② – [2 ea] Spreader beams a minimum of 12" wider than the shelter roof. Sized per the weight of the shelter.
③ – [4 ea] Shackle (horseshoe type) sized per the weight of the shelter.

CAUTION: FOR PERSONNEL SAFETY, USE ONLY OSHA RATED RIGGING AND HARDWARE

1 PLACEMENT INSTRUCTIONS

1. Foundation designed and installed under the supervision of the site engineer should be in place.
2. Locate the four (4) lifting cavities on the shelter skid, two under each longwall.
3. Loop shackle through lifting points. See figure 2
4. Configure rigging as shown in the figure 3.

CAUTION: THE FOLLOWING INSTRUCTIONS ARE FOR EXPERIENCED RIGGERS ONLY; ALL OTHERS STAND CLEAR OF CRANE OPERATORS TO AVOID INJURY OR DEATH

2 RIGGING

CAUTION: VERIFY SHELTER WEIGHT AND SAFE WORKING LOADS OF HARDWARE AND RIGGING BEFORE PROCEEDING

5. Attach rigging to crane.
   a. – Configure rigging vertically to lateral spreader bars as shown in figure 3 at right. Spreader beams must be wider than roof.
   b. – Lift shelter a few inches and make sure it is picking level. If not, lower and adjust rigging as needed to pick shelter as level as possible.
6. Lift shelter from trailer and position over foundation. Shelter should be centered on foundation.

CAUTION: SET SHELTER FLAT AND SQUARE TO PREVENT PHYSICAL DAMAGE TO SHELTER

7. Carefully lower onto foundation, ensuring that all four corners are level and shelter sets squarely.
8. Disconnect rigging, remove shackles.

NOTE

Any rigging other than that listed and shown above must be approved by VFP,INC. Engineering Department prior to lifting of shelter or contractor accepts all responsibility.

1

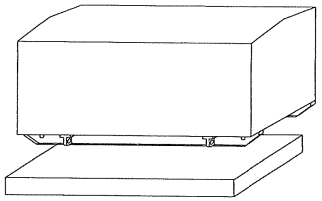

2

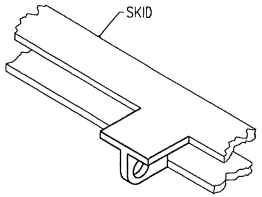

3

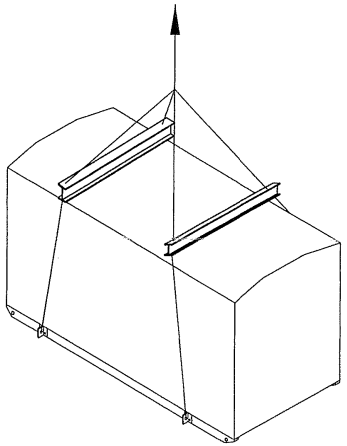

VFP Technical Bulletin for Lightweight Shelters

Sitework - shelter wedge tiedown

In packing (inside shelter), Find....

– [4 ea] 101283-003 wedge anchor plate
– [4 ea] hex head nuts, 3/4-10
– [4 ea] flat washer, 3/4
– [4 ea] 3/4-10 x 6-1/4 anchor bolts

CAUTION: MAKE SURE SHELTER IS CENTER IN BOTH DIRECTIONS ON FOUNDATION

1 WEDGE PLATE INSTALLATION

a. Shelter shoulc be in place [see technicol bulletin: Sitework – shelter placement to left]
b. Place 101283-003 anchor plate to the inside of lift plates (located on shelter base frame). Mark hole thru the plate on the slab, ther remove plate.
c. Drill a ¾" dia. hole at the marked locotion of each anchor plate. Drill hole a minimum of 4" deep and a maximum of 4½" deep.
d. Clean debris from hole.
e. Place anchor tie-down plate in place and line-up holes.
f. Assemble the washer and nut onto the anchor. Then push through the hole in the anchor plate.
g. Set anchor wth a hard hit on end with a hammer.
h. Expand anchor by tightening nut 3 to 5 turns.

APPROVED: STATE OF CA - CERTIFIED DAA
Based on the requirements of title 25 California code of regulations
Chapter 3 subchapter 2 Commercial Modular
Date: 04-25-2023 Expires: 07-31-2024
Approval # PFS: 23-002714
THIS APPROVAL DOES NOT AUTHORIZE OR APPROVE ANY OMISSION OR DEVIATION FROM THE REQUIREMENTS OF STATE LAWS OR APPLICABLE LOCAL ORDINANCES . THIS APPROVAL IS LIMITED TO FACTORY-BUILT PORTION ONLY.
PFS CORPORATION - Cottage Grove, WI

1

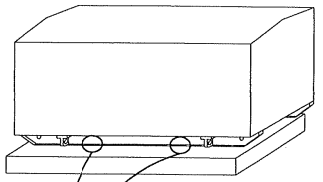

2

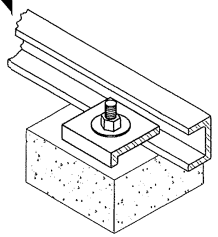

3

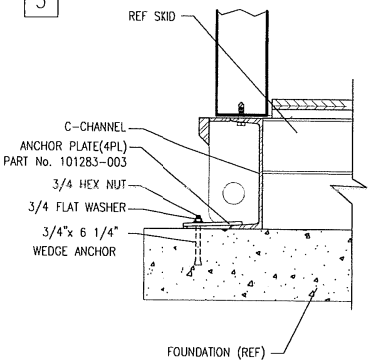

SIDE VIEW

REVISIONS			
CHG. BY	APPR. BY	DATE	REV
FPW	SRS	04/01/02	A
UPDATED STANDARDS.			
DE	[illegible]	11/24/03	B
UPDATED STANDARDS			

REGISTERED PROFESSIONAL ENGINEER
BRIAN A. YEE
No. 40016
CIVIL
STATE OF CALIFORNIA
3/16/2023

VFP, INC.
CORPORATE OFFICE
176 EastPark Drive
Roanoke, Virginia 24019
(540)977-0500 (540)977-5555 fax

CONCRETE SHELTERS (PLANT #2)
4954 Industriol Park
Duffield, Virginio 24244
(276)431-4000 (276)431-4220 fax

Except as may otherwise be provided by contract, these drawings and concepts are the sole property of VFP, Inc., they are issued in strict confidence, and shall not be reproduced in whole or part without the written permission of VFP, Inc.

DRAWN BY: S.SHUMATE	DATE: 01/04/02
CHECKED BY: S.SHUMATE	DATE: 02/13/02
APPROVED BY: S.SHUMATE	DATE RELEASED: 02/13/02
DO NOT SCALE DRAWING	
SIZE: B	CAGE NO: 53223 REV: B
SCALE: 1/4"=1'0"	MODEL: –

TITLE: SETUP INSTRUCTIONS FOR LIGHTWEIGHT SHLT TO 36FT SKID FL/WEDGE PLATE

DRAWING NO. 277029

SHEET 1 OF 1

TEXT OF AB 626

Assembly Bill No. 626

CHAPTER 810

An act to add and repeal Section 9204 of the Public Contract Code, relating to public contracts.

[Approved by Governor September 29, 2016. Filed with Secretary of State September 29, 2016.]

LEGISLATIVE COUNSEL'S DIGEST

AB 626, Chiu. Public contracts: claim resolution.

Existing law prescribes various requirements regarding the formation, content, and enforcement of state and local public contracts. Existing law applicable to state public contracts generally requires that the resolution of claims related to those contracts be subject to arbitration. Existing law applicable to local agency contracts prescribes a process for the resolution of claims related to those contracts of $375,000 or less.

This bill would establish, for contracts entered into on or after January 1, 2017, a claim resolution process applicable to any claim by a contractor in connection with a public works project. The bill would define a claim as a separate demand by the contractor for one or more of the following: a time extension for relief from damages or penalties for delay, payment of money or damages arising from work done pursuant to the contract for a public work, or payment of an amount disputed by the public entity, as specified.

This bill would require a public entity, defined to exclude certain state entities, upon receipt of a claim sent by registered or certified mail, to review it and, within 45 days, provide a written statement identifying the disputed and undisputed portions of the claim. The bill would authorize the 45-day period to be extended by mutual agreement. The bill would require any payment due on an undisputed portion of the claim to be processed within 60 days, as specified. The bill would require that the claim be deemed rejected in its entirety if the public entity fails to issue the written statement.

This bill would authorize, if the claimant disputes the public entity's written response or if the public entity fails to respond to a claim within the time prescribed, the claimant to demand to meet and confer for settlement of the issues in dispute. The bill would require any disputed portion of the claim that remains in dispute after the meet and confer conference to be subject to nonbinding mediation, as specified. The bill would provide that unpaid claim amounts accrue interest at 7% per annum. The bill would prescribe a procedure by which a subcontractor or lower tier contractor may make a claim through the contractor.

This bill would require the text of these provisions, or a summary, to be set forth in the plans or specifications for any public work which may give rise to a claim. The bill would specify that a waiver of these rights is void and contrary to public policy, except as specified. The bill would also specify that it does not impose liability on a public entity that makes loans or grants available through a competitive application process, for the failure of an awardee to meet its contractual obligations.

By increasing the duties of local agencies and officials, this bill would impose a state-mandated local program.

This bill would, on January 1, 2020, repeal the provision establishing the claim resolution process.

This bill would specify that these provisions constitute a matter of statewide concern.

The California Constitution requires the state to reimburse local agencies and school districts for certain costs mandated by the state. Statutory provisions establish procedures for making that reimbursement.

This bill would provide that, if the Commission on State Mandates determines that the bill contains costs mandated by the state, reimbursement for those costs shall be made pursuant to these statutory provisions.

The people of the State of California do enact as follows:

SECTION 1. Section 9204 is added to the Public Contract Code, to read:

9204. (a) The Legislature finds and declares that it is in the best interests of the state and its citizens to ensure that all construction business performed on a public works project in the state that is complete and not in dispute is paid in full and in a timely manner.

(b) Notwithstanding any other law, including, but not limited to, Article 7.1 (commencing with Section 10240) of Chapter 1 of Part 2, Chapter 10 (commencing with Section 19100) of Part 2, and Article 1.5 (commencing with Section 20104) of Chapter 1 of Part 3, this section shall apply to any claim by a contractor in connection with a public works project.

(c) For purposes of this section:

(1) "Claim" means a separate demand by a contractor sent by registered mail or certified mail with return receipt requested, for one or more of the following:

(A) A time extension, including, without limitation, for relief from damages or penalties for delay assessed by a public entity under a contract for a public works project.

(B) Payment by the public entity of money or damages arising from work done by, or on behalf of, the contractor pursuant to the contract for a public works project and payment for which is not otherwise expressly provided or to which the claimant is not otherwise entitled.

(C) Payment of an amount that is disputed by the public entity.

(2) "Contractor" means any type of contractor within the meaning of Chapter 9 (commencing with Section 7000) of Division 3 of the Business and Professions Code who has entered into a direct contract with a public entity for a public works project.

(3) (A) "Public entity" means, without limitation, except as provided in subparagraph (B), a state agency, department, office, division, bureau, board, or commission, the California State University, the University of California, a city, including a charter city, county, including a charter county, city and county, including a charter city and county, district, special district, public authority, political subdivision, public corporation, or nonprofit transit corporation wholly owned by a public agency and formed to carry out the purposes of the public agency.

(B) "Public entity" shall not include the following:

(i) The Department of Water Resources as to any project under the jurisdiction of that department.

(ii) The Department of Transportation as to any project under the jurisdiction of that department.

(iii) The Department of Parks and Recreation as to any project under the jurisdiction of that department.

(iv) The Department of Corrections and Rehabilitation with respect to any project under its jurisdiction pursuant to Chapter 11 (commencing with Section 7000) of Title 7 of Part 3 of the Penal Code.

(v) The Military Department as to any project under the jurisdiction of that department.

(vi) The Department of General Services as to all other projects.

(vii) The High-Speed Rail Authority.

(4) "Public works project" means the erection, construction, alteration, repair, or improvement of any public structure, building, road, or other public improvement of any kind.

(5) "Subcontractor" means any type of contractor within the meaning of Chapter 9 (commencing with Section 7000) of Division 3 of the Business and Professions Code who either is in direct contract with a contractor or is a lower tier subcontractor.

(d) (1) (A) Upon receipt of a claim pursuant to this section, the public entity to which the claim applies shall conduct a reasonable review of the claim and, within a period not to exceed 45 days, shall provide the claimant a written statement identifying what portion of the claim is disputed and what portion is undisputed. Upon receipt of a claim, a public entity and a contractor may, by mutual agreement, extend the time period provided in this subdivision.

(B) The claimant shall furnish reasonable documentation to support the claim.

(C) If the public entity needs approval from its governing body to provide the claimant a written statement identifying the disputed portion and the undisputed portion of the claim, and the governing body does not meet within the 45 days or within the mutually agreed to extension of time following receipt of a claim sent by registered mail or certified mail, return receipt requested, the public entity shall have up to three days following the next duly publicly noticed meeting of the governing body after the 45-day period, or extension, expires to provide the claimant a written statement identifying the disputed portion and the undisputed portion.

(D) Any payment due on an undisputed portion of the claim shall be processed and made within 60 days after the public entity issues its written statement. If the public entity fails to issue a written statement, paragraph (3) shall apply.

(2) (A) If the claimant disputes the public entity's written response, or if the public entity fails to respond to a claim issued pursuant to this section within the time prescribed, the claimant may demand in writing an informal conference to meet and confer for settlement of the issues in dispute. Upon receipt of a demand in writing sent by registered mail or certified mail, return receipt requested, the public entity shall schedule a meet and confer conference within 30 days for settlement of the dispute.

(B) Within 10 business days following the conclusion of the meet and confer conference, if the claim or any portion of the claim remains in dispute, the public entity shall provide the claimant a written statement identifying the portion of the claim that remains in dispute and the portion that is undisputed. Any payment due on an undisputed portion of the claim shall be processed and made within 60 days after the public entity issues its written statement. Any disputed portion of the claim, as identified by the contractor in writing, shall be submitted to nonbinding mediation, with the public entity and the claimant sharing the associated costs equally. The public entity and claimant shall mutually agree to a mediator within 10 business days after the disputed portion of the claim has been identified in writing. If the parties cannot agree upon a mediator, each party shall select a mediator and those mediators shall select a qualified neutral third party to mediate with regard to the disputed portion of the claim. Each

party shall bear the fees and costs charged by its respective mediator in connection with the selection of the neutral mediator. If mediation is unsuccessful, the parts of the claim remaining in dispute shall be subject to applicable procedures outside this section.

(C) For purposes of this section, mediation includes any nonbinding process, including, but not limited to, neutral evaluation or a dispute review board, in which an independent third party or board assists the parties in dispute resolution through negotiation or by issuance of an evaluation. Any mediation utilized shall conform to the timeframes in this section.

(D) Unless otherwise agreed to by the public entity and the contractor in writing, the mediation conducted pursuant to this section shall excuse any further obligation under Section 20104.4 to mediate after litigation has been commenced.

(E) This section does not preclude a public entity from requiring arbitration of disputes under private arbitration or the Public Works Contract Arbitration Program, if mediation under this section does not resolve the parties' dispute.

(3) Failure by the public entity to respond to a claim from a contractor within the time periods described in this subdivision or to otherwise meet the time requirements of this section shall result in the claim being deemed rejected in its entirety. A claim that is denied by reason of the public entity's failure to have responded to a claim, or its failure to otherwise meet the time requirements of this section, shall not constitute an adverse finding with regard to the merits of the claim or the responsibility or qualifications of the claimant.

(4) Amounts not paid in a timely manner as required by this section shall bear interest at 7 percent per annum.

(5) If a subcontractor or a lower tier subcontractor lacks legal standing to assert a claim against a public entity because privity of contract does not exist, the contractor may present to the public entity a claim on behalf of a subcontractor or lower tier subcontractor. A subcontractor may request in writing, either on his or her own behalf or on behalf of a lower tier subcontractor, that the contractor present a claim for work which was performed by the subcontractor or by a lower tier subcontractor on behalf of the subcontractor. The subcontractor requesting that the claim be presented to the public entity shall furnish reasonable documentation to support the claim. Within 45 days of receipt of this written request, the contractor shall notify the subcontractor in writing as to whether the contractor presented the claim to the public entity and, if the original contractor did not present the claim, provide the subcontractor with a statement of the reasons for not having done so.

(e) The text of this section or a summary of it shall be set forth in the plans or specifications for any public works project that may give rise to a claim under this section.

(f) A waiver of the rights granted by this section is void and contrary to public policy, provided, however, that (1) upon receipt of a claim, the parties may mutually agree to waive, in writing, mediation and proceed directly to the commencement of a civil action or binding arbitration, as applicable; and (2) a public entity may prescribe reasonable change order, claim, and dispute resolution procedures and requirements in addition to the provisions of this section, so long as the contractual provisions do not conflict with or otherwise impair the timeframes and procedures set forth in this section.

(g) This section applies to contracts entered into on or after January 1, 2017.

(h) Nothing in this section shall impose liability upon a public entity that makes loans or grants available through a competitive application process, for the failure of an awardee to meet its contractual obligations.

(i) This section shall remain in effect only until January 1, 2020, and as of that date is

repealed, unless a later enacted statute, that is enacted before January 1, 2020, deletes or extends that date.

SECTION 2.
The Legislature finds and declares that it is of statewide concern to require a charter city, charter county, or charter city and county to follow a prescribed claims resolution process to ensure there are uniform and equitable procurement practices.

SECTION 3.
If the Commission on State Mandates determines that this act contains costs mandated by the state, reimbursement to local agencies and school districts for those costs shall be made pursuant to Part 7 (commencing with Section 17500) of Division 4 of Title 2 of the Government Code.

Geotechnical Report

GEOTECHNICAL REPORT

City of Roseville – Strauch Drive Tower

Roseville, California

July 2022

Prepared for:

CITY OF ROSEVILLE CALIFORNIA

311 Vernon Street
Roseville, CA 95678

Prepared by:

BLACKBURN CONSULTING

11521 Blocker Drive, Suite 110
Auburn, CA 95603
(530) 887-1494

Auburn Office:
11521 Blocker Drive, Ste 110
Auburn, CA 95603
(530) 887-1494

BLACKBURN CONSULTING

West Sacramento (916) 375-8706
Fresno (559) 438-8411

File No. 4211.X
July 8, 2022

Gina McColl
City of Roseville
Economic Development Department
311 Vernon Street
Roseville, CA 95678

Subject: **GEOTECHNICAL REPORT**
City of Roseville – Strauch Drive Tower
Roseville, California

Dear Gina,

Blackburn Consulting (Blackburn) is pleased to submit this Geotechnical Report for the City of Roseville's Strauch Drive Tower Project in Roseville, California. Blackburn prepared this report in accordance with our agreement dated May 31, 2022.

Thank you for selecting Blackburn on your design team. Please call us if you have questions or require additional information.

Sincerely,

BLACKBURN CONSULTING

Luke Morrell, E.I.T.
Project Engineer

Haze Rodgers, P.E., G.E.
Geotechnical Director

Reviewed by:

David Morrell, P.E., G.E.
Senior Project Manager

Table of Contents

1 INTRODUCTION 1
1.1 Purpose 1
1.2 Scope of Services 1
2 SITE AND PROJECT DESCRIPTION 1
3 GEOLOGIC CONDITIONS 3
4 FIELDWORK AND LABORATORY TESTING 3
4.1 Exploratory Borings 3
4.2 Laboratory Testing 3
5 SUBSURFACE FINDINGS 4
5.1 Soil and Rock Conditions 4
5.2 Groundwater 4
6 CONCLUSIONS AND RECOMMENDATIONS 5
6.1 Site Suitability 5
6.2 Seismic Design 5
6.3 Grading 5
6.3.1 Excavations 6
6.3.2 Original Ground and Subgrade Preparation 6
6.3.3 Fill and Compaction 7
6.3.4 Over-Optimum Soil Moisture 7
6.4 Utility Trenches 7
6.4.1 Temporary Excavations and Trench Stability 7
6.4.2 Backfill and Compaction 8
6.5 Mat Foundation Recommendations 8
6.5.1 Mat Foundations 8
6.5.2 Mat Underlayment 9
6.5.3 Design Considerations for Moisture 9
6.6 Shallow Foundation Recommendations 9
6.7 Drilled Pier Foundation Recommendations 10
6.7.1 Drilled Pier Foundation Recommendations – Self-Supporting Tower 10
6.8 Flatwork – Pedestrian Traffic Only 11
6.9 Soil Corrosion Potential 11
6.10 Pavement Design 12
6.10.1 Subgrade and Aggregate Base Preparation 12

6.10.2 Hot Mix Asphalt (HMA) Pavement.....12

7 RISK MANAGEMENT 13

8 LIMITATIONS 13

FIGURES
Figure 1 – Vicinity Map
Figure 2 – Site Plan

APPENDIX A
Boring Logs and Boring Log Legend

APPENDIX B
Laboratory Test Results

APPENDIX C
Important Information about This Geotechnical Engineering Report

1 INTRODUCTION

1.1 Purpose

Blackburn Consulting (Blackburn) prepared this Geotechnical Report (Report) for the City of Roseville's (City) Strauch Drive Tower Project (Project) in Roseville, California. This report describes the surface and subsurface conditions, site geology, and geotechnical design/construction recommendations. Do not use or rely upon this report for different locations or improvements without the written consent of Blackburn.

1.2 Scope of Services

To prepare this report, Blackburn:

- Discussed the Project with Gina McColl (City of Roseville).
- Reviewed *Topographic Survey Existing Conditions Plans* (Sheets C-1 and C-2), Hayes Land Surveying and Mapping, dated 19 January 2022.
- Reviewed *Proposed Equipment Installation Strauch Drive* (Sheet A-1), L.D. Strobel Co. Inc., dated 22 February 2022.
- Reviewed *Pleasant Grove As-Built Plans* (Sheet T-1, G-1, C-1 through C-8, and SP-1 through SP-5), Patriot Towers, dated 22 October 2010.
- Reviewed Word Document Titled: *Required Soils Information For Self-Supported Tower Foundations,* undated.
- Reviewed published geologic mapping and geotechnical data.
- Marked boring location and notified Underground Service Alert (USA North)
- Observed, logged, and sampled one boring to 25 feet in depth below ground surface.
- Performed laboratory tests on samples obtained from the exploratory boring.
- Completed engineering analysis and calculations to develop our conclusions and recommendations.

2 SITE AND PROJECT DESCRIPTION

The City plans to construct a new communications tower and associated support equipment at 2001 Strauch Drive in Roseville, California. The new communications tower will be a maximum of 190-foot tall "Self-Supporting Tower". A new access road will be constructed from the existing parking lot southeast of the site to the tower. The anticipated equipment includes:

- 1000-gallon propane tank,
- 70kW propane generator, and
- Approximately 12-foot by 17-foot shelter structure.

The site is an undeveloped parcel owned by the City generally covered with grasses and small to large oak trees. The site is located at 2001 Strauch Drive in Roseville, California at approximate GPS coordinates of 38.74318921° N, Longitude: -121.25431382° W. The site is bound by Strauch Drive to the west and south, and commercial properties to the north and east. Figure 1 shows the project vicinity.

Photos 1 and 2 show the site conditions.

Photo 1

Photo 1: Southern portion of the site looking north towards the proposed tower location.

Photo 2

Photo 2: Northern portion of the site looking south towards the proposed tower location.

The proposed improvements are shown on Figure 2.

3 GEOLOGIC CONDITIONS

The site is located within the north central portion of the Great Valley Geomorphic Province. The Great Valley is a broad, elongated, northwest trending, structural trough that has been filled with a thick sequence of marine and alluvial sediments.

Published Geologic Mapping[1] shows the site is underlain by the Tertiary Mehrten Formation consisting of mainly andesitic conglomerate, sandstone, and volcanic mudflow breccia. The volcanic mudflow breccia typically consists of a gray mixture of gravel to boulder size, angular, andesitic fragments in a well cemented matric of volcanic lapilli and ash. The andesitic boulders can be sizeable (1 to 3-foot diameter and occasionally larger) and are much harder than the well cemented matrix. The cobble conglomerate consists primarily of cobbles in a well-cemented matrix of andesitic sand and silt but can contain large boulders. The cobble conglomerate often contains interbedded layers of sandstone, siltstone, and lenses of mudflow breccia. Bedding within the Mehrten Formation dips gently (approximately 2 to 3 degrees to the west/southwest).

We encountered the volcanic mudflow breccia in our borings beneath the overlying soil to the depth explored.

4 FIELDWORK AND LABORATORY TESTING

4.1 Exploratory Borings

To characterize the subsurface conditions, Blackburn logged and sampled one boring to a depth of 25 feet below the ground surface (bgs). Our subcontractor (Taber Drilling) drilled the boring using a solid-stem (4-inch diameter) auger and switched to HQ rock coring upon refusal to auger advancement. We obtained soil and decomposed/very intensely weathered rock samples at various intervals for 18-inch drives using 3.0-inch O.D. Modified California (MC) and 2.0-inch O.D. Standard Penetration Test (SPT) samplers driven with an automatic hammer, weighing 140-pounds, and falling approximately 30 inches per blow. We recorded the blow counts to drive the sampler each 6 inches on the boring log. The driller terminated the sample drive when a total of 50 blows had been applied during any of the 6-inch increments (50/3”as an example). Upon completion, the boring was backfilled with grout in accordance with the City of Roseville soil boring permit.

Blackburn’s project geologist, Nick Vasquez, logged the boring and retrieved samples for laboratory testing. The samples were labeled and delivered to our West Sacramento laboratory for geotechnical testing.

We present our boring log in Appendix A and the boring location and proposed improvements in Figure 2.

4.2 Laboratory Testing

We completed the following laboratory tests on representative samples from our exploratory boring:

- Moisture content and Dry Density (ASTM D2216 and D2937) for soil consistency.

[1] Gutierrez, Carlos I., 2011, *Preliminary Geologic Map of the Sacramento 30’ x 60’ Quadrangle, California,* (Scale 1:100,000), California Geological Survey.

- Atterberg Limits (ASTM D4318) and 200 Wash (ASTM D1140 for soil classification.
- Rock Core Unconfined Compression (ASTM D2166) to measure rock strength.
- Direct Shear (ASTM D3080) to measure soil strength.
- Chlorides, Sulfates, pH, and Minimum Resistivity (CTM 417, 422, and 643) for corrosion characteristics.
- R-Value (California Test Method – CTM 301) for pavement design.

Laboratory test results are included in Appendix B and on the boring log in Appendix A.

5 SUBSURFACE FINDINGS

5.1 Soil and Rock Conditions

Table 1 summarizes the subsurface conditions encountered in our boring:

Table 1:
Subsurface Conditions

Boring Number	Approximate Depth (ft.)	Description
B-1	0 – 5.5	Very dense silty sand with gravel
	5.5 – 9.0	Very dense silty sand
	9.0 – 14.5	Mehrten Formation volcanic breccia, decomposed to intensely weathered igneous rock
	14.5 – 25.0	Mehrten Formation volcanic breccia, moderately to slightly weathered, very intensely to moderately fractured, hard to very hard igneous rock

Refer to the boring log in Appendix A for more detailed descriptions.

5.2 Groundwater

We did not encounter groundwater during our subsurface exploration. Groundwater and perched water levels can fluctuate due to changes in precipitation, nearby surface water levels, irrigation, pumping of wells, and other factors. Generally, groundwater levels will be at their highest during winter/spring and lower from summer through late fall.

Blackburn reviewed groundwater level data available at the California Department of Water Resources website (SGMA Data Viewer (ca.gov)), which indicates that recent historic groundwater levels range from approximately 70 to 100 feet below ground surface.

6 CONCLUSIONS AND RECOMMENDATIONS

6.1 Site Suitability

The site should be suitable for the planned improvements when constructed in accordance with the project plans, industry standards, and our geotechnical recommendations.

6.2 Seismic Design

Blackburn used the SEAOC/OSHPD Seismic Design Maps Tool to determine our recommended 2019 California Building Code (CBC) seismic design parameters, we considered:

- ASCE 7-16 Reference Standard
- Risk Category II
- Site Class C – Very Dense Soil and Soft Rock
- Latitude: 38.74318921°, Longitude: -121.25431382°

These inputs were selected based on our understanding on the function of the project improvements and subsurface conditions encountered. Table 2 presents our recommended 2019 CBC seismic design parameters.

Table 2: Seismic Design Parameters (CBC 2019) Site Class C	
S_s – Acceleration Parameter	0.432 g
S_1 – Acceleration Parameter	0.218 g
F_a – Site Coefficient	1.3
F_v – Site Coefficient	1.5
S_{MS} – Adjusted MCE Spectral Response Acceleration Parameter	0.561 g
S_{M1} – Adjusted MCE Spectral Response Acceleration Parameter	0.327 g
S_{DS} – Design Spectral Response Acceleration Parameter	0.374 g
S_{D1} – Design Spectral Response Acceleration Parameter	0.218 g
T_L - Long-Period Transition Period	12 sec
PGA - Peak Ground Acceleration	0.183 g
PGA_M - Site Modified Peak Ground Acceleration	0.223 g

6.3 Grading

Where referenced in this report, use ASTM D1557 test methods to determine relative compaction and optimum moisture. Compacted soil should not be considered suitable (even if it meets relative compaction requirements) if it is unstable and pumps or flexes excessively under construction equipment loads.

6.3.1 Excavations

Our exploratory boring at the site suggests that the upper soil should be excavatable with conventional earthmoving equipment. Excavations in the Mehrten Formation and likely encounter little to no progress with conventional earthmoving equipment. The actual excavation effort will depend on the equipment type and methods used, and the amount of wear and tear and progress acceptable to the contractor. The contractor is responsible for selecting equipment.

All excavations must be sloped, shored, and/or shielded in accordance with current Cal/OSHA requirements. The contractor is responsible for site safety, excavation, and final shoring design (including OSHA soil type determination) and construction, based on actual excavation conditions (including trench spoils, equipment, stockpiles, etc.) encountered during construction. The contractor is also responsible for the protection of existing facilities and improvements. At the time of construction, the contractor must evaluate and adjust accordingly excavation sloping/shoring methods based on:

- The impact of construction traffic vibrations.
- Actual soil/rock conditions exposed in the open excavations.
- Seepage and/or groundwater conditions.
- Surcharges adjacent to excavations.
- Proximity of excavations to existing structures or trees.
- Other factors that may promote excavation wall instability or cause excavation related damage to existing facilities and improvements.

6.3.2 Original Ground and Subgrade Preparation

Prior to site grading:

- Strip vegetation to a minimum depth of 2 inches below the ground surface and remove brush and trees including the root balls and roots larger than 1-inch diameter.
- Remove existing utilities, underground structures, and trench backfill in the structure footprints and 5 feet beyond.
- Do not use strippings within fills, except in the upper 2 feet of landscape areas (non-structural locations) if approved by the landscape architect.

Following the above preparation:

- Scarify the subgrade to a depth of 8 inches.
- Uniformly moisture condition the scarified native subgrade to 2% to 4% above the optimum moisture content.
- Compact the exposed subgrade to a minimum 90% relative compaction.
- Compact the upper 6 inches of pavement subgrade to a minimum 95% relative compaction.
- Place and compact fill as outlined in Section 6.3.3.

6.3.3 Fill and Compaction

The on-site soil may be used as fill provided it is free of debris, visible concentrations of vegetation, and has a maximum particle size of 3-inches. If import fill is required, it should meet the following specifications:

- No concentrations of organics, debris, and other deleterious materials,
- Maximum particle size of 1-inch, with at least 75% passing the No. 4 Sieve, and no more than 30% passing the No. 200 Sieve.
- Plasticity Index less than or equal to 12, per ASTM D4318.
- Expansion Index of less than or equal to 20, per ASTM D4829
- Must be approved by Blackburn prior to its transport to the site.

Place fill as follows:

- Place fill in loose lifts no thicker than 8 inches prior to compaction.
- Uniformly moisture condition each lift of native fill to 2% to 4% above the optimum moisture content and import fill (including aggregate base) 0% to 2% above the optimum moisture content. In concrete flatwork areas, maintain the native fill moisture content until the fill is covered by additional fill or the aggregate base section.
- Compact import fill to at least 90% relative compaction in flatwork areas and 95% beneath structures.

6.3.4 Over-Optimum Soil Moisture

Excessively over-optimum (wet) soil conditions can make proper compaction difficult or impossible. Wet soil is commonly encountered during the winter and spring months, or in excavations where groundwater or perched groundwater is encountered.

In general, wet soil can be mitigated by:

- Discing the soil during prolonged periods of dry weather,
- Over-excavating and replacement with drier material,
- Stabilization using aggregate and stabilization fabric or grid.

If wet, unstable soil is encountered, Blackburn can observe the conditions and provide more specific mitigation recommendations.

6.4 Utility Trenches

6.4.1 Temporary Excavations and Trench Stability

Trench excavations should remain stable in the upper 4 feet. We anticipate temporary excavation sloping and shoring requirements for Type C soil (Federal Register, 29 CFR, Part 1926, Subpart P; Occupational Safety and Health Standards – Excavations) for shallow excavations (up to 10 feet depth from existing site grades).

All excavations must be sloped, shored, and/or shielded in accordance with current Cal/OSHA requirements. The impact of construction traffic vibrations, actual soil conditions exposed in the open

excavations, surcharges adjacent to excavations, proximity of excavations to existing structures, and other factors that may promote excavation wall instability must be evaluated at the time of construction and excavation sloping/shoring adjusted accordingly. The contractor is responsible for site safety and final excavation and shoring design and construction based on construction schedule and sequencing and actual environmental and excavation conditions.

6.4.2 Backfill and Compaction

On-site and imported soil is suitable for trench backfill provided it meets fill requirements in Section 6.3.3.

Place and compact trench backfill as follows:

1. Place trench backfill in maximum 12-inch-thick loose lifts.
2. Uniformly moisture condition trench backfill to within 2% of optimum.
3. Uniformly compact trench backfill to at least 95% relative compaction.

Jetting is not acceptable for compaction.

Soil excavated during trenching may have a moisture content well below optimum, especially during summer months or after prolonged periods of dry weather. Allow adequate time for moisture conditioning soils prior to backfilling and compaction. During the winter and spring months or if perched water is encountered, excavated soil may have a moisture content well above optimum. In this case, it will be necessary to dry back the soil prior to use as backfill.

6.5 Mat Foundation Recommendations

6.5.1 Mat Foundations

Blackburn provides the following geotechnical design recommendations for support of the equipment pads. We assume the 70kW propane generate and 1000-gallon propane tank will be supported on a reinforced concrete mat slab foundation:

- Compact the exposed mat foundation subgrade and any fill placed below the mat foundation in accordance with Sections 6.4.2 and 6.4.3.
- Use a maximum contact pressure for mat foundation of 5,000 psf.
- Use an average Modulus of Subgrade Reaction, ks, equal to 70 pci. The Modulus of Subgrade reaction is dependent upon multiple factors that are not known at this time. These factors include the dimensions and stiffness of the mat, and the magnitude and variation of bearing pressure. For settlement sensitive structures Blackburn should check the recommended Modulus of Subgrade Reaction once preliminary foundation pressures are available and provide updated values for final design. In some cases, multiple iterations are required between Blackburn and the structural engineer.
- We expect settlement of mat foundations is expected to be less than ½ -inch.
- Clean footing excavations of debris and loose soil prior to placing concrete.
- Blackburn must observe all footing excavations prior to reinforcement placement to verify competent bearing materials.
- Slope the ground surface away from the mat foundations at a minimum of 5 percent for a distance of at least 5 feet.

For subgrade uniformity, Caltrans Class 2 Aggregate Base (AB) can be used as underlayment (this is not geotechnically necessary provided a firm uniform subgrade is obtained). If an aggregate underlayment is used, place a minimum thickness of 6-inches, and compact to a minimum of 95% relative compaction.

6.5.2 Mat Underlayment

Underlay concrete floor slabs with a minimum of 4 inches of washed, crushed, and compacted rock to provide uniform support. Crushed rock used beneath floor slabs should be graded so that 100% passes the ¾ inch sieve and less than 5% passes the No. 4 sieve. Compact crushed rock with at least two passes of a vibratory type compactor. Substitute compacted AB if moisture transmission through the floor slab is acceptable. The AB should be compacted to at least 95 percent relative compaction.

6.5.3 Design Considerations for Moisture

We did not observe shallow groundwater or shallow seepage in the exploratory boring. However, irrigation and storm water can accumulate near the ground surface and around structures. While we do not expect water accumulations to be significant enough to require underfloor drainage systems, it could be enough to cause higher than normal moisture vapor to pass through the concrete mat. Excessive vapor can cause floor covering damage and mold.

The designer must consider the potential for excessive water vapor, its potential impact on proposed improvements, and design the slabs and underlayment accordingly. References providing guidelines for vapor mitigation and slab underlayment include ASTM E 1643, ACI 302.1R-04, PCA, and flooring manufacturer requirements for the intended use.

No matter how extensive the vapor mitigation design, some vapor will pass through the slabs and, the slabs themselves will absorb and release some moisture. Therefore, consult with floor covering and mold specialists, and include a contingency to replace some floor coverings and mitigate potential mold growth.

6.6 Shallow Foundation Recommendations

We recommend the design of shallow foundations consider:

- Minimum footing embedment isolated and combined of 24 inches below the lowest adjacent soil grade.
- Strip footings must be a minimum of 12 inches wide.
- Isolated footings must be a minimum of 18 inches wide.
- Size strip and isolated footings not to exceed an allowable bearing capacity of 3,000 psf (dead plus live load).
- The allowable bearing capacity may be increased by one-third for transient loads where used with the alternative basic load combinations in Section 1605.3.2 (2019 *California Building Code*, (CBC)) that include seismic and/or wind loads.
- We estimate total settlement of about ½ inch considering the allowable bearing capacity above.

This is immediate settlement that should occur with initial loading.

- To resist lateral movement, use an ultimate coefficient of friction of 0.36 at the base of the foundation and an ultimate passive earth pressure of 420 psf per foot of embedment depth. Both friction and passive earth pressure can be combined for lateral resistance; when combined, increase the safety factor against sliding from a minimum of 1.5 to 2.0. Ignore the passive resistance of the upper foot of soil.
- Slope the ground surface away from foundations at a minimum of 5 percent for a distance of at least 5 feet.
- Clean footing excavations of debris and loose soil prior to placing concrete.
- Blackburn **must** observe all footing excavations prior to reinforcement placement to verify competent bearing materials are exposed.

6.7 Drilled Pier Foundation Recommendations

6.7.1 Drilled Pier Foundation Recommendations – Self-Supporting Tower

Design reinforced cast-in-place concrete piers in accordance with the following recommendations:

- Provide a minimum pier:
  - diameter of 18 inches,
  - Minimum depth of 10 feet,
  - spacing of 6 diameters, center-to-center (6D Spacing).
- Table 3 provides allowable skin friction values to resist uplift and compression loads:

Table 3: Allowable Skin Friction

Depth Below Finish Grade (ft)	Allowable Skin Friction (psf)		
	Compression Resistance	Uplift Resistance	Factor of Safety
0 to 6	85	65	2.0
6 to Top of Mehrten	330	250	2.0
Within Mehrten	2,000	1,500	2.0

- In combination with skin friction resistance, an allowable soil bearing pressure of 10,000 pounds per square foot may also be used for end bearing resistance to resist compression loads for the piers embedded at least 6. Pier bottoms must be cleaned to remove any loose soil or debris prior to concrete placement if end bearing resistance is used for design.
- Table 4 provides allowable passive pressure values to resist pier lateral loads:

Table 4: Allowable Passive Pressure		
Depth Below Finish Grade (ft)	**Allowable Passive Pressure (psf/ft)**	**Factor of Safety**
0 to 6	210	2.0
6 to Top of Mehrten	230	2.0
Within Mehrten	300	2.0

- The above allowable skin friction, bearing pressure and passive pressure values may be increased by one-third for transient loads such as wind or seismic.
- Group reduction factors for axial and lateral resistance are not necessary provided the minimum 6D pier spacing is maintained. Reduction factors for piers located closer than 6D can be provided on a case-by-case basis.
- *For drilled pier foundations not located within concrete flatwork or pavement areas, neglect skin friction and passive pressure resistance within the upper 1 foot of finish grade.*
- For reinforced piers designed in accordance with the above recommendations, we estimate total settlement about ½ inch.
- Pier excavations through the soil layer will likely be able to be drilled with conventional auger drilling techniques based on the soil conditions encountered in our explorations. Drilling in the underlying Mehrten formation may be difficult with conventional augers and may require specialized hard rock drilling equipment. The contractor is responsible for selecting the appropriate drilling equipment and techniques to drill the piers.
- Pier excavations should be dewatered prior to placing concrete.

6.8 Flatwork – Pedestrian Traffic Only

Use the following minimum sections for unreinforced concrete sidewalks and flatwork subjected to pedestrian traffic only. Exterior flatwork should have a minimum section consisting of 6 inches of concrete reinforced with No. 3 rebar spaced at 18 inches on center each way. Wire mesh reinforcement and dowels between panels is a suitable alternative design. The flatwork should be underlain by at least 6 inches of aggregate base or non-expansive imported fill. Process and compact flatwork subgrade and aggregate base/non-expansive fill in accordance with Section 6.4.3. Flatwork must be properly jointed to allow for slab shrinkage and movement. ACI provides recommendations on slab jointing based on slab thickness, location, and use.

6.9 Soil Corrosion Potential

Table 5 presents the soil corrosivity test results.

Table 5: Soil Corrosion Test Results					
Sample No.	**Depth (ft.)**	**pH**	**Minimum Resistivity (ohm-cm)**	**Sulfate Content (ppm)**	**Chloride Content (ppm)**
B1-1B	3-3.5	5.61	2,470	88.5	3.7

Based on the test results, structural concrete in contact with the ground should meet the concrete and reinforcing steel requirements of American Concrete Institute's *Building Code Requirements for Structural Concrete (ACI-318-19*) for Exposure Class S0 (Sulfates) and Exposure Class C1 (Chlorides). The corrosion test results indicate that the near surface soil is corrosive to steel and other metals. We are not corrosion consultants, and we did not evaluate the potential corrosion impacts to metallic elements embedded in or in contact with the ground. **Retain a corrosion consultant to provide specific corrosion protection recommendations if buried metallic elements are used at the site.**

6.10 Pavement Design

6.10.1 Subgrade and Aggregate Base Preparation

Process and compact pavement subgrade in accordance with Section 6.3.2. Aggregate base (AB) should conform to Caltrans Class 2 requirements. Moisture condition and compact AB to a minimum 95% relative compaction. Prior to placing asphalt, the aggregate base should be stable under the weight of a loaded water truck. Contact Blackburn to observe unstable areas and provide mitigation recommendations, if necessary.

6.10.2 Hot Mix Asphalt (HMA) Pavement

R-value laboratory tests on samples of near surface soil encountered resulted in an R-value of 25. We used the Caltrans Flexible Pavement Design Empirical Method (Highway Design Manual, Chapter 630) to calculate the new pavement section recommendations. Table 6 shows the recommended structural sections based on an R-values of 25. The designer must select the applicable Traffic Index (TI) to represent anticipated loading.

Table 6: Recommended HMA Pavement Sections (R-Value = 25)		
Traffic Index (TI)	**HMA Thickness (Type A) (in)**	**Class 2 Aggregate Base Thickness (in)**
5.0	3.0	6.5
6.0	4.5	6.5
7.0	5.0	9.0
8.0	6.0	10.0
9.0	7.0	12.0
10.0	8.0	13.5

Design the pavement areas to allow for positive surface drainage. Adequate surface slope, subgrade crown, and uniform compaction contribute to long-term pavement performance. If water is trapped

under pavement the water can saturate the base course and soil subgrade, which results in premature pavement failure. Construct cut-off curbs where landscaping abuts the pavement to help limit water migration into the base course. Provide a minimum cut-off curb width of 4 inches. Extend curbs a minimum of 4 inches into the soil underlying the base course.

7 RISK MANAGEMENT

Our experience and that of our profession clearly indicates that the risks of costly design, construction, and maintenance problems can be significantly lowered by retaining the geotechnical engineer of record to provide required services during design and construction. For this project, retain Blackburn to:

- Review and provide comments on the civil plans, foundation plans, and specifications prior to construction.
- Monitor construction to check and document our report assumptions. At a minimum, Blackburn should test/monitor over-excavation, grading, foundation excavation, backfill, general compaction, and utility trench backfill.
- Update this report if layout or design changes occur, 2 years or more lapses between this report and construction, and/or site conditions have changed.

If we are not retained to perform the above applicable services, we are not responsible for any other party's interpretation of our report, and subsequent addendums, letters, and discussions.

8 LIMITATIONS

Blackburn performed services in accordance with generally accepted geotechnical engineering principles and practices currently used in this area. We do not warranty our services.

Blackburn based this report on the current site conditions. We assume the soil and groundwater conditions observed are representative of the subsurface conditions on the site. Actual subsurface conditions could be different.

Our scope did not include evaluation of the potential for hazardous materials impacts or corrosion mitigation.

Modern design and construction are complex, with many regulatory sources/restrictions, involved parties, construction alternatives, etc. It is common to experience changes and delays. The owner should set aside a reasonable contingency fund based on complexities and cost estimates to cover changes and delays.

Appendix A contains our boring log. The lines designating the interface between soil and rock types are approximate. The transition between soil types may be abrupt or gradual. Our recommendations are based on the final logs, which represent our interpretation of the field log and general knowledge of the site and geological conditions. The boring location and elevation are approximate (locations were not surveyed).

GEOTECHNICAL REPORT

City of Roseville – Strauch drive Tower

Roseville, California

July 2022

FIGURES

Figure 1 – Vicinity Map
Figure 2 – Site Plan

BLACKBURN
CONSULTING

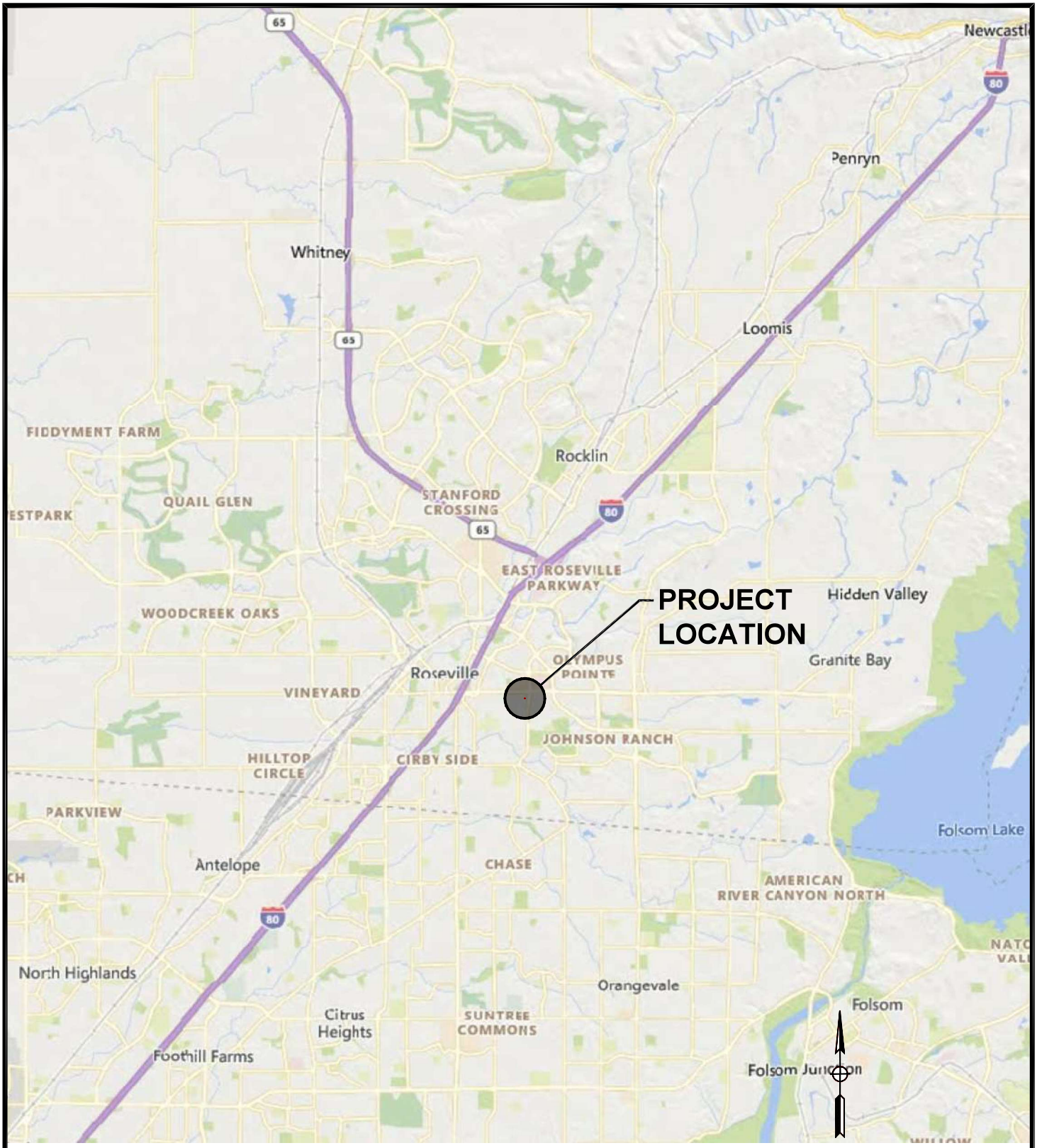

SCALE: 1"= 10,000'

DISTANCE, FEET

0 5000 10000 15000 20000

BLACKBURN CONSULTING

VICINITY MAP

City of Roseville
Strauch Drive Tower
Roseville, California

File No. 4211.x

July 2022

Figure 1

6/6/2022 4211.x Fig1 COR Strauch Dr Tower.dwg

Source: City of Roseville, Proposed Equipment Installation, Sheet A-1, by L.D. Strobel Co. Inc., dated 2-22-2022.

BLACKBURN CONSULTING

SITE PLAN

City of Roseville
Strauch Drive Tower
Roseville, California

File No. 4211.x
July 2022
Figure 2

6/6/2022 4211.x Fig2 COR Strauch Dr Tower.dwg

GEOTECHNICAL REPORT

City of Roseville – Strauch drive Tower

Roseville, California

July 2022

APPENDIX A

Boring Logs and Boring Log Legend

BLACKBURN
CONSULTING

LOGGED BY	BEGIN DATE	COMPLETION DATE	LOCATION (Lat/Long or North/East and Datum)	HOLE ID
NRV	6-2-22	6-2-22	38.743222° / -121.254339°	B-1
CONTRACTOR			LOCATION (Offset, Station, Line)	SURFACE ELEVATION
Taber				182.5 ft
OPERATOR'S NAME	HELPER'S NAME		EQUIPMENT	TOTAL DEPTH
Chad	Cody / Desmond		CME 55 Crawler	25.0 ft
EXCAVATION METHOD			DRILLING ROD TYPE AND DIAMETER / BUCKET WIDTH	BOREHOLE DIAMETER
Solid-Stem Auger / HQ Core				4 in
SAMPLER TYPE(S) AND SIZE(S) (ID)			HAMMER TYPE	HAMMER EFFICIENCY, ERi
SPT (1.4"), Cal-Mod (2.4"), HQ Core, Bulks			Safety semi-automatic drop (140#/ 30")	
BACKFILL AND COMPLETION			GROUND WATER READINGS DURING / AFTER (DATE)	CASING TYPE AND DIAMETER(in)
Backfilled with Grout			Not Encountered	

ELEVATION (ft)	DEPTH (ft)	Material Graphics	DESCRIPTION	Sample Location	Sample Number	Blows per 6 in.	Blows per foot	N60 (ASTM)	Recovery (%)	Pocket Pentrometer	Laboratory Data: Moisture Content (%)	Dry Density (pcf)	Liquid Limit	Plasticity Index	% <#200	Unconfined Compression Test (psi)	Additional Lab Tests	Drilling Method
	0		SILTY SAND with GRAVEL (SC); very dense; mottled light brown and orangish brown; dry to moist; very fine to medium SAND; few coarse SAND; some fines; little coarse GRAVEL														R	
180	1																	
	2																	
	3				1	18 31 32	63		65	>4.5	21	91	37	11	50		CR	
	4																	
	5																	
	6		SILTY SAND (SM); very dense; light brown to brown; dry; fine to coarse SAND; little fines		2	12 25 50/5.5	75/ 11.5"		65	>4.5					19 15		DS	
175	7																	
	8																	
	9		IGNEOUS ROCK (MEHRTEN FORMATION; VOLCANIC BRECCIA); massive; light pinkish gray; decomposed to intensely weathered (SANDY SILT (ML); hard; dry; some fine to medium SAND; nonplastic)															
	10				3	50/5"	50/ 5"		80	>4.5								
	11		Difficulty advancing auger from 10.5-14.5 ft bgs															
170	12																	
	13																	
	14				4	50/4"	50/ 4"		100									
	15		switched to rock coring IGNEOUS ROCK (MEHRTEN FORMATION; VOLCANIC BRECCIA); massive; light gray to grayish brown; moderately to slightly weathered; hard to very hard; intensely to moderately fractured		Run 1				78							1796		
	16																	
165	17																	
	18				Run 2				78							1804		
	19																	
	20		very intensely fractured															
	21																	
160	22																	
	23				Run 3				29									
	24		very intensely to intensely fractured															
	25		Bottom of exploration at 25.0 ft below ground surface (bgs)															
	26		Backfilled with Grout No Free Groundwater															
	27																	
155	28		Bulk A 0.0'-5.0'															
	29																	
	30																	

BCI LOG FOR SOIL TEMPLATE.GPJ LIBRARY_2019.GLB 7/1/22

BLACKBURN CONSULTING

PROJECT NAME	FILE NO.	HOLE ID
City of Roseville - Strauch Drive Tower	4211.X	B-1
COUNTY: PLA	ROUTE	POSTMILE
CLIENT: City of Roseville		
PREPARED BY: NRV	CHECKED BY: HMR	SHEET: 1 of 1

GEOTECHNICAL REPORT

City of Roseville – Strauch drive Tower

Roseville, California

July 2022

APPENDIX B

Laboratory Test Results

BLACKBURN
CONSULTING

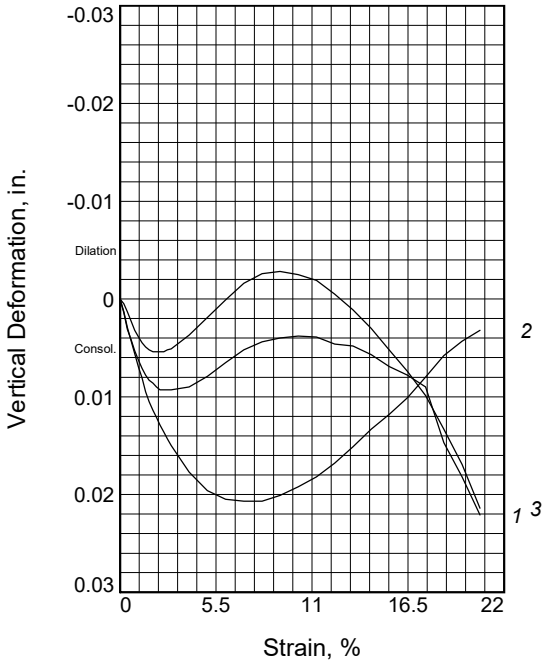

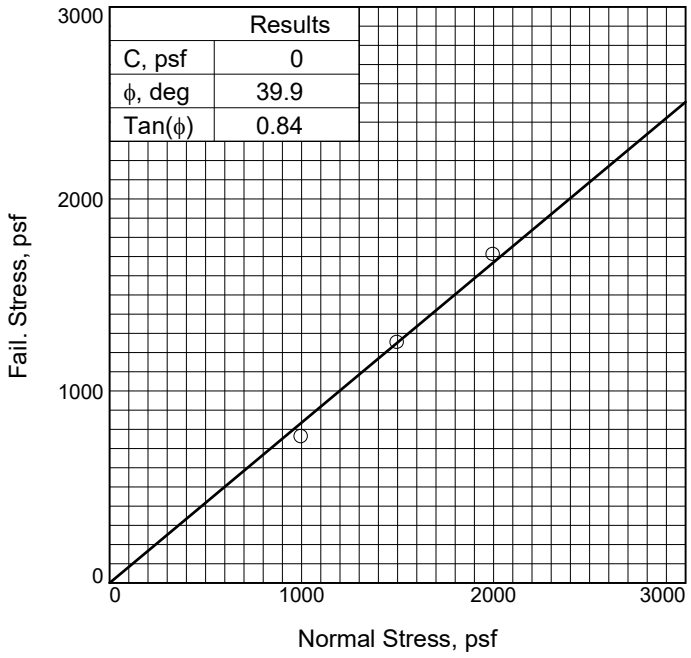

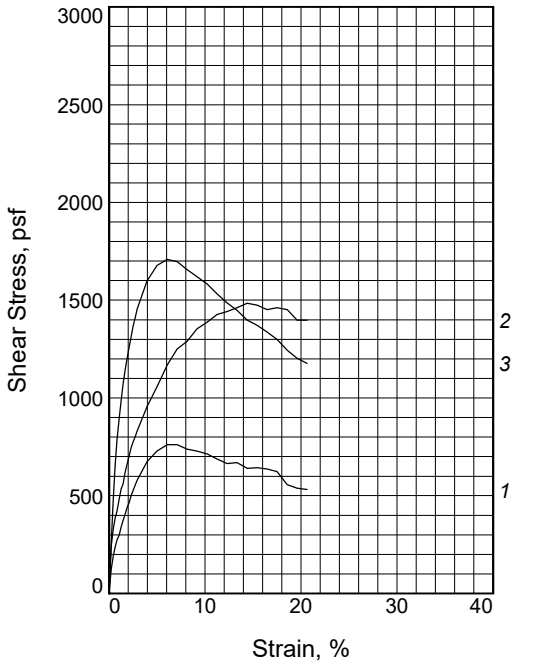

Sample No.		1	2	3
Initial	Water Content, %	14.9	8.7	14.7
	Dry Density, pcf	89.2	86.9	89.3
	Saturation, %	45.3	25.0	44.5
	Void Ratio	0.8905	0.9397	0.8886
	Diameter, in.	2.400	2.400	2.400
	Height, in.	1.000	1.000	1.000
At Test	Water Content, %	31.0	30.2	28.9
	Dry Density, pcf	91.7	92.8	94.6
	Saturation, %	100.0	100.0	100.0
	Void Ratio	0.8378	0.8156	0.7809
	Diameter, in.	2.400	2.400	2.400
	Height, in.	0.972	0.936	0.943
Normal Stress, psf		1000.0	1500.0	2000.0
Fail. Stress, psf		760.8	1251.0	1709.3
Strain, %		6.0	7.1	6.0
Ult. Stress, psf				
Strain, %				
Strain rate, in./min.		0.003	0.003	0.003

Sample Type: CalMod
Description: SILTY SAND

Assumed Specific Gravity= 2.7
Remarks:

Figure _____

Client: City of Roseville

Project: City of Roseville - Stauch Drive Tower

Source of Sample: B-1 **Depth:** 6-6.5'
Sample Number: 2C

Proj. No.: 4211.x **Date Sampled:**

DIRECT SHEAR TEST REPORT
Blackburn Consulting
W. Sacramento, CA

R-VALUE TEST REPORT

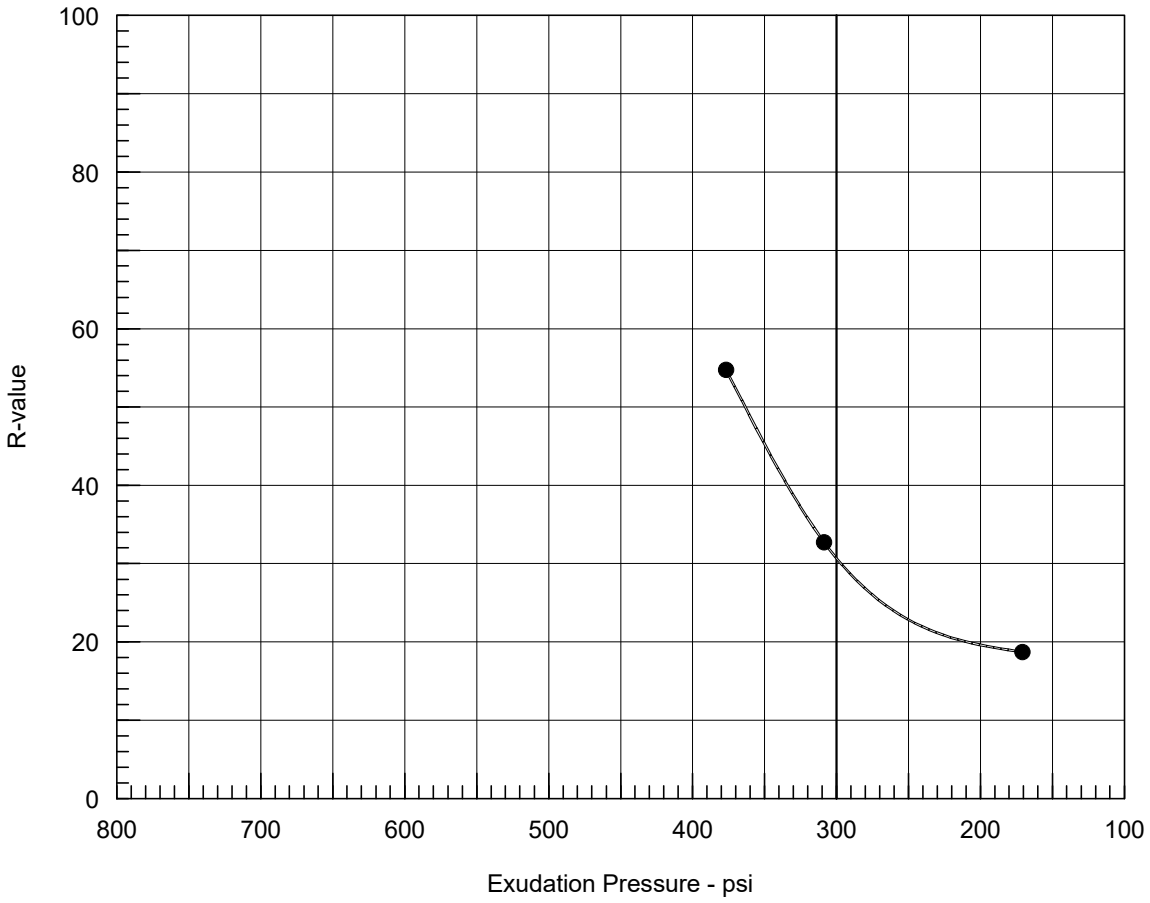

Resistance R-Value and Expansion Pressure - Cal Test 301

No.	Compact. Pressure psi	Density pcf	Moist. %	Expansion Pressure psf	Horizontal Press. psi @ 160 psi	Sample Height in.	Exud. Pressure psi	R Value	R Value Corr.
1	188	116.4	14.5	0	56	2.40	377	57	55
2	83	114.1	15.6	0	94	2.47	309	33	33
3	63	111.4	16.7	0	116	2.49	171	19	19

Test Results	Material Description
R-value at 300 psi exudation pressure = 31	SANDY lean CLAY with GRAVEL, reddish brown

Project No.: 4211.x
Project: City of Roseville - Stauch Drive Tower
Source of Sample: B-1 **Depth:** 0-5'
Sample Number: Bulk A
Date: 6/18/2022

Tested by: BRL
Checked by: RBL

Remarks:
21% retained on the #4 sieve, sample batched

R-VALUE TEST REPORT

Blackburn Consulting

Figure _____

Rock Core Compression Tests

BCI File No.: 4211.X
Project Name: City of Roseville - Strauch Drive Equipment Installation **Date: 6/15/22**

Specimen	Boring	Depth (ft.)	FINAL TRIM LENGTH (in.)	ORIGINAL LENGTH (in.)	DIAMETER (in.)	AREA ($in.^2$)	TOTAL LOAD (lbs.)	COMP STRENGTH (psi)	L/D RATIO	CORE WEIGHT (grams)	UNIT WEIGHT (pcf)
R1	**B1**	**15.5-16**	4.98	12.0	2.40	4.522	8120	**1,796**	2.08	817.9	138.38
R2	**B1**	**19-19.5**	4.77	10.0	2.39	4.484	8090	**1,804**	2.00	854.9	152.27

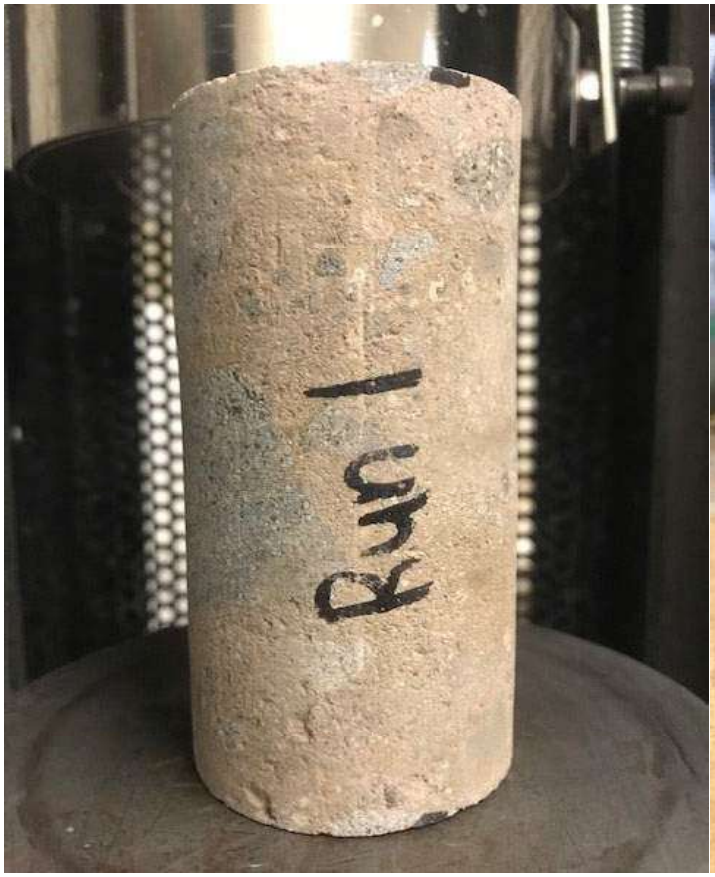
Run 1

Run 1

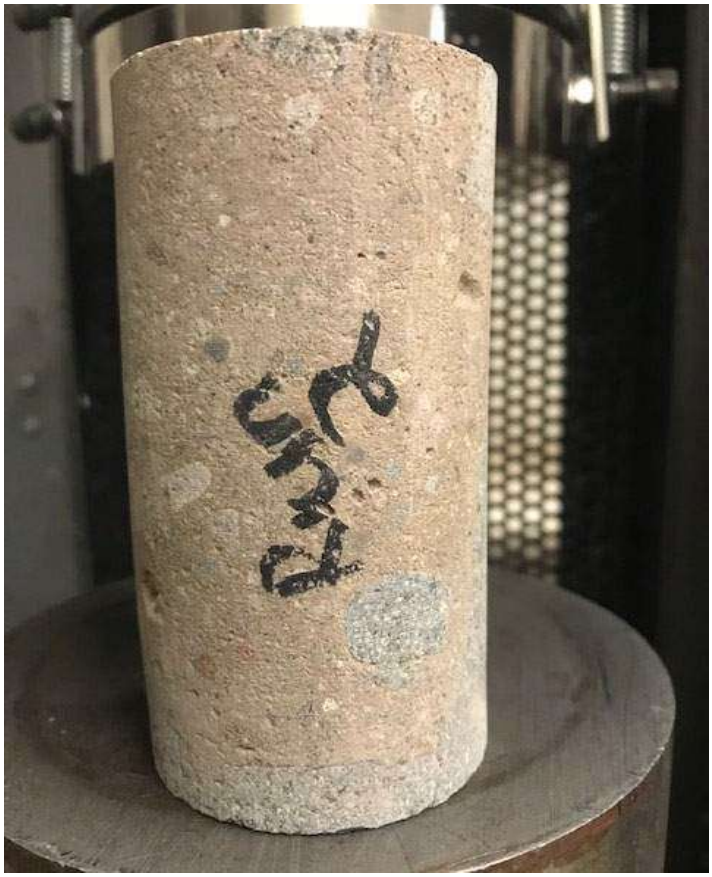
Run 2

Run 2

Particle Size Distribution Report

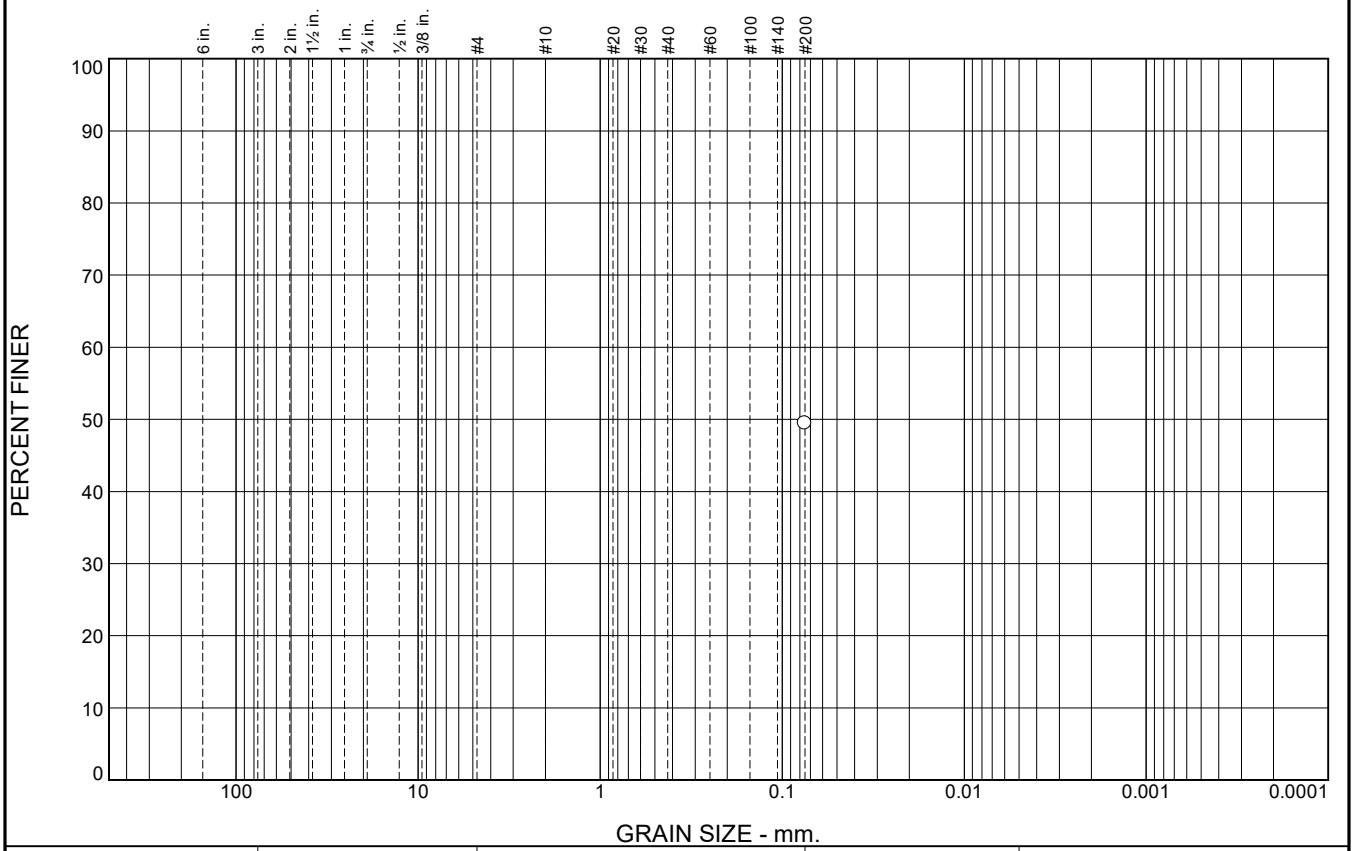

% +3"	% Gravel	% Sand	% Silt	% Clay
				49.5

SIEVE SIZE	PERCENT FINER	SPEC.* PERCENT	PASS? (X=NO)
#200	49.5		

* (no specification provided)

Material Description

SILTY SAND, yellowish red

Atterberg Limits

PL= 26 LL= 37 PI= 11

Coefficients

D_{90}= D_{85}= D_{60}=
D_{50}= D_{30}= D_{15}=
D_{10}= C_u= C_c=

Classification

USCS= SM AASHTO=

Remarks

Source of Sample: B-1 **Depth:** 3.5-4'
Sample Number: 1C **Date:**

Blackburn Consulting

W. Sacramento, CA

Client: City of Roseville
Project: City of Roseville - Stauch Drive Tower

Project No: 4211.x **Figure**

Particle Size Distribution Report

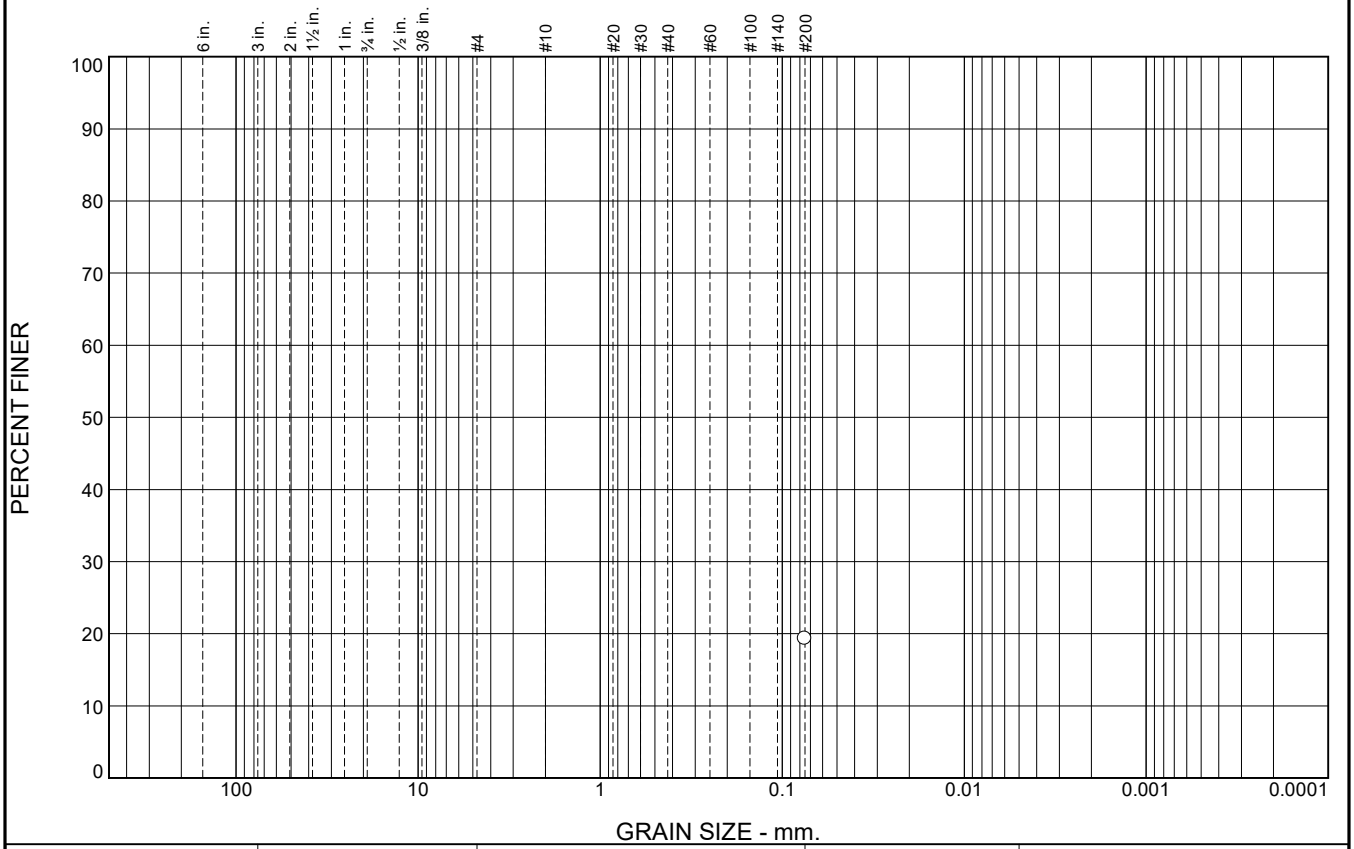

% +3"	% Gravel	% Sand	% Silt	% Clay
				19.3

SIEVE SIZE	PERCENT FINER	SPEC.* PERCENT	PASS? (X=NO)
#200	19.3		

* (no specification provided)

Material Description

yellowish red

Atterberg Limits

PL= LL= PI=

Coefficients

D_{90}= D_{85}= D_{60}=
D_{50}= D_{30}= D_{15}=
D_{10}= C_u= C_c=

Classification

USCS= AASHTO=

Remarks

Source of Sample: B-1 **Depth:** 5.5-6'
Sample Number: 2B **Date:**

Blackburn Consulting

W. Sacramento, CA

Client: City of Roseville
Project: City of Roseville - Stauch Drive Tower

Project No: 4211.x **Figure**

Particle Size Distribution Report

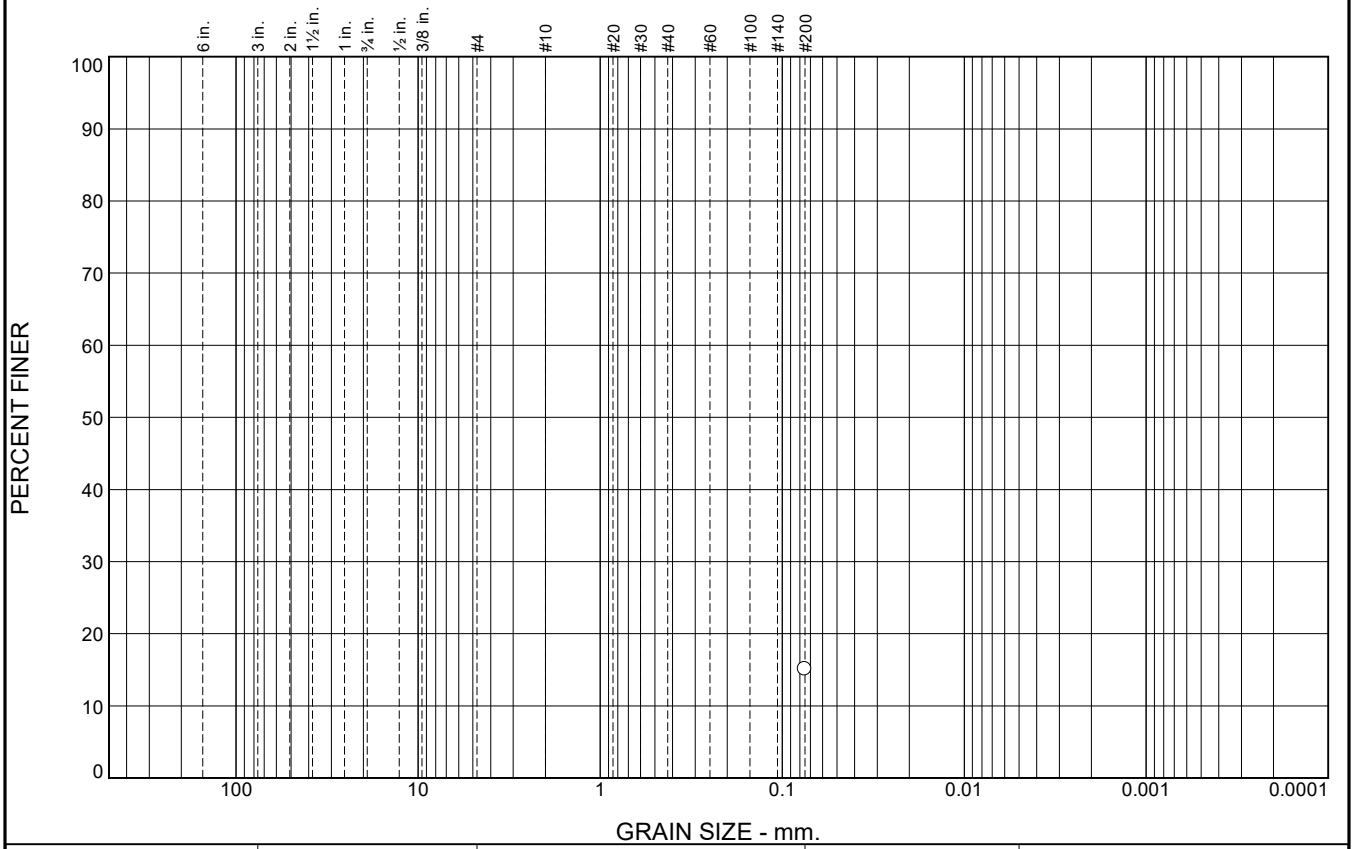

% +3"	% Gravel	% Sand	% Silt	% Clay
				15.1

SIEVE SIZE	PERCENT FINER	SPEC.* PERCENT	PASS? (X=NO)
#200	15.1		

* (no specification provided)

Material Description

SILTY SAND

Atterberg Limits

PL= LL= PI=

Coefficients

D_{90}= D_{85}= D_{60}=
D_{50}= D_{30}= D_{15}=
D_{10}= C_u= C_c=

Classification

USCS= AASHTO=

Remarks

Source of Sample: B-1 **Depth:** 6-6.5'
Sample Number: 2C **Date:**

Blackburn Consulting

W. Sacramento, CA

Client: City of Roseville
Project: City of Roseville - Stauch Drive Tower

Project No: 4211.x **Figure**

LIQUID AND PLASTIC LIMITS TEST REPORT

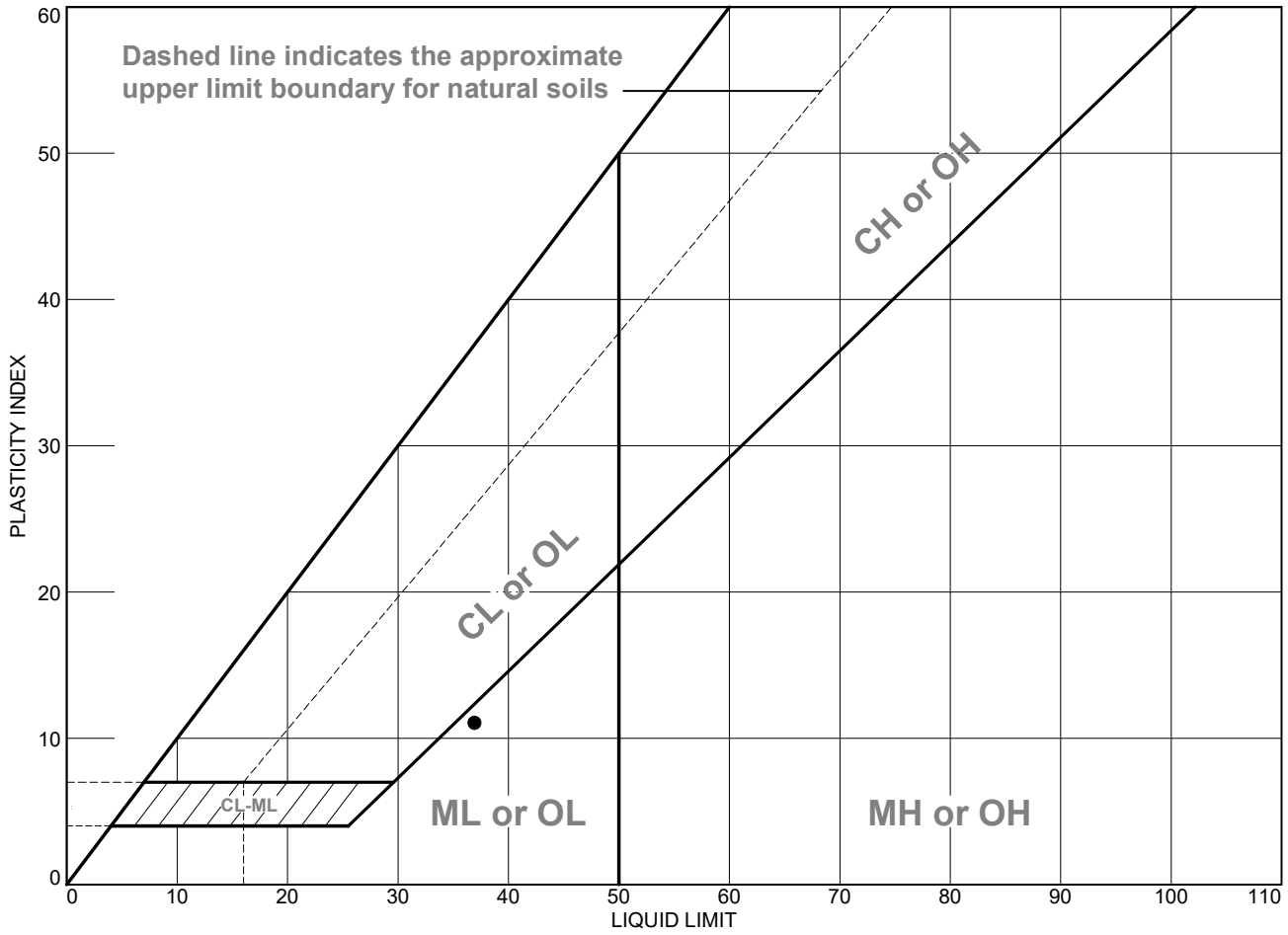

	MATERIAL DESCRIPTION	LL	PL	PI	%<#40	%<#200	USCS
●	SILTY SAND, yellowish red	37	26	11		49.5	SM

Project No. 4211.x **Client:** City of Roseville

Project: City of Roseville - Stauch Drive Tower

●**Source of Sample:** B-1 **Depth:** 3.5-4' **Sample Number:** 1C

Remarks:

Blackburn Consulting

W. Sacramento, CA

Figure

Sunland Analytical

11419 Sunrise Gold Circle, #10
Rancho Cordova, CA 95742
(916) 852-8557

Date Reported 06/22/2022
Date Submitted 06/16/2022

To: Haze Rodgers
Blackburn Consulting (W.SAC)
2491 Boatman Ave
West Sacramento, CA 95691

From: Gene Oliphant, Ph.D. \ Randy Horney
General Manager \ Lab Manager

The reported analysis was requested for the following location:
Location : 4211.X STRAUCH DRIVE Site ID : B1-1B.
Thank you for your business.

* For future reference to this analysis please use SUN # 87599-182188.

EVALUATION FOR SOIL CORROSION

Soil pH	5.61	
Minimum Resistivity	2.47 ohm-cm (x1000)	
Chloride	3.7 ppm	00.00037 %
Sulfate	88.5 ppm	00.00885 %

METHODS
pH and Min.Resistivity CA DOT Test #643
Sulfate CA DOT Test #417, Chloride CA DOT Test #422m

GEOTECHNICAL REPORT

City of Roseville – Strauch drive Tower

Roseville, California

July 2022

APPENDIX C

Important Information about This Geotechnical Engineering Report

BLACKBURN CONSULTING

Important Information about This

Geotechnical-Engineering Report

Subsurface problems are a principal cause of construction delays, cost overruns, claims, and disputes.

While you cannot eliminate all such risks, you can manage them. The following information is provided to help.

The Geoprofessional Business Association (GBA) has prepared this advisory to help you – assumedly a client representative – interpret and apply this geotechnical-engineering report as effectively as possible. In that way, you can benefit from a lowered exposure to problems associated with subsurface conditions at project sites and development of them that, for decades, have been a principal cause of construction delays, cost overruns, claims, and disputes. If you have questions or want more information about any of the issues discussed herein, contact your GBA-member geotechnical engineer. Active engagement in GBA exposes geotechnical engineers to a wide array of risk-confrontation techniques that can be of genuine benefit for everyone involved with a construction project.

Understand the Geotechnical-Engineering Services Provided for this Report

Geotechnical-engineering services typically include the planning, collection, interpretation, and analysis of exploratory data from widely spaced borings and/or test pits. Field data are combined with results from laboratory tests of soil and rock samples obtained from field exploration (if applicable), observations made during site reconnaissance, and historical information to form one or more models of the expected subsurface conditions beneath the site. Local geology and alterations of the site surface and subsurface by previous and proposed construction are also important considerations. Geotechnical engineers apply their engineering training, experience, and judgment to adapt the requirements of the prospective project to the subsurface model(s). Estimates are made of the subsurface conditions that will likely be exposed during construction as well as the expected performance of foundations and other structures being planned and/or affected by construction activities.

The culmination of these geotechnical-engineering services is typically a geotechnical-engineering report providing the data obtained, a discussion of the subsurface model(s), the engineering and geologic engineering assessments and analyses made, and the recommendations developed to satisfy the given requirements of the project. These reports may be titled investigations, explorations, studies, assessments, or evaluations. Regardless of the title used, the geotechnical-engineering report is an engineering interpretation of the subsurface conditions within the context of the project and does not represent a close examination, systematic inquiry, or thorough investigation of all site and subsurface conditions.

Geotechnical-Engineering Services are Performed for Specific Purposes, Persons, and Projects, and At Specific Times

Geotechnical engineers structure their services to meet the specific needs, goals, and risk management preferences of their clients. A geotechnical-engineering study conducted for a given civil engineer will not likely meet the needs of a civil-works constructor or even a different civil engineer. Because each geotechnical-engineering study is unique, each geotechnical-engineering report is unique, prepared *solely* for the client.

Likewise, geotechnical-engineering services are performed for a specific project and purpose. For example, it is unlikely that a geotechnical-engineering study for a refrigerated warehouse will be the same as one prepared for a parking garage; and a few borings drilled during a preliminary study to evaluate site feasibility will not be adequate to develop geotechnical design recommendations for the project.

Do not rely on this report if your geotechnical engineer prepared it:

- for a different client;
- for a different project or purpose;
- for a different site (that may or may not include all or a portion of the original site); or
- before important events occurred at the site or adjacent to it; e.g., man-made events like construction or environmental remediation, or natural events like floods, droughts, earthquakes, or groundwater fluctuations.

Note, too, the reliability of a geotechnical-engineering report can be affected by the passage of time, because of factors like changed subsurface conditions; new or modified codes, standards, or regulations; or new techniques or tools. *If you are the least bit uncertain* about the continued reliability of this report, contact your geotechnical engineer before applying the recommendations in it. A minor amount of additional testing or analysis after the passage of time – if any is required at all – could prevent major problems.

Read this Report in Full

Costly problems have occurred because those relying on a geotechnical-engineering report did not read the report in its entirety. Do not rely on an executive summary. Do not read selective elements only. *Read and refer to the report in full.*

You Need to Inform Your Geotechnical Engineer About Change

Your geotechnical engineer considered unique, project-specific factors when developing the scope of study behind this report and developing the confirmation-dependent recommendations the report conveys. Typical changes that could erode the reliability of this report include those that affect:

- the site's size or shape;
- the elevation, configuration, location, orientation, function or weight of the proposed structure and the desired performance criteria;
- the composition of the design team; or
- project ownership.

As a general rule, *always* inform your geotechnical engineer of project or site changes – even minor ones – and request an assessment of their impact. *The geotechnical engineer who prepared this report cannot accept*

responsibility or liability for problems that arise because the geotechnical engineer was not informed about developments the engineer otherwise would have considered.

Most of the "Findings" Related in This Report Are Professional Opinions

Before construction begins, geotechnical engineers explore a site's subsurface using various sampling and testing procedures. *Geotechnical engineers can observe actual subsurface conditions only at those specific locations where sampling and testing is performed.* The data derived from that sampling and testing were reviewed by your geotechnical engineer, who then applied professional judgement to form opinions about subsurface conditions throughout the site. Actual sitewide-subsurface conditions may differ – maybe significantly – from those indicated in this report. Confront that risk by retaining your geotechnical engineer to serve on the design team through project completion to obtain informed guidance quickly, whenever needed.

This Report's Recommendations Are Confirmation-Dependent

The recommendations included in this report – including any options or alternatives – are confirmation-dependent. In other words, they are not final, because the geotechnical engineer who developed them relied heavily on judgement and opinion to do so. Your geotechnical engineer can finalize the recommendations *only after observing actual subsurface conditions* exposed during construction. If through observation your geotechnical engineer confirms that the conditions assumed to exist actually do exist, the recommendations can be relied upon, assuming no other changes have occurred. *The geotechnical engineer who prepared this report cannot assume responsibility or liability for confirmation-dependent recommendations if you fail to retain that engineer to perform construction observation.*

This Report Could Be Misinterpreted

Other design professionals' misinterpretation of geotechnical-engineering reports has resulted in costly problems. Confront that risk by having your geotechnical engineer serve as a continuing member of the design team, to:

- confer with other design-team members;
- help develop specifications;
- review pertinent elements of other design professionals' plans and specifications; and
- be available whenever geotechnical-engineering guidance is needed.

You should also confront the risk of constructors misinterpreting this report. Do so by retaining your geotechnical engineer to participate in prebid and preconstruction conferences and to perform construction-phase observations.

Give Constructors a Complete Report and Guidance

Some owners and design professionals mistakenly believe they can shift unanticipated-subsurface-conditions liability to constructors by limiting the information they provide for bid preparation. To help prevent the costly, contentious problems this practice has caused, include the complete geotechnical-engineering report, along with any attachments or appendices, with your contract documents, *but be certain to note conspicuously that you've included the material for information purposes only.* To avoid misunderstanding, you may also want to note that "informational purposes" means constructors have no right to rely on the interpretations, opinions, conclusions, or recommendations in the report. Be certain that constructors know they may learn about specific project requirements, including options selected from the report, *only* from the design drawings and specifications. Remind constructors that they may perform their own studies if they want to, and *be sure to allow enough time* to permit them to do so. Only then might you be in a position to give constructors the information available to you, while requiring them to at least share some of the financial responsibilities stemming from unanticipated conditions. Conducting prebid and preconstruction conferences can also be valuable in this respect.

Read Responsibility Provisions Closely

Some client representatives, design professionals, and constructors do not realize that geotechnical engineering is far less exact than other engineering disciplines. This happens in part because soil and rock on project sites are typically heterogeneous and not manufactured materials with well-defined engineering properties like steel and concrete. That lack of understanding has nurtured unrealistic expectations that have resulted in disappointments, delays, cost overruns, claims, and disputes. To confront that risk, geotechnical engineers commonly include explanatory provisions in their reports. Sometimes labeled "limitations," many of these provisions indicate where geotechnical engineers' responsibilities begin and end, to help others recognize their own responsibilities and risks. *Read these provisions closely.* Ask questions. Your geotechnical engineer should respond fully and frankly.

Geoenvironmental Concerns Are Not Covered

The personnel, equipment, and techniques used to perform an environmental study – e.g., a "phase-one" or "phase-two" environmental site assessment – differ significantly from those used to perform a geotechnical-engineering study. For that reason, a geotechnical-engineering report does not usually provide environmental findings, conclusions, or recommendations; e.g., about the likelihood of encountering underground storage tanks or regulated contaminants. *Unanticipated subsurface environmental problems have led to project failures.* If you have not obtained your own environmental information about the project site, ask your geotechnical consultant for a recommendation on how to find environmental risk-management guidance.

Obtain Professional Assistance to Deal with Moisture Infiltration and Mold

While your geotechnical engineer may have addressed groundwater, water infiltration, or similar issues in this report, the engineer's services were not designed, conducted, or intended to prevent migration of moisture – including water vapor – from the soil through building slabs and walls and into the building interior, where it can cause mold growth and material-performance deficiencies. Accordingly, ***proper implementation of the geotechnical engineer's recommendations will not of itself be sufficient to prevent moisture infiltration. Confront the risk of moisture infiltration*** by including building-envelope or mold specialists on the design team. ***Geotechnical engineers are not building-envelope or mold specialists.***

GEOPROFESSIONAL BUSINESS ASSOCIATION

Telephone: 301/565-2733
e-mail: info@geoprofessional.org www.geoprofessional.org

Copyright 2019 by Geoprofessional Business Association (GBA). Duplication, reproduction, or copying of this document, in whole or in part, by any means whatsoever, is strictly prohibited, except with GBA's specific written permission. Excerpting, quoting, or otherwise extracting wording from this document is permitted only with the express written permission of GBA, and only for purposes of scholarly research or book review. Only members of GBA may use this document or its wording as a complement to or as an element of a report of any kind. Any other firm, individual, or other entity that so uses this document without being a GBA member could be committing negligent or intentional (fraudulent) misrepresentation.

Mitigation Monitoring and Reporting Program

CEQA Mitigation Monitoring and Reporting Program

East Site Radio Communication Tower: Emergency and Daily Operational Services Project

August 2022

East Site Radio Communication Tower: Emergency and Daily Operational Services Project

MITIGATION MONITORING AND REPORTING PROGRAM

Introduction

Public Resources Code section 21081.6 and section 15097 of the California Environmental Quality Act (CEQA) Guidelines require public agencies to adopt a monitoring or reporting program for projects approved under CEQA that require implementation of mitigation measures as part of project approval.

The following is the Mitigation Monitoring and Reporting Program (MMRP) for the East Site Radio Communication Tower: Emergency and Daily Operational Services Project (proposed project). The intent of the MMRP is to aid the City of Roseville with implementation and monitoring of mitigation measures adopted as part of the East Site Radio Communications Tower Initial Study/Mitigated Negative Declaration (IS/MND).

The following mitigation measures are from the *East Site Radio Communication Tower: Emergency and Daily Operational Services Project Final Subsequent IS/MND* and are the responsibility of the City to implement. As stated in Section 1.3 (Documents Incorporated by Reference) of the Subsequent IS/MND, the WRSP EIR, inclusive of all CEQA analyses and documentation) are incorporated by reference, including the WRSP MMRP. This MMRP describes the *additional* actions that must take place to implement each mitigation measure, the timing of those actions, and the entities responsible for implementing and monitoring the actions.

MMRP Components

The components of the attached table, which contains applicable mitigation measures, are addressed briefly, below.

Impact: This column summarizes the impact identified in the Final Subsequent IS/MND.

Mitigation Measures: All applicable mitigation measures from the WRSP EIR are incorporated by reference, and mitigation measures specifically identified in the Roseville Regional Sports Complex Project Subsequent IS/MND are presented herein.

Action(s): For every mitigation measure, one or more actions are described. The actions delineate the means by which the mitigation measures will be implemented, and, in some instances, the criteria for determining whether a measure has been successfully implemented. Where mitigation measures are particularly detailed, the action may refer back to the measure for specifics.

Implementing Party: This item identifies the entity that will undertake the required action.

Timing: Implementation of the action must occur prior to or during some part of project approval, project design or construction or on an ongoing basis. The timing for each measure is identified.

Monitoring Party: The City of Roseville Development Services Department, in coordination with the Public Works Department, is primarily responsible for ensuring that mitigation measures are successfully implemented. Within the City of Roseville, a number of departments and divisions could have responsibility for monitoring some aspect of the overall project. Other agencies may also be responsible for monitoring the implementation of mitigation measures. As a result, more than one monitoring party may be identified.

East Site Radio Communication Tower Project, Mitigation Monitoring and Reporting Program					
Impact	**Mitigation Measures**	**Action(s)**	**Implementing Party**	**Timing**	**Monitoring Party**
Biological Resources					
Potential for impacts to nesting birds	**Mitigation Measure BIO-1: Implement Measures to Protect Nesting Bird Species** If tree removal or other ground-disturbing activities are to begin during the breeding/nesting season for raptors or other protected bird species in the region (generally February 1 through August 31), a qualified biologist shall be retained by the City to conduct pre-construction surveys in areas of suitable nesting habitat within two weeks prior to initiation of tree removal or ground disturbance. The pre-construction surveys shall be submitted to the City's Planning Division. If active nests are not found, further mitigation is not required. If active nests are found, the construction contractor shall avoid impacts on such nests by establishing a no-disturbance buffer around the nest. The appropriate buffer size for all nesting birds shall be determined by a qualified biologist. Buffer size will vary depending on site-specific conditions, the species of nesting bird, nature of the project activity, the extent of existing disturbance in the area, visibility of the disturbance from the nest site, and other relevant circumstances. Construction activity shall not occur within the buffer area of an active nest and nests shall be monitored by a qualified biologist until a qualified biologist confirms that the chicks have fledged and are no longer dependent on the nest, or the nesting cycle has otherwise completed. Monitoring of the nest by a qualified biologist during construction activities.	Implement actions as required by MM BIO-1.	Contractor, City of Roseville Public Works and Development Services Departments	Prior to construction	Contractor, City of Roseville Development Services Department
Cultural Resources					
	Mitigation Measure CUL-1: Implement Measures to Protect Previously Unidentified Cultural Resources The City shall ensure that construction specifications include the following information in the grading notes: • Construction shall stop if potential cultural resources are encountered. It is possible that previous activities have obscured surface evidence of cultural resources. If signs of an archeological site, such as any unusual amounts of stone, bone, or shell, are uncovered during grading or other construction activities, work shall be halted within 100 feet of the find and the City of Roseville will be notified. A qualified archeologist shall be consulted for an onsite evaluation. If the site appears to be eligible for listing in State or federal registers, additional mitigation, such as further testing for evaluation or data recovery, may be necessary. • In the event resources are discovered, the City shall retain a qualified archaeologist to assess the find and to determine whether the resource requires further study. Any previously undiscovered resources found during construction shall be recorded on appropriate California Department of Parks and Recreation 523 forms and evaluated for significance under all applicable regulatory criteria. • All work shall stop in the immediate vicinity of the find, and, if the find is determined to be an important cultural resource, the City shall make available contingency funding and a time allotment sufficient to allow recovery of an archaeological sample or to implement an avoidance measure. Construction work may continue on other parts of the project while archaeological mitigation takes place.	Stop work if potential tribal cultural resources are encountered during ground-disturbing activities and have a qualified archaeologist, in consultation with culturally affiliated tribes, evaluate the find and develop a response plan.	Contractor, Qualified Archaeologist, and City of Roseville Development Services Department	Prior to and during construction	Contractor, City of Roseville Development Services Department

Tribal Cultural Resources					
Potential for impacts to tribal cultural resources	**Mitigation Measure TCR-1: Tribal Monitoring** The Construction Manager shall retain one tribal monitor to monitor all vegetation clearing and removal, and all initial surface grading of the project area, down to, for footings, 40 feet below the surface. Tribal monitoring is not required during above-surface construction activities, or when excavating or re-excavating imported fill. Tribal Monitoring is required for soil which has already been previously disturbed as part of the construction project. The tribal monitor shall have the authority to temporarily pause ground disturbance within 100 feet of the discovery for a duration long enough to examine potential tribal cultural resources that may become unearthed during the activity. If tribal cultural resources or features are not identified, then construction activities shall proceed and agency notifications are not required. In the event that additional features of the Tribal Cultural Resource are identified, the unanticipated discovery procedures in Mitigation Measure TCR-2 shall be implemented. The tribal monitor shall maintain daily monitoring logs, which shall be submitted to the City's Project Manager no later than the conclusion of the monitoring as proof of compliance. **Mitigation Measure TCR-2: Anticipated and Unanticipated Discover Procedures** If additional subsurface deposits believed to be cultural or human in origin, or tribal cultural resources, are discovered during construction, all work shall halt within a 100-foot radius of the discovery, and the Construction Manager shall immediately notify the City of Roseville Development Services Director by phone. The Construction Manager shall also immediately coordinate with the tribal monitor, or, in the absence of either, contact a qualified professional archaeologist, meeting the Secretary of the Interior's Professional Qualification Standards for archaeology and subject to approval by the City, to evaluate the significance of the find and develop appropriate management recommendations. All management recommendations shall be provided to the City in writing for the City's review and approval. If recommended by the qualified professional and approved by the City, this may include modification of the no-work radius. The UAIC and Tribal Monitor shall make a determination, based on professional judgement and supported by substantial evidence, within one business day of being notified, as to whether or not the find represents a tribal cultural resource. The subsequent actions will be determined by the type of discovery, as described below. These include: 1) a work pause that, upon further investigation, is not actually a discovery and the work pause was simply needed in order to allow for closer examination of soil (a "false alarm"); 2) a work pause and subsequent action for discoveries that are clearly not related to tribal resources, such as can and bottle dumps, artifacts of European origin, and remnants of built environment features; and 3) a work pause and subsequent action for discoveries that are likely related to tribal resources, such as midden soil, bedrock mortars, groundstone, or other similar expressions. Whenever there is question as to whether or not the discovery represents a tribal resource, culturally affiliated tribes shall be consulted in making the determination. Whenever a tribal monitor is present, the monitor shall be consulted. The following processes shall apply, depending on the nature of the find, subject to the review and approval of the City: • Response to False Alarms: If the Tribal Monitor determines that the find is negative for any cultural indicators, then work may resume immediately upon notice to proceed from the City's representative. No further notifications or tribal consultation is necessary, because the discovery is not a cultural resource of any kind. The Tribal Monitor or UAIC shall provide written documentation of this finding to the Project Manager this documentation may include the monitor logs or e-mail notification. • Response to Non-Tribal Discoveries: If a tribal monitor is not present at the time of discovery and the City shall be notified immediately, to consult on a finding of eligibility and implementation of appropriate treatment measures, if the find is determined to be a Historical Resource under CEQA, as defined in Section 15064.5(a) of the CEQA Guidelines. The City of Roseville will notify any [tribe(s)] who, in writing, requested notice of unanticipated discovery of non-tribal resources. Notice shall include the photograph and description of the find, and a tribal representative shall have the opportunity to determine whether or not the find represents a tribal cultural resource. • If a response is not received within 24 hours of notification (none of which time period may fall on weekends or City holidays), the City will deem this portion of the measure completed in good faith as long as the notification was made and documented. If requested by a [tribe(s)], the City may extend this timeframe, which shall be documented in writing (electronic communication may be used to satisfy this measure). If a notified tribe responds within 24 hours to indicate that the find represents a tribal cultural resource, then the Response to Tribal Discoveries portion of this measure applies. If the tribe does not respond or concurs that the discovery is non-tribal, work shall not resume within the no-work radius until the City, through consultation as appropriate, determines that the site either: 1) is not a Historical Resource under CEQA, as defined in Section 15064.5(a) of the CEQA Guidelines; or 2) that the treatment measures have been completed to its satisfaction.	Implement tribal monitoring. Stop work if potential tribal cultural resources are encountered during ground-disturbing activities and have a qualified archaeologist, in consultation with culturally affiliated tribes, evaluate the find and develop a response plan.	Contractor, Qualified Archaeologist, and City of Roseville Public Works and Development Services Departments	Prior to and during construction	Contractor, City of Roseville Development Services Department

	(Mitigation Measure TCR-2: Anticipated and Unanticipated Discover Procedures Continued) • Response to Tribal Discoveries: If the find represents a tribal or potentially tribal cultural resource that does not include human remains, the tribe and City shall be notified. The City will consult with the tribe on a finding of eligibility and implement appropriate treatment measures, if the find is determined to be either a Historical Resource under CEQA, as defined in Section 15064.5(a) of the CEQA Guidelines, or a Tribal Cultural Resource, as defined in Section 21074 of the Public Resources Code. Preservation in place is the preferred treatment, if feasible. Work shall not resume within the no-work radius until the City, through consultation as appropriate, determines that the site either: 1) is not a Historical Resource under CEQA, as defined in Section 15064.5(a) of the CEQA Guidelines; or 2) not a Tribal Cultural Resource, as defined in Section 21074 of the Public Resources Code; or 3) that the treatment measures have been completed to its satisfaction. • Response to Human Remains: If the find includes human remains, or remains that are potentially human, the construction supervisor or on-site archaeologist shall ensure reasonable protection measures are taken to protect the discovery from disturbance (AB 2641) and shall notify the City and Placer County Coroner (per § 7050.5 of the Health and Safety Code). The provisions of § 7050.5 of the California Health and Safety Code, § 5097.98 of the California Public Resources Code, and Assembly Bill 2641 shall be implemented. If the Coroner determines the remains are Native American and not the result of a crime scene, the Coroner will notify the Native American Heritage Commission (NAHC), which then will designate a Native American Most Likely Descendant (MLD) for the project (§ 5097.98 of the Public Resources Code). The designated MLD will have 48 hours from the time access to the property is granted to make recommendations concerning treatment of the remains. Public Resources Code § 5097.94 provides structure for mediation through the NAHC if necessary. If the landowner does not agree with the recommendations of the MLD, the NAHC can mediate (§ 5097.94 of the Public Resources Code). If no agreement is reached, the landowner must rebury the remains in a respectful manner where they will not be further disturbed (§ 5097.98 of the Public Resources Code). This will also include either recording the site with the NAHC or the appropriate Information Center; using an open space or conservation zoning designation or easement; or recording a reinternment document with the county in which the property is located (AB 2641). Work shall not resume within the no-work radius until the City, through consultation as appropriate, determines that the treatment measures have been completed to its satisfaction. **Mitigation Measure TCR-3: Restoration Location Designation** Following the completion of ground disturbance soil will be retained on site, and at a mutually agreed upon time, a location shall be selected for reburial and/or placement of soil to restore all cultural items or cultural soils to the TCR. The location selected shall be under the control of the property owner, in an area not planned for future disturbance, and can accommodate the recording of a deed restriction, should the reburial location be utilized for the project. A copy of a map showing the reburial location shall be filed with the City for proof of compliance prior to construction and shall remain confidential. A deed restriction over the reburial location need not be filed with the County until materials have been reburied at the selected location. If the reburial location is not utilized for the project, then no further documentation or deed restrictions are required. In the event that human remains or tribal cultural resources are encountered, the consultation and evaluation process in Mitigation Measure TCR-2 for the management of unanticipated discoveries shall be followed. Upon conclusion of that process, the Construction Manager shall rebury specified materials in the location selected for reburial, at the City's direction and discretion. The City shall reserve the right to dictate the nature, methods, and timing of the reburial. Within 30 days of the reburial, and consistent with Section 5097.98(e) of the Public Resources Code, the location of the reburial shall be further recorded by a qualified professional on a DPR 523 Series Primary Record and Location Map and submitted to the North Central Information Center of the California Historical Resources Information Center [5097.98(e)(1)], Native American Heritage Commission, and a reinternment record filed with the County [5097.98(e)(3)]. A copy of the confidential record and transmittal to each repository shall be provided to the City as proof of compliance within 30 days of recording. **Mitigation Measure TCR-4: Install Protective Fencing During Construction** The construction contractor(s), UAIC Representative, and Tribal Monitor will install protective fencing or other acceptable methods around the culturally modified boulders, including a buffer area, before construction starts or restarts. Standard buffer areas are 100 feet, but may be increased or decreased if both the CEQA lead agency representative and affiliated Native American Tribes agree. The construction contractor(s) will maintain the protection throughout construction to avoid the resource/area of sensitivity during all remaining phases of construction. The area will be demarcated as an "Environmentally Sensitive Area". **Mitigation Measure TCR-5: Contribution for Reburial Costs** To fund costs of mitigation to the TCR, a financial contribution, will be made to the Roseville Maidu Museum for Tribal reburial costs. The contribution will be based on impacts documented during tribal monitoring, up to a maximum of $15,000.				

Initial Study/Mitigated Negative Declaration

Initial Study/Mitigated Negative Declaration

East Site Radio Communication Tower: Emergency and Daily Operational Services Project

Prepared for:

CITY OF ROSEVILLE CALIFORNIA

July 2022

Prepared by:

RANEY PLANNING & MANAGEMENT, INC. 20 years

1501 Sports Drive, Suite A, Sacramento, CA 95834

Table of Contents

Chapter 1 Introduction and Summary 1-1
1.1 Introduction 1-1
1.2 CEQA Lead Agency 1-1
1.3 Summary 1-2

Chapter 2 Project Description 2-1
2.1 Project Background 2-1
2.2 Project Location and Existing Conditions 2-1
2.3 Proposed Project Components 2-1
2.3.1 Construction of the Proposed Project 2-1
2.3.2 Radio Communications Tower Operations 2-7
2.4 Best Management Practices (BMPs) 2-7
2.4.1 Construction BMPs 2-7
2.4.1.1 Traffic Management Plan 2-8
2.4.1.2 Noise Control Measures 2-9
2.4.1.3 Hazards and Hazardous Materials Measures 2-9
2.4.2 City of Roseville Mitigating Ordinances 2-9
2.5 Required Entitlements 2-10

Chapter 3 Environmental Checklist 3-1
3.1 Environmental Factors Potentially Affected 3-2
3.2 Determination 3-3
3.2.1 Aesthetics 3-4
3.2.2 Agricultural and Forestry Resources 3-9
3.2.3 Air Quality 3-11
3.2.4 Biological Resources 3-17
3.2.5 Cultural Resources 3-20
3.2.6 Energy 3-23
3.2.7 Geology and Soils 3-26
3.2.8 Greenhouse Gas Emissions 3-29
3.2.9 Hazards and Hazardous Materials 3-31
3.2.10 Hydrology and Water Quality 3-36
3.2.11 Land Use and Planning 3-39
3.2.12 Mineral Resources 3-41
3.2.13 Noise 3-42
3.2.14 Population and Housing 3-47
3.2.15 Public Services 3-48
3.2.16 Recreation 3-50
3.2.17 Transportation 3-51
3.2.18 Tribal Cultural Resources 3-53
3.2.19 Utilities and Service Systems 3-58
3.2.20 Wildfire 3-60
3.2.21 Mandatory Findings of Significance 3-62

Chapter 1
Introduction and Summary

1.1 Introduction

This document is an Initial Study/Mitigated Negative Declaration (IS/MND) that addresses the potential environmental impacts of the East Site Radio Communication Tower: Emergency and Daily Operational Services Project (proposed project) proposed by the City of Roseville (City).

The proposed project would involve the development of a portion of the project site with an unmanned communications tower, with an associated communications building and access driveway. The project site is located east of the intersection of Strauch Drive and Huntington Drive in the City of Roseville, CA. The project site, identified by Assessor's Parcel Number 048-260-032, is undeveloped and contains several species of trees.

The California Environmental Quality Act (CEQA) and Section 15004 of the State CEQA Guidelines encourage early completion of environmental documentation to enable environmental considerations to influence project design. This IS/MND is a public information document that discloses the proposed project's environmental effects and informs decision makers of the project's compliance with CEQA and the State CEQA Guidelines.

This document describes the proposed project's background, project components, the existing environmental setting (conditions before implementation of the project), and the potential environmental impacts of the proposed project. Chapter 2, *Project Description*, describes the proposed project and the best management practice (BMP) measures that the City has incorporated into the proposed project to avoid and minimize potential effects. Chapter 3, *Environmental Checklist*, identifies the anticipated environmental impacts by topic and provides mitigation measures that would be implemented to avoid significant impacts, if warranted.

1.2 CEQA Lead Agency

As the lead agency for the proposed project under CEQA, the City of Roseville determined that preparation of an IS/MND was necessary to evaluate the environmental issues associated with the proposed project and satisfy the requirements of CEQA and the State CEQA Guidelines. The IS/MND is available for public review at the following location:

City of Roseville Permit Center
311 Vernon Street
Roseville, CA 95678
(916) 774-5332

Due to changeable circumstances regarding COVID-19 concerns, the Permit Center hours for in person document review may be limited. Therefore, the public is encouraged to check the City's web site first to ensure in office accommodations are available:

https://www.roseville.ca.us

Alternatively, the IS/MND can also be viewed or downloaded from the City's website via the following link:

https://www.roseville.ca.us/environmentaldocuments

During the review period, written comments may be submitted via email to: *tshirhall@roseville.ca.us*, or sent by regular mail to:

Ms. Terri Shirhall, Environmental Coordinator
City of Roseville, Development Services Department
311 Vernon Street
Roseville, CA 95678

1.3 Summary

This IS/MND concludes that the proposed project would have potentially significant but mitigable impacts on biological resources, cultural resources, and tribal cultural resources, as described in Chapter 3, *Environmental Checklist*. This IS/MND identifies a variety of mitigation measures that the City would implement to avoid or minimize potentially significant impacts on sensitive environmental resources. Implementation of these measures, in addition to project BMPs, would further reduce the potential impacts to a less-than-significant level.

Chapter 2
Project Description

2.1 Project Background

The City of Roseville proposes to allow the construction of the East Site Radio Communication Tower: Emergency and Daily Operational Services Project (proposed project) in the Infill Planning Area of the City of Roseville, California (see Figure 2-1). The proposed project would involve the construction of a radio communications tower, as well as an associated communications building and access roadway.

2.2 Project Location and Existing Conditions

The project site is located east of the intersection of Strauch Drive and Huntington Drive in the City of Roseville, CA. The project site (see Figure 2-2), identified by Assessor's Parcel Number 048-260-032, is undeveloped. The site contains ruderal grassland, several species of trees, including oak, along the perimeter of the site, and a drainage feature that crosses the western portion of the site. Surrounding existing land uses include shopping centers with a variety of retail and commercial uses to the north, east, and southeast; undeveloped land to the south and southwest, across Strauch Drive; and shopping centers to the west and northwest, across Strauch Drive. The City of Roseville General Plan designates the site as Community Commercial (CC) and the site is zoned as Planned Development (PD7).

2.3 Proposed Project Components

The proposed project consists of the following main components:

- Construction of the proposed radio communications tower; and
- Operations/maintenance of the tower.

The specifications of the proposed tower are described in greater detail below.

2.3.1 Construction of the Proposed Project

The proposed project would involve construction of a 180-foot-tall radio communications tower, a 12-foot by 16-foot shelter for the on-site 70 kiloWatt emergency generator, and a 500-gallon propane tank on a portion of the project site (Figure 2-3, Figure 2-4, and Figure 2-5). The emergency generator would be fueled by propane, and all components of the proposed project would be fenced within an approximately 2,483-square-foot enclosure. Vehicle access to the site would be provided by a new 12-foot private maintenance roadway connecting to the parking lot immediately east of the project site.

Figure 2-1
Regional Project Location

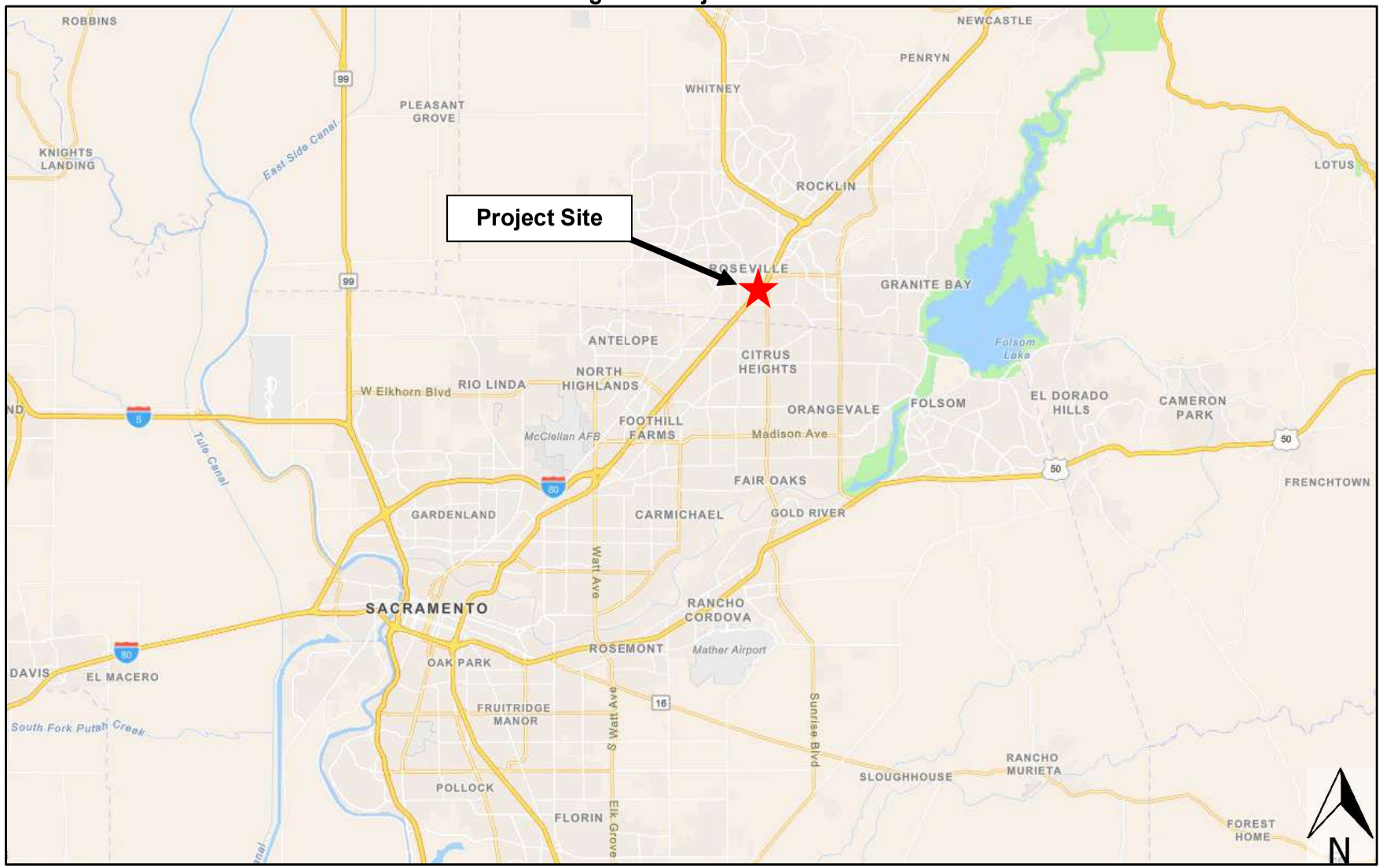

Figure 2-2
Project Site

Figure 2-3
Overall Site Plan

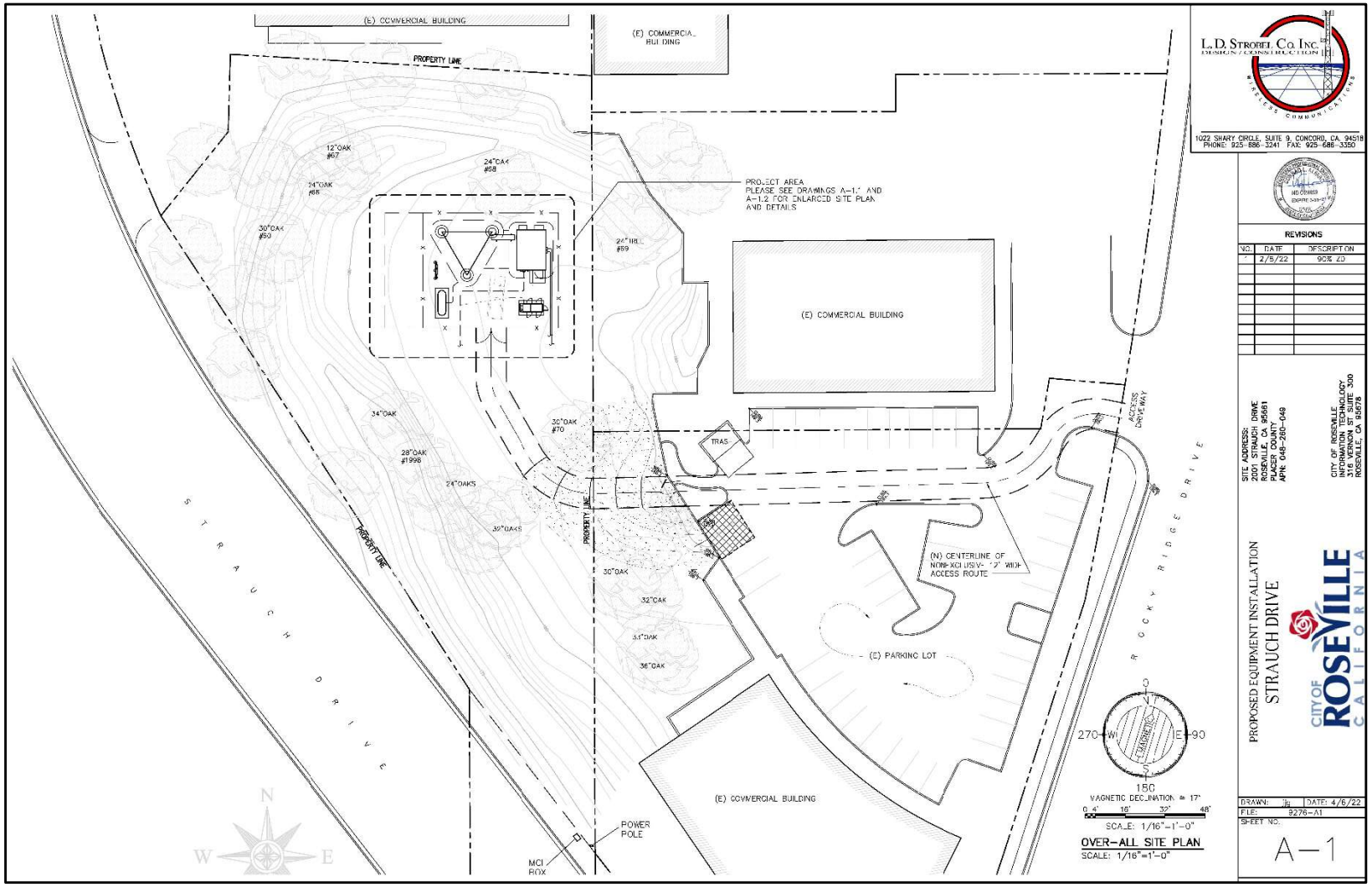

Figure 2-4
Focused Site Plan

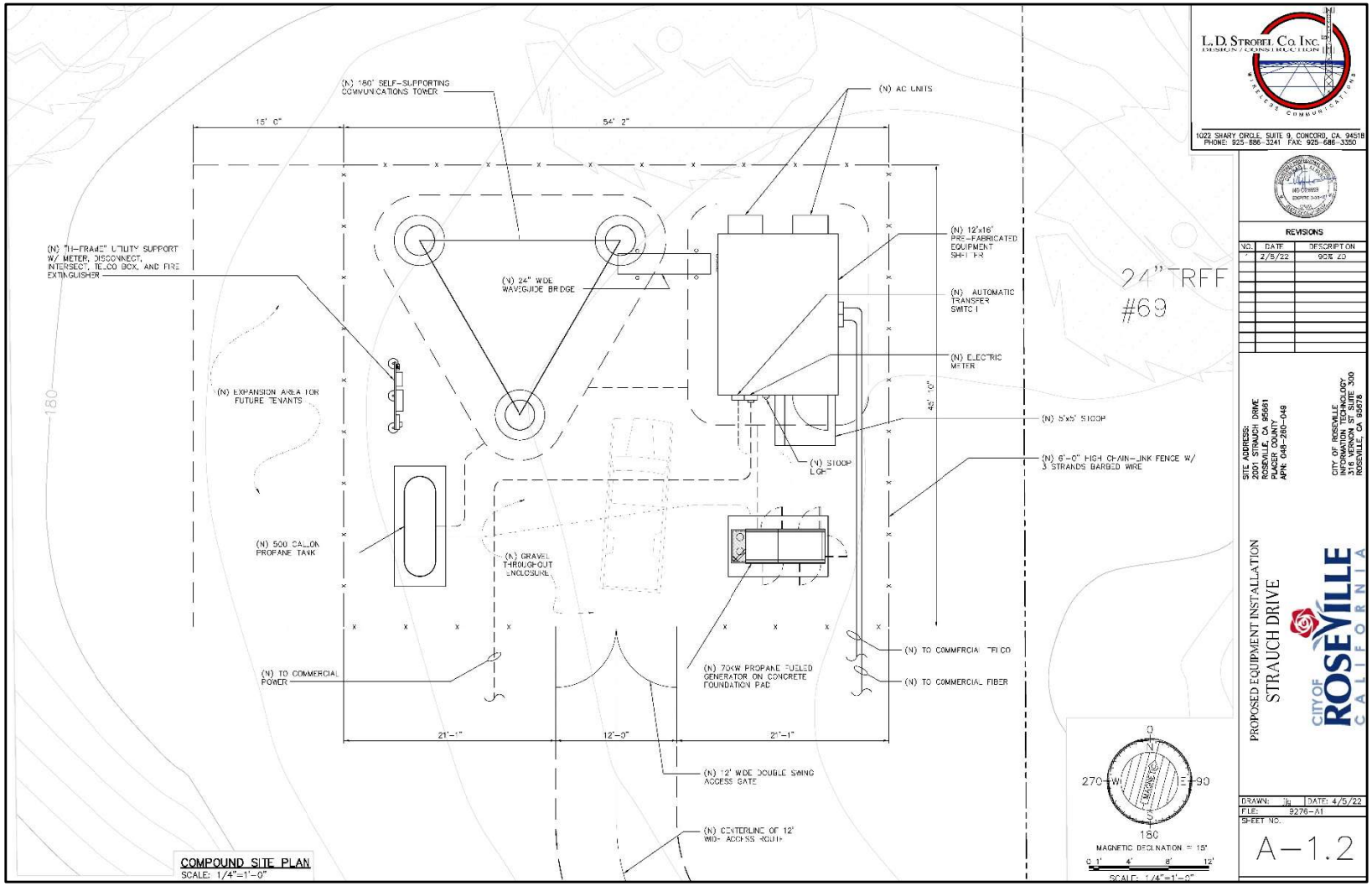

Figure 2-5
Tower Elevations

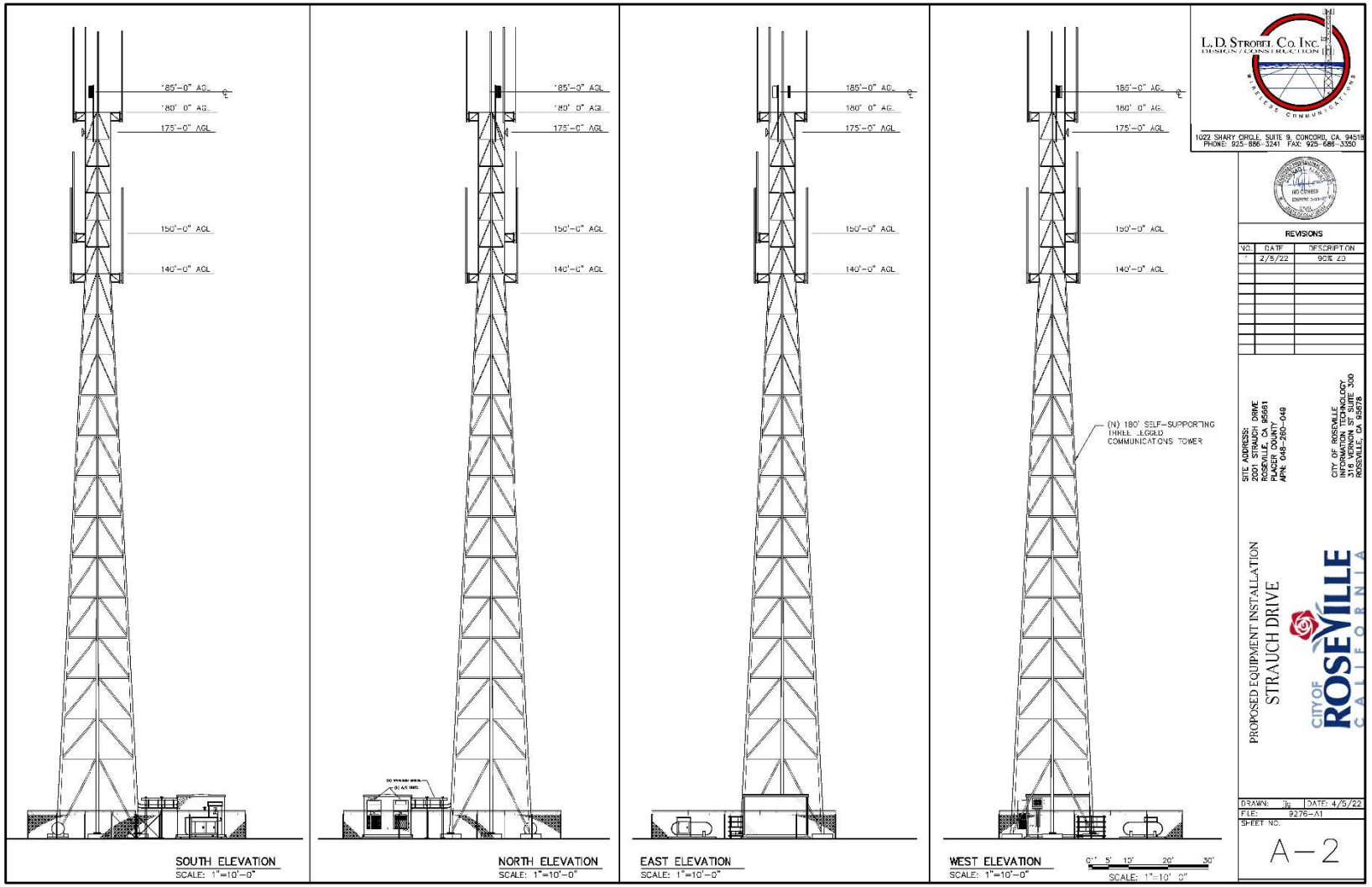

Ground disturbing activities associated with construction of the proposed project would be limited to establishing the tower foundation and access road, assembly of the tower and shelter, and worker vehicle circulation. Additionally, tree removal may occur. Construction activities would take place between 7:00 AM and 7:00 PM Monday through Friday and between 8:00 AM and 8:00 PM Saturday and Sunday, in compliance with the City's Noise Ordinance.

2.3.2 Radio Communications Tower Operations

The proposed radio communications tower would be unmanned and would not require regular staffing. However, occasional site maintenance, including testing of the emergency generator, would be necessary. Maintenance staff would access the project site through the private easement access road that would connect to the commercial parking lot to the east of the project site.

2.4 Best Management Practices (BMPs)

Water quality measures (stormwater management measures and BMPs) would be implemented as part of the project to minimize potential water quality impacts. Key management measures consist of the following:

- Protect areas that provide important water quality benefits or are particularly susceptible to erosion or sediment loss.
- Minimize the potential for erosion by limiting land disturbances such as clearing, grading, and cut and fill.
- Limit disturbance of natural drainage features and vegetation.
- Ensure proper storage and disposal of toxic material.
- Incorporate pollution prevention into operation and maintenance procedures to reduce pollutant loadings to surface runoff.

2.4.1 Construction BMPs

The City and its contractor shall implement construction BMPs to avoid and minimize impacts on sensitive environmental resources. Implementation of the BMPs discussed below would minimize the potential for construction-related surface water pollution and ensure that water quality in off-site waterways and wetlands would not be compromised by erosion and sedimentation during construction.

Temporary Fencing. Where appropriate, the City's contractor shall install construction barrier fencing (including sediment fencing and straw wattles) to prevent contaminants and debris from entering off-site surface waters. Before construction begins, the City or its contractor shall identify the locations for the barrier fencing and mark those locations with stakes or flagging.

Equipment. The City shall comply with applicable stormwater ordinances, stormwater management plans, and BMPs to prevent or minimize the potential release of equipment-related petroleum contaminants into adjacent surface waters and groundwater. Implementation of standard construction procedures and precautions for working with

petroleum and construction chemicals would further ensure that the impacts related to chemical handling during project construction would be minor.

Hazardous Materials. The City shall implement appropriate hazardous material management practices and other good housekeeping measures to reduce the potential for chemical spills or releases of contaminants, including any non-stormwater discharge to adjacent surface waters. Implementation of these measures would minimize the potential for surface and groundwater contamination.

Erosion Control. The project design shall incorporate permanent erosion control elements to ensure that stormwater runoff does not cause soil erosion. Erosion and sediment control plans shall comply with the City's Grading Ordinance, which requires reducing erosion and retaining sediment onsite.

Toxic Materials Control and Spill Response Plan. The following measures shall be incorporated into the plan and implemented to avoid or minimize the risk of spills or discharges of toxic materials into adjacent surface waters:

- Prepare a hazardous material spill prevention, control, and countermeasure plan (SPCC) before construction and implement during construction;
- Prevent raw cement, concrete or concrete washings, asphalt, paint or other coating material, oil or other petroleum products, or any other substances that could be hazardous to aquatic life from contaminating the soil or entering off-site surface waters;
- Prevent discharge of drilling mud and fluids into off-site surface waters by using appropriate containment, disposal, and storage methods;
- Prevent discharge of turbid water or sediment-laden runoff to off-site surface waters by using sediment filters, diverting the water to a settling tank, and/or implementing other erosion and water quality control BMPs;
- Clean up all spills immediately according to the SPCC;
- Provide areas located outside of sensitive environmental areas for staging and storing equipment, materials, fuels, lubricants, solvents, and other possible contaminants; and
- Prevent hazardous materials from entering waters. The construction contractor shall notify the City Fire Department if evidence of soil or groundwater contamination is encountered during construction activities. Construction in that area shall be halted until the Fire Department has evaluated the find and remediation is completed, if necessary.

2.4.1.1 Traffic Management Plan

The City shall require the construction contractor to implement a Traffic Management Plan (TMP), including a construction schedule and plan to meet the City's notice procedures, before construction activities are initiated. This plan shall identify general methods by which construction activities shall be managed to minimize substantial delays to traffic as discussed below.

Communication: Develop and implement a public information campaign that describes the nature and duration of construction activities and when construction related temporary "controlled conditions" and/or travel delays are expected. Particular attention shall be placed on special events (e.g., school graduations or Placer County Fairgrounds events) that may attract unfamiliar users to the City's roadway system. The City is currently doing public outreach and shall continue the outreach program throughout project design and construction.

Construction: Describe and analyze the number of employees and their site parking areas, and the number of trucks, their routing and staging, and operating hours.

Wayfinding: Position and operate changeable message sign (CMS) trailers at strategic locations and employ other temporary signage as necessary to advise motorists, pedestrians and bicyclists of pending construction activities and alternate routes.

Emergency Vehicle Response: The contractor shall coordinate with City Police and Fire Departments to ensure that all potential effects of construction traffic controls are clearly communicated understood by public safety providers.

2.4.1.2 Noise Control Measures

The following measures shall be incorporated into the construction specifications for the proposed project to reduce and control noise generated by construction-related activities, consistent with City ordinances and standards:

- Noise-generating construction activities from the City's construction contractor shall be restricted consistent with the City's Noise Ordinance (Monday through Friday from 7:00 AM to 7:00 PM, and Saturday and Sunday from 8:00 AM to 8:00 PM);
- All construction equipment shall have sound-control devices no less effective than those provided on the original equipment. No equipment shall have an unmuffled exhaust; and
- Appropriate additional noise-reducing measures shall be implemented, including the following: stationary construction equipment shall be located as far as possible from sensitive uses; sensitive uses shall be identified on construction drawings; and excessive equipment idling shall be prohibited when the equipment is not in use.

2.4.1.3 Hazards and Hazardous Materials Measures

The construction documents shall identify materials that are considered hazardous. The project contractor shall be required to develop a Health and Safety Plan (prepared by a registered industrial hygienist) that addresses release prevention measures; employee training, notification, and evacuation procedures; and adequate emergency response protocols and cleanup procedures.

The contractor shall comply with the California Occupational Safety and Health Administration standards for the storage and handling of fuels, flammable materials, and common construction-related hazardous materials and for fire prevention (California Labor Code, Division 5, Chapter 2.5).

2.4.2 City of Roseville Mitigating Ordinances

As part of the proposed project, the City shall implement the following regulations and ordinances to reduce potential environmental impacts associated with the project:

- Noise Regulation (Roseville Municipal Code [RMC] Ch.9.24);
- Urban Stormwater Quality Management and Discharge Control Ordinance (RMC Ch.14.20);
- Stormwater Quality Design Manual (Resolution 07-432);
- City of Roseville Design and Construction Standards (Resolution 07-137); and
- Community Design Guidelines (Resolution 95-347).

2.5 Required Entitlements

Required permits and approvals are shown in Table 2-1. Local approvals required to construct and operate the proposed project include adoption of the Mitigated Negative Declaration and Mitigation Monitoring and Reporting Plan by the City Council and approval of the project plans and specifications and construction contract. The City must also submit applications to the Federal Communications Commission (FCC) and the Federal Aviation Administration (FAA) to reflect the new site coordinates.

Table 2-1: Permits and Approvals Needed for the Proposed Project

Agency	Permit/Approval
City of Roseville	Adoption of the Mitigated Negative Declaration
City of Roseville	Approval of the Mitigation Monitoring and Reporting Plan
City of Roseville	Approval of Plans and Specifications and Construction Contract
FCC	Approval of New Site Coordinates
FAA	Approval of New Site Coordinates

Chapter 3
Environmental Checklist

1.	**Project Title:**	East Site Radio Communication Tower: Emergency and Daily Operational Services Project
2.	**Lead Agency Name and Address:**	City of Roseville 311 Vernon Street Roseville, CA 95678
3.	**Contact Person and Phone Number:**	Terri Shirhall Environmental Coordinator Development Services Department (916) 774-5362
4.	**Project Location:**	The project site, identified by Assessor's Parcel Number 048-260-032, is located east of the intersection of Strauch Drive and Huntington Drive in the City of Roseville, CA.
5.	**Project Sponsor's Name and Address:**	City of Roseville Department of Information Technology Hong Sae, Chief Information Officer, Information Technology 316 Vernon Street, Suite 300 Roseville, CA 95678
6.	**General Plan Designation:**	Community Commercial (CC)
7.	**Zoning:**	Planned Development (PD7)

8. Description of Project:

The proposed project would include the development of a portion of the project site with a 180-foot-tall radio communications tower, a 12-foot by 16-foot shelter, a 60-kiloWatt emergency generator, and 500-gallon propane tank. An access driveway would be provided from the parking lot of the adjacent property to the east. Ground disturbing activities associated with construction of the proposed project would be limited to establishing the tower foundation, assembly of the tower and shelter, and worker vehicle circulation.

9. Surrounding Land Uses and Setting:

The site contains several species of trees, including oak, along the perimeter of the site, and a drainage feature crosses the western portion of the site. Surrounding existing land uses include shopping centers with a variety of retail and commercial uses to the north, east, and southeast; undeveloped land to the south and southwest, across Strauch Drive; and shopping centers to the west and northwest, across Strauch Drive.

10. Other Public Agencies Whose Approval is Required:

None.

11. Have California Native American tribes traditionally and culturally affiliated with the project area requested consultation pursuant to Public Resources Code section 21080.3.1? If so, has consultation begun?

On March 29, 2022, the City of Roseville sent certified letters to the Tribes listed below requesting consultation and/or information regarding tribal resources in the project area. The letters requested a response within 30 days. The United Auburn Indian Community of the Auburn Rancheria (UAIC) initiated consultation on June 3, 2022, and consultation was closed with mutual agreement on July 7, 2022. Wilton Rancheria also requested consultation on May 3, 2022, but did not respond to the City's attempts at communication, therefore the City closed consultation on July 8, 2022.

- United Auburn Indian Community of the Auburn Rancheria;
- Shingle Springs Band of Miwok Indians;
- Tsi Akim Maidu;
- Ione Band of Miwok Indians; and
- Wilton Rancheria.

3.1 Environmental Factors Potentially Affected

The environmental factors checked below would potentially be affected by this project (i.e., the project would involve at least one impact that is a "Potentially Significant Impact"), as indicated by the checklist on the following pages.

☐ Aesthetics	☐ Agricultural and Forestry	☐ Air Quality	☒ Biological Resources
☒ Cultural Resources	☐ Geology/Soils	☐ Greenhouse Gas Emissions	☐ Hazards and Hazardous Materials
☐ Hydrology/Water Quality	☐ Land Use/Planning	☐ Mineral Resources	☐ Noise
☐ Population/Housing	☐ Public Services	☐ Recreation	☐ Transportation/Traffic
☒ Tribal Cultural Resources	☐ Utilities/Service Systems	☐ Mandatory Findings of Significance	

3.2 Determination

On the basis of this initial evaluation:

- ☐ I find that the proposed project COULD NOT have a significant effect on the environment, and a NEGATIVE DECLARATION will be prepared.
- ☒ I find that although the proposed project could have a significant effect on the environment, there will not be a significant effect in this case because revisions to the project have been made by or agreed to by the project proponent. A MITIGATED NEGATIVE DECLARATION will be prepared.
- ☐ I find that the proposed project MAY have a significant effect on the environment, and an ENVIRONMENTAL IMPACT REPORT is required.
- ☐ I find that the proposed project MAY have an impact on the environment that is "potentially significant" or "potentially significant unless mitigated" but at least one effect (1) has been adequately analyzed in an earlier document pursuant to applicable legal standards and (2) has been addressed by mitigation measures based on the earlier analysis, as described on attached sheets. An ENVIRONMENTAL IMPACT REPORT is required, but it must analyze only the effects that remain to be addressed.
- ☐ I find that although the proposed project could have a significant effect on the environment, because all potentially significant effects (a) have been analyzed adequately in an earlier ENVIRONMENTAL IMPACT REPORT or NEGATIVE DECLARATION pursuant to applicable standards, and (b) have been avoided or mitigated pursuant to that earlier ENVIRONMENTAL IMPACT REPORT or NEGATIVE DECLARATION, including revisions or mitigation measures that are imposed upon the project, nothing further is required.

Signature: [signature] Date: 7.19.22

3.2.1 Aesthetics

I. Aesthetics	Potentially Significant Impact	Less-than-Significant with Mitigation Incorporated	Less-than-Significant Impact	No Impact
Would the project:				
a. Have a substantial adverse effect on a scenic vista?	☐	☐	☐	☒
b. Substantially damage scenic resources, including, but not limited to, trees, rock outcroppings, and historic buildings along a scenic highway?	☐	☐	☐	☒
c. In non-urbanized areas, substantially degrade the existing visual character or quality of public views of the site and its surroundings? (Public views are those that are experienced from publicly accessible vantage point). If the project is in an urbanized area, would the project conflict with applicable zoning and other regulations governing scenic quality?	☐	☐	☒	☐
d. Create a new source of substantial light or glare that would adversely affect daytime or nighttime views in the area?	☐	☐	☒	☐

3.2.1.1 Discussion

a,b. Examples of typical scenic vistas include mountain ranges, ridgelines, or bodies of water as viewed from a highway, public space, or other area designated for the express purpose of viewing and sightseeing. Per the City's General Plan EIR, the City's Panning Area does not contain any scenic vistas or any designated or eligible State scenic highways. Thus, the proposed project would not have a substantial adverse effect on a scenic vista or substantially damage scenic resources, including but not limited to trees, rock outcroppings, and historic buildings within a State scenic highway, and ***no impact*** would occur.

c. The project is located in an urbanized area of the City of Roseville; therefore, in accordance with CEQA question 'c', the relevant threshold is whether the project would conflict with applicable zoning and other regulations governing scenic quality, rather than whether the project would substantially degrade the existing visual character or quality of public views of the site and its surroundings. Nonetheless, photo simulations of the proposed project have been prepared, and are included as Figure 3-1 and Figure 3-2.

Figure 3-1
Views from Strauch Drive Looking Northwest

Figure 3-2
Views from Douglas Boulevard Looking Southeast

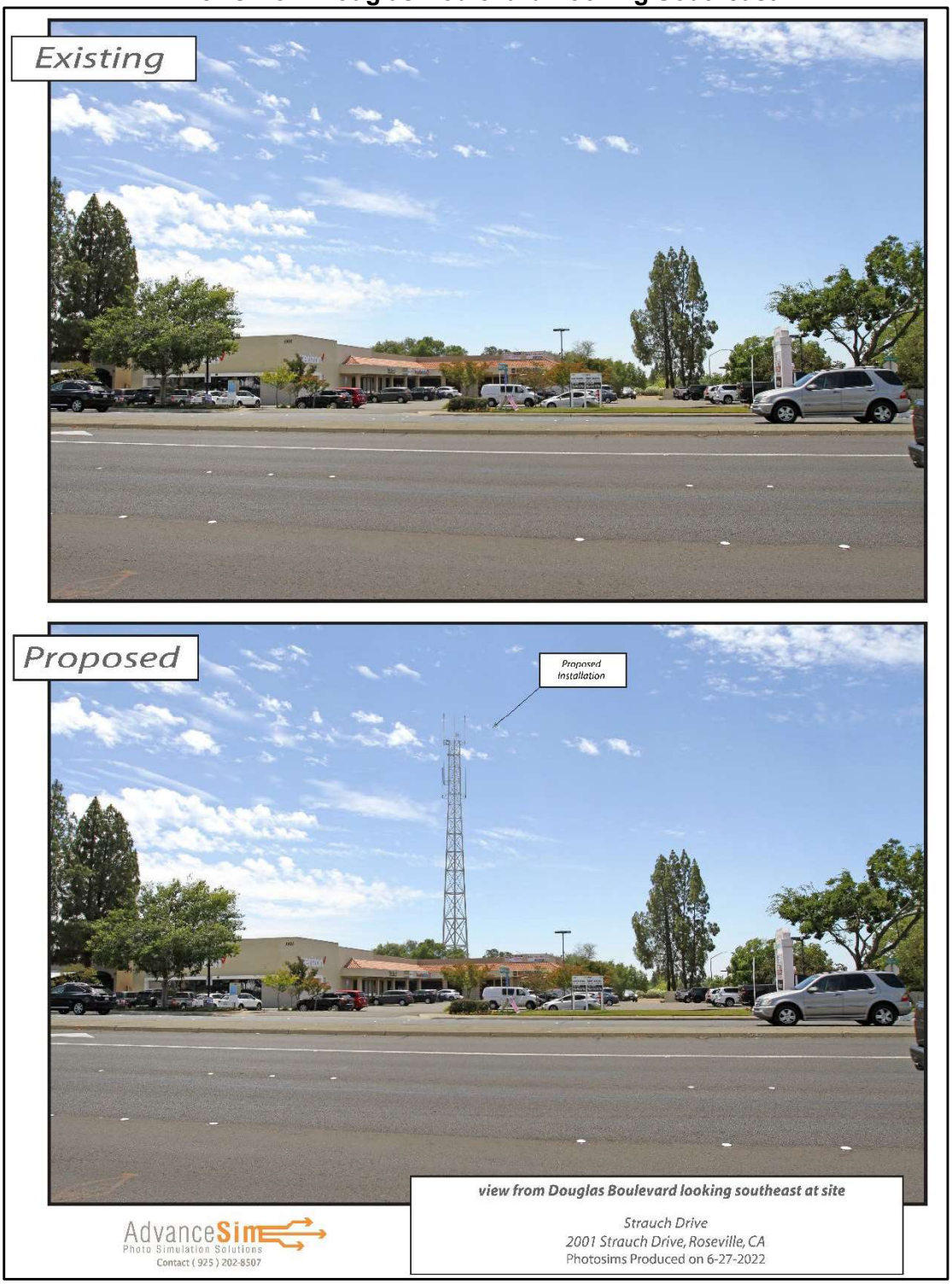

As shown in Figure 3-1 and Figure 3-2, the visual landscape of the surrounding area is characterized by commercial development, with shopping centers to the west, north, and east, and undeveloped land to the south. The proposed radio communications tower would stand approximately 180 feet above ground level. Public views of the top of the tower would be available from Douglas Boulevard from the north, Rocky Ridge Drive from the east, and Strauch Drive from the south. As shown in the photo simulations, the base of the tower and the communications building would be screened from public view by the trees along Strauch Drive, and the commercial buildings to the north and east. Given the urbanized and commercial nature of the area, the proposed project would be generally consistent with the visual character of the project vicinity.

According to Section 19.34.010 of the RMC, the regulations and prohibitions in Chapter 19.34, Antennas and Communications Facilities, are intended to minimize the adverse impacts of such equipment and structures on neighborhoods and surrounding developments by limiting the height, number, and location of such devices. The proposed project's required compliance with such would ensure that substantial adverse impacts related to aesthetics do not occur. For example, all wireless communication facilities would be required to be painted colors which are compatible with their surroundings. In addition, a radio communications tower is an allowed use under the CC land use and PD7 zoning designations. Thus, the proposed project would be consistent with applicable zoning and other regulations governing antennas and communications facilities in the City of Roseville.

Based on the above, implementation of the proposed project would not conflict with the project site's current land use and zoning designations and other regulations governing scenic quality, and a ***less-than-significant*** impact would occur.

d. The existing nighttime lighting environment in the project area is defined by light from Strauch Drive and the surrounding shopping centers, including sources such as streetlights, headlights from vehicles, lighted street signs, and traffic signals. The proposed radio communications tower has the potential to introduce new sources of light in the project vicinity. The communications building would not be occupied, and thus would not be expected to produce light on a regular basis. The only light associated with the tower itself would most likely be affixed to the radio communication tower's highest point. The light source would be located approximately 180 feet in the air, and would be necessary for safety purposes. Thus, the light would not cause a substantial increase in light or glare in the project surroundings.

Based on the above, the proposed radio communications tower, as well as the associated shelter, access roadway, emergency generator, and propane tank, would not substantially alter the existing lighting in the project area. In addition, the tower would comply with all applicable lighting standards established in the RMC. Therefore, the proposed project would result in ***less-than-significant*** impacts related to creating a new source of substantial light or glare which would adversely affect day or nighttime views in the area.

3.2.1.2 Mitigation Measures

The proposed project would not result in any potentially significant impacts related to aesthetic resources. Therefore, mitigation measures are not necessary.

3.2.1.3 References

Vosney, Jack, President for Advancesim Inc. Personal Communication [email] with Rod Stinson, Vice President of Raney Planning & Management, Inc. June 28, 2022.

3.2.2 Agricultural and Forestry Resources

II. Agricultural and Forestry Resources	Potentially Significant Impact	Less-than-Significant with Mitigation Incorporated	Less-than-Significant Impact	No Impact
Would the project:				
a. Convert Prime Farmland, Unique Farmland, or Farmland of Statewide Importance (Farmland), as shown on the maps prepared pursuant to the Farmland Mapping and Monitoring Program of the California Resources Agency, to non-agricultural use?	☐	☐	☐	☒
b. Conflict with existing zoning for agricultural use or conflict with a Williamson Act contract?	☐	☐	☐	☒
c. Conflict with existing zoning for, or cause rezoning of forest land (as defined in Public Resources Code Section 12220(g)), timberland (as defined by Public Resources Code Section 4526), or timberland zoned Timberland Production (as defined by Government Code Section 51104(g))?	☐	☐	☐	☒
d. Result in the loss of forest land or conversion of forest land to non-forest use?	☐	☐	☐	☒
e. Involve other changes in the existing environment that, due to their location or nature, could result in conversion of Farmland to non-agricultural use or conversion of forest land to non-forest use?	☐	☐	☐	☒

3.2.2.1 Discussion

a-e. The project site currently consists of undeveloped ruderal grassland, as well as several trees along the site perimeter, and drainage feature. According to the California Department of Conservation's Farmland Mapping and Monitoring Program, the project site is designated as "Urban and Built-Up Land" and does not contain any Prime Farmland, Unique Farmland, or Farmland of Statewide Importance. Thus, the project site would not be converted from Farmland to non-agricultural uses as a result of the proposed project. The project site is currently designated CC per the City's General Plan and zoned PD7. Consequently, the project site is not zoned for agricultural uses, and the site is not under a Williamson Act Contract. Forest land and timberland do not occur within the City of Roseville. Thus, the project site is not considered forest land (as defined in Public Resources Code section 12220[g]) and is not zoned for Timberland Production (as defined by Government Code Section 51104[g]). Overall, the proposed project would result in ***no impact*** to agricultural and forestry resources.

3.2.2.2 Mitigation Measures

The proposed project would not result in any potentially significant impacts related to agricultural and forestry resources. Therefore, mitigation measures are not necessary.

3.2.2.3 References

California Department of Conservation. 2016. *California Important Farmland Finder.* Available: https://maps.conservation.ca.gov/DLRP/CIFF/. Accessed April 2022.

3.2.3 Air Quality

III. Air Quality	Potentially Significant Impact	Less than Significant with Mitigation Incorporated	Less-than-Significant Impact	No Impact
When available, the significance criteria established by the applicable air quality management or air pollution control district may be relied upon to make the following determinations. Would the project:				
a. Conflict with or obstruct implementation of the applicable air quality plan?	☐	☐	☒	☐
b. Cumulatively considerable net increase of any criteria pollutant for which the project region is a nonattainment area for an applicable federal or state ambient air quality standard?	☐	☐	☒	☐
c. Exposure of sensitive receptors to substantial pollutant concentrations?	☐	☐	☒	☐
d. Other emissions (such as those leading to odors) adversely affecting a substantial number of people?	☐	☐	☒	☐

3.2.3.1 Discussion

a,b. The project site is located within the Sacramento Valley Air Basin (SVAB) and is under the jurisdiction of the Placer County Air Pollution Control District (PCAPCD). The SVAB is designated nonattainment for the federal particulate matter 2.5 microns in diameter ($PM_{2.5}$) and the State particulate matter 10 microns in diameter (PM_{10}) standards, as well as for both the federal and State ozone standards. The federal Clean Air Act requires areas designated as federal nonattainment to prepare an air quality control plan referred to as the State Implementation Plan (SIP). The SIP contains the strategies and control measures for states to use to attain the national ambient air quality standards (NAAQS). The SIP is periodically modified to reflect the latest emissions inventories, planning documents, rules, and regulations of air basins as reported by the agencies with jurisdiction over them. In compliance with regulations, the PCAPCD periodically prepares and updates air quality plans that provide emission reduction strategies to achieve attainment of the NAAQS, including control strategies to reduce air pollutant emissions via regulations, incentive programs, public education, and partnerships with other agencies.

The current applicable air quality plan for the project area is the Sacramento Regional 2009 NAAQS 8-Hour Ozone Attainment and Reasonable Further Progress Plan (Ozone Attainment Plan), updated July 24, 2017. The Ozone Attainment Plan demonstrates how existing and new control strategies would provide the necessary future emission reductions to meet the Clean Air Act (CAA) requirements, including the federal AAQS.

The Ozone Attainment Plan demonstrates how existing and new control strategies would provide the necessary future emission reductions to meet the FCAA requirements, including the NAAQS. It should be noted that in addition to strengthening the 8-hour ozone NAAQS, the U.S. Environmental Protection Agency (USEPA) also strengthened the secondary 8-hour ozone NAAQS, making the secondary standard identical to the primary standard. The SVAB remains classified as a severe nonattainment area for ozone with an attainment deadline of 2027. On October 26, 2015, the USEPA released a final implementation rule for the revised NAAQS for ozone to address the requirements for reasonable further progress, modeling and attainment demonstrations, and reasonably available control measures (RACM) and reasonably available control technology (RACT). On April 30, 2018, the USEPA published designations for areas in attainment/unclassifiable for the 2015 ozone standards. The USEPA identified the portions of Placer County within the SVAB as nonattainment for the 2015 ozone standards. Due to the designation of the SVAB as nonattainment for the 2015 standards, the PCAPCD will work with other regional air districts to prepare a new ozone SIP for the revised 2015 standards.

General conformity requirements of the regional air quality plan include whether a project would cause or contribute to new violations of any AAQS, increase the frequency or severity of an existing violation of any AAQS, or delay timely attainment of any AAQS. In order to evaluate ozone and other criteria air pollutant emissions and support attainment goals for those pollutants that the area is designated nonattainment, the PCAPCD has adopted recommended thresholds of significance for emissions of PM_{10} and the ozone precursors reactive organic gases (ROG) and oxides of nitrogen (NO_X). On October 13, 2016, the PCAPCD adopted updated significance thresholds for the aforementioned pollutants.

The significance thresholds, expressed in pounds per day (lbs/day), listed in Table 3.2.3-1 are the PCAPCD's current thresholds of significance for use in the evaluation of air quality impacts associated with proposed development projects. Thus, if the proposed project's emissions exceed the pollutant thresholds presented in Table 3.2.3-1, the project could have a significant effect on air quality, the attainment of federal and State AAQS, and could conflict with or obstruct implementation of the applicable air quality plan.

Table 3.2.3-1. PCAPCD Thresholds of Significance

Pollutant	Construction Threshold (lbs/day)	Operational Threshold (lbs/day)
ROG	82	55
NO_X	82	55
PM_{10}	82	82

Source: Placer County Air Pollution Control District. CEQA Handbook. 2017.

Construction activity associated with the proposed project would be limited to relatively minor ground disturbance to construct the proposed tower foundation, minor utility improvements, and installation of the proposed radio communications tower, as well as the associated shelter, access roadway, emergency generator, and propane tank. Given that such activities would result in relatively minor emissions of criteria pollutants, the proposed project is anticipated to be below the PCAPCD thresholds for construction

emissions. The only emissions that could occur during project operations would be associated with maintenance testing of the emergency generator, and vehicle trips associated with site maintenance and refilling of the on-site propane tank. The emergency generator would only operate for intermittent testing and during emergency situations. Thus, the proposed project would not result in substantial operational emissions.

Past, present, and future development projects contribute to the region's adverse air quality impacts on a cumulative basis. By nature, air pollution is largely a cumulative impact. A single project is not sufficient in size to, by itself, result in nonattainment of AAQS. Because the proposed project would not result in emissions above the applicable thresholds of significance for ROG, NO_X, or PM_{10}, the project would not result in a cumulatively considerable net increase of any criteria pollutant for which the project region is nonattainment under an applicable federal or State AAQS.

Because the proposed project would not result in construction-related or operational emissions of criteria air pollutants in excess of PCAPCD's thresholds of significance, conflicts with or obstruction of the implementation of the applicable regional air quality plans would not occur. In addition, the project would not result in a cumulatively considerable net increase of any criteria pollutant for which the project region is nonattainment under an applicable federal or State AAQS. Thus, a ***less-than-significant*** impact would result.

c. Some land uses are considered more sensitive to air pollution than others, due to the types of population groups or activities involved. Heightened sensitivity may be caused by health problems, proximity to the emissions source, and/or duration of exposure to air pollutants. Children, pregnant women, the elderly, and those with existing health problems are especially vulnerable to the effects of air pollution. Sensitive receptors are typically defined as facilities where sensitive receptor population groups (i.e., children, the elderly, the acutely ill, and the chronically ill) are likely to be located. Accordingly, land uses that are typically considered to be sensitive receptors include residences, schools, playgrounds, childcare centers, retirement homes, convalescent homes, hospitals, and medical clinics. The nearest existing sensitive receptors would be the single-family residences approximately 400 feet west of the project site.

The major pollutant concentrations of concern are localized carbon monoxide (CO) emissions and toxic air contaminant (TAC) emissions.

Localized Carbon Monoxide Emissions

As discussed in Section 3.2.17, Transportation, of this IS/MND, the proposed project is not anticipated to increase traffic to local roadways except during the construction period. Increases in vehicle traffic resulting from the proposed project would be minor and would only occur during the installation of the proposed radio communications tower, as well as the associated shelter, access roadway, emergency generator, and propane tank. As such, based on the PCAPCD screening criteria, the proposed project would result in a less-than-significant impact related to localized CO emissions concentrations and would not expose sensitive receptors to substantial concentrations of localized CO.

TAC Emissions

Another category of environmental concern is TACs. The CARB's *Air Quality and Land Use Handbook: A Community Health Perspective* (Handbook) provides recommended setback distances for sensitive land uses from major sources of TACs, including, but not limited to, freeways and high traffic roads, distribution centers, and rail yards. The CARB has identified diesel particulate matter (DPM) from diesel-fueled engines as a TAC; thus, high volume freeways, stationary diesel engines, and facilities attracting heavy and constant diesel vehicle traffic are identified as having the highest associated health risks from DPM. Health risks associated with TACs are a function of both the concentration of emissions and the duration of exposure, where the higher the concentration and/or the longer the period of time that a sensitive receptor is exposed to pollutant concentrations would correlate to a higher health risk.

The proposed project does not include any operations that would be considered a substantial source of TACs. As noted previously, an emergency generator would exist on-site. Diesel-powered generators are known to emit DPM during operations. However, the emergency generator would be fueled by propane, and would only operate during occasional testing and emergency situations when grid power is not available. Accordingly, operations of the proposed project would not expose sensitive receptors to excess concentrations of TACs.

Short-term, construction-related activities could result in the generation of TACs, specifically DPM, from on-road haul trucks and off-road equipment exhaust emissions. Construction is temporary and occurs over a relatively short duration in comparison to the operational lifetime of the proposed project. Health risks are typically associated with exposure to high concentrations of TACs over extended periods of time (e.g., 30 years or greater), whereas the construction period associated with the proposed project would occur over a substantially shorter period of time. All construction equipment and operation thereof would be regulated per the *In-Use Off-Road Diesel Vehicle Regulation*, which is intended to help reduce emissions associated with off-road diesel vehicles and equipment, including DPM. Project construction would also be required to comply with all applicable PCAPCD rules and regulations, particularly associated with permitting of air pollutant sources.

Due to the temporary nature of construction, and the relatively short duration of potential exposure to associated emissions, the potential for any one sensitive receptor in the area to be exposed to concentrations of pollutants for a substantially extended period of time would be low. Therefore, construction of the proposed project would not be expected to expose nearby sensitive receptors to substantial pollutant concentrations.

Conclusion

Based on the above, the proposed project would not expose any sensitive receptors to substantial concentrations of pollutants, including localized CO or TACs, during construction or operation. Therefore, the proposed project would result in a ***less-than-significant*** impact related to the exposure of sensitive receptors to substantial pollutant concentrations.

D. Emissions of pollutants have the potential to adversely affect sensitive receptors within the project area. Pollutants of principal concern include emissions leading to odors, emissions of dust, or emissions considered to constitute air pollutants. Air pollutants have been discussed in sections “a” through “c” above. Therefore, the following discussion focuses on emissions of odors and dust during construction and operation of the project.

Odors

Odors are generally regarded as an annoyance rather than a health hazard. Due to the subjective nature of odor impacts, the number of variables that can influence the potential for an odor impact, and the variety of odor sources, quantitative methodologies to determine the presence of a significant odor impact do not exist. Certain land uses such as wastewater treatment facilities, landfills, confined animal facilities, composting operations, food manufacturing plants, refineries, and chemical plants have the potential to generate considerable odors.

Diesel fumes from construction equipment and heavy-duty trucks could be found to be objectionable; however, as addressed above, operation of construction equipment would be regulated by PCAPCD rules and regulations, restricted to certain hours per the RMC, and would occur intermittently throughout the course of a day. All construction equipment and operation thereof would be regulated per the statewide *In-Use Off-Road Diesel Vehicle Regulation*. In addition, construction is temporary, and construction equipment would operate intermittently throughout the course of a day and would likely only occur over portions of the improvement area at a time. For the aforementioned reasons, and due to the distance between the project site and the nearest sensitive receptors, the project would not result in any noticeable objectionable odors associated with construction.

Although offensive odors rarely cause any physical harm, they can be unpleasant, leading to citizen complaints to local governments and air districts. Diesel-powered equipment operating during construction may generate odors that are evident in the immediately surrounding area. Such activities would be intermittent and temporary in duration and, therefore, would not result in nuisance odors. Radio communications towers are not known to emit odors during operation, and the project does not meet any of the facility types identified by CARB or PCAPCD as odor-generating; thus, the project would not generate substantial operational odors. Accordingly, the proposed project would not create objectionable odors affecting a substantial number of people.

Dust

As noted previously, construction of projects within Placer County are required to comply with all applicable PCAPCD rules and regulations. The aforementioned rules would act to reduce construction-related dust by implementing dust control measures. PCAPCD Rule 228 requires implementation of dust control measures, such as minimizing track-out on to paved public roadways, limiting vehicle travel on unpaved surfaces to 15 miles per hour, and stabilization of storage piles and disturbed areas. Following construction, operation of the proposed radio communications tower would not involve vehicles regularly operating within the project site. Furthermore, the access road is anticipated to be paved and,

therefore, maintenance vehicles visiting the site would not generate substantial dust. Thus, the proposed project operations would not include sources of dust that could adversely affect a substantial number of people.

Conclusion

For the aforementioned reasons, construction and operation of the proposed project would not create objectionable odors affecting a substantial number of people, and impacts would be ***less than significant***.

3.2.3.2 Mitigation Measures

Due to the short duration of construction, and minimal ground disturbance, the proposed project would not result in any potentially significant impacts on air quality. Therefore, mitigation measures are not necessary.

3.2.3.3 References

California Air Resources Board. *Air Quality and Land Use Handbook: A Community Health Perspective*. April 2005.

California Air Resources Board. 2020. *Area Designations Maps*. Available at: <http://www.arb.ca.gov/desig/adm/adm.htm>. Accessed October 2021.

Placer County Air Pollution Control District. 2017 *CEQA Handbook*. November 2017.

3.2.4 Biological Resources

IV. Biological Resources	Potentially Significant Impact	Less-than-Significant with Mitigation Incorporated	Less-than-Significant Impact	No Impact
Would the project:				
a. Have a substantial adverse effect, either directly or through habitat modifications, on any species identified as a candidate, sensitive, or special-status species in local or regional plans, policies, or regulations, or by the California Department of Fish and Wildlife or U.S. Fish and Wildlife Service?	☐	☒	☐	☐
b. Have a substantial adverse effect on any riparian habitat or other sensitive natural community identified in local or regional plans, policies, or regulations, or by the California Department of Fish and Wildlife or U.S. Fish and Wildlife Service?	☐	☐	☒	☐
c. Have a substantial adverse effect on state or federally protected wetlands (including, but not limited to, marsh, vernal pool, coastal, etc.) through direct removal, filling, hydrological interruption, or other means?	☐	☐	☒	☐
d. Interfere substantially with the movement of any native resident or migratory fish or wildlife species or with established native resident or migratory wildlife corridors, or impede the use of native wildlife nursery sites?	☐	☐	☒	☐
e. Conflict with any local policies or ordinances protecting biological resources, such as a tree preservation policy or ordinance (including essential fish habitat)?	☐	☐	☒	☐
f. Conflict with the provisions of an adopted habitat conservation plan, natural community conservation plan, or other approved local, regional, or state habitat conservation plan?	☐	☐	☒	☐

3.2.4.1 Discussion

a. The project site currently consists of ruderal grasses and several trees. A search of the Department of Fish and Wildlife California Natural Diversity Database (CNDDB) was conducted for the project area to identify the presence of special-status species. According to the CNDDB search, a total of 17 special-status wildlife species are known to occur in the project area.

As noted previously, the project site is regularly disced for vegetation maintenance. The regular disturbance associated with discing eliminates the possibility that special-status plant species would occur on the project site. Therefore, implementation of the proposed project would not adversely affect special-status plant species.

Of the 17 special-status wildlife species that are known to occur in the project area, four have the potential to occur on the project site based on the habitat available on-site. Because the proposed project could involve the removal of trees, special-status bird species that nest in trees would have the potential to be impacted during construction. The nesting bird species with the potential to occur on the project site are the Swainson's hawk, grasshopper sparrow, golden eagle, and white-tailed kite. As such, a potentially significant impact could occur to nesting bird species. However, implementation of Mitigation Measure BIO-1 would reduce such impacts to a less-than-significant level.

Based on the above, with implementation of Mitigation Measure BIO-1, the proposed project would not cause a substantial adverse effect to any special-status species; thus, the impact would be considered ***less than significant with mitigation incorporated.***

b,c,d,f. A drainage feature exists in the western portion of the project site. The drainage is intermittent and seasonal, and does not qualify as wetland or as supporting riparian habitat. Furthermore, implementation of the project would occur on the eastern portion of the project site and, thus, the project would not affect the on-site drainage. In addition, the project site does not support any wildlife movement corridors, and is located in a highly urbanized area. The project site and the surrounding areas do not contain waterways that could be used by migratory fish or as a wildlife corridor for other wildlife species. The project would not conflict with the City's *Open Space Preserve Overarching Management Plan,* or would otherwise impact habitat areas subject to regulatory oversight.

Based on the above, the proposed project would not cause a substantial adverse effect to protected riparian habitats or wetlands, would not interfere with the movement of fish or wildlife species, and would not conflict with any conservation plan; thus, a ***less-than-significant*** impact would occur.

e. Several trees exist on the project site. Buildout of the proposed project has the potential to involve the removal of one or more of the trees. However, through compliance with Section 19.66.030 of the RMC (Tree Preservation Ordinance), which delineates the permits required for the removal of trees, and required replacement either via tree planting or contribution to the City's Tree Mitigation Fund, the proposed project would not conflict with any local policies or ordinances protecting biological resources.

Given compliance with the applicable local regulations regarding tree removal, the project would result in a ***less-than-significant*** impact related to conflict with local tree preservation policies.

3.2.4.2 Mitigation Measures

Mitigation Measure BIO-1: Implement Measures to Protect Protected Bird Species

If tree removal or other ground-disturbing activities are to begin during the breeding/nesting season for raptors or other protected bird species in the region (generally February 1 through August 31), a qualified biologist shall be retained by the City to conduct pre-construction surveys in areas of suitable nesting habitat within two weeks prior to initiation of tree removal or ground disturbance. The pre-construction surveys shall be submitted to the City's Planning Division. If active nests are not found, further mitigation is not required. If active nests are found, the construction contractor shall avoid impacts on such nests by establishing a no-disturbance buffer around the nest. The appropriate buffer size for all nesting birds shall be determined by a qualified biologist. Buffer size will vary depending on site-specific conditions, the species of nesting bird, nature of the project activity, the extent of existing disturbance in the area, visibility of the disturbance from the nest site, and other relevant circumstances. Construction activity shall not occur within the buffer area of an active nest and nests shall be monitored by a qualified biologist until a qualified biologist confirms that the chicks have fledged and are no longer dependent on the nest, or the nesting cycle has otherwise completed. Monitoring of the nest by a qualified biologist during construction activities shall be required if the activity has the potential to adversely affect the nest.

3.2.4.3 References

California Department of Fish and Wildlife. *CNDDB Rarefind 5.* Available at: https://wildlife.ca.gov/Data/CNDDB/Maps-and-Data. Accessed April 2022.

Placer County. *Placer County Conservation Program.* Available at: https://www.placer.ca.gov/3362/Placer-County-Conservation-Program. Accessed April 2022.

3.2.5 Cultural Resources

V. Cultural Resources	Potentially Significant Impact	Less-than-Significant with Mitigation Incorporated	Less-than-Significant Impact	No Impact
Would the project:				
a. Cause a substantial adverse change in the significance of a historical resource pursuant to Section 15064.5?	☐	☒	☐	☐
b. Cause a substantial adverse change in the significance of an archaeological resource pursuant to Section 15064.5?	☐	☒	☐	☐
c. Disturb any human remains, including those interred outside of dedicated cemeteries?	☐	☒	☐	☐

3.2.5.1 Discussion

a-c. Historical resources are features that are associated with the lives of historically important persons and/or historically significant events, that embody the distinctive characteristics of a type, period, region or method of construction, or that have yielded, or may be likely to yield, information important to the pre-history or history of the local area, California, or the nation. Examples of typical historical resources include, but are not limited to, buildings, farmsteads, rail lines, bridges, and trash scatters containing objects such as colored glass and ceramics.

The proposed project would involve the installation of a radio communications tower, as well as the associated shelter, access roadway, emergency generator, and propane tank. Ground disturbing activities associated with implementation of the proposed project would be limited to construction of the foundations of the tower and associated building, assembly of the tower and shelter, as well as construction of an access roadway. Given that the project site is located in an urbanized area, the discovery of previously-unknown historical resources during the limited ground disturbance associated with the proposed project is not anticipated.

A records search for the project site and the surrounding 0.25-mile radius was conducted by staff at the North Central Information Center of the California Historical Resources Information System on April 7, 2022. The records search indicated that seven previous cultural resources studies have been conducted within the search area. The records search did not identify any recorded cultural resources on the project site or within the 0.25-mile radius.

Furthermore, the Native American Heritage Commission (NAHC) was contacted on April 6, 2022, to request a search of its Sacred Lands File and a list of interested Native American tribes and individuals. The results of the NAHC's Sacred Lands File search did not indicate the presence of any known cultural resources on the project site. Assembly

Bill (AB 52) tribal consultation efforts under CEQA were carried out by the City of Roseville and additional information is provided in Section 3.2.18, Tribal Cultural Resources, of this Environmental Checklist.

Due to previous disturbance of the site associated with regular discing of on-site vegetation, and the limited extent of ground disturbance associated with the proposed project, the likelihood of discovering previously unknown historical or archaeological resources and/or human remains is low. However, the possibility exists that ground-disturbing activities during construction may uncover previously unknown subsurface cultural resources; such disturbance would be a potentially significant impact. Mitigation Measures CUL-1 and CUL-2 would reduce this impact to a less-than-significant level.

Based on the above, with implementation of Mitigation Measures CUL-1 and CUL-2, the proposed project would not cause a substantial adverse change in the significance of a historical or archaeological resource pursuant to Section 15064.5, and would not result in the disturbance of human remains; thus, the impact would be considered ***less than significant with mitigation incorporated.***

3.2.5.2 Mitigation Measures

Mitigation Measure CUL-1: Implement Measures to Protect Previously Unidentified Cultural Resources

The City shall ensure that construction specifications include the following information in the grading notes:

- *Construction shall stop if potential cultural resources are encountered. It is possible that previous activities have obscured surface evidence of cultural resources. If signs of an archeological site, such as any unusual amounts of stone, bone, or shell, are uncovered during grading or other construction activities, work shall be halted within 100 feet of the find and the City of Roseville will be notified. A qualified archeologist shall be consulted for an onsite evaluation. If the site appears to be eligible for listing in State or federal registers, additional mitigation, such as further testing for evaluation or data recovery, may be necessary.*
- *In the event resources are discovered, the City shall retain a qualified archaeologist to assess the find and to determine whether the resource requires further study. Any previously undiscovered resources found during construction shall be recorded on appropriate California Department of Parks and Recreation 523 forms and evaluated for significance under all applicable regulatory criteria.*
- *All work shall stop in the immediate vicinity of the find, and, if the find is determined to be an important cultural resource, the City shall make available contingency funding and a time allotment sufficient to allow recovery of an archaeological sample or to implement an avoidance measure. Construction work may continue on other parts of the project while archaeological mitigation takes place.*

Mitigation Measure CUL-2: Implement Measures if Construction Activities Inadvertently Discover or Disturb Human Remains

The City shall ensure that construction specifications include the following in the grading notes:

- *If human remains are discovered during any phase of construction, including disarticulated or cremated remains, the construction contractor shall immediately cease all ground-disturbing activities within 100 feet of the remains and notify the City of Roseville.*
- *In accordance with California State Health and Safety Code Section 7050.5, no further disturbance shall occur until the following steps have been completed:*
    - *The County Coroner has made the necessary findings as to origin and disposition pursuant to Public Resources Code Section 5097.98.*
    - *If the remains are determined by the County Coroner to be Native American, NAHC will be notified within 24 hours, and the treatment and disposition of the remains will comply with NAHC guidelines.*
- *It is further recommended that a professional archaeologist with Native American burial experience conduct a field investigation of the specific site and consult with the Most Likely Descendant (MLD), if any, identified by NAHC. As necessary and appropriate, a professional archaeologist may provide technical assistance to the MLD, including excavation and removal of the human remains.*

3.2.5.3 References

Native American Heritage Commission. *Strauch Drive Radio Communications Tower Project, Placer County*. April 19, 2022.

North Central Information Center. *Records Search Results for Strauch Drive Radio Communications Tower Project; NCIC File No.: PLA-22-35*. April 7, 2022.

3.2.6 Energy

VI. Energy	Potentially Significant Impact	Less than Significant with Mitigation Incorporated	Less-than-Significant Impact	No Impact
Would the project:				
a. Result in potentially significant environmental impact due to wasteful, inefficient, or unnecessary consumption of energy resources, during project construction or operation?	☐	☐	☒	☐
b. Conflict with or obstruct a state or local plan for renewable energy or energy efficiency?	☐	☐	☒	☐

3.2.6.1 Discussion

a,b. The main forms of available energy supply are electricity, natural gas, and oil. A description of the 2019 California Green Building Standards Code and the Building Energy Efficiency Standards, with which the proposed project would be required to comply, as well as discussions regarding the proposed project's potential effects related to energy demand during construction and operations are provided below.

The 2019 California Building Standards Code (CBSC), otherwise known as the CAL Green Code (California Code of Regulations [CCR] Title 24, Part 11), became effective on January 1, 2020. The purpose of the CAL Green Code is to improve public health, safety, and general welfare by enhancing the design and construction of buildings through the use of building concepts having a reduced negative impact or positive environmental impact and encouraging sustainable construction practices. The CBSC standards regulate the method of use, properties, performance, types of materials used in construction, alteration repair, improvement and rehabilitation of a structure or improvement to property.

Construction

Construction of the proposed project would involve on-site energy demand and consumption related to the use of oil in the form of gasoline and diesel fuel for construction worker vehicle trips, and hauling and material delivery truck trips. In addition, diesel-fueled portable generators may be necessary to provide additional electricity demands for temporary on-site lighting, welding, and for supplying energy to areas of the site where energy supply cannot be met via a hookup to the existing electricity grid. Project construction would not involve the use of natural gas appliances or equipment.

Compliance with local, State, and federal regulations, which limit engine idling times and require recycling construction debris, would reduce short-term energy demand during the project's construction to the extent feasible and project construction would not result in a wasteful or inefficient use of energy.

The CARB has prepared the *2017 Climate Change Scoping Plan Update* (2017 Scoping Plan), which builds upon previous efforts to reduce GHG emissions and is designed to continue to shift the California economy away from dependence on fossil fuels. Appendix B of the 2017 Scoping Plan includes examples of local actions (municipal code changes, zoning changes, policy directions, and mitigation measures) that would support the State's climate goals. The examples provided include, but are not limited to, enforcing idling time restrictions for construction vehicles, utilizing existing grid power for electric energy rather than operating temporary gasoline/diesel-powered generators, and increasing use of electric and renewable fuel-powered construction equipment.

Based on the above, the temporary increase in energy use occurring during construction of the proposed project would not result in a significant increase in peak or base demands or require additional capacity from local or regional energy supplies.

Operational

State and local authorities regulate energy use and consumption through various means and programs. Regulations at the State level are intended to reduce energy use and greenhouse gas (GHG) emissions. The proposed project would comply with these regulations that include, among others, AB 1493–Light-duty Vehicle Standards, CCR Title 24, Part 6–Energy Efficiency Standards, and CCR Title 24.

Following implementation of the proposed project, Roseville Electric Utility would provide electricity to the project site. Apart from electricity consumed as part of the daily operation of the proposed radio communications tower, the only other energy required by the project would be for the propane-fueled backup generator, which would run only in emergency situations and/or during brief maintenance tests occurring periodically. Operations of a backup generator in emergency situations would not be considered unnecessary and/or wasteful.

Electricity supplied to the project by Roseville Electric Utility would comply with the State's Renewable Portfolio Standard (RPS), which requires investor-owned utilities, electric service providers, and community choice aggregators to increase procurement from eligible renewable energy resources to 60 percent by 2030. Thus, a portion of the energy consumed during project operations would originate from renewable sources.

Conclusion

Based on the above, construction and operation of the proposed project would not result in wasteful, inefficient, or unnecessary consumption of energy resources or conflict with or obstruct a State or local plan for renewable energy or energy efficiency. Thus, a ***less-than-significant*** impact would occur.

3.2.6.2 Mitigation Measures

The proposed project would not result in any potentially significant impacts related to energy; therefore, mitigation measures would not be required.

3.2.6.3 References

California Air Resources Board. *2017 Climate Change Scoping Plan Update*. January 20, 2017.

California Building Standards Commission. *California Green Building Standards Code*. 2019.

3.2.7 Geology and Soils

VII. Geology and Soils	Potentially Significant Impact	Less-than-Significant with Mitigation Incorporated	Less-than-Significant Impact	No Impact
Would the project:				
a. Directly or indirectly cause potential substantial adverse effects, including the risk of loss, injury, or death involving:				
Rupture of a known earthquake fault, as delineated on the most recent Alquist-Priolo Earthquake Fault Zoning Map issued by the State Geologist for the area or based on other substantial evidence of a known fault? Refer to Division of Mines and Geology Special Publication 42.	☐	☐	☒	☐
Strong seismic ground shaking?	☐	☐	☒	☐
Seismic-related ground failure, including liquefaction?	☐	☐	☒	☐
Landslides?	☐	☐	☒	☐
b. Result in substantial soil erosion or the loss of topsoil?	☐	☐	☒	☐
c. Be located on a geologic unit or soil that is unstable or that would become unstable as a result of the project and potentially result in an onsite or offsite landslide, lateral spreading, subsidence, liquefaction, or collapse?	☐	☐	☒	☐
d. Be located on expansive soil, as defined in Table 18-1-B of the Uniform Building Code (1994), creating substantial direct or indirect risks to life or property?	☐	☐	☒	☐
e. Have soils incapable of adequately supporting the use of septic tanks or alternative wastewater disposal systems in areas where sewers are not available for the disposal of wastewater?	☐	☐	☐	☒
f. Directly or indirectly destroy a unique paleontological resource or site or unique geologic feature?	☐	☐	☒	☐

3.2.7.1 Discussion

a-d. Per the City of Roseville 2035 General Plan Update EIR, the City is located in an area with relatively low seismic activity, and fault traces are not located either within or immediately adjacent to the City's Planning Area. The project site is not located within a State-

designated Alquist-Priolo Fault Zone. The nearest active faults are the Cordelia Fault and Green Valley Fault, located approximately 60 miles southwest of the project site, and the Hunting Creek Fault, located approximately 60 miles west of the project site. Thus, the potential for fault rupture risk at the project site is low.

An earthquake of moderate to high magnitude generated by the above faults could cause considerable ground shaking at the project site. However, the proposed project would be properly engineered in accordance with the CBSC, which includes engineering standards appropriate for the seismic area in which the project site is located. Proper engineering of the proposed project would ensure that the project would not be subject to substantial risks related to seismic ground shaking.

According to the U.S. Department of Agriculture Natural Resource Conservation Service's Web Soil Survey, soils at the project site have been identified as 96.7 percent Cometa-Fiddyment complex, and 3.3 percent Inks-Exchequer complex. The on-site soils have a low shrink-swell potential, and were not determined to have low strength. Thus, the aforementioned soil features do not represent a significant limitation related to the excavation required to construct the foundation for the proposed radio communication tower. Nonetheless, prior to development of the proposed project, a project-specific geotechnical report would be prepared in order to ensure that all geological hazards are adequately addressed. Thus, the aforementioned soil features do not represent a significant limitation on the shallow excavation required to construct the foundation for the proposed project.

Liquefaction is a phenomenon in which granular material is transformed from a solid state to a liquefied state as a consequence of increased pore-water pressure and reduced effective stress. Per the Web Soil Survey, Cometa-Fiddyment complex and Inks-Exchequer complex are considered well-draining soils and, thus, liquefaction is not anticipated to occur on the project site. Seismically-induced landslides are triggered by earthquake ground shaking. Lateral spreading and subsidence are also geological hazards of concern; however, the project site is generally flat and not located near an active fault zone or soils subject to such hazards, and, thus, implementation of the proposed project on the project site would not induce risks associated with liquefaction, landslide, lateral spreading, or subsidence.

Based on the above, the proposed project would not be subject to substantial risks related to liquefaction, landslides, lateral spreading, and subsidence/settlement. Compliance with standard construction regulations included in the CBSC would ensure that the proposed project would not directly or indirectly cause potential substantial adverse effects, including the risk of loss, injury, or death involving liquefaction, subsidence, or settlement, and would not be located on a geologic unit or soil that is unstable, or that would become unstable as a result of the project, and potentially result in on- or off-site subsidence, liquefaction, or collapse. Thus, a ***less-than-significant*** impact would occur.

e. The construction or operation of septic tanks or other alternative wastewater disposal systems is not included as part of the project. Therefore, ***no impact*** regarding the capability of soil to adequately support the use of septic tanks or alternative wastewater disposal systems would occur.

f. As previously discussed, the project site is located in an urbanized and highly disturbed area, and the proposed project would not result in substantial ground disturbing activities. In addition, the City of Roseville General Plan EIR evaluated buildout of the entire General Plan, and found that impacts related to paleontological resources and unique geological resources would be less-than-significant with the implementation of mitigation. Thus, additional implementation of Mitigation Measure CUL-1 and CUL-2 would ensure that significant impacts do not occur. Therefore, the project would not result in directly or indirectly destroying paleontological resources and a ***less-than-significant*** impact would occur.

3.2.7.2 Mitigation Measures

The proposed project would not result in any potentially significant impacts related to geology and soils; therefore, mitigation measures would not be required.

3.2.7.3 References

California Geological Survey. 2019. *EQ Zapp: California Earthquake Hazards Zone Application*. Available: https://maps.conservation.ca.gov/cgs/EQZApp/app/. Accessed April 2022.

City of Roseville. *2035 General Plan Update Final EIR.* August 5, 2020.

U.S. Department of Agriculture Natural Resource Conservation Service. *Web Soil Survey.* Available at: https://websoilsurvey.nrcs.usda.gov/app/WebSoilSurvey.aspx. Accessed April 2022.

3.2.8 Greenhouse Gas Emissions

VIII. Greenhouse Gas Emissions	Potentially Significant Impact	Less than Significant with Mitigation Incorporated	Less-than-Significant Impact	No Impact
Would the project:				
a. Generate greenhouse gas emissions, either directly or indirectly, that may have a significant impact on the environment?	☐	☐	☒	☐
b. Conflict with an applicable plan, policy, or regulation adopted for the purpose of reducing the emissions of greenhouse gases?	☐	☐	☒	☐

3.2.8.1 Discussion

a,b. Emissions of GHGs contributing to global climate change are attributable in large part to human activities associated with the industrial/manufacturing, utility, transportation, residential, and agricultural sectors. Therefore, the cumulative global emissions of GHGs contributing to global climate change can be attributed to every nation, region, and city, and virtually every individual on Earth. An individual project's GHG emissions are at a micro-scale level relative to global emissions and effects to global climate change; however, an individual project could result in a cumulatively considerable incremental contribution to a significant cumulative macro-scale impact. As such, impacts related to emissions of GHG are inherently considered cumulative impacts.

Implementation of the proposed project would cumulatively contribute to increases of GHG emissions. Estimated GHG emissions attributable to future development would be primarily associated with increases of carbon dioxide (CO_2) and, to a lesser extent, other GHG pollutants, such as methane (CH_4) and nitrous oxide (N_2O) associated with area sources, mobile sources or vehicles, and utilities (electricity and natural gas). The primary source of GHG emissions for the project would be mobile source emissions during construction. The common unit of measurement for GHG is expressed in terms of annual metric tons of CO_2 equivalents ($MTCO_2e/yr$).

As discussed in Section 3.2.3, *Air Quality*, the PCAPCD has the primary responsibility for air quality management in Placer County. PCAPCD has adopted a *de minimis* threshold of 1,100 $MTCO_2e$/yr for operation of land use development projects, such as new residential and commercial projects. The PCAPCD also has a bright line threshold of 10,000 $MTCO_2e$, where land use development projects in excess of the *de minimis* threshold (1,100 $MTCO_2e$) can be found less than cumulatively considerable if the emission intensity (emissions per capita) meets certain criteria.

It should be noted that construction GHG emissions are a one-time release and are, therefore, not typically expected to generate a significant contribution to global climate change. Construction activities associated with implementation of the proposed project would include constructing a foundation, assembly of the proposed radio communications

tower and associated shelter, and installation of the access roadway, emergency generator, and propane tank. Because the use of heavy equipment would be limited and the overall construction period would be short in comparison to other development projects in the City, the emissions of construction-related GHG would be less than significant.

During operations, the only GHG emissions associated with the proposed project would be emissions associated with electricity generation necessary to power the proposed radio communications tower, as well as use of the propane-powered emergency backup generator. The electricity generated by Roseville Electric Utility would comply with the State RPS and, thus, would be carbon neutral by the year 2045. In addition, the proposed radio communications tower would not result in a change to regional vehicle miles travelled (VMT). Consequently, operation and maintenance of the proposed project would not result in significant emissions of GHGs.

Based on the above, the proposed project would not be considered to generate GHG emissions, either directly or indirectly, that may have a significant impact on the environment, or conflict with any applicable plan, policy, or regulation adopted for the purpose of reducing the emissions of GHGs. Thus, a ***less-than-significant*** impact would occur.

3.2.8.2 Mitigation Measures

The proposed project would not result in significant impacts related to GHG emissions; therefore, mitigation measures would not be required.

3.2.8.3 References

Placer County Air Pollution Control District. *2017 CEQA Handbook*. November 2017.

3.2.9 Hazards and Hazardous Materials

IX. Hazards and Hazardous Materials	Potentially Significant Impact	Less-than-Significant with Mitigation Incorporated	Less-than-Significant Impact	No Impact
Would the project:				
a. Create a significant hazard to the public or the environment through the routine transport, use, or disposal of hazardous materials?	☐	☐	☒	☐
b. Create a significant hazard to the public or the environment through reasonably foreseeable upset and accident conditions involving the release of hazardous materials into the environment?	☐	☐	☒	☐
c. Emit hazardous emissions or handle hazardous or acutely hazardous materials, substances, or waste within one-quarter mile of an existing or proposed school?	☐	☐	☐	☒
d. Be located on a site that is included on a list of hazardous materials sites compiled pursuant to Government Code Section 65962.5 and, as a result, would it create a significant hazard to the public or the environment?	☐	☐	☐	☒
e. For a project located within an airport land use plan area or, where such a plan has not been adopted, be within two miles of a public airport or public use airport, and result in a safety hazard or excessive noise for people residing or working in the project area?	☐	☐	☐	☒
f. Impair implementation of or physically interfere with an adopted emergency response plan or emergency evacuation plan?	☐	☐	☒	☐
g. Expose people or structures, either directly or indirectly, to a significant risk of loss, injury, or death involving wildland fires?	☐	☐	☒	☐

3.2.9.1 Discussion

a,b. During both construction and operations, the proposed radio communications tower, associated shelter, access roadway, emergency generator, and propane tank would not require the routine transport, use, disposal, or generation of substantial amounts of hazardous materials and chemicals that would represent a substantial risk to public health

or the environment. A 500-gallon propane tank would be present on the project site. According to the HUD Exchange Acceptable Separation Distance Assessment Tool, which is a standardized tool that can be used for evaluating impacts associated with aboveground storage tanks, the acceptable separation distance (ASD) of the propane tank for thermal radiation for people is approximately 207 feet, and the ASD for thermal radiation for buildings is approximately 36 feet. Because the nearest building is approximately 100 feet away from the project site, and the nearest single-family residences are approximately 400 feet from the project site, adverse impacts associated with the proposed propane tank would not occur. In addition, given compliance with CCR Section 4650, Storage, Handling, and Use of Cylinders, which delineates the appropriate storage of propane gas, the propane tank would not result in a significant environmental impact.

Construction activities associated with the proposed project would involve the use of heavy equipment, which would contain fuels and oils, and various other products such as concrete, paints, and adhesives. Small quantities of potentially toxic substances (e.g., petroleum and other chemicals used to operate and maintain construction equipment) would be used at the project site and transported to and from the site during construction. However, the project contractor would be required to comply with all California Health and Safety Codes and local City ordinances regulating the handling, storage, and transportation of hazardous and toxic materials. Thus, construction of the proposed project would not create a significant hazard to the public or the environment through reasonably foreseeable upset and accident conditions involving the likely release of hazardous materials into the environment.

During project operation, the proposed tower would emit radio frequency electromagnetic energy (RF-EME) in the project vicinity. For RF-EME sources such as the proposed antennas, the Federal Communications Commission (FCC) has developed Maximum Permissible Exposure (MPE) Limits for general public exposures and occupational exposures. The MPE limits for RF-EME emissions are designed to provide a substantial margin of safety. The limits apply for continuous exposures and are intended to provide a prudent margin of safety for all persons, regardless of age, gender, size, or health. Importantly, Section 332, subdivision (c)(7)(B)(iv), of the Telecommunications Act provides:

> No State or local government or instrumentality thereof may regulate the placement, construction, and modification of personal wireless services facilities on the basis of the environmental effects of radio frequency emissions to the extent that such facilities comply with the Commission's regulations concerning such emissions.

As presented above, federal telecommunications jurisprudence has established that municipalities cannot regulate in the area of RF-EME emissions in any way.

The proposed project would not be manned during operations. As such, the project would not result in occupational exposures to RF-EME emissions. With respect to the general public, personal communication facilities (PCF) operate within a frequency range of 700

to 1,900 megahertz (MHz). PCFs typically consist of: (1) electronic transceivers (the radios or cabinets) connected to wired telephone lines; and (2) antennas that send the wireless signals created by the transceivers to be received by individual subscriber units (PCF telephones). Transceivers are typically connected to antennas by way of coaxial cables. Because of the short wavelength of PCF services, the antennas require line-of-site paths for good propagation and are typically installed aboveground. Antennas are constructed to concentrate energy towards the horizon, with as little energy as possible scattered towards the ground or sky. Such a design, combined with the low-power PCFs, generally eliminates the possibility for exposure to approach MPE levels allowed under the FCC, with the exception of areas directly in front of the antennas. Given that the antennas would be installed at the top of the proposed 180-foot tower, the general public would not be exposed to MPE levels of RF-EME emissions.

Based on the above, the proposed project would be required to comply with all applicable provisions of the California Health and Safety Code, CCR Section 4650, and the FCC. In addition, development of the proposed project would not create a significant hazard to the public or the environment through reasonably foreseeable upset and accident conditions involving the likely release of hazardous materials into the environment, and a ***less-than-significant*** impact would occur.

c. The closest school to the project site is Warren T. Eich Middle School, located approximately 0.5-mile southwest of the project site. Thus, the project site is not located within a quarter mile of any existing or proposed schools. Therefore, the proposed project would have ***no impact*** related to hazardous emissions or the handling of hazardous or acutely hazardous materials, substances, or waste within one-quarter mile of an existing or proposed school.

d. According to the Department of Toxic Substances Control's Envirostor Database, the project site is not located on a site that is included on a list of hazardous materials sites compiled pursuant to Government Code Section 65962.5. Thus, the proposed project would not create a significant hazard to the public or the environment related to being located on a site that is included on a list of hazardous materials sites compiled pursuant to Government Code Section 65962.5, and ***no impact*** would occur.

e. The nearest airport to the project site is the Sacramento McClellan Airport, located approximately 10 miles southwest of the project site. Thus, the project site is not located within two miles of any public airports, and does not fall within an airport land use plan area. Therefore, ***no impact*** would occur related to the project being located within an airport land use plan or within two miles of a public airport or public use airport, thereby resulting in a safety hazard or excessive noise for people residing or working in the project area.

f. The proposed project would involve the installation of a radio communications tower, as well as the associated shelter, access roadway, emergency generator, and propane tank. The proposed access roadway would be private and would be constructed in compliance with all State and local regulations; thus, the access roadway would not adversely affect emergency access or emergency evacuation efforts. As a result, the project would result in a ***less-than-significant*** impact with respect to impairing the implementation of or

physically interfering with an adopted emergency response plan or emergency evacuation plan.

g. Issues related to wildfire hazards are discussed in Section 3.2.20, Wildfire, of this IS/MND. As noted therein, the project site is not located within or near a Very High Fire Hazard Severity Zone (VHFHSZ). In addition, the project site is located within a developed area of the City and, thus, is not particularly susceptible to wildland fire.

Project construction would involve the use of heavy equipment, welding, and other activities that have the potential to ignite fires. Malfunction of equipment that could cause a fire is extremely unlikely during project construction. However, the contractor would comply with Cal-OSHA standards for the storage and handling of fuels, flammable materials, and common construction-related hazardous materials and for fire prevention. In addition, the project would meet the minimum standards set forth by Public Resources Code Section 4290, Title 14, for fire protection and emergency water standards. Compliance with the aforementioned regulations would ensure that the potential for wildland fires is reduced to the maximum extent feasible.

Based on the above, the potential for wildland fires to reach the project site would be limited. Based on the above, the proposed project would not expose people or structures to the risk of loss, injury or death involving wildland fires, and a ***less-than-significant*** impact would occur.

3.2.9.2 Mitigation Measures

The proposed project would not result in any potentially significant impacts related to hazards and hazardous materials; therefore, mitigation measures would not be required.

3.2.9.3 References

California Department of Forestry and Fire Protection. *Fire Hazard Severity Zone Viewer.* Available at: https://egis.fire.ca.gov/FHSZ/. Accessed April 2022.

California Department of Industrial Relations. *California Code of Regulations Section 4650. Storage, Handling, and Use of Cylinders.* Available at: https://www.dir.ca.gov/title8/4650.html#:~:text=(b)%20Inside%20of%20buildings%2C,such%20as%20oil%20or%20excelsior. Accessed May 2022.

California Department of Toxic Substances Control. 2020. *Cortese List: Section 65962.5(a).* Available at: https://calepa.ca.gov/sitecleanup/corteselist/section-65962-5a/. Accessed April 2022.

California Department of Toxic Substances Control. 2020. *EnviroStor Hazardous Waste and Substance Site List (Cortese).* Available at: https://www.envirostor.dtsc.ca.gov/public/map/?global_id=31400006. Accessed April 2022.

City of Roseville. 2017. *Location of Roseville Fire Stations*. Roseville, California. Available at: https://www.roseville.ca.us/UserFiles/Servers/Server_7964838/File/Government

/Departments/Fire%20Dept/Fire%20Station%20Locations/Location%20of%20Roseville%20Fire%20Stations%20-%202017.pdf. Accessed April 2022.

EBI Consulting. *Radio Frequency – Electromagnetic Energy (RF-EME) Compliance Report*. August 4, 2020.

U.S. Department of Housing and Urban Development. *Acceptable Separation Distance Electronic Assessment Tool.* Available at: https://www.hudexchange.info/programs/environmental-review/asd-calculator/. Accessed June 2022.

3.2.10 Hydrology and Water Quality

X. Hydrology and Water Quality	Potentially Significant Impact	Less-than-Significant with Mitigation Incorporated	Less-than-Significant Impact	No Impact
Would the project:				
a. Violate any water quality standards or waste discharge requirements or otherwise substantially degrade surface or ground water quality?	☐	☐	☒	☐
b. Substantially decrease groundwater supplies or interfere substantially with groundwater recharge such that the project may impede sustainable groundwater management of the basin?	☐	☐	☒	☐
c. Substantially alter the existing drainage pattern of the site or area, including through the alteration of the course of a stream or river or through the addition of impervious surfaces in a manner which would:				
i. result in substantial erosion or siltation on- or off-site;	☐	☐	☒	☐
ii. substantially increase the rate or amount of surface runoff in a manner which would result in flooding on- or offsite;	☐	☐	☒	☐
iii. create or contribute runoff water which would exceed the capacity of existing or planned stormwater drainage systems or provide substantial additional sources of polluted runoff; or	☐	☐	☒	☐
iv. impede or redirect flood flows?	☐	☐	☐	☒
d. In flood hazard, tsunami, or seiche zones, risk release of pollutants due to project inundation?	☐	☐	☐	☒
e. Conflict with or obstruct implementation of a water quality control plan or sustainable groundwater management plan?	☐	☐	☒	☐

3.2.10.1 Discussion

a. As noted previously, the project would not include substantial ground disturbing activities. The State Water Resources Control Board (SWRCB) regulates stormwater discharges associated with construction activities where clearing, grading, or excavation results in a land disturbance of one or more acres. Given that the proposed project would disturb less than one acre of land, the proposed construction activities would not be subject to

applicable SWRCB regulations. The ground disturbance associated with the proposed project would be minimal and would occur over a short period of time, and the contractor would be required to comply with the City BMPs listed in Section 2.4 of this document. Such BMPs include erosion control and hazardous material control measures that would ensure that adverse impacts related to stormwater discharge and water quality would not occur. Thus, the proposed project would not violate any water quality standards or waste discharge requirements or otherwise substantially degrade surface or ground water quality.

Based on the above, the proposed project would not substantially degrade surface water quality or conflict with any applicable water quality control or management plans. Thus, a ***less-than-significant*** impact would occur.

b,e. The City of Roseville's groundwater is derived from the North American Subbasin, which is part of the Sacramento Valley Groundwater Basin. New impervious surfaces created by the project would be limited to a relatively small foundation necessary to support the proposed structures, and the project would not include any water use. Thus, the project would not interfere substantially with groundwater recharge within the North American Subbasin.

Based on the above, the proposed project would not substantially degrade groundwater quality or substantially interfere with groundwater recharge, and a ***less-than-significant*** impact would occur.

ci-iii. The proposed project is not anticipated to create a substantial amount of new impervious surfaces on the project site. The proposed impervious surfaces would be limited to a concrete foundation supporting the proposed radio communications tower, associated shelter, emergency generator, and propane tank, as well as the access roadway. Furthermore, only a small portion of the soil would be exposed during construction of the project and, thus, the project would not result in substantial erosion or siltation. Consequently, the proposed project would not substantially increase stormwater runoff relative to existing conditions. Therefore, the proposed project would result in a ***less-than-significant*** impact related to soil erosion, surface runoff, and stormwater drainage.

civ. According to the Federal Emergency Management Agency (FEMA) Flood Insurance Rate Map for the project site, the project site is located within an Area of Minimal Flood Hazard (Zone X). The site is not classified as a Special Flood Hazard Area or otherwise located within a 100-year or 500-year floodplain. Therefore, development of the proposed project would not impede or redirect flood flows and ***no impact*** would result.

d. As discussed under question 'civ' above, the project site is not located within a flood hazard zone. Tsunamis are defined as sea waves created by undersea fault movement, whereas a seiche is a long-wavelength, large-scale wave action set up in a closed body of water such as a lake or reservoir. The project site is not located in proximity to a coastline and would not be potentially affected by flooding risks associated with tsunamis. Seiches do not pose a risk to the proposed project, as the project site is not located adjacent to a large, closed body of water. Based on the above, the proposed project would not pose a risk related to the release of pollutants due to project inundation due to flooding, tsunami, or seiche, and ***no impact*** would occur.

3.2.10.2 Mitigation Measures

The proposed project would not result in any potentially significant impacts related to hydrology and water quality; therefore, mitigation measures would not be required.

3.2.10.3 References

California Department of Water Resources. 2018. *DWR Groundwater Basin Boundary Assessment Tool (BBAT).* Available at: https://gis.water.ca.gov/app/bbat/. Accessed April 2022.

Federal Emergency Management Agency. 2018. *National Flood Hazard Layer (NFHL) Viewer. Map Number 06061C1032H*. Available: https://www.fema.gov/flood-maps/national-flood-hazard-layer. Accessed April 2022.

3.2.11 Land Use and Planning

XI. Land Use and Planning	Potentially Significant Impact	Less-than-Significant with Mitigation Incorporated	Less-than-Significant Impact	No Impact
Would the project:				
a. Physically divide an established community?	☐	☐	☒	☐
b. Cause a significant environmental impact due to a conflict with any land use plan, policy, or regulation adopted for the purpose of avoiding or mitigating an environmental effect?	☐	☐	☒	☐

3.2.11.1 Discussion

a. A project risks dividing an established community if the project would introduce infrastructure or alter land use so as to change the land use conditions in the surrounding community or isolate an existing land use. Existing land uses in the project vicinity include shopping centers with a variety of retail and commercial uses to the north, east, and southeast; undeveloped land to the south and southwest, across Strauch Drive; and shopping centers to the west and northwest, across Strauch Drive. In addition, the proposed radio communications tower would encompass a portion of a currently vacant parcel and, thus, would not isolate an existing land use. As such, the proposed project would not physically divide an established community and a ***less-than-significant*** impact would occur.

b. The project site is currently designated CC per the City of Roseville's General Plan, and the site is zoned PD7. The proposed radio communications tower is an allowed use in the PD7 zoning designation, and would be subject to all requirements and standards pursuant to the PD7 district. Therefore, the project would be consistent with the type and intensity of uses anticipated for the site in the General Plan and generally analyzed in the General Plan EIR. Furthermore, as demonstrated throughout this IS/MND, the proposed project would not conflict with City policies and regulations adopted for the purpose of avoiding or mitigating an environmental effect.

   Based on the above, the project would not cause a significant environmental impact due to conflicts with a land use plan, policy, or regulation adopted for the purpose of avoiding or mitigating an environmental effect. Therefore, a ***less-than-significant*** impact would occur.

3.2.11.2 Mitigation Measures

The proposed project would not result in any potentially significant impacts related to land use and planning. Therefore, mitigation measures would not be required.

3.2.11.3 References

City of Roseville. *City of Roseville General Plan 2035*. Adopted June 15, 2016. Amended August 17, 2016. Available at: https://www.roseville.ca.us/cms/One.aspx?portalId=7964922&pageId=8774544. Accessed May 2022.

3.2.12 Mineral Resources

XII. Mineral Resources	Potentially Significant Impact	Less-than-Significant with Mitigation Incorporated	Less-than-Significant Impact	No Impact
Would the project:				
a. Result in the loss of availability of a known mineral resource that would be of value to the region and the residents of the state?	☐	☐	☐	☒
b. Result in the loss of availability of a locally important mineral resource recovery site delineated on a local general plan, specific plan, or other land use plan?	☐	☐	☐	☒

3.2.12.1 Discussion

a,b. Mineral extraction operations do not exist on or adjacent to the project site. Mineral resources are not evaluated in the *City of Roseville 2035 General Plan Update EIR* because the City does not designate any territory within the City for Resource extraction and the City does not overlie any known deposits of economically valuable mineral sources. Additionally, the City does not have a Surface Mining and Reclamation Act permit. Because the project site does not contain mineral resources and the construction of the proposed project would not result in the loss of any known mineral resources, ***no impact*** to mineral resources would occur.

3.2.12.2 Mitigation Measures

The proposed project would not result in any potentially significant impacts related to mineral resources. Therefore, mitigation measures would not be required.

3.2.12.3 References

City of Roseville. *2035 General Plan Update EIR.* August 5, 2020. Available at: https://www.roseville.ca.us/government/departments/development_services/planning/general_plan_development_guidelines. Accessed April 2022.

City of Roseville. *City of Roseville General Plan 2035*. Adopted June 15, 2016. Amended August 17, 2016. Available at: https://www.roseville.ca.us/cms/One.aspx?portalId=7964922&pageId=8774544. Accessed April 2022.

3.2.13 Noise

XIII. Noise	Potentially Significant Impact	Less-than-Significant with Mitigation Incorporated	Less-than-Significant Impact	No Impact
Would the project result in:				
a. Generation of a substantial temporary or permanent increase in ambient noise levels in the vicinity of the project in excess of standards established in a local general plan or noise ordinance or applicable standards of other agencies?	☐	☐	☒	☐
b. Generation of excessive groundborne vibration or groundborne noise levels?	☐	☐	☒	☐
c. For a project located within the vicinity of a private airstrip or an airport land use plan or, where such a plan has not been adopted, within two miles of a public airport or public use airport, would the project expose people residing or working in the project area to excessive noise levels?	☐	☐	☐	☒

3.2.13.1 Discussion

a. The following sections present information regarding sensitive noise receptors in proximity to the project site, the existing noise environment, and the potential for the proposed project to result in impacts during project construction and operation. The following term is referenced in the sections below:

- Decibel (dB): A unit of sound energy intensity. An A-weighted decibel (dBA) is a decibel corrected for the variation in frequency response to the typical human ear at commonly encountered noise levels. All references to dB in this section will be A-weighted unless noted otherwise.

Sensitive Noise Receptors

Some land uses are considered more sensitive to noise than others, and, thus, are referred to as sensitive noise receptors. Land uses often associated with sensitive noise receptors generally include residences, schools, libraries, hospitals, and passive recreational areas. Noise sensitive land uses are typically given special attention in order to achieve protection from excessive noise. In the vicinity of the project site, the nearest existing sensitive receptor would be the single-family residences located west of the project site, approximately 400 feet away.

Existing Noise Environment

The ambient noise environment in the project vicinity is primarily characterized by vehicle traffic on roadways within the vicinity of the project site, including Douglas Boulevard, Rocky Ridge Drive, and Strauch Drive.

Standards of Significance

Policy N1.9 from the Roseville General Plan Noise Element states that construction-related noise that is consistent with the Roseville Noise Ordinance (RMC, Chapter 9.24, Noise Regulation) would be exempt from the noise standards outlined in the Noise Element. Noises resulting from construction activities are prohibited by the RMC, Chapter 9.24, Noise Regulation, during nighttime hours (7:00 PM to 7:00 AM, Monday through Friday, and 8:00 PM to 8:00 AM, Saturday, Sunday and, Holidays). The RMC also specifies that all construction equipment shall be fitted with factory installed muffling devices and that all construction equipment shall be maintained in good working order in order to prevent excessive noise.

Impact Analysis

During construction of the proposed project, heavy equipment would be used on-site, which would result in temporary noise level increases during the construction period. Noise levels would vary depending on the type of equipment used, how the equipment is operated, and how well the equipment is maintained. Table 3.2.13-1 shows maximum noise levels associated with typical construction equipment.

Table 3.2.13-1. Construction Equipment Noise

Type of Equipment	Maximum Level, dB at 50 feet
Backhoe	78
Compressor (air)	78
Excavator	81
Generator	81
Pneumatic Tools	85

Source: Federal Highway Administration, Roadway Construction Noise Model User's Guide, January 2006.

As demonstrated in the table, activities involved in typical construction would generate maximum noise levels up to 85 dB at a distance of 50 feet. Given that the nearest receptors are located approximately 400 feet from the project site, noise levels at the nearest receptors would be significantly reduced from the levels presented above.

Furthermore, temporary construction noises are exempt from the City's noise standards. Nonetheless, pursuant to RMC Chapter 9.24, Noise Regulation, construction would only occur during allowable hours, and all construction equipment would be fitted with muffling devices and maintained in good working order. Compliance with such restrictions would ensure that construction noise associated with the proposed project would be less than significant.

Radio communications towers are not known to emit perceivable noise or sound; thus, operation of the proposed project would not result in increased noise levels.

Conclusion

Based on the above, project construction noise would not conflict with the City's General Plan if restricted to the hourly limits established by the City's Noise Ordinance. In addition, the proposed project would not generate any noise level increases during operation. Therefore, the proposed project would not result in a temporary exceedance of the standards established in the local general plan or noise ordinance, or applicable standards of other agencies, and a ***less-than-significant*** impact would occur.

b. Similar to noise, vibration involves a source, a transmission path, and a receiver. However, noise is generally considered to be pressure waves transmitted through air, whereas vibration usually consists of the excitation of a structure or surface. As with noise, vibration consists of an amplitude and frequency. A person's perception of the vibration depends on their individual sensitivity to vibration, as well as the amplitude and frequency of the source and the response of the system which is vibrating.

Vibration is measured in terms of acceleration velocity, or displacement. A common practice is to monitor vibration in terms of peak particle velocities (PPV) in inches per second (in/sec). Standards pertaining to perception as well as damage to structures have been developed for vibration levels defined in terms of PPV. Human and structural response to different vibration levels is influenced by a number of factors, including ground type, distance between source and receptor, duration, and the number of perceived vibration events.

Table 3.2.13-2, which was developed by Caltrans, shows the vibration levels that would normally be required to result in damage to structures. As presented in the table, the threshold for architectural damage to structures is 0.20 in/sec PPV and continuous vibrations of 0.10 in/sec PPV, or greater, would likely cause annoyance to sensitive receptors.

The only vibration-generating activities associated with the proposed project would occur during construction activities. Table 3.2.13-3 shows the typical vibration levels produced by construction equipment at various distances. At a distance of 25 feet or greater, vibration levels from such equipment would be below the 0.20 in/sec threshold recommended by Caltrans.

The proposed construction activities would occur at a distance of over 400 feet from the single-family residences located to the west of the site. Therefore, per the vibration levels shown in Table 3.2.13-3, groundborne vibrations would be below the 0.20 in/sec PPV threshold established by Caltrans for architectural damage to buildings.

The proposed project would not involve any uses or operations that would generate substantial groundborne vibration.

Based on the above, the proposed project would not expose people to or generate excessive groundborne vibration or groundborne noise levels, and a ***less-than-significant*** impact would occur.

Table 3.2.13-2. Effects of Vibration on People and Buildings

PPV			
mm/sec	**in/sec**	**Human Reaction**	**Effect on Buildings**
0.15 to 0.30	0.006 to 0.019	Threshold of perception; possibility of intrusion	Vibrations unlikely to cause damage of any type
2.0	0.08	Vibrations readily perceptible	Recommended upper level of the vibration to which ruins and ancient monuments should be subjected
2.5	0.10	Level at which continuous vibrations begin to annoy people	Virtually no risk of "architectural" damage to normal buildings
5.0	0.20	Vibrations annoying to people in buildings (this agrees with the levels established for people standing on bridges and subjected to relative short periods of vibrations)	Threshold at which there is a risk of "architectural" damage to normal dwelling - houses with plastered walls and ceilings. Special types of finish such as lining of walls, flexible ceiling treatment, etc., would minimize "architectural" damage
10 to 15	0.4 to 0.6	Vibrations considered unpleasant by people subjected to continuous vibrations and unacceptable to some people walking on bridges	Vibrations at a greater level than normally expected from traffic, but would cause "architectural" damage and possibly minor structural damage

Source: Caltrans. Transportation Related Earthborne Vibrations. TAV-02-01-R9601. February 20, 2002.

Table 3.2.13-3 Vibration Levels for Various Construction Equipment

Type of Equipment	PPV at 25 feet (in/sec)	PPV at 50 feet (in/sec)
Loaded Trucks	0.076	0.025
Small Bulldozer	0.003	0.000
Auger/drill Rigs	0.089	0.029

Source: Federal Transit Administration, Transit Noise and Vibration Impact Assessment Guidelines, May 2006.

c. The nearest airport to the project site is the Sacramento McClellan Airport, located approximately 8.5 miles southwest of the project site. Thus, the project site is not located within two miles of any public airports, and does not fall within an airport land use plan area. Therefore, ***no impact*** would occur related to the project being located within an airport land use plan or within two miles of a public airport or public use airport, thereby resulting in a safety hazard or excessive noise for people residing or working in the project area.

3.2.13.2 Mitigation Measures

The proposed project would not result in any potentially significant impacts related to noise. Therefore, mitigation would not be required.

3.2.13.3 References

City of Roseville. *General Plan Noise Element*. Available at: https://p1cdn4static.civiclive.com/UserFiles/Servers/Server_7964838/File/Government/Departments/Development%20Services/Planning/General%20Plan/Final%20General%20Plan%202020/09%20Noise_Final.pdf. Accessed October 2021.

City of Roseville. *Roseville Municipal Code Chapter 9.24 Noise Regulation*. Available at: https://qcode.us/codes/roseville/. Accessed October 2021.

3.2.14 Population and Housing

XIV. Population and Housing	Potentially Significant Impact	Less-than-Significant with Mitigation Incorporated	Less-than-Significant Impact	No Impact
Would the project:				
a. Induce substantial unplanned population growth in an area, either directly (e.g., by proposing new homes and businesses) or indirectly (e.g., through extension of roads or other infrastructure)?	☐	☐	☐	☒
b. Displace a substantial number of existing people or housing, necessitating the construction of replacement housing elsewhere?	☐	☐	☐	☒

3.2.14.1 Discussion

a,b. The proposed project would include the construction of a radio communications tower, as well as the associated shelter, access roadway, emergency generator, and propane tank. The project site is located in a developed area and would not include the extension of major infrastructure. Given the nature of the proposed project, the project would not create a large number of jobs or result in an influx of new residents to the project area. In addition, the proposed project would not include the construction of new housing or the demolition of existing residences. Therefore, the project would not result in substantial unplanned population growth or the displacement of existing people or housing, and ***no impact*** would occur.

3.2.14.2 Mitigation Measures

The proposed project would not result in any potentially significant impacts related to population and housing. Therefore, mitigation would not be required.

3.2.14.3 References

None.

3.2.15 Public Services

XV. Public Services	Potentially Significant Impact	Less-than-Significant with Mitigation Incorporated	Less-than-Significant Impact	No Impact
Would the project:				
a. Result in substantial adverse physical impacts associated with the provision of new or physically altered governmental facilities or a need for new or physically altered governmental facilities, the construction of which could cause significant environmental impacts, in order to maintain acceptable service ratios, response times, or other performance objectives for any of the following public services:				
Fire protection?	☐	☐	☐	☒
Police protection?	☐	☐	☐	☒
Schools?	☐	☐	☐	☒
Parks?	☐	☐	☐	☒
Other public facilities?	☐	☐	☐	☒

3.2.15.1 Discussion

a. The Roseville Fire Department operates nine fire stations that provide fire protection, suppression, emergency medical services, and hazardous material management within the City of Roseville, including the project site. The closest station is located approximately 1.2 miles southeast of the project site (Fire Station No. 4). Although a propane tank would be present on the project site, as discussed in Section 3.2.9, Hazards and Hazardous Materials, of this document, such tanks are highly regulated and would not result in an increased demand for fire protection services. The Roseville Police Department, headquartered approximately 2.5 miles northwest of the project site at 1051 Junction Boulevard, provides police protection services throughout the City. Because the proposed project would not add any additional residents to the area, an increase in demand for fire and police services would not occur.

The project site is located within the Roseville City School District. Because the proposed project would not result in population growth in the area, implementation of the project would not generate additional demand for school facilities.

The nearest existing park to the project site is Maidu Regional Park, located approximately 3,000 feet south of the project site. Because the proposed project would not result in population growth in the area, additional demand for parks would not occur.

Based on the above, the proposed project would result in ***no impact*** relating to the provision of public services, including fire and police protection, schools, parks, and other public facilities.

3.2.15.2 Mitigation Measures

The proposed project would not result in any potentially significant impacts related to the provision of public services. Therefore, mitigation would not be required.

3.2.15.3 References

City of Roseville. 2017. *Location of Roseville Fire Stations*. Roseville, California. Available at: https://www.roseville.ca.us/UserFiles/Servers/Server_7964838/File/Government/Departments/Fire%20Dept/Fire%20Station%20Locations/Location%20of%20Roseville%20Fire%20Stations%20-%202017.pdf. Accessed April 2022.

3.2.16 Recreation

XVI. Recreation	Potentially Significant Impact	Less-than-Significant with Mitigation Incorporated	Less-than-Significant Impact	No Impact
Would the project:				
a. Increase the use of existing neighborhood and regional parks or other recreational facilities such that substantial physical deterioration of the facility would occur or be accelerated?	☐	☐	☐	☒
b. Include recreational facilities or require the construction or expansion of recreational facilities that might have an adverse physical effect on the environment?	☐	☐	☐	☒

3.2.16.1 Discussion

a,b. The proposed project would include the development of a radio communications tower, as well as the associated shelter, emergency generator, propane tank, and access roadway, on a site that is currently designated for uses which are commercial in nature. The proposed project would not result in any population growth that could result in increased use of existing recreational facilities, nor would the proposed project include or require construction or expansion of existing recreational facilities. Thus, ***no impact*** would occur.

3.2.16.2 Mitigation Measures

The proposed project would not result in any potentially significant impacts related to recreational facilities. Therefore, mitigation would not be required.

3.2.16.3 References

None.

3.2.17 Transportation

XVII. Transportation	Potentially Significant Impact	Less-than-Significant with Mitigation Incorporated	Less-than-Significant Impact	No Impact
Would the project:				
a. Conflict with a program, plan, ordinance, or policy addressing the circulation system including transit, roadway, bicycle and pedestrian facilities?	☐	☐	☒	☐
b. Would the project conflict or be inconsistent with CEQA Guidelines Section 15064.3, subdivision (b)?	☐	☐	☒	☐
c. Substantially increase hazards due to a geometric design feature (e.g., sharp curves or dangerous intersections) or incompatible uses (e.g., farm equipment)?	☐	☐	☒	☐
d. Result in inadequate emergency access?	☐	☐	☒	☐

3.2.17.1 Discussion

a-d. During construction, the proposed project would generate a minor amount of traffic on local roadways associated with construction worker commutes and the transport of materials for the project. However, such construction traffic would be limited, and would be temporary in nature. While the proposed project would include construction of a roadway extending east from the project site to the adjacent parking lot, the roadway would not be available for public use.

During the construction period, construction equipment and employee vehicles would access the project site by way of the new roadway. The new roadway and the existing parking area would be sufficient in length to accommodate the project-generated vehicles and equipment such that vehicles would not queue into the public roadway and disrupt the flow of traffic. In addition, vehicle speeds when passing through the adjacent parking lot to access the project site would be substantially slow to avoid any hazards to other vehicles and/or pedestrians.

Furthermore, the proposed project would not include development which would alter or increase demand for transit, bicycle, or pedestrian facilities. While the proposed project would temporarily result in an increase in VMT during the construction period, operation and maintenance of the proposed project would not substantially affect local or regional VMT. Thus, impacts relating to VMT would be less than significant, and the project would not conflict with a program, plan, ordinance, or policy addressing the circulation system, including transit, roadway, bicycle, and pedestrian facilities or with CEQA Guidelines section 15064.3, subdivision (b). The project would include the development of a private

access roadway connecting the project site to the adjacent parcel. The access roadway would be required to comply with all applicable roadway construction regulations, and access would be limited to maintenance personnel. Therefore, the project would not substantially increase hazards due to a geometric design feature or incompatible uses or result in inadequate emergency access.

Based on the above, the proposed project would result in a ***less-than-significant*** impact related to transportation.

3.2.17.2 Mitigation Measures

The proposed project would not result in any potentially significant impacts related to transportation. Therefore, mitigation would not be required.

3.2.17.3 References

None.

3.2.18 Tribal Cultural Resources

XVIII. Tribal Cultural Resources	Potentially Significant Impact	Less-than-Significant with Mitigation Incorporated	Less-than-Significant Impact	No Impact
Would the project cause a substantial adverse change in the significance of a tribal cultural resource, defined in Public Resources Code Section 21074 as either a site, feature, place, cultural landscape that is geographically defined in terms of the size and scope of the landscape, sacred place, or object with cultural value to a California Native American tribe, and that is:				
a. Listed or eligible for listing in the California Register of Historical Resources, or in a local register of historical resources as defined in Public Resources Code section 5020.1(k), or	☐	☒	☐	☐
b. A resource determined by the lead agency, in its discretion and supported by substantial evidence, to be significant pursuant to criteria set forth in subdivision (c) of Public Resources Code Section 5024.1. In applying the criteria set forth in subdivision (c) of Public Resource Code Section 5024.1, the lead agency shall consider the significance of the resource to a California Native American tribe.	☐	☒	☐	☐

3.2.18.1 Discussion

a,b. The project site is located in an urbanized area and is surrounded by existing development. Additionally, the project would not involve substantial ground disturbing activities. However, based on tribal consultation, the project site is considered a tribal cultural resource area.

A search of the NAHC's Sacred Lands File was conducted, and did not indicate the presence of any known cultural resources on the project site. In compliance with AB 52 (Public Resources Code Section 21080.3.1), the City distributed project notification letters to the appropriate Tribes on June 3, 2022. One tribe, the United Auburn Indian Community of the Auburn Rancheria (UAIC), requested consultation. The UAIC is a federally recognized Tribe comprised of both Miwok and Maidu (Nisenan) Tribal members who are traditionally and culturally affiliated with the project area. The Tribe has a deep spiritual, cultural, and physical ties to their ancestral land and are contemporary stewards of their culture and landscapes. The Tribal community represents a continuity and endurance of their ancestors by maintaining their connection to their history and culture. It is the Tribe's goal to ensure the preservation and continuance of their cultural heritage for current and

future generations. The UAIC has determined that tribal cultural resources are present on the project site and consultation was concluded with agreed upon mitigation measures on July 7, 2022.

Based on the above, the potential exists that previously unknown subsurface tribal cultural resources could be encountered on the project site. Should buried or otherwise unknown tribal cultural resources be encountered and/or damaged during construction, a potentially significant impact would occur. However, implementation of Mitigation Measures TCR-1 through TCR- 5 would reduce the potential impact to ***less than significant with mitigation incorporated***.

3.2.18.2 Mitigation Measures

Mitigation Measure TCR-1: Tribal Monitoring

The Construction Manager shall retain one tribal monitor to monitor all vegetation clearing and removal, and all initial surface grading of the project area, down to, for footings, 40 feet below the surface. Tribal monitoring is not required during above-surface construction activities, or when excavating or re-excavating imported fill. Tribal Monitoring is required for soil which has already been previously disturbed as part of the construction project.

The tribal monitor shall have the authority to temporarily pause ground disturbance within 100 feet of the discovery for a duration long enough to examine potential tribal cultural resources that may become unearthed during the activity. If tribal cultural resources or features are not identified, then construction activities shall proceed and agency notifications are not required. In the event that additional features of the Tribal Cultural Resource are identified, the unanticipated discovery procedures in Mitigation Measure TCR-2 shall be implemented.

The tribal monitor shall maintain daily monitoring logs, which shall be submitted to the City's Project Manager no later than the conclusion of the monitoring as proof of compliance.

Mitigation Measure TCR-2: Anticipated and Unanticipated Discover Procedures

If additional subsurface deposits believed to be cultural or human in origin, or tribal cultural resources, are discovered during construction, all work shall halt within a 100-foot radius of the discovery, and the Construction Manager shall immediately notify the City of Roseville Development Services Director by phone. The Construction Manager shall also immediately coordinate with the tribal monitor, or, in the absence of either, contact a qualified professional archaeologist, meeting the Secretary of the Interior's Professional Qualification Standards for archaeology and subject to approval by the City, to evaluate the significance of the find and develop appropriate management recommendations. All management recommendations shall be provided to the City in writing for the City's review

and approval. If recommended by the qualified professional and approved by the City, this may include modification of the no-work radius.

The UAIC and Tribal Monitor shall make a determination, based on professional judgement and supported by substantial evidence, within one business day of being notified, as to whether or not the find represents a tribal cultural resource. The subsequent actions will be determined by the type of discovery, as described below. These include: 1) a work pause that, upon further investigation, is not actually a discovery and the work pause was simply needed in order to allow for closer examination of soil (a "false alarm"); 2) a work pause and subsequent action for discoveries that are clearly not related to tribal resources, such as can and bottle dumps, artifacts of European origin, and remnants of built environment features; and 3) a work pause and subsequent action for discoveries that are likely related to tribal resources, such as midden soil, bedrock mortars, groundstone, or other similar expressions.

Whenever there is question as to whether or not the discovery represents a tribal resource, culturally affiliated tribes shall be consulted in making the determination. Whenever a tribal monitor is present, the monitor shall be consulted.

The following processes shall apply, depending on the nature of the find, subject to the review and approval of the City:

- *Response to False Alarms: If the Tribal Monitor determines that the find is negative for any cultural indicators, then work may resume immediately upon notice to proceed from the City's representative. No further notifications or tribal consultation is necessary, because the discovery is not a cultural resource of any kind. The Tribal Monitor or UAIC shall provide written documentation of this finding to the Project Manager this documentation may include the monitor logs or e-mail notification.*
- *Response to Non-Tribal Discoveries: If a tribal monitor is not present at the time of discovery and the City shall be notified immediately, to consult on a finding of eligibility and implementation of appropriate treatment measures, if the find is determined to be a Historical Resource under CEQA, as defined in Section 15064.5(a) of the CEQA Guidelines. The City of Roseville will notify any [tribe(s)] who, in writing, requested notice of unanticipated discovery of non-tribal resources. Notice shall include the photograph and description of the find, and a tribal representative shall have the opportunity to determine whether or not the find represents a tribal cultural resource. If a response is not received within 24 hours of notification (none of which time period may fall on weekends or City holidays), the City will deem this portion of the measure completed in good faith as long as the notification was made and documented. If requested by a [tribe(s)], the City may extend this timeframe, which shall be documented in writing (electronic communication may be used to satisfy this measure). If a notified tribe responds within 24 hours to indicate that the find represents a tribal cultural resource, then the Response to Tribal Discoveries portion of this measure applies. If the tribe does not respond or concurs that the discovery is non-tribal, work shall not resume within the no-work radius until the City, through consultation as appropriate, determines that the site either: 1) is not a Historical*

Resource under CEQA, as defined in Section 15064.5(a) of the CEQA Guidelines; or 2) that the treatment measures have been completed to its satisfaction.

- *Response to Tribal Discoveries: If the find represents a tribal or potentially tribal cultural resource that does not include human remains, the tribe and City shall be notified. The City will consult with the tribe on a finding of eligibility and implement appropriate treatment measures, if the find is determined to be either a Historical Resource under CEQA, as defined in Section 15064.5(a) of the CEQA Guidelines, or a Tribal Cultural Resource, as defined in Section 21074 of the Public Resources Code. Preservation in place is the preferred treatment, if feasible. Work shall not resume within the no-work radius until the City, through consultation as appropriate, determines that the site either: 1) is not a Historical Resource under CEQA, as defined in Section 15064.5(a) of the CEQA Guidelines; or 2) not a Tribal Cultural Resource, as defined in Section 21074 of the Public Resources Code; or 3) that the treatment measures have been completed to its satisfaction.*

- *Response to Human Remains: If the find includes human remains, or remains that are potentially human, the construction supervisor or on-site archaeologist shall ensure reasonable protection measures are taken to protect the discovery from disturbance (AB 2641) and shall notify the City and Placer County Coroner (per § 7050.5 of the Health and Safety Code). The provisions of § 7050.5 of the California Health and Safety Code, § 5097.98 of the California Public Resources Code, and Assembly Bill 2641 shall be implemented. If the Coroner determines the remains are Native American and not the result of a crime scene, the Coroner will notify the Native American Heritage Commission (NAHC), which then will designate a Native American Most Likely Descendant (MLD) for the project (§ 5097.98 of the Public Resources Code). The designated MLD will have 48 hours from the time access to the property is granted to make recommendations concerning treatment of the remains. Public Resources Code § 5097.94 provides structure for mediation through the NAHC if necessary. If the landowner does not agree with the recommendations of the MLD, the NAHC can mediate (§ 5097.94 of the Public Resources Code).*

If no agreement is reached, the landowner must rebury the remains in a respectful manner where they will not be further disturbed (§ 5097.98 of the Public Resources Code). This will also include either recording the site with the NAHC or the appropriate Information Center; using an open space or conservation zoning designation or easement; or recording a reinternment document with the county in which the property is located (AB 2641). Work shall not resume within the no-work radius until the City, through consultation as appropriate, determines that the treatment measures have been completed to its satisfaction.

Mitigation Measure TCR-3: Restoration Location Designation

Following the completion of ground disturbance soil will be retained on site, and at a mutually agreed upon time, a location shall be selected for reburial and/or placement of soil to restore all cultural items or cultural soils to the TCR. The location selected shall be under the control of the property owner, in an area not planned for future disturbance, and can accommodate the recording of a deed restriction, should the reburial location be utilized for the project. A copy of a map showing the reburial location shall be filed with the

City for proof of compliance prior to construction and shall remain confidential. A deed restriction over the reburial location need not be filed with the County until materials have been reburied at the selected location. If the reburial location is not utilized for the project, then no further documentation or deed restrictions are required.

In the event that human remains or tribal cultural resources are encountered, the consultation and evaluation process in Mitigation Measure TCR-2 for the management of unanticipated discoveries shall be followed. Upon conclusion of that process, the Construction Manager shall rebury specified materials in the location selected for reburial, at the City's direction and discretion. The City shall reserve the right to dictate the nature, methods, and timing of the reburial.

Within 30 days of the reburial, and consistent with Section 5097.98(e) of the Public Resources Code, the location of the reburial shall be further recorded by a qualified professional on a DPR 523 Series Primary Record and Location Map and submitted to the North Central Information Center of the California Historical Resources Information Center [5097.98(e)(1)], Native American Heritage Commission, and a reinternment record filed with the County [5097.98(e)(3)]. A copy of the confidential record and transmittal to each repository shall be provided to the City as proof of compliance within 30 days of recording.

Mitigation Measure TCR-4: Install Protective Fencing During Construction

The construction contractor(s), UAIC Representative, and Tribal Monitor will install protective fencing or other acceptable methods around the culturally modified boulders, including a buffer area, before construction starts or restarts. Standard buffer areas are 100 feet, but may be increased or decreased if both the CEQA lead agency representative and affiliated Native American Tribes agree. The construction contractor(s) will maintain the protection throughout construction to avoid the resource/area of sensitivity during all remaining phases of construction. The area will be demarcated as an "Environmentally Sensitive Area".

Mitigation Measure TCR-5: Contribution for Reburial Costs

To fund costs of mitigation to the TCR, a financial contribution, will be made to the Roseville Maidu Museum for Tribal reburial costs. The contribution will be based on impacts documented during tribal monitoring, up to a maximum of $15,000.

3.2.18.3 References

Native American Heritage Commission. *Strauch Drive Radio Communications Tower Project*. April 19, 2022.

North Central Information Center. *Records Search Results for Strauch Drive Radio Communications Tower Project; NCIC File No.: PLA-22-35*. April 7, 2022.

3.2.19 Utilities and Service Systems

XIX. Utilities and Service Systems	Potentially Significant Impact	Less-than-Significant with Mitigation Incorporated	Less-than-Significant Impact	No Impact
Would the project:				
a. Require or result in the relocation or construction of new or expanded water, wastewater treatment, stormwater drainage, electric power, natural gas, or telecommunications facilities, the construction or relocation of which could cause significant environmental effects?	☐	☐	☒	☐
b. Have sufficient water supplies available to serve the project and reasonably foreseeable future development during normal, dry, and multiple dry years?	☐	☐	☒	☐
c. Result in a determination by the wastewater treatment provider that serves or may serve the project that it has adequate capacity to serve the project's projected demand in addition to the provider's existing commitments?	☐	☐	☒	☐
d. Generate solid waste in excess of state or local standards, or in excess of the capacity of local infrastructure, or otherwise impair the attainment of solid waste reduction goals?	☐	☐	☒	☐
e. Comply with federal, state, and local management and reduction statutes and regulations related to solid waste?	☐	☐	☒	☐

3.2.19.1 Discussion

a-e. Electricity for the proposed project would be provided by a new connection to an existing transformer. Water, wastewater, storm drainage infrastructure would not be impacted by the proposed project, as the project would not require connections to such utility features. While construction of the proposed project could generate a small amount of solid waste, the waste could be accommodated by the existing landfill facilities serving the City. Operation of the proposed project would not require solid waste or landfill services. Overall, the proposed project would not require the relocation or construction of new or expanded utilities.

Given that the proposed project is consistent with the site's current General Plan land use and zoning designations, the utility infrastructure within the project vicinity has been designed with adequate capacity to accommodate the minor increase in electricity

demand from development of the proposed radio communications tower, as well as other existing and planned uses in the project area. Therefore, the project would result in a ***less-than-significant*** impact related to utilities and service systems.

3.2.19.2 Mitigation Measures

The proposed project would not result in any potentially significant impacts related to utilities and service systems. Therefore, mitigation would not be required.

3.2.19.3 References

None.

3.2.20 Wildfire

XX. Wildfire	Potentially Significant Impact	Less-than-Significant with Mitigation Incorporated	Less-than-Significant Impact	No Impact
If located in or near state responsibility areas or lands classified as very high fire hazard severity zones, would the project:				
a. Substantially impair an adopted emergency response plan or emergency evacuation plan?	☐	☐	☐	☒
b. Due to slope, prevailing winds, and other factors, exacerbate wildfire risks of, and thereby expose project occupants to, pollutant concentrations from a wildfire or the uncontrolled spread of a wildfire?	☐	☐	☐	☒
c. Require the installation or maintenance of associated infrastructure (such as roads, fuel breaks, emergency water sources, power lines, or other utilities) that may exacerbate fire risk or that may result in temporary or ongoing impacts on the environment?	☐	☐	☐	☒
d. Expose people or structures to significant risks, including downslope or downstream flooding or landslides, as a result of runoff, post-fire slope instability, or drainage changes?	☐	☐	☐	☒

3.2.20.1 Discussion

a-d. According to the CAL FIRE Fire and Resource Assessment Program, the project site is not located within or near a State Responsibility Area or lands classified as a VHFHSZ. The nearest VHFHSZ is approximately 10 miles east of the project site. The project site is located in a Local Responsibility Area where the Roseville Fire Department is responsible for fire protection services. Because the proposed project consists only of the installation of a radio communications tower and does not involve adding new residents or changing circulation patterns, the proposed project would not impair implementation of an adopted emergency response plan or emergency evacuation plan. Additionally, the topography of the project site is relatively flat, and the site is located in an urbanized area of the City; thus, the project site is not susceptible to downstream flooding or landslide. Therefore, the proposed project would not be subject to substantial risks related to wildfires, and a ***less-than-significant*** impact would occur.

3.2.20.2 Mitigation Measures

The proposed project would not result in any potentially significant impacts related to wildfire. Therefore, mitigation would not be required.

3.2.20.3 References

California Department of Forestry and Fire Protection. *Fire Hazard Severity Zone Viewer.* Available at: https://egis.fire.ca.gov/FHSZ/. Accessed April 2022.

3.2.21 Mandatory Findings of Significance

XXI. Mandatory Findings of Significance	Potentially Significant Impact	Less-than-Significant with Mitigation Incorporated	Less-than-Significant Impact	No Impact
a. Does the project have the potential to substantially degrade the quality of the environment, substantially reduce the habitat of a fish or wildlife species, cause a fish or wildlife population to drop below self-sustaining levels, threaten to eliminate a plant or animal community, substantially reduce the number or restrict the range of a rare or endangered plant or animal, or eliminate important examples of the major periods of California history or prehistory?	☐	☒	☐	☐
b. Does the project have impacts that are individually limited but cumulatively considerable? ("Cumulatively considerable" means that the incremental effects of a project are considerable when viewed in connection with the effects of past projects, the effects of other current projects, and the effects of probable future projects.)	☐	☐	☒	☐
c. Does the project have environmental effects that will cause substantial adverse effects on human beings, either directly or indirectly?	☐	☐	☒	☐

3.2.21.1 Discussion

a. As discussed in Section 3.2.4, Biological Resources, of this IS/MND, the project site is subject to regular discing and is, therefore, regularly disturbed, and construction of the proposed project would not further degrade the quality of the environment, cause fish or wildlife populations to drop below self-sustaining levels, threaten to eliminate a plant or animal community or reduce the number or restrict the range of a rare or endangered plant or animal. Due to previous disturbance of the site, the site does not contain any known historic or prehistoric resources. However, the possibility remains that tree removal could affect protected nesting bird species. Additionally, previously unknown cultural resources or tribal cultural resources could be encountered during ground disturbing activities. Implementation of Mitigation Measures BIO-1, CUL-1, CUL-2, and TCR-1 through TCR-5 would ensure that the proposed project would not displace protected species or eliminate important examples of the major periods of California history or prehistory. Therefore, potential impacts would be ***less-than-significant with mitigation incorporated.***

b. The proposed project, in conjunction with other development within the City of Roseville, could incrementally contribute to cumulative impacts in the area. However, as

demonstrated in this IS/MND, all potential environmental impacts that could occur as a result of implementation of the proposed project would result in no impact or a less-than-significant impact through applicable General Plan policies and RMC Standards, as well as other local and State policies. In addition, the proposed project would be allowable under the project site's current land use and zoning designations. Therefore, development of the proposed project would not result in a cumulatively considerable contribution to cumulative impacts to cumulative impacts in the City of Roseville, and the proposed project's incremental contribution to cumulative impacts would be ***less than significant.***

c. As described in this IS/MND, the proposed project would comply with all applicable General Plan policies, RMC Standards, and other applicable local and State regulations. In addition, as discussed in Section 3.2.3, Air Quality, Section 3.2.7, Geology and Soils, Section 3.2.8, Greenhouse Gas Emissions, Section 3.2.9, Hazards and Hazardous Materials, Section 3.2.13, Noise, and Section 3.2.17, Transportation, of this IS/MND, the proposed project would not cause substantial effects to human beings, including effects related to exposure to air pollutants, hazardous materials, noise, and traffic. Therefore, the proposed project would result in a ***less-than-significant*** impact.

Updated Site Transformer (RE-TX)

Strauch Drive
City of Roseville Communications Installation
PLAN FOR ELECTRIC UTILITY IMPROVEMENTS

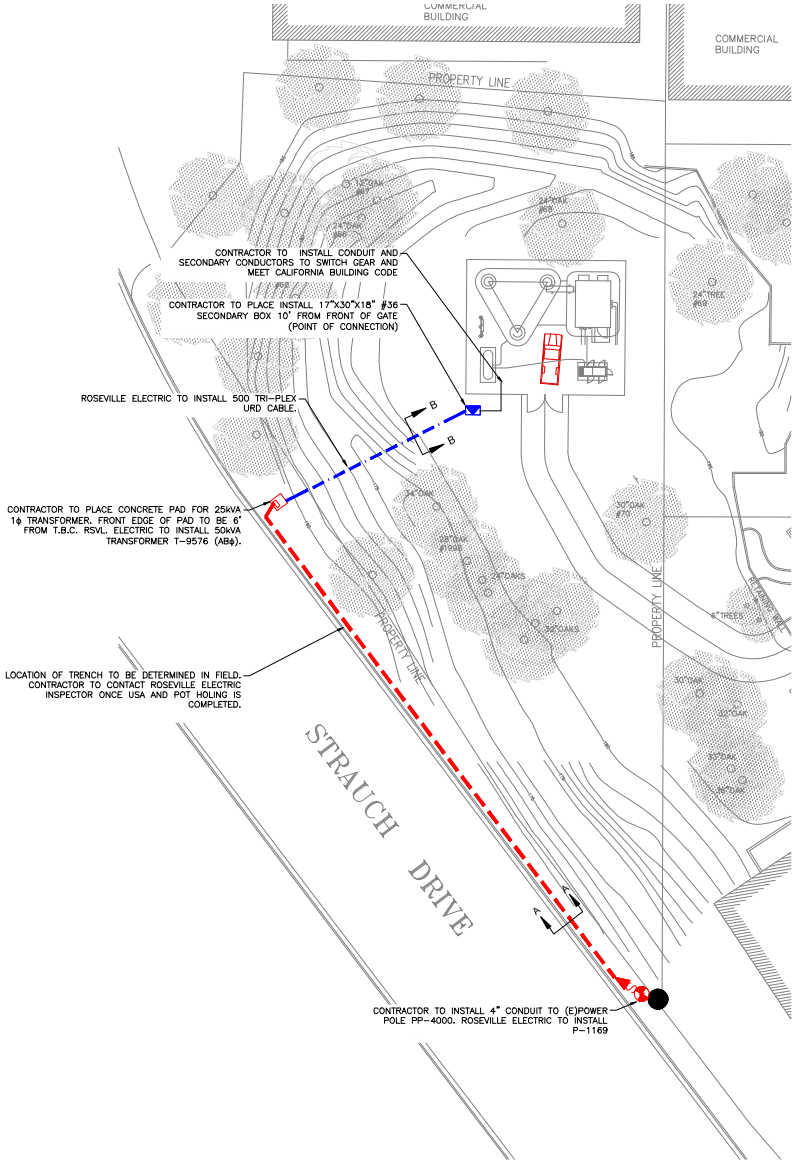

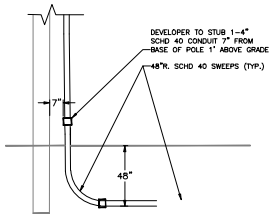

RISER DETAIL P-1169
N.T.S

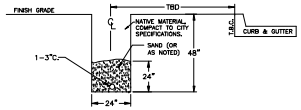

TRENCH DETAIL A-A
N.T.S

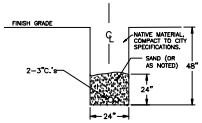

TRENCH DETAIL B-B
N.T.S

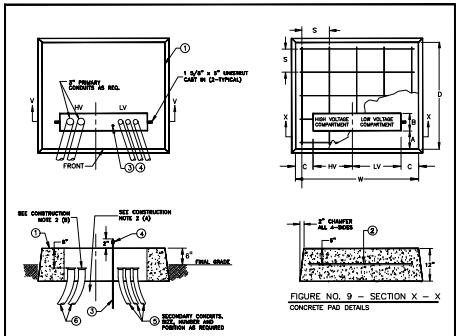

FIGURE NO. 8 – SECTION V – V
LOCATION FOR PRIMARY & SECONDARY CONDUITS

FIGURE NO. 9 – SECTION X – X
CONCRETE PAD DETAILS

ITEM	QUANTITY	DESCRIPTION
1	1	CONCRETE PAD
2	AS REQ.	REINFORCING STEEL, NO.4
* 3	1	GROUND ROD, 5/8" x 8'-0"
4	1	CLAMP, GROUND ROD, FOR ITEM 4
5	AS REQ.	CONDUIT, TYPE & SIZE AS REQUIRED FOR SECONDARY
6	AS REQ.	CONDUIT, PLASTIC 3" DIA. FOR PRIMARY

TABLE NO. 5 – TRANSFORMER PAD COMPONENTS

* FOR HARD SOIL CONDITIONS SEE CONST. NOTE 2 (H), PAGE 6.1

TRANSFORMER (KVA)	MAX. TRANS WEIGHT (LBS)	PAD DIMENSIONS (INCHES) A	B	C	D	HV	LV	W	S
25 – 167	2,500	8	14	9	54	12	17	48	12

TABLE NO. 6 – CONCRETE PAD DIMENSIONS

Roseville Electric
Reliable Energy • Dependable Service
(916) 774-5601

ELECTRIC SUPERINTENDENT	REVIEW COMMITTEE		
POWER ENG. MANAGER	DR. C. MAY	DATE 8-23-03	UNCHG.
ELECTRONIC SUPERINTENDENT	NEW SERVICES MANAGER	PAGE 6.4	

CONSTRUCTION STANDARD
PRE-CAST CONCRETE PAD FOR SINGLE PHASE 12kV PADMOUNTED TRANSFORMER – 167kVA AND BELOW

ONE LINE LEGEND

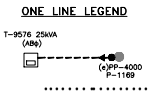

LEGEND:

- PADMOUNT 1ϕ TRANSFORMER 167kVA AND BELOW (48"X54")
- SEE CORRESPONDING TRENCH DETAIL
- 1-3"C W/2-#1/0 PRI. URD CABLE
- 1-3"C W/1-500 SECONDARY TRI-PLEX URD CABLE
- #36 SECONDARY BOX (17"WX30"LX18"D)

NOTES:

1. "ROSEVILLE ELECTRIC'S SPECIFICATIONS FOR COMMERCIAL CONSTRUCTION" ARE A PART OF THESE CONSTRUCTION PLANS FOR THIS DESIGN AND SHALL BE ADHERED TO UNLESS OTHERWISE DIRECTED BY SPECIFIC COMMENTS OR DETAILS IN THESE PLANS.
2. A MINIMUM SEPARATION OF 5' WHEN PARALLELING AND BY AT LEAST 6" WHEN CROSSING IS REQUIRED BETWEEN ELECTRIC AND OTHER SUBSTRUCTURES (WATER,SEWER, STORM DRAIN, ETC). THE CROSSING SEPARATION MAY BE REDUCED TO 3" WHEN ELECTRIC CONDUITS ARE CONCRETE ENCASED AND APPROVED BY THE ELECTRIC DEPARTMENT INSPECTOR.
3. A MINIMUM OF 5' WHEN PARALLELING AND 12" WHEN CROSSING PG&E GAS TRANSMISSION LINES.
4. A MINIMUM 12" SEPARATION BETWEEN ELECTRIC, TELEPHONE, GAS AND CABLE T.V. IS REQUIRED. THIS SEPARATION MAY NOT BE REDUCED UNLESS SPECIFICALLY APPROVED IN EACH INSTANCE BY THE UTILITIES INVOLVED.
5. THE CONTRACTOR TO PAY SPECIAL ATTENTION TO CROSSINGS WITH WATER MAINS, SANITARY SEWER, DRAIN PIPES, AND ANY OTHER OBSTRUCTIONS. CONTRACTOR TO PROVIDE THE MINIMUM REQUIRED COVER FOR ALL UTILITIES WITH A SMOOTH TRANSITION OVER OR UNDER OBSTRUCTION AS DIRECTED AND APPROVED BY ALL UTILITIES INVOLVED. THE APPROACH AND DEPARTURE FOR AN OBSTRUCTION SHALL BEGIN AND END 100 LINEAL FEET AWAY FROM THE OBSTRUCTION.
6. TRENCH DETAILS SHOWN ON THESE PLANS ARE FOR ELECTRIC. IF OTHER UTILITIES REQUEST JOINT TRENCH OCCUPATION, THE TRENCH DIMENSIONS MAY BE MODIFIED. IT IS THE DEVELOPERS RESPONSIBILITY TO CO-ORDINATE SUCH REQUESTS TO THE SATISFACTION OF ALL THE UTILITIES INVOLVED.
7. CONTRACTOR SHALL INSURE THAT ALL TRENCHING AND INSTALLATION OF ELECTRIC FACILITIES CONFORMS TO CAL. O.S.H.A. AND THE STATE OF CALIFORNIA P.U.C. GENERAL ORDER NO. 128 REQUIREMENTS.
8. THE CITY OF ROSEVILLE IS A MEMBER OF THE UNDERGROUND SERVICE ALERT SYSTEM, CALL BEFORE YOU DIG!! U.S.A PHONE #800-642-2444. ROSEVILLE ELECTRIC DISPATCH PHONE #916-774-5620.

REV	BY	DATE	DESCRIPTION	APPR.
1	JM	2/14/24	UPDATED PRIMARY CONDUIT TO 4", REVISED TRANSFORMER TO 50Kva	JM

CITY OF ROSEVILLE CALIFORNIA
ROSEVILLE ELECTRIC

TITLE	City of Roseville Communication Installation 2001 STRAUCH DRIVE	JOB NO.	000000
		ACCOUNT NO.	41011-6130
ENG. J McKinney	APPR.	SCALE: 1"=20''	DRAWING NO. 000-0000
DR. J McKinney		DATE:08/22/22	SHEET 1 OF 1

Special Inspections (SP-I)

CITY OF ROSEVILLE
CALIFORNIA

Development Services Department
Building Inspection Division
311 Vernon Street
Roseville, California 95678-2649
(916)774-5332 * Fax(916)774-5394

DATE
PROJECT TITLE
PROJECT ADDRESS

SPECIAL INSPECTION AND TESTING AGREEMENT

To applicants of projects requiring special inspection or testing as per Section 1704 of the **State of California Building Code,** please review the information below, acknowledge an understanding of the information by signing below, and return this form to the City.

BEFORE A PERMIT CAN BE ISSUED: The Project Engineer or Architect, shall complete, sign, and submit to this Department for review and approval the attached "Structural Tests and Inspection Schedule."

The Owner and General Contractor, where applicable, shall also acknowledge the following conditions applicable to Special Inspection and/or Testing.

1. Contractor is responsible for proper notification to the Inspecting or Testing Agency for items listed.
2. Testing laboratory only should take samples and transport them to their laboratory.
3. Copies of all laboratory reports and inspections are to be sent directly to the City by the Testing Agency.
4. Inspection Agency to submit names and qualifications of on-site Special Inspectors to the City for approval.
5. Special Inspectors shall provide appropriate reports to this department of all inspection activity.
6. It is the responsibility of the Contractor to review City approved plans for additional inspection or testing requirements that may be noted.
7. BEFORE A CERTIFICATE OF OCCUPANCY PERMIT CAN BE ISSUED: the Inspection Agency shall submit a statement that all items requiring testing and inspection have been fulfilled and reported. Those items not tested and/or inspected shall be noted in this statement. Copy of statement to be maintained at the job site for City's Building Inspector's review prior to final inspections.

ACKNOWLEDGMENTS

OWNER NAME (PRINTED)	OWNER SIGNATURE
GENERAL CONTRACTOR FIRM NAME (PRINTED)	GENERAL CONTRACTOR SIGNATURE
CONRAD L. ALFARO PROJECT ENGINEER OR ARCHITECT FIRM NAME (PRINTED)	PROJECT ENGINEER OR ARCHITECT SIGNATURE
SPECIAL INSPECTION AGENCY NAME (PRINTED)	SPECIAL INSPECTION AGENCY REP. SIGNATURE
TESTING LABORATORY NAME (PRINTED)	TESTING LABORATORY REP. SIGNATURE

SPECIAL INSPECTION AND TESTING SCHEDULE

PROJECT NAME

PROJECT ADDRESS

TESTING LABORATORY

INSPECTION AGENCY OR SPECIAL INSPECTOR

REINFORCED CONCRETE, GUNITE, GROUT AND MORTAR:

CONCRETE	GUNITE	GROUT	MORTAR	
				AGGREGATE TESTS FOR MIX DESIGN
				REINFORCING TEST
✓				MIX DESIGN-WEIGHMSTR CERT.*
✓				REINFORCING PLACEMENT
				CONTINUOUS BATCH PLANT INSP
				INSPECT PLACING
				CAST SAMPLES
				SAMPLES (PICKUP/DELIVERED)
✓				COMPRESSION TESTS*

PRECAST/PRE-STRESSED CONCRETE:

PILES	POST-TENS	PRE-TENS	CLADDING	
				AGGREGATE TESTS
				REINFORCING TESTS
				TENDON TEST
				MIX DESIGNS*
				REINFORCING PLACEMENT
				INSERT PLACEMENT
				CONCRETE BATCHING
				CONCRETE PLACEMENT
				INSTALLATION INSPECTION
				CASE SAMPLES
				PICK-UP SAMPLES
				COMPRESSION TESTS*

MASONRY:

_____ Special inspection stresses used *_____f'm_____f'g
_____ Preliminary acceptance tests (masonry units, wall prisms)
_____ Subsequent tests (mortar, grout, field wall prisms)
_____ Placement inspection of units
_____ Masonry, mortar, grout, and reinforcing steel certificates

PERIODIC TESTING:

_____ Reinforcing steel placement
_____ Pre-stressing tendons
_____ Welding of reinforcing steel
_____ Structural welding♦

POST INSTALLED ANCHORS:

✓ Observation of installation(select one)
_____ Periodic _____ Continuous
✓ Testing required
(Describe testing parameters below if required)

ADDITIONAL INSTRUCTIONS, OTHER TESTS, AND INSPECTIONS:

STRUCTURAL STEEL/WELDING

_____ Sample and test (list specific members below) ♦
_____ Shop material identification (mill cert.)
_____ Welding inspection ___shop ___field
_____ Ultrasonic inspection ___shop ___field
_____ High-strength bolting __shop ___field
A325_____N ___X ___F
A490_____N ___X ___F
_____ Metal deck welding inspection
_____ Reinforcing steel welding inspection
_____ Reinforcing steel mill certificate
_____ Metal stud welding inspection
_____ Concrete insert welding inspection
_____ Moment resisting steel frames

FIREPROOFING:

_____ Placement inspection
_____ Density tests
_____ Thickness tests
_____ Inspect batching

INSULATING CONCRETE:

_____ Sample and test
_____ Placement inspection
_____ Unit weights

SMOKE CONTROL:

_____ Leakage testing
_____ Control verification

FILL MATERIAL:

_____ Acceptance tests *_____PSF
_____ Placement inspection/continuous
_____ Field density

STRUCTURAL WOOD:

_____ Shear wall/diaphragm nailing inspection
_____ Shear wall/diaphragm anchors
_____ Inspection of Glu-lam fab. *_____T/C psi
_____ Inspection of truss joist fab.
_____ Sample and test components
_____ Fabrication welding of steel accessories

COPIES OF REPORTS TO:

_____ARCHITECT	_X_ INSPECTOR
_____ENGINEER	_X_ BUILDING OFFICIAL
_____CONTRACTOR	_____OWNER

♦ LIST OF STRUCTURAL STEEL MEMBERS TO BE INSPECTED

(IS THIS LIST CONTINUED ON AN ATTACHED SHEET? ☐ YES ☐ NO)

* PROVIDE STRENGTH REQUIRED BY ARCHITECT OR ENGINEER OR LOCATION OF VALUES IN CONTRACT DOCUMENT
♦ LIST SPECIFIC MEMBERS TO BE TESTED OR PERIODICALLY INSPECTED

Form completed by: CONRAD ALFARO Title: ENGINEER Telephone #: 510-406-5138 Date: 10/12/2023

Special Inspection and Testing Agreement
Revised 1/25/2019

Save As | Clear | Print

ORDINANCE NO. 6856

ORDINANCE OF THE COUNCIL OF THE CITY OF ROSEVILLE AUTHORIZING CERTAIN AMENDMENTS TO THE FISCAL YEAR 2024-25 BUDGET AND DECLARING THIS ORDINANCE TO BE IMMEDIATELY EFFECTIVE AS AN APPROPRIATION MEASURE

THE CITY OF ROSEVILLE ORDAINS:

SECTION 1. The City of Roseville Annual Budget, Fiscal Year 2024-25, is hereby amended as listed on the attached budget adjustment for the Citywide East Site Radio Communications project.

SECTION 2. This ordinance is hereby declared to be an appropriation measure, immediately effective pursuant to the provisions of Section 5.03 of the Charter.

SECTION 3. The City Clerk is hereby authorized and directed to post a true copy of the foregoing ordinance in each of three (3) conspicuous locations in the City and she shall immediately after such posting enter in the ordinance book, under the record of the ordinance, a certificate under her hand stating the time and place of such publication by posting.

PASSED AND ADOPTED by the Council of the City of Roseville, this _____day of_____, 2024, by the following vote on roll call:

AYES COUNCILMEMBERS:

NOES COUNCILMEMBERS:

ABSENT COUNCILMEMBERS:

_____
MAYOR

ATTEST:

_____
City Clerk

REQUEST FOR BUDGET ADJUSTMENT

Updated 5/24/2024

REQUESTER NAME & TITLE:	Karl Grover - IT Program Manager	FISCAL YEAR:	2024-25
PREPARER NAME & TITLE:	Austin Murray - IT Management Analyst	COUNCIL DATE (if applicable):	08/21/24
DEPARTMENT/DIVISION:	Information Technology / Network Solutions	ORDINANCE:	

EXPENDITURES/EXPENSES/TRANSFERS OUT

ACCOUNT STRING				BUDGET ($)	DESCRIPTION
Fund	Account	Center	Project	Adjustment	
4105	6587	84001	400126	825,502	Increase Budget to cover additional costs
1030	6587	84001	400126	462,092	Increase Budget to cover additional costs
EXPENDITURES/EXPENSES/TRANSFERS OUT TOTAL				1,287,594	

REVENUES/TRANSFERS IN

ACCOUNT STRING				BUDGET ($)	DESCRIPTION
Fund	Account	Center	Project	Adjustment	
REVENUES/TRANSFERS IN TOTAL				-	

NET ADJUSTMENT	1,287,594	

FUND BALANCE

ACCOUNT STRING				BUDGET ($)	DESCRIPTION
Fund	Account	Center	Project	Adjustment	
4105	3601	00000	000000	(825,502)	Decrease IT Replacement Fund Balance
1030	3601	00000	000000	(462,092)	Decrease Strategic Improvement Fund Balance
	3601	00000	000000		
	3601	00000	000000		
FUND BALANCE TOTAL				(1,287,594)	

Justification for Budget Adjustment:

This budget adjustment is needed to increase 400126 - East Radio Site Relocation project budget.

The project scope consists of site construction, tower, shelter, generator, propane tank, grounding, tree removal, bird survey, United Auburn Indian Council observation, City staff labor, fiber connectivity, power, cameras, lights, network equipment, spectrum analyzer, antenna systems, microwave dish link to the PD site, new radio equipment, system simulcast alignment, decommissioning of the old East radio site and a 15% contingency to ensure successful site construction and optimization.

The revised project budget will be $2,965,306 which is funded by: Fund 1030 - Strategic Improvement Funds - $1,497,000; 3355 - Public Facilities - $402,401 and 4105 - Information Technology Replacement - $1,065.905.

Adequate funds are available in the IT Replacement and Strategic Improvement Funds to cover this increase.

COUNCIL COMMUNICATION

CC #: 3503
File #: 0601-01

Title: Staffing Changes
Contact: Macy Dippert 916-774-5215 mdippert@roseville.ca.us

Meeting Date: 8/21/2024
Item #: 7.21.

RECOMMENDATION TO COUNCIL

As part of an ongoing assessment of the appropriate staffing structure to provide a high level of service to the community, staff recommends the following changes to the City's staffing allocation and salary schedules to meet business needs. It is recommended that City Council take the following actions:

1. Adopt an ordinance to approve the Temporary salary schedule (Appendix V) reflecting the reclassification of Aqua Fitness Instructor I/II (3745/3747) to Aqua Fitness Instructor (3747) effective August 24, 2024; and
2. Adopt an ordinance to approve the Management A & B salary schedules (Appendix E) reflecting the reclassification of Utility Billing Operations Manager (0920A/0920B) to Customer Care Manager (1150A/1150B) and Electric Customer Programs Supervisor (6285A/6285B) to Electric Customer Programs and Public Affairs Supervisor (1151A/1151B) classifications effective August 24, 2024; and
3. Motion to approve the attached city-wide allocation schedule effective August 24, 2024.

BACKGROUND

As part of the Municipal Code, the Human Resources Department maintains the City's classification plan. Human Resources staff continually evaluate organizational structure and staffing levels necessary to provide high service levels to the community. The recommended changes include the reclassification of one (1) temporary classification and two (2) management classifications reflected on the temporary and management salary schedules. The allocation schedule updates include the addition of one (1) full-time regular position, the reclassification of three (3) full-time regular positions and the deletion of one (1) full-time regular position, which are summarized and explained below:

Reclassification

Delete	Add	Salary Range Min. – Max.	Department	Bargaining Unit

Aqua Fitness Instructor I/II (3745/3747)	Aqua Fitness Instructor (3747)	$51.0000 (hourly)	Parks, Recreation, & Libraries	Temporary
Engineering Technician I/II (1350A/1350B)	Senior Engineering Technician (7162A/7162B)	$5,649.31 - $7,949.19	Environmental Utilities	Local 39
Utility Billing Operations Manager (0920A/0920B)	Customer Care Manager (1150A/1150B)	$9,442.20 to $12,653.45	Electric	Management
Electric Customer Programs Supervisor (6285A/6285B)	Electric Customer Programs and Public Affairs Supervisor (1151A/1151B)	$11,844.77 - $15,873.14	Electric	Management

Add

Position	Position Number	Department
Assistant/Associate Electric Analyst	ELE701067010	Electric

Delete

Position	Position Number	Department
Meter Reader	ELE704540003	Electric

Changes by Department:

Electric

After recent classification studies, staff recommends the reclassification of the Utility Billing Operations Manager to a new Customer Care Manager classification with the salary set fifteen percent (15%) above the Utility Billing and Field Services Supervisor. The reclassification and salary reduction will more accurately reflect the change in job duties due to the utility billing system technology work being moved under a different manager. Staff also recommends the Electric Customer Programs Supervisor be reclassified to Electric Customer Programs and Public Affairs Supervisor, to reflect the added duties of managing the public affairs team and customer outreach in the Electric Department. Staff recommends the same salary range, as there remains a 15 percent differential above the highest paid subordinate class.

Staff recommends adding one (1) regular Assistant/Associate Electric Analyst and deleting one (1) full-time, vacant, regular Meter Reader position. This new Assistant/Association Electric Analyst position will be split between the Customer Care divisions for Electric and Environmental Utilities. This position will support the Advanced Metering Infrastructure and provide analytical support, ensuring data quality, and foster continuous improvements.

Environmental Utilities

After a review of the assigned job duties, the classification consultant recommended that the Engineering Technician position be reclassified to the Senior Engineering Technician to reflect the

complexity and broader array of job duties assigned to the position.

Parks, Recreation, and Libraries (PR&L)

Staff recommends eliminating the levels classification for the Aqua Fitness Instructor I/II and having a single temporary classification titled Aqua Fitness Instructor. PR&L has had increasing difficulty recruiting and retaining employees at the level I. The industry standards are at a single level classification with the compensation being at the level II.

This request does not result in any additional costs as the classification hourly rate will be funded within the PR&L approved FY24-25 temporary salaries budget.

FISCAL IMPACT

The estimated total cost of the recommended position adjustments will be $41,999 for the remainder of FY2024-25, all of which can be absorbed into existing appropriations, so no budget adjustment is required at this time.

Beyond this fiscal year, the recommended changes have an annual ongoing impact of $51,999. The following table provides a summary of costs by fund and department:

Department	Fund	Remainder of FY2024-25	Ongoing
Electric	Electric Fund - 50% Water Operations Fund - 50%	$31,138	$74,559
Environmental Utilities	Water Operations Fund - 45% Wastewater Operations – 45% Waste Services – 10%	$10,861	$13,447
	Total	**$41,999**	**$51,999**

The following charts summarize the costs of the recommended position adjustments by department:

Electric

From	To	Current Salary & Benefits	Proposed Salary & Benefits	Annual Impact *	Impact for remaining FY 2024-25
Meter Reader	Assistant/Associate Electric Analyst	$102,327	$176,885	$74,559	$60,220
Utility Billing Operations Manager	Customer Care Manager	$271,461	$235,454	-$36,007	-$29,082
Electric Customer Programs Supervisor	Electric Customer Programs and Public Affairs Supervisor	$295,366	$295,366	$0	$0

			Total	**$38,552**	**$31,138**

*This amount includes the estimated annual pension cost of $2,696.73.

The cost for the remainder of FY2024-25 can be absorbed by existing appropriations.

Environmental Utilities

From	To	Current Salary & Benefits	Proposed Salary & Benefits	Annual Impact *	Impact for remaining FY 2024-25
Engineering Technician	Senior Engineering Technician	$134,471	$147,918	$13,447	$10,861

*This amount includes the estimated annual pension cost of $941.

This position reclassification was approved to be reviewed during the FY 2024-25 budget development process and the funds were included in the budget.

ENVIRONMENTAL REVIEW

The California Environmental Quality Act (CEQA) does not apply to activities that will not result in a direct or reasonably foreseeable indirect physical change in the environment or is otherwise not considered a project as defined by CEQA Statute §21065 and CEQA State Guidelines §15060(c)(3) and §15378. The proposed staffing changes meet the above criteria and are not subject to CEQA. No additional environmental review is required.

CITY COUNCIL STRATEGIC PLAN/OVERARCHING GOALS

Goal E - Deliver exceptional city services

Respectfully Submitted,

Macy Dippert, Human Resources Manager

Stacey Peterson, Human Resources Director

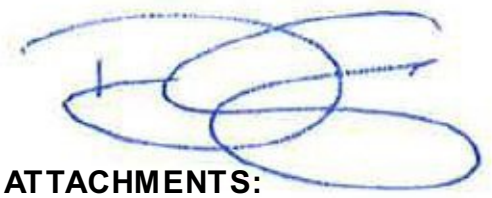

ATTACHMENTS:

Description

Ordinance 6854

Dominick Casey, City Manager

2024-08-24 Temporary Salary Schedule

Ordinance 6855

Management Schedule A 8-24-2024

Management Schedule B 8-24-2024

2024-08-24 Position Allocation Schedule

ORDINANCE NO. 6854

ORDINANCE OF THE COUNCIL OF THE CITY OF ROSEVILLE AMENDING ORDINANCE NO. 6840, THE SALARY ORDINANCE FOR SEASONAL/TEMPORARY EMPLOYEES, AS AMENDED BY APPENDIX "V" TO BE EFFECTIVE AUGUST 24, 2024, AS AN URGENCY MEASURE

THE CITY OF ROSEVILLE ORDAINS:

SECTION 1. Title and Purpose.

Ordinance No. 6840, the Salary Ordinance for Seasonal/Temporary Employees, is hereby amended as shown on Appendix "V" attached hereto.

AMENDMENT OF CLASSIFICATION

Classification No.	Position Title	Hourly Rate
3747	Aqua Fitness Instructor	$51.00

SECTION 2. Salary Plan Effective Date.

This Ordinance shall be effective August 24, 2024, as an urgency measure.

SECTION 3. Urgency Ordinance.

This ordinance is hereby declared to be an urgency measure, immediately necessary for the public peace, health and safety and shall take effect August 24, 2024. A statement of urgency is as follows:

It is necessary to amend the Salary Ordinance to comply with recently approved changes for the orderly and necessary continuance of operations of the City.

SECTION 4. Posting.

The City Clerk is hereby authorized and directed to post a true copy of the foregoing ordinance in each of three (3) conspicuous locations in the City and she shall immediately after such posting enter in the Ordinance Book under the record of the ordinance a certificate under her hand stating the time and place of said publication by posting.

PASSED AND ADOPTED by the Council of the City of Roseville this_____day of _____, 20___, by the following vote on roll call:

AYES COUNCILMEMBERS:

NOES COUNCILMEMBERS:

ABSENT COUNCILMEMBERS:

ATTEST: _____
MAYOR

_____
City Clerk

City of Roseville

Salary Schedule: Temporary--

Appendix:V
Effective Date:08/24/2024

TEMP Temporary

Grade Code	Grade Name	Step Name	Hourly
CI30	Activity Instructor	Step A	0.0000
3747	Aqua Fitness Instructor	Step A	51.0000
1100	Aquatics Facilities Maintenance Worker	Step A	18.5000
		Step B	18.9569
		Step C	19.4250
		Step D	19.9047
		Step E	20.3963
		Step F	20.8999
		Step G	21.4161
		Step H	21.9449
		Step I	22.4869

City of Roseville

Salary Schedule: Temporary--

Appendix:V
Effective Date:08/24/2024

TEMP Temporary

Grade Code	Grade Name	Step Name	Hourly
9503	Assistant Pool Manager I	Step A	20.2584
1077	Assistant Pool Manager II	Step A	21.2714

City of Roseville

Salary Schedule: Temporary--

Appendix:V
Effective Date:08/24/2024

TEMP Temporary

Grade Code	Grade Name	Step Name	Hourly
9505	Building Inspection Assistant	Step A	16.0000
		Step B	16.3951
		Step C	16.8000
		Step D	17.2149
		Step E	17.6400
		Step F	18.0756
		Step G	18.5220
		Step H	18.9794
		Step I	19.4481
9507	Child Care Aide	Step A	16.5375
		Step B	16.9459
		Step C	17.3644
		Step D	17.7932
		Step E	18.2326

City of Roseville

Salary Schedule: Temporary--

Appendix:V
Effective Date:08/24/2024

TEMP Temporary

Grade Code	Grade Name	Step Name	Hourly
9506	Child Care Program Assistant	Step A	19.9436
		Step B	20.4361
		Step C	20.9408
		Step D	21.4579
		Step E	21.9879
1010	Child Care Program Leader	Step A	23.9324
		Step B	24.5234
		Step C	25.1290
		Step D	25.7496
		Step E	26.3855

City of Roseville

Salary Schedule: Temporary--

Appendix:V
Effective Date:08/24/2024

TEMP Temporary

Grade Code	Grade Name	Step Name	Hourly
9508	Child Care Teacher	Step A	17.3644
		Step B	17.7932
		Step C	18.2326
		Step D	18.6829
		Step E	19.1442
CI10	Class Instructor	Step A	0.0000

City of Roseville

Salary Schedule: Temporary--

Appendix:V
Effective Date:08/24/2024

TEMP Temporary

Grade Code	Grade Name	Step Name	Hourly
1230	College Intern	Step A	16.0000
		Step B	16.8000
		Step C	17.6400
		Step D	18.5220
		Step E	19.4481
		Step F	20.4205
		Step G	21.4415
		Step H	22.5136
		Step I	23.6393
		Step J	24.8213
		Step K	26.0623
		Step L	27.3654
		Step M	28.7337
		Step N	30.1704
		Step O	31.6789

City of Roseville

Salary Schedule: Temporary--

Appendix:V
Effective Date:08/24/2024

TEMP Temporary

Grade Code	Grade Name	Step Name	Hourly
1127	Community Outreach Specialist	Step A	33.8978
		Step B	34.7349
		Step C	35.5926
		Step D	36.4716
		Step E	37.3723
		Step F	38.2952
		Step G	39.2409
		Step H	40.2100
		Step I	41.2029
1270	Council Member	Step A	600.0000 monthly stipend*

*Mayor receives an additional $50.00 per month

City of Roseville

Salary Schedule: Temporary--

Appendix:V
Effective Date:08/24/2024

TEMP Temporary

Grade Code	Grade Name	Step Name	Hourly
1137	Customer Service Specialist	Step A	17.5000
		Step B	18.0250
		Step C	18.5658
		Step D	19.1227
		Step E	19.6964
		Step F	20.2873
		Step G	20.8959
		Step H	21.5228
		Step I	22.1685
9509	Engineering Aide	Step A	16.0000
		Step B	16.3951
		Step C	16.8000
		Step D	17.2149
		Step E	17.6400
		Step F	18.0756
		Step G	18.5220
		Step H	18.9794
		Step I	19.4481

City of Roseville

Salary Schedule: Temporary--

Appendix:V
Effective Date:08/24/2024

TEMP Temporary

Grade Code	Grade Name	Step Name	Hourly
1020	Event Recreation Program Leader	Step A	22.5000
1014	Event Specialist I	Step A	19.0000
1015	Event Specialist II	Step A	20.0000
1016	Event Specialist III	Step A	21.0000

City of Roseville

Salary Schedule: Temporary--

Appendix:V
Effective Date:08/24/2024

TEMP Temporary

Grade Code	Grade Name	Step Name	Hourly
9510	Fire Equipment Specialist	Step A	16.5421
		Step B	16.8851
		Step C	17.3072
		Step D	17.7399
		Step E	18.1834
		Step F	18.6380
		Step G	19.1039
		Step H	19.5815
		Step I	20.0711
		Step J	20.5729
		Step K	21.0872
		Step L	21.6144
		Step M	22.1547
		Step N	22.7086
		Step O	23.2763

City of Roseville

Salary Schedule: Temporary--

Appendix:V
Effective Date:08/24/2024

TEMP Temporary

Grade Code	Grade Name	Step Name	Hourly
9511	Fire Logistics Worker	Step A	16.5421
		Step B	16.8851
		Step C	17.3072
		Step D	17.7399
		Step E	18.1834
		Step F	18.6380
		Step G	19.1039
		Step H	19.5815
		Step I	20.0711
		Step J	20.5729
		Step K	21.0872
		Step L	21.6144
		Step M	22.1547
		Step N	22.7086
		Step O	23.2763

City of Roseville

Salary Schedule: Temporary--

Appendix:V
Effective Date:08/24/2024

TEMP Temporary

Grade Code	Grade Name	Step Name	Hourly
9512	Fire Public Education Coordinator	Step A	20.5700
		Step B	21.3636
		Step C	21.8977
		Step D	22.4452
		Step E	23.0063
		Step F	23.5815
		Step G	24.1710
		Step H	24.7753
		Step I	25.3946
		Step J	26.0295
		Step K	26.6802
		Step L	27.3473
		Step M	28.0309
		Step N	28.7317
		Step O	29.4500
CI20	Fitness Instructor-Fee	Step A	0.0000

City of Roseville

Salary Schedule: Temporary--

Appendix:V
Effective Date:08/24/2024

TEMP Temporary

Grade Code	Grade Name	Step Name	Hourly
3735	Fitness Instructor-Hourly	Step A	30.0000
		Step B	31.0000
		Step C	32.0000
		Step D	33.0000
		Step E	34.0000
		Step F	35.0000
1145	High School Intern	Step A	18.0000
1079	Instructor Hourly	Step A	23.0000
		Step B	24.0000
		Step C	25.0000
		Step D	26.0000
		Step E	27.0000
		Step F	28.0000
		Step G	29.0000
		Step H	30.0000
		Step I	31.0000
3750	Instructor Meeting Rate	Step A	19.0000

City of Roseville

Salary Schedule: Temporary--

Appendix:V
Effective Date:08/24/2024

TEMP Temporary

Grade Code	Grade Name	Step Name	Hourly
9513	Interpretive Services Program Assistant	Step A	17.0000
		Step B	18.0000
		Step C	19.0000
		Step D	20.0000
9514	Interpretive Services Program Leader	Step A	19.5000
		Step B	20.5000
		Step C	21.5000
		Step D	22.5000

City of Roseville

Salary Schedule: Temporary--

Appendix:V
Effective Date:08/24/2024

TEMP Temporary

Grade Code	Grade Name	Step Name	Hourly
9515	Library Page	Step A	16.0000
		Step B	16.3951
		Step C	16.8000
		Step D	17.2149
		Step E	17.6400
		Step F	18.0756
		Step G	18.5220
		Step H	18.9794
		Step I	19.4481
1074	Lifeguard	Step A	17.5000

City of Roseville

Salary Schedule: Temporary--

Appendix:V
Effective Date:08/24/2024

TEMP Temporary

Grade Code	Grade Name	Step Name	Hourly
9518	Maintenance Assistant	Step A	16.0000
		Step B	16.3951
		Step C	16.8000
		Step D	17.2149
		Step E	17.6400
		Step F	18.0756
		Step G	18.5220
		Step H	18.9794
		Step I	19.4481
		Step J	19.9284
		Step K	20.4205
		Step L	20.9248
		Step M	21.4415
		Step N	21.9710
		Step O	22.5136

City of Roseville

Salary Schedule: Temporary--

Appendix:V
Effective Date:08/24/2024

TEMP Temporary

Grade Code	Grade Name	Step Name	Hourly
9519	Marketing Technician	Step A	20.8116
		Step B	21.3255
		Step C	21.8522
		Step D	22.3918
		Step E	22.9448
		Step F	23.5114
		Step G	24.0920
		Step H	24.6870
		Step I	25.2966
		Step J	25.9213
		Step K	26.5615
		Step L	27.2174
		Step M	27.8895
		Step N	28.5783
		Step O	29.2840

City of Roseville

Salary Schedule: Temporary--

Appendix:V
Effective Date:08/24/2024

TEMP Temporary

Grade Code	Grade Name	Step Name	Hourly
9521	Parks and Facility Maintenance Worker	Step A	18.5000
		Step B	18.9569
		Step C	19.4250
		Step D	19.9047
		Step E	20.3963
		Step F	20.8999
		Step G	21.4161
		Step H	21.9449
		Step I	22.4869
1011	Parks and Facility Maintenance Worker-Commercial Driver	Step A	19.4250
		Step B	19.9047
		Step C	20.3963
		Step D	20.8999
		Step E	21.4161
		Step F	21.9449
		Step G	22.4869
		Step H	23.0422
		Step I	23.6112

City of Roseville

Salary Schedule: Temporary--

Appendix:V
Effective Date:08/24/2024

TEMP Temporary

Grade Code	Grade Name	Step Name	Hourly
9523	Parks and Open Space Equipment Operator	Step A	24.2700
		Step B	24.8694
		Step C	25.4835
		Step D	26.1128
		Step E	26.7577
		Step F	27.4185
		Step G	28.0956
		Step H	28.7894
		Step I	29.5003
1012	Parks and Open Space Equipment Operator-Commerical Driver	Step A	25.4835
		Step B	26.1128
		Step C	26.7577
		Step D	27.4185
		Step E	28.0956
		Step F	28.7894
		Step G	29.5003
		Step H	30.2289
		Step I	30.9754

City of Roseville

Salary Schedule: Temporary--

Appendix:V
Effective Date:08/24/2024

TEMP Temporary

Grade Code	Grade Name	Step Name	Hourly
3749	Personal Trainer I	Step A	37.0000
1070	Personal Trainer II	Step A	40.0000
1071	Personal Trainer III	Step A	45.0000
1072	Personal Trainer IV	Step A	50.0000
9525	Police Cadet	Step A	23.4058
		Step B	24.5062
		Step C	25.2414
		Step D	25.9986
		Step E	26.7787
		Step F	27.5820
		Step G	28.4094
		Step H	29.2617
		Step I	30.1396
		Step J	31.0438
		Step K	31.9751
		Step L	32.9343

City of Roseville

Salary Schedule: Temporary--

Appendix:V
Effective Date:08/24/2024

TEMP Temporary

Grade Code	Grade Name	Step Name	Hourly
9527	Pool Manager I	Step A	22.3349
1078	Pool Manager II	Step A	23.4517

City of Roseville

Salary Schedule: Temporary--

Appendix:V
Effective Date:08/24/2024

TEMP Temporary

Grade Code	Grade Name	Step Name	Hourly
9528	Preschool Teacher	Step A	20.9408
		Step B	21.4579
		Step C	21.9879
		Step D	22.5308
		Step E	23.0872
6110	Recreation Aide	Step A	13.6000
		Step B	16.0000

City of Roseville

Salary Schedule: Temporary--

Appendix:V
Effective Date:08/24/2024

TEMP Temporary

Grade Code	Grade Name	Step Name	Hourly
9532	Recreation Program Leader	Step A	19.5000
		Step B	20.5000
		Step C	21.5000
		Step D	22.5000
9533	Recreation Specialist I	Step A	16.0000
		Step B	17.0000
		Step C	18.0000
		Step D	19.0000

City of Roseville

Salary Schedule: Temporary--

Appendix:V
Effective Date:08/24/2024

TEMP Temporary

Grade Code	Grade Name	Step Name	Hourly
9534	Recreation Specialist II	Step A	17.0000
		Step B	18.0000
		Step C	19.0000
		Step D	20.0000
9535	Recreation Specialist III	Step A	18.0000
		Step B	19.0000
		Step C	20.0000
		Step D	21.0000

City of Roseville

Salary Schedule: Temporary--

Appendix:V
Effective Date:08/24/2024

TEMP Temporary

Grade Code	Grade Name	Step Name	Hourly
6252	Reserve Police Officer I	Step A	40.9115
		Step B	42.1737
		Step C	43.4748
		Step D	44.8159
		Step E	46.2000
		Step F	47.6239
		Step G	49.0931
		Step H	50.6077
		Step I	52.1691
6250	Reserve Police Officer II (Unpaid)	Step A	0.0000
6248	Reserve Police Officer III (Unpaid)	Step A	0.0000

City of Roseville

Salary Schedule: Temporary--

Appendix:V
Effective Date:08/24/2024

TEMP Temporary

Grade Code	Grade Name	Step Name	Hourly
9536	School Crossing Guard	Step A	16.0000
		Step B	16.3951
		Step C	16.8000
		Step D	17.2149
		Step E	17.6400
		Step F	18.0756
		Step G	18.5220
		Step H	18.9794
		Step I	19.4481
9538	Senior Child Care Teacher	Step A	18.2326
		Step B	18.6828
		Step C	19.1442
		Step D	19.6170
		Step E	20.1014

City of Roseville

Salary Schedule: Temporary--

Appendix:V
Effective Date:08/24/2024

TEMP Temporary

Grade Code	Grade Name	Step Name	Hourly
1075	Senior Lifeguard I	Step A	18.3750
1076	Senior Lifeguard II	Step A	19.2938
9537	Senior School Crossing Guard	Step A	17.6000
		Step B	18.0346
		Step C	18.4800
		Step D	18.9364
		Step E	19.4040
		Step F	19.8832
		Step G	20.3742
		Step H	20.8773
		Step I	21.3929
7005	Soccer Official	Step A	65.0000
7207	Sports Official/Scorer I	Step A	18.0000
7208	Sports Official/Scorer II	Step A	20.0000
9552	Swim Instructor Aide	Step A	17.5000

City of Roseville

Salary Schedule: Temporary--

Appendix:V
Effective Date:08/24/2024

TEMP Temporary

Grade Code	Grade Name	Step Name	Hourly
9553	Swim Instructor I	Step A	18.5000
9554	Swim Instructor II	Step A	19.5000
1149	Therapeutic Recreation Program Leader	Step A	26.0000
		Step B	26.6421
		Step C	27.3000
		Step D	27.9742
		Step E	28.6650
		Step F	29.3729
		Step G	30.0983
		Step H	30.8416
		Step I	31.6032

City of Roseville

Salary Schedule: Temporary--

Appendix:V
Effective Date:08/24/2024

TEMP Temporary

Grade Code	Grade Name	Step Name	Hourly
9539	Video Technician	Step A	22.5676
		Step B	23.1250
		Step C	23.6962
		Step D	24.2815
		Step E	24.8813
		Step F	25.4958
		Step G	26.1256
		Step H	26.7709
		Step I	27.4321

City of Roseville

Salary Schedule: Temporary--

Appendix:V
Effective Date:08/24/2024

TEMP Temporary

Grade Code	Grade Name	Step Name	Hourly
8941	Vocational Intern	Step A	16.0000
		Step B	16.8000
		Step C	17.6400
		Step D	18.5220
		Step E	19.4481
		Step F	20.4205
		Step G	21.4415
		Step H	22.5136
		Step I	23.6393
		Step J	24.8213
		Step K	26.0623
		Step L	27.3654
		Step M	28.7337
		Step N	30.1704
		Step O	31.6789

City of Roseville

Salary Schedule: Temporary--

Appendix:V
Effective Date:08/24/2024

TEMP Temporary

Grade Code	Grade Name	Step Name	Hourly
9540	Water Conservation Helper	Step A	16.0000
		Step B	16.3952
		Step C	16.8002
		Step D	17.2151
		Step E	17.6403
		Step F	18.0761
		Step G	18.5225
		Step H	18.9800
		Step I	19.4488

ORDINANCE NO. 6855

ORDINANCE OF THE COUNCIL OF THE CITY OF ROSEVILLE AMENDING ORDINANCE NO. 6842, THE SALARY ORDINANCE FOR MANAGEMENT EMPLOYEES, AS AMENDED BY APPENDIX "E" TO BE EFFECTIVE AUGUST 24, 2024, AS AN URGENCY MEASURE

THE CITY OF ROSEVILLE ORDAINS:

SECTION 1. Title and Purpose.

Ordinance No. 6842, the Salary Ordinance for Management Employees, is hereby amended as shown on Appendix "E" for salary schedules A & B attached hereto.

AMENDMENT OF CLASSIFICATION

Classification No.	Position Title	Hourly Rate
1150A/1150B	Customer Care Manager	$73.00
1151A/1151B	Electric Customer Programs and Public Affairs Supervisor	$91.57

SECTION 2. Salary Plan Effective Date.

This Ordinance shall be effective August 24, 2024 as an urgency measure.

SECTION 3. Urgency Ordinance.

This ordinance is hereby declared to be an urgency measure, immediately necessary for the public peace, health and safety and shall take effect August 24, 2024. A statement of urgency is as follows:

It is necessary to amend the Salary Ordinance to comply with recently approved changes for the orderly and necessary continuance of operations of the City.

SECTION 4. Posting.

The City Clerk is hereby authorized and directed to post a true copy of the foregoing ordinance in each of three (3) conspicuous locations in the City and she shall immediately after such posting enter in the Ordinance Book under the record of the ordinance a certificate under her hand stating the time and place of said publication by posting.

PASSED AND ADOPTED by the Council of the City of Roseville this_____day of _____, 2024, by the following vote on roll call:

AYES COUNCILMEMBERS:

NOES COUNCILMEMBERS:

ABSENT COUNCILMEMBERS:

_____
MAYOR

ATTEST:

_____
City Clerk

City of Roseville

Salary Schedule: Management-A

Appendix:E
Effective Date:08/24/2024

MGMT Management

Grade Code	Grade Name	Step Name	Hourly	Bi-Weekly	Monthly	Annual
1505A	AMI Project Manager-A	Step A	54.7228	4377.82	9485.29	113823.42
		Step B	57.4590	4596.72	9959.56	119514.72
		Step C	60.3319	4826.55	10457.53	125490.35
		Step D	63.3486	5067.89	10980.42	131765.09
		Step E	66.5159	5321.27	11529.42	138353.07
		Step F	69.8416	5587.33	12105.88	145270.53
		Step G	73.3338	5866.70	12711.19	152534.30
1370A	Accounting Manager-A	Step A	62.8047	5024.38	10886.15	130633.78
		Step B	65.9450	5275.60	11430.47	137165.60
		Step C	69.2423	5539.38	12002.00	144023.98
		Step D	72.7043	5816.34	12602.08	151224.94
		Step E	76.3395	6107.16	13232.18	158786.16
		Step F	80.1566	6412.53	13893.81	166725.73
		Step G	84.1643	6733.14	14588.48	175061.74

City of Roseville

Salary Schedule: Management-A

Appendix:E
Effective Date:08/24/2024

MGMT Management

Grade Code	Grade Name	Step Name	Hourly	Bi-Weekly	Monthly	Annual
0043A	Accounting Supervisor-A	Step A	52.1047	4168.38	9031.48	108377.78
		Step B	54.7100	4376.80	9483.07	113796.80
		Step C	57.4455	4595.64	9957.22	119486.64
		Step D	60.3179	4825.43	10455.10	125461.23
		Step E	63.3337	5066.70	10977.84	131734.10
		Step F	66.5004	5320.03	11526.74	138320.83
		Step G	69.8254	5586.03	12103.07	145236.83
9427A	Accounts Payable Supervisor-A	Step A	49.6233	3969.86	8601.37	103216.46
		Step B	52.1044	4168.35	9031.43	108377.15
		Step C	54.7096	4376.77	9483.00	113795.97
		Step D	57.4450	4595.60	9957.13	119485.60
		Step E	60.3173	4825.38	10455.00	125459.98
		Step F	63.3332	5066.66	10977.75	131733.06
		Step G	66.4999	5319.99	11526.65	138319.79

City of Roseville

Salary Schedule: Management-A

Appendix:E
Effective Date:08/24/2024

MGMT Management

Grade Code	Grade Name	Step Name	Hourly	Bi-Weekly	Monthly	Annual
0090A	Alternative Transportation Manager-A	Step A	63.7302	5098.42	11046.57	132558.82
		Step B	66.9167	5353.34	11598.89	139186.74
		Step C	70.2625	5621.00	12178.83	146146.00
		Step D	73.7757	5902.06	12787.79	153453.46
		Step E	77.4645	6197.16	13427.18	161126.16
		Step F	81.3377	6507.02	14098.53	169182.42
		Step G	85.4044	6832.35	14803.43	177641.15
1017A	Assistant Building Official-A	Step A	48.1569	3852.55	8347.20	100166.35
		Step B	50.5648	4045.18	8764.57	105174.78
		Step C	53.0930	4247.44	9202.79	110433.44
		Step D	55.7476	4459.81	9662.92	115955.01
		Step E	58.5352	4682.82	10146.10	121753.22
		Step F	61.4620	4916.96	10653.41	127840.96
		Step G	64.5349	5162.79	11186.05	134232.59

City of Roseville

Salary Schedule: Management-A

Appendix:E
Effective Date:08/24/2024

MGMT Management

Grade Code	Grade Name	Step Name	Hourly	Bi-Weekly	Monthly	Annual
0245A	Assistant City Attorney-A	Step A	94.0641	7525.13	16304.44	195653.33
		Step B	98.7673	7901.38	17119.67	205435.98
		Step C	103.7056	8296.45	17975.64	215707.65
		Step D	108.8909	8711.27	18874.42	226493.07
		Step E	114.3354	9146.83	19818.14	237817.63
		Step F	120.0523	9604.18	20809.07	249708.78
		Step G	126.0548	10084.38	21849.50	262193.98
0250A	Assistant City Clerk-A	Step A	48.0029	3840.23	8320.50	99846.03
		Step B	50.4032	4032.26	8736.55	104838.66
		Step C	52.9234	4233.87	9173.39	110080.67
		Step D	55.5696	4445.57	9632.06	115584.77
		Step E	58.3481	4667.85	10113.67	121364.05
		Step F	61.2654	4901.23	10619.34	127432.03
		Step G	64.3287	5146.30	11150.31	133803.70

City of Roseville

Salary Schedule: Management-A

Appendix:E
Effective Date:08/24/2024

MGMT Management

Grade Code	Grade Name	Step Name	Hourly	Bi-Weekly	Monthly	Annual
0325A	Assistant City Manager-A	Step A	94.9999	7599.99	16466.65	197599.79
		Step B	99.7498	7979.98	17289.97	207479.58
		Step C	104.7374	8378.99	18154.48	217853.79
		Step D	109.9743	8797.94	19062.21	228746.54
		Step E	115.4730	9237.84	20015.32	240183.84
		Step F	121.2466	9699.73	21016.08	252192.93
		Step G	127.3089	10184.71	22066.88	264802.51
1021A	Assistant City Manager/Chief Financial Officer-A	Step A	94.9999	7599.99	16466.65	197599.79
		Step B	99.7498	7979.98	17289.97	207479.58
		Step C	104.7374	8378.99	18154.48	217853.79
		Step D	109.9743	8797.94	19062.21	228746.54
		Step E	115.4730	9237.84	20015.32	240183.84
		Step F	121.2466	9699.73	21016.08	252192.93
		Step G	127.3089	10184.71	22066.88	264802.51

City of Roseville

Salary Schedule: Management-A

Appendix:E
Effective Date:08/24/2024

MGMT Management

Grade Code	Grade Name	Step Name	Hourly	Bi-Weekly	Monthly	Annual
1068A	Assistant Electric Analyst-A	Step A	37.2034	2976.27	6448.59	77383.07
		Step B	39.0636	3125.09	6771.02	81252.29
		Step C	41.0167	3281.34	7109.56	85314.74
		Step D	43.0676	3445.41	7465.05	89580.61
		Step E	45.2210	3617.68	7838.31	94059.68
		Step F	47.4821	3798.57	8230.23	98762.77
		Step G	49.8562	3988.50	8641.74	103700.90
0395A	Assistant Electric Utility Director-A	Step A	112.4490	8995.92	19491.16	233893.92
		Step B	118.0716	9445.73	20465.74	245588.93
		Step C	123.9753	9918.02	21489.05	257868.62
		Step D	130.1739	10413.91	22563.48	270761.71
		Step E	136.6827	10934.62	23691.67	284300.02
		Step F	143.5168	11481.34	24876.25	298514.94
		Step G	150.6927	12055.42	26120.07	313440.82

City of Roseville

Salary Schedule: Management-A

Appendix:E
Effective Date:08/24/2024

MGMT Management

Grade Code	Grade Name	Step Name	Hourly	Bi-Weekly	Monthly	Annual
0411A	Assistant Environmental Utilities Director-A	Step A	76.8725	6149.80	13324.57	159894.80
		Step B	80.7161	6457.29	13990.79	167889.49
		Step C	84.7521	6780.17	14690.36	176284.37
		Step D	88.9894	7119.15	15424.83	185097.95
		Step E	93.4390	7475.12	16196.09	194353.12
		Step F	98.1110	7848.88	17005.91	204070.88
		Step G	103.0165	8241.32	17856.19	214274.32
1026A	Assistant Finance Director-A	Step A	72.2245	5777.96	12518.91	150226.96
		Step B	75.8356	6066.85	13144.84	157738.05
		Step C	79.6275	6370.20	13802.10	165625.20
		Step D	83.6089	6688.71	14492.21	173906.51
		Step E	87.7894	7023.15	15216.83	182601.95
		Step F	92.1789	7374.31	15977.68	191732.11
		Step G	96.7878	7743.02	16776.55	201318.62

City of Roseville

Salary Schedule: Management-A

Appendix:E
Effective Date:08/24/2024

MGMT Management

Grade Code	Grade Name	Step Name	Hourly	Bi-Weekly	Monthly	Annual
0480A	Assistant Fire Chief-A	Step A	74.4805	5958.44	12909.95	154919.44
		Step B	78.2044	6256.35	13555.43	162665.15
		Step C	82.1150	6569.20	14233.27	170799.20
		Step D	86.2206	6897.65	14944.90	179338.85
		Step E	90.5317	7242.54	15692.16	188305.94
		Step F	95.0582	7604.66	16476.75	197721.06
		Step G	99.8113	7984.90	17300.63	207607.50
0484A	Assistant Human Resources Director-A	Step A	65.1431	5211.45	11291.47	135497.65
		Step B	68.3997	5471.98	11855.95	142271.38
		Step C	71.8203	5745.62	12448.85	149386.22
		Step D	75.4113	6032.90	13071.29	156855.50
		Step E	79.1820	6334.56	13724.88	164698.56
		Step F	83.1410	6651.28	14411.11	172933.28
		Step G	87.2980	6983.84	15131.65	181579.84

City of Roseville

Salary Schedule: Management-A

Appendix:E
Effective Date:08/24/2024

MGMT Management

Grade Code	Grade Name	Step Name	Hourly	Bi-Weekly	Monthly	Annual
9558A	Assistant Information Technology Director-A	Step A	68.4017	5472.14	11856.29	142275.54
		Step B	71.8220	5745.76	12449.15	149389.76
		Step C	75.4130	6033.04	13071.59	156859.04
		Step D	79.1835	6334.68	13725.14	164701.68
		Step E	83.1430	6651.44	14411.45	172937.44
		Step F	87.2999	6983.99	15131.98	181583.79
		Step G	91.6649	7333.19	15888.58	190662.99
0510A	Assistant Police Chief-A	Step A	86.6885	6935.08	15026.01	180312.08
		Step B	91.0227	7281.82	15777.27	189327.22
		Step C	95.5741	7645.93	16566.18	198794.13
		Step D	100.3527	8028.22	17394.47	208733.62
		Step E	105.3704	8429.63	18264.20	219170.43
		Step F	110.6389	8851.11	19177.41	230128.91
		Step G	116.1709	9293.67	20136.29	241635.47

City of Roseville

Salary Schedule: Management-A

Appendix:E
Effective Date:08/24/2024

MGMT Management

Grade Code	Grade Name	Step Name	Hourly	Bi-Weekly	Monthly	Annual
1148A	Assistant Public Works Director-A	Step A	71.2520	5700.16	12350.35	148204.16
		Step B	74.8146	5985.17	12967.86	155614.37
		Step C	78.5554	6284.43	13616.27	163395.23
		Step D	82.4831	6598.65	14297.07	171564.85
		Step E	86.6073	6928.58	15011.93	180143.18
		Step F	90.9376	7275.01	15762.52	189150.21
		Step G	95.4845	7638.76	16550.65	198607.76
0086A	Assistant Transportation Planner-A	Step A	37.9473	3035.78	6577.53	78930.38
		Step B	39.8449	3187.59	6906.45	82877.39
		Step C	41.8370	3346.96	7251.75	87020.96
		Step D	43.9289	3514.31	7614.34	91372.11
		Step E	46.1251	3690.01	7995.02	95940.21
		Step F	48.4314	3874.51	8394.78	100737.31
		Step G	50.8531	4068.25	8814.54	105774.45

City of Roseville

Salary Schedule: Management-A

Appendix:E
Effective Date:08/24/2024

MGMT Management

Grade Code	Grade Name	Step Name	Hourly	Bi-Weekly	Monthly	Annual
1067A	Associate Electric Analyst-A	Step A	40.9237	3273.90	7093.44	85121.30
		Step B	42.9700	3437.60	7448.13	89377.60
		Step C	45.1184	3609.47	7820.52	93846.27
		Step D	47.3744	3789.95	8211.56	98538.75
		Step E	49.7432	3979.46	8622.15	103465.86
		Step F	52.2302	4178.42	9053.23	108638.82
		Step G	54.8418	4387.34	9505.91	114070.94
0088A	Associate Transportation Planner-A	Step A	41.7430	3339.44	7235.45	86825.44
		Step B	43.8300	3506.40	7597.20	91166.40
		Step C	46.0214	3681.71	7977.04	95724.51
		Step D	48.3227	3865.82	8375.93	100511.22
		Step E	50.7385	4059.08	8794.67	105536.08
		Step F	53.2756	4262.05	9234.44	110813.25
		Step G	55.9394	4475.15	9696.16	116353.95

City of Roseville

Salary Schedule: Management-A

Appendix:E
Effective Date:08/24/2024

MGMT Management

Grade Code	Grade Name	Step Name	Hourly	Bi-Weekly	Monthly	Annual
0910A	Budget Analyst I-A	Step A	39.8435	3187.48	6906.21	82874.48
		Step B	41.8355	3346.84	7251.49	87017.84
		Step C	43.9275	3514.20	7614.10	91369.20
		Step D	46.1239	3689.91	7994.81	95937.71
		Step E	48.4302	3874.42	8394.57	100734.82
		Step F	50.8515	4068.12	8814.26	105771.12
		Step G	53.3941	4271.53	9254.98	111059.73
0915A	Budget Analyst II-A	Step A	43.8288	3506.30	7596.99	91163.90
		Step B	46.0201	3681.61	7976.82	95721.81
		Step C	48.3214	3865.71	8375.71	100508.51
		Step D	50.7372	4058.98	8794.45	105533.38
		Step E	53.2742	4261.94	9234.19	110810.34
		Step F	55.9381	4475.05	9695.94	116351.25
		Step G	58.7349	4698.79	10180.72	122168.59

City of Roseville

Salary Schedule: Management-A

Appendix:E
Effective Date:08/24/2024

MGMT Management

Grade Code	Grade Name	Step Name	Hourly	Bi-Weekly	Monthly	Annual
0930A	Budget Manager-A	Step A	62.8047	5024.38	10886.15	130633.78
		Step B	65.9450	5275.60	11430.47	137165.60
		Step C	69.2423	5539.38	12002.00	144023.98
		Step D	72.7043	5816.34	12602.08	151224.94
		Step E	76.3395	6107.16	13232.18	158786.16
		Step F	80.1566	6412.53	13893.81	166725.73
		Step G	84.1643	6733.14	14588.48	175061.74
1043A	Building Official-A	Step A	63.1961	5055.69	10953.99	131447.89
		Step B	66.3558	5308.46	11501.67	138020.06
		Step C	69.6737	5573.90	12076.77	144921.30
		Step D	73.1573	5852.58	12680.60	152167.18
		Step E	76.8150	6145.20	13314.60	159775.20
		Step F	80.6558	6452.46	13980.34	167764.06
		Step G	84.6886	6775.09	14679.36	176152.29

City of Roseville

Salary Schedule: Management-A

Appendix:E
Effective Date:08/24/2024

MGMT Management

Grade Code	Grade Name	Step Name	Hourly	Bi-Weekly	Monthly	Annual
1141A	Building Plans Examiner Supervisor-A	Step A	47.2133	3777.06	8183.64	98203.66
		Step B	49.5740	3965.92	8592.83	103113.92
		Step C	52.0527	4164.22	9022.47	108269.62
		Step D	54.6553	4372.42	9473.59	113683.02
		Step E	57.3881	4591.05	9947.27	119367.25
		Step F	60.2575	4820.60	10444.63	125335.60
		Step G	63.2703	5061.62	10966.85	131602.22
1180A	Chief Information Officer-A	Step A	85.5023	6840.18	14820.40	177844.78
		Step B	89.7774	7182.19	15561.42	186736.99
		Step C	94.2664	7541.31	16339.51	196074.11
		Step D	98.9796	7918.37	17156.46	205877.57
		Step E	103.9285	8314.28	18014.27	216171.28
		Step F	109.1251	8730.01	18915.02	226980.21
		Step G	114.5814	9166.51	19860.78	238329.31

City of Roseville

Salary Schedule: Management-A

Appendix:E
Effective Date:08/24/2024

MGMT Management

Grade Code	Grade Name	Step Name	Hourly	Bi-Weekly	Monthly	Annual
1220A	City Clerk-A	Step A	70.6620	5652.96	12248.08	146976.96
		Step B	74.1951	5935.61	12860.48	154325.81
		Step C	77.9049	6232.39	13503.52	162042.19
		Step D	81.8002	6544.02	14178.70	170144.42
		Step E	85.8901	6871.21	14887.62	178651.41
		Step F	90.1847	7214.78	15632.01	187584.18
		Step G	94.6939	7575.51	16413.61	196963.31
1142A	City Librarian-A	Step A	54.6637	4373.10	9475.04	113700.50
		Step B	57.3969	4591.75	9948.80	119385.55
		Step C	60.2665	4821.32	10446.19	125354.32
		Step D	63.2803	5062.42	10968.59	131623.02
		Step E	66.4439	5315.51	11516.94	138203.31
		Step F	69.7664	5581.31	12092.84	145114.11
		Step G	73.2547	5860.38	12697.48	152369.78

City of Roseville

Salary Schedule: Management-A

Appendix:E
Effective Date:08/24/2024

MGMT Management

Grade Code	Grade Name	Step Name	Hourly	Bi-Weekly	Monthly	Annual
1368A	Code Enforcement Supervisor-A	Step A	43.7167	3497.34	7577.56	90930.74
		Step B	45.9025	3672.20	7956.43	95477.20
		Step C	48.1979	3855.83	8354.30	100251.63
		Step D	50.6077	4048.62	8772.00	105264.02
		Step E	53.1380	4251.04	9210.59	110527.04
		Step F	55.7948	4463.58	9671.10	116053.18
		Step G	58.5847	4686.78	10154.68	121856.18
1027A	Construction Inspection Superintendent-A	Step A	49.1955	3935.64	8527.22	102326.64
		Step B	51.6554	4132.43	8953.60	107443.23
		Step C	54.2382	4339.06	9401.29	112815.46
		Step D	56.9501	4556.01	9871.35	118456.21
		Step E	59.7975	4783.80	10364.90	124378.80
		Step F	62.7876	5023.01	10883.18	130598.21
		Step G	65.9269	5274.15	11427.33	137127.95

City of Roseville

Salary Schedule: Management-A

Appendix:E
Effective Date:08/24/2024

MGMT Management

Grade Code	Grade Name	Step Name	Hourly	Bi-Weekly	Monthly	Annual
3740A	Cultural Arts Supervisor-A	Step A	39.7899	3183.19	6896.92	82762.99
		Step B	41.7791	3342.33	7241.71	86900.53
		Step C	43.8682	3509.46	7603.82	91245.86
		Step D	46.0617	3684.94	7984.03	95808.34
		Step E	48.3647	3869.18	8383.21	100598.58
		Step F	50.7828	4062.62	8802.35	105628.22
		Step G	53.3220	4265.76	9242.48	110909.76
1025A	Custodian Supervisor-A	Step A	26.8003	2144.02	4645.39	55744.62
		Step B	28.1403	2251.22	4877.65	58531.82
		Step C	29.5473	2363.78	5121.53	61458.38
		Step D	31.0247	2481.98	5377.61	64531.38
		Step E	32.5759	2606.07	5646.49	67757.87
		Step F	34.2047	2736.38	5928.81	71145.78
		Step G	35.9149	2873.19	6225.25	74702.99

City of Roseville

Salary Schedule: Management-A

Appendix:E
Effective Date:08/24/2024

MGMT Management

Grade Code	Grade Name	Step Name	Hourly	Bi-Weekly	Monthly	Annual
1150A	Customer Care Manager-A	Step A	54.4742	4357.94	9442.19	113306.34
		Step B	57.1979	4575.83	9914.30	118971.63
		Step C	60.0578	4804.62	10410.02	124920.22
		Step D	63.0607	5044.86	10930.52	131166.26
		Step E	66.2138	5297.10	11477.06	137724.70
		Step F	69.5245	5561.96	12050.91	144610.96
		Step G	73.0007	5840.06	12653.45	151841.46
9561A	Data Management System Administrator-A	Step A	56.6346	4530.77	9816.66	117799.97
		Step B	59.4662	4757.30	10307.47	123689.70
		Step C	62.4397	4995.18	10822.88	129874.58
		Step D	65.5617	5244.94	11364.03	136368.34
		Step E	68.8398	5507.18	11932.23	143186.78
		Step F	72.2817	5782.54	12528.83	150345.94
		Step G	75.8960	6071.68	13155.31	157863.68

City of Roseville

Salary Schedule: Management-A

Appendix:E
Effective Date:08/24/2024

MGMT Management

Grade Code	Grade Name	Step Name	Hourly	Bi-Weekly	Monthly	Annual
1645A	Department Public Information Officer-A	Step A	49.5024	3960.19	8580.42	102964.99
		Step B	51.9778	4158.22	9009.49	108113.82
		Step C	54.5766	4366.13	9459.94	113519.33
		Step D	57.3054	4584.43	9932.94	119195.23
		Step E	60.1707	4813.66	10429.59	125155.06
		Step F	63.1793	5054.34	10951.08	131412.94
		Step G	66.3381	5307.05	11498.60	137983.25
1655A	Deputy City Attorney I-A	Step A	67.5992	5407.94	11717.19	140606.34
		Step B	70.9791	5678.33	12303.04	147636.53
		Step C	74.5280	5962.24	12918.19	155018.24
		Step D	78.2544	6260.35	13564.10	162769.15
		Step E	82.1673	6573.38	14242.33	170907.98
		Step F	86.2756	6902.05	14954.44	179453.25
		Step G	90.5893	7247.14	15702.15	188425.74

City of Roseville

Salary Schedule: Management-A

Appendix:E
Effective Date:08/24/2024

MGMT Management

Grade Code	Grade Name	Step Name	Hourly	Bi-Weekly	Monthly	Annual
1658A	Deputy City Attorney II-A	Step A	74.3591	5948.73	12888.91	154666.93
		Step B	78.0770	6246.16	13533.35	162400.16
		Step C	81.9809	6558.47	14210.02	170520.27
		Step D	86.0799	6886.39	14920.52	179046.19
		Step E	90.3839	7230.71	15666.54	187998.51
		Step F	94.9030	7592.24	16449.85	197398.24
		Step G	99.6483	7971.86	17272.37	207268.46
1659A	Deputy City Manager-A	Step A	77.7283	6218.26	13472.91	161674.86
		Step B	81.6147	6529.18	14146.55	169758.58
		Step C	85.6954	6855.63	14853.87	178246.43
		Step D	89.9802	7198.42	15596.57	187158.82
		Step E	94.4792	7558.34	16376.39	196516.74
		Step F	99.2032	7936.26	17195.22	206342.66
		Step G	104.1633	8333.06	18054.97	216659.66

City of Roseville

Salary Schedule: Management-A

Appendix:E
Effective Date:08/24/2024

MGMT Management

Grade Code	Grade Name	Step Name	Hourly	Bi-Weekly	Monthly	Annual
1280A	Development Services Administrator-A	Step A	52.2948	4183.58	9064.43	108773.18
		Step B	54.9095	4392.76	9517.65	114211.76
		Step C	57.6550	4612.40	9993.53	119922.40
		Step D	60.5376	4843.01	10493.18	125918.21
		Step E	63.5647	5085.18	11017.88	132214.58
		Step F	66.7431	5339.45	11568.80	138825.65
		Step G	70.0799	5606.39	12147.18	145766.19
1676A	Development Services Director-A	Step A	85.5025	6840.20	14820.43	177845.20
		Step B	89.7776	7182.21	15561.45	186737.41
		Step C	94.2665	7541.32	16339.53	196074.32
		Step D	98.9797	7918.38	17156.48	205877.78
		Step E	103.9289	8314.31	18014.34	216172.11
		Step F	109.1254	8730.03	18915.07	226980.83
		Step G	114.5814	9166.51	19860.78	238329.31

City of Roseville

Salary Schedule: Management-A

Appendix:E
Effective Date:08/24/2024

MGMT Management

Grade Code	Grade Name	Step Name	Hourly	Bi-Weekly	Monthly	Annual
1695A	Development Services Manager-A	Step A	62.2290	4978.32	10786.36	129436.32
		Step B	65.3403	5227.22	11325.65	135907.82
		Step C	68.6074	5488.59	11891.95	142703.39
		Step D	72.0378	5763.02	12486.55	149838.62
		Step E	75.6397	6051.18	13110.88	157330.58
		Step F	79.4219	6353.75	13766.46	165197.55
		Step G	83.3930	6671.44	14454.79	173457.44
2415A	EMS Quality Assurance Coordinator-A	Step A	55.5366	4442.93	9626.34	115516.13
		Step B	58.3133	4665.06	10107.64	121291.66
		Step C	61.2292	4898.34	10613.06	127356.74
		Step D	64.2908	5143.26	11143.74	133724.86
		Step E	67.5051	5400.41	11700.88	140410.61
		Step F	70.8805	5670.44	12285.95	147431.44
		Step G	74.4244	5953.95	12900.23	154802.75

City of Roseville

Salary Schedule: Management-A

Appendix:E
Effective Date:08/24/2024

MGMT Management

Grade Code	Grade Name	Step Name	Hourly	Bi-Weekly	Monthly	Annual
6520A	ERP Program Manager-A	Step A	54.7230	4377.84	9485.32	113823.84
		Step B	57.4589	4596.71	9959.54	119514.51
		Step C	60.3317	4826.54	10457.49	125489.94
		Step D	63.3484	5067.87	10980.39	131764.67
		Step E	66.5157	5321.26	11529.39	138352.66
		Step F	69.8416	5587.33	12105.88	145270.53
		Step G	73.3338	5866.70	12711.19	152534.30
1674A	Economic Development Analyst I-A	Step A	37.9480	3035.84	6577.65	78931.84
		Step B	39.8453	3187.62	6906.52	82878.22
		Step C	41.8374	3346.99	7251.82	87021.79
		Step D	43.9296	3514.37	7614.46	91373.57
		Step E	46.1260	3690.08	7995.17	95942.08
		Step F	48.4324	3874.59	8394.95	100739.39
		Step G	50.8539	4068.31	8814.68	105776.11

City of Roseville

Salary Schedule: Management-A

Appendix:E
Effective Date:08/24/2024

MGMT Management

Grade Code	Grade Name	Step Name	Hourly	Bi-Weekly	Monthly	Annual
1675A	Economic Development Analyst II-A	Step A	41.7430	3339.44	7235.45	86825.44
		Step B	43.8300	3506.40	7597.20	91166.40
		Step C	46.0214	3681.71	7977.04	95724.51
		Step D	48.3227	3865.82	8375.93	100511.22
		Step E	50.7385	4059.08	8794.67	105536.08
		Step F	53.2756	4262.05	9234.44	110813.25
		Step G	55.9394	4475.15	9696.16	116353.95
1710A	Economic Development Director-A	Step A	81.4337	6514.70	14115.17	169382.10
		Step B	85.5058	6840.46	14821.01	177852.06
		Step C	89.7809	7182.47	15562.02	186744.27
		Step D	94.2699	7541.59	16340.12	196081.39
		Step E	98.9834	7918.67	17157.12	205885.47
		Step F	103.9327	8314.62	18015.00	216180.02
		Step G	109.1292	8730.34	18915.73	226988.74

City of Roseville

Salary Schedule: Management-A

Appendix:E
Effective Date:08/24/2024

MGMT Management

Grade Code	Grade Name	Step Name	Hourly	Bi-Weekly	Monthly	Annual
1118A	Economic Development Manager-A	Step A	56.4726	4517.81	9788.58	117463.01
		Step B	59.2984	4743.87	10278.39	123340.67
		Step C	62.2636	4981.09	10792.36	129508.29
		Step D	65.3765	5230.12	11331.93	135983.12
		Step E	68.6452	5491.62	11898.50	142782.02
		Step F	72.0778	5766.22	12493.49	149921.82
		Step G	75.6814	6054.51	13118.11	157417.31
1001A	Economic Development Project Manager-A	Step A	52.3696	4189.57	9077.40	108928.77
		Step B	54.9880	4399.04	9531.25	114375.04
		Step C	57.7374	4618.99	10007.82	120093.79
		Step D	60.6242	4849.94	10508.19	126098.34
		Step E	63.6554	5092.43	11033.60	132403.23
		Step F	66.8383	5347.06	11585.31	139023.66
		Step G	70.1802	5614.42	12164.57	145974.82

City of Roseville

Salary Schedule: Management-A

Appendix:E
Effective Date:08/24/2024

MGMT Management

Grade Code	Grade Name	Step Name	Hourly	Bi-Weekly	Monthly	Annual
1310A	Electric Business Analyst I-A	Step A	49.1088	3928.70	8512.19	102146.30
		Step B	51.5643	4125.14	8937.81	107253.74
		Step C	54.1426	4331.41	9384.72	112616.61
		Step D	56.8496	4547.97	9853.93	118247.17
		Step E	59.6922	4775.38	10346.65	124159.78
		Step F	62.6768	5014.14	10863.98	130367.74
		Step G	65.8106	5264.85	11407.17	136886.05
1312A	Electric Business Analyst II-A	Step A	54.0194	4321.55	9363.36	112360.35
		Step B	56.7204	4537.63	9831.54	117978.43
		Step C	59.5563	4764.50	10323.09	123877.10
		Step D	62.5342	5002.74	10839.26	130071.14
		Step E	65.6609	5252.87	11381.22	136574.67
		Step F	68.9439	5515.51	11950.28	143403.31
		Step G	72.3911	5791.29	12547.79	150573.49

City of Roseville

Salary Schedule: Management-A

Appendix:E
Effective Date:08/24/2024

MGMT Management

Grade Code	Grade Name	Step Name	Hourly	Bi-Weekly	Monthly	Annual
1066A	Electric Compliance Analyst I-A	Step A	49.1085	3928.68	8512.14	102145.68
		Step B	51.5640	4125.12	8937.76	107253.12
		Step C	54.1423	4331.38	9384.67	112615.98
		Step D	56.8493	4547.94	9853.88	118246.54
		Step E	59.6917	4775.34	10346.56	124158.74
		Step F	62.6763	5014.10	10863.89	130366.70
		Step G	65.8102	5264.82	11407.10	136885.22
2335A	Electric Compliance Analyst II-A	Step A	54.0202	4321.62	9363.50	112362.02
		Step B	56.7213	4537.70	9831.69	117980.30
		Step C	59.5574	4764.59	10323.28	123879.39
		Step D	62.5351	5002.81	10839.42	130073.01
		Step E	65.6619	5252.95	11381.40	136576.75
		Step F	68.9450	5515.60	11950.47	143405.60
		Step G	72.3923	5791.38	12548.00	150575.98

City of Roseville

Salary Schedule: Management-A

Appendix:E
Effective Date:08/24/2024

MGMT Management

Grade Code	Grade Name	Step Name	Hourly	Bi-Weekly	Monthly	Annual
1151A	Electric Customer Programs and Public Affairs Supervisor-A	Step A	68.3352	5466.82	11844.77	142137.22
		Step B	71.7521	5740.17	12437.03	149244.37
		Step C	75.3397	6027.18	13058.88	156706.58
		Step D	79.1065	6328.52	13711.79	164541.52
		Step E	83.0618	6644.94	14397.38	172768.54
		Step F	87.2149	6977.19	15117.25	181406.99
		Step G	91.5758	7326.06	15873.14	190477.66
1117A	Electric Economic and Development Partnership Manager-A	Step A	75.1688	6013.50	13029.26	156351.10
		Step B	78.9272	6314.18	13680.71	164168.58
		Step C	82.8736	6629.89	14364.76	172377.09
		Step D	87.0173	6961.38	15083.00	180995.98
		Step E	91.3681	7309.45	15837.14	190045.65
		Step F	95.9366	7674.93	16629.01	199548.13
		Step G	100.7333	8058.66	17460.44	209525.26

City of Roseville

Salary Schedule: Management-A

Appendix:E
Effective Date:08/24/2024

MGMT Management

Grade Code	Grade Name	Step Name	Hourly	Bi-Weekly	Monthly	Annual
2284A	Electric Engineering Technician Supervisor-A	Step A	63.9585	5116.68	11086.14	133033.68
		Step B	67.1563	5372.50	11640.43	139685.10
		Step C	70.5141	5641.13	12222.44	146669.33
		Step D	74.0399	5923.19	12833.58	154002.99
		Step E	77.7417	6219.34	13475.23	161702.74
		Step F	81.6289	6530.31	14149.01	169788.11
		Step G	85.7104	6856.83	14856.47	178277.63
2338A	Electric Operations Manager-A	Step A	97.7818	7822.54	16948.85	203386.14
		Step B	102.6708	8213.66	17796.27	213555.26
		Step C	107.8043	8624.34	18686.08	224232.94
		Step D	113.1947	9055.58	19620.41	235444.98
		Step E	118.8545	9508.36	20601.45	247217.36
		Step F	124.7971	9983.77	21631.50	259577.97
		Step G	131.0368	10482.94	22713.05	272556.54

City of Roseville

Salary Schedule: Management-A

Appendix:E
Effective Date:08/24/2024

MGMT Management

Grade Code	Grade Name	Step Name	Hourly	Bi-Weekly	Monthly	Annual
2339A	Electric Operations Supervisor-A	Step A	88.8965	7111.72	15408.73	184904.72
		Step B	93.3415	7467.32	16179.19	194150.32
		Step C	98.0085	7840.68	16988.14	203857.68
		Step D	102.9087	8232.70	17837.51	214050.10
		Step E	108.0543	8644.34	18729.41	224752.94
		Step F	113.4571	9076.57	19665.90	235990.77
		Step G	119.1298	9530.38	20649.17	247789.98
2314A	Electric Resources Planner I-A	Step A	56.7179	4537.43	9831.10	117973.23
		Step B	59.5538	4764.30	10322.66	123871.90
		Step C	62.5315	5002.52	10838.79	130065.52
		Step D	65.6580	5252.64	11380.72	136568.64
		Step E	68.9410	5515.28	11949.77	143397.28
		Step F	72.3880	5791.04	12547.25	150567.04
		Step G	76.0075	6080.60	13174.63	158095.60

City of Roseville

Salary Schedule: Management-A

Appendix:E
Effective Date:08/24/2024

MGMT Management

Grade Code	Grade Name	Step Name	Hourly	Bi-Weekly	Monthly	Annual
2316A	Electric Resources Planner II-A	Step A	62.3896	4991.17	10814.20	129770.37
		Step B	65.5092	5240.74	11354.93	136259.14
		Step C	68.7845	5502.76	11922.65	143071.76
		Step D	72.2238	5777.90	12518.79	150225.50
		Step E	75.8350	6066.80	13144.73	157736.80
		Step F	79.6268	6370.14	13801.98	165623.74
		Step G	83.6083	6688.66	14492.11	173905.26
2216A	Electric Risk and Compliance Supervisor-A	Step A	68.3314	5466.51	11844.11	142129.31
		Step B	71.7479	5739.83	12436.30	149235.63
		Step C	75.3354	6026.83	13058.14	156697.63
		Step D	79.1020	6328.16	13711.01	164532.16
		Step E	83.0573	6644.58	14396.60	172759.18
		Step F	87.2101	6976.81	15116.42	181397.01
		Step G	91.5705	7325.64	15872.22	190466.64

City of Roseville

Salary Schedule: Management-A

Appendix:E
Effective Date:08/24/2024

MGMT Management

Grade Code	Grade Name	Step Name	Hourly	Bi-Weekly	Monthly	Annual
2352A	Electric Safety Coordinator-A	Step A	41.7429	3339.43	7235.44	86825.23
		Step B	43.8298	3506.38	7597.17	91165.98
		Step C	46.0213	3681.70	7977.03	95724.30
		Step D	48.3225	3865.80	8375.90	100510.80
		Step E	50.7384	4059.07	8794.66	105535.87
		Step F	53.2753	4262.02	9234.39	110812.62
		Step G	55.9394	4475.15	9696.16	116353.95
2319A	Electric Substation Supervisor-A	Step A	88.8965	7111.72	15408.73	184904.72
		Step B	93.3415	7467.32	16179.19	194150.32
		Step C	98.0085	7840.68	16988.14	203857.68
		Step D	102.9087	8232.70	17837.51	214050.10
		Step E	108.0543	8644.34	18729.41	224752.94
		Step F	113.4571	9076.57	19665.90	235990.77
		Step G	119.1298	9530.38	20649.17	247789.98

City of Roseville

Salary Schedule: Management-A

Appendix:E
Effective Date:08/24/2024

MGMT Management

Grade Code	Grade Name	Step Name	Hourly	Bi-Weekly	Monthly	Annual
9560A	Electric Technology Systems Administrator-A	Step A	68.3353	5466.82	11844.79	142137.42
		Step B	71.7521	5740.17	12437.03	149244.37
		Step C	75.3396	6027.17	13058.86	156706.37
		Step D	79.1065	6328.52	13711.79	164541.52
		Step E	83.0619	6644.95	14397.40	172768.75
		Step F	87.2151	6977.21	15117.28	181407.41
		Step G	91.5758	7326.06	15873.14	190477.66
1116A	Electric Utility Chief Operating Officer-A	Step A	123.6941	9895.53	21440.31	257283.73
		Step B	129.8789	10390.31	22512.34	270148.11
		Step C	136.3728	10909.82	23637.95	283655.42
		Step D	143.1915	11455.32	24819.86	297838.32
		Step E	150.3511	12028.09	26060.86	312730.29
		Step F	157.8686	12629.49	27363.89	328366.69
		Step G	165.7620	13260.96	28732.08	344784.96

City of Roseville

Salary Schedule: Management-A

Appendix:E
Effective Date:08/24/2024

MGMT Management

Grade Code	Grade Name	Step Name	Hourly	Bi-Weekly	Monthly	Annual
2320A	Electric Utility Director-A	Step A	140.5631	11245.05	24364.27	292371.25
		Step B	147.5913	11807.30	25582.49	306989.90
		Step C	154.9710	12397.68	26861.64	322339.68
		Step D	162.7195	13017.56	28204.71	338456.56
		Step E	170.8555	13668.44	29614.95	355379.44
		Step F	179.3982	14351.86	31095.69	373148.26
		Step G	188.3681	15069.45	32650.47	391805.65
2215A	Electric Utility Financial Administrator-A	Step A	68.3348	5466.78	11844.70	142136.38
		Step B	71.7514	5740.11	12436.91	149242.91
		Step C	75.3390	6027.12	13058.76	156705.12
		Step D	79.1059	6328.47	13711.69	164540.27
		Step E	83.0613	6644.90	14397.29	172767.50
		Step F	87.2143	6977.14	15117.15	181405.74
		Step G	91.5752	7326.02	15873.03	190476.42

City of Roseville

Salary Schedule: Management-A

Appendix:E
Effective Date:08/24/2024

MGMT Management

Grade Code	Grade Name	Step Name	Hourly	Bi-Weekly	Monthly	Annual
2378A	Electronic Maintenance Coordinator-A	Step A	46.0454	3683.63	7981.20	95774.43
		Step B	48.3477	3867.82	8380.27	100563.22
		Step C	50.7651	4061.21	8799.28	105591.41
		Step D	53.3033	4264.26	9239.24	110870.86
		Step E	55.9684	4477.47	9701.19	116414.27
		Step F	58.7668	4701.34	10186.25	122234.94
		Step G	61.7051	4936.41	10695.55	128346.61
2500A	Energy Services Account Representative I-A	Step A	48.9290	3914.32	8481.03	101772.32
		Step B	51.3755	4110.04	8905.09	106861.04
		Step C	53.9442	4315.54	9350.33	112203.94
		Step D	56.6414	4531.31	9817.84	117814.11
		Step E	59.4736	4757.89	10308.76	123705.09
		Step F	62.4472	4995.78	10824.18	129890.18
		Step G	65.5695	5245.56	11365.38	136384.56

City of Roseville

Salary Schedule: Management-A

Appendix:E
Effective Date:08/24/2024

MGMT Management

Grade Code	Grade Name	Step Name	Hourly	Bi-Weekly	Monthly	Annual
2501A	Energy Services Account Representative II-A	Step A	53.8220	4305.76	9329.15	111949.76
		Step B	56.5131	4521.05	9795.60	117547.25
		Step C	59.3387	4747.10	10285.37	123424.50
		Step D	62.3057	4984.46	10799.65	129595.86
		Step E	65.4211	5233.69	11339.66	136075.89
		Step F	68.6921	5495.37	11906.63	142879.57
		Step G	72.1267	5770.14	12501.96	150023.54
1277A	Engineering Manager-A	Step A	66.8492	5347.94	11587.19	139046.34
		Step B	70.1917	5615.34	12166.56	145998.74
		Step C	73.7007	5896.06	12774.79	153297.46
		Step D	77.3861	6190.89	13413.59	160963.09
		Step E	81.2552	6500.42	14084.23	169010.82
		Step F	85.3178	6825.42	14788.42	177461.02
		Step G	89.5838	7166.70	15527.86	186334.30

City of Roseville

Salary Schedule: Management-A

Appendix:E
Effective Date:08/24/2024

MGMT Management

Grade Code	Grade Name	Step Name	Hourly	Bi-Weekly	Monthly	Annual
2540A	Environmental Coordinator-A	Step A	48.0045	3840.36	8320.78	99849.36
		Step B	50.4047	4032.38	8736.81	104841.78
		Step C	52.9251	4234.01	9173.68	110084.21
		Step D	55.5712	4445.70	9632.34	115588.10
		Step E	58.3499	4667.99	10113.98	121367.79
		Step F	61.2671	4901.37	10619.63	127435.57
		Step G	64.3306	5146.45	11150.64	133807.65
2546A	Environmental Utilities Business Analyst I-A	Step A	39.8435	3187.48	6906.21	82874.48
		Step B	41.8356	3346.85	7251.50	87018.05
		Step C	43.9275	3514.20	7614.10	91369.20
		Step D	46.1238	3689.90	7994.79	95937.50
		Step E	48.4301	3874.41	8394.55	100734.61
		Step F	50.8516	4068.13	8814.28	105771.33
		Step G	53.3941	4271.53	9254.98	111059.73

City of Roseville

Salary Schedule: Management-A

Appendix:E
Effective Date:08/24/2024

MGMT Management

Grade Code	Grade Name	Step Name	Hourly	Bi-Weekly	Monthly	Annual
2547A	Environmental Utilities Business Analyst II-A	Step A	43.8288	3506.30	7596.99	91163.90
		Step B	46.0203	3681.62	7976.85	95722.22
		Step C	48.3214	3865.71	8375.71	100508.51
		Step D	50.7372	4058.98	8794.45	105533.38
		Step E	53.2742	4261.94	9234.19	110810.34
		Step F	55.9381	4475.05	9695.94	116351.25
		Step G	58.7349	4698.79	10180.72	122168.59
1122A	Environmental Utilities Business Services Manager-A	Step A	63.6319	5090.55	11029.53	132354.35
		Step B	66.8136	5345.09	11581.02	138972.29
		Step C	70.1543	5612.34	12160.08	145920.94
		Step D	73.6619	5892.95	12768.06	153216.75
		Step E	77.3450	6187.60	13406.47	160877.60
		Step F	81.2123	6496.98	14076.80	168921.58
		Step G	85.2729	6821.83	14780.64	177367.63

City of Roseville

Salary Schedule: Management-A

Appendix:E
Effective Date:08/24/2024

MGMT Management

Grade Code	Grade Name	Step Name	Hourly	Bi-Weekly	Monthly	Annual
2541A	Environmental Utilities Compliance Administrator-A	Step A	50.0900	4007.20	8682.27	104187.20
		Step B	52.5944	4207.55	9116.36	109396.35
		Step C	55.2241	4417.93	9572.18	114866.13
		Step D	57.9854	4638.83	10050.80	120609.63
		Step E	60.8845	4870.76	10553.31	126639.76
		Step F	63.9288	5114.30	11080.99	132971.90
		Step G	67.1251	5370.01	11635.02	139620.21
1684A	Environmental Utilities Director-A	Step A	96.0927	7687.42	16656.07	199872.82
		Step B	100.8972	8071.78	17488.85	209866.18
		Step C	105.9422	8475.38	18363.31	220359.78
		Step D	111.2392	8899.14	19281.46	231377.54
		Step E	116.8012	9344.10	20245.54	242946.50
		Step F	122.6413	9811.30	21257.83	255093.90
		Step G	128.7732	10301.86	22320.69	267848.26

City of Roseville

Salary Schedule: Management-A

Appendix:E
Effective Date:08/24/2024

MGMT Management

Grade Code	Grade Name	Step Name	Hourly	Bi-Weekly	Monthly	Annual
1024A	Environmental Utilities Maintenance Superintendent-A	Step A	59.5303	4762.42	10318.59	123823.02
		Step B	62.5067	5000.54	10834.49	130013.94
		Step C	65.6320	5250.56	11376.21	136514.56
		Step D	68.9136	5513.09	11945.02	143340.29
		Step E	72.3593	5788.74	12542.28	150507.34
		Step F	75.9773	6078.18	13169.40	158032.78
		Step G	79.7761	6382.09	13827.86	165934.29
1147A	Environmental Utilities Operations Superintendent-A	Step A	57.1887	4575.10	9912.71	118952.50
		Step B	60.0481	4803.85	10408.34	124900.05
		Step C	63.0505	5044.04	10928.75	131145.04
		Step D	66.2030	5296.24	11475.19	137702.24
		Step E	69.5132	5561.06	12048.95	144587.46
		Step F	72.9888	5839.10	12651.39	151816.70
		Step G	76.6383	6131.06	13283.97	159407.66

City of Roseville

Salary Schedule: Management-A

Appendix:E
Effective Date:08/24/2024

MGMT Management

Grade Code	Grade Name	Step Name	Hourly	Bi-Weekly	Monthly	Annual
4321A	Facilities Supervisor-A	Step A	40.2709	3221.67	6980.29	83763.47
		Step B	42.2846	3382.77	7329.33	87951.97
		Step C	44.3986	3551.89	7695.76	92349.09
		Step D	46.6186	3729.49	8080.56	96966.69
		Step E	48.9496	3915.97	8484.60	101815.17
		Step F	51.3970	4111.76	8908.81	106905.76
		Step G	53.9669	4317.35	9354.26	112251.15
2900A	Finance Manager-A	Step A	62.8047	5024.38	10886.15	130633.78
		Step B	65.9450	5275.60	11430.47	137165.60
		Step C	69.2423	5539.38	12002.00	144023.98
		Step D	72.7043	5816.34	12602.08	151224.94
		Step E	76.3395	6107.16	13232.18	158786.16
		Step F	80.1566	6412.53	13893.81	166725.73
		Step G	84.1643	6733.14	14588.48	175061.74

City of Roseville

Salary Schedule: Management-A

Appendix:E
Effective Date:08/24/2024

MGMT Management

Grade Code	Grade Name	Step Name	Hourly	Bi-Weekly	Monthly	Annual
0905ZA	Fire Battalion Chief 8Hr-ZA	Step A	61.5522	4924.18	10669.05	128028.58
		Step B	64.6298	5170.38	11202.50	134429.98
		Step C	67.8612	5428.90	11762.61	141151.30
		Step D	71.2543	5700.34	12350.75	148208.94
		Step E	74.8171	5985.37	12968.30	155619.57
		Step F	78.5579	6284.63	13616.70	163400.43
		Step G	82.4855	6598.84	14297.49	171569.84
0905A	Fire Battalion Chief-A	Step A	43.9657	4924.16	10669.01	128028.12
		Step B	46.1640	5170.37	11202.46	134429.57
		Step C	48.4723	5428.90	11762.61	141151.34
		Step D	50.8959	5700.34	12350.74	148208.86
		Step E	53.4407	5985.36	12968.28	155619.32
		Step F	56.1128	6284.63	13616.71	163400.47
		Step G	58.9184	6598.86	14297.53	171570.38

City of Roseville

Salary Schedule: Management-A

Appendix:E
Effective Date:08/24/2024

MGMT Management

Grade Code	Grade Name	Step Name	Hourly	Bi-Weekly	Monthly	Annual
3330A	Fire Chief-A	Step A	89.2835	7142.68	15475.81	185709.68
		Step B	93.7478	7499.82	16249.62	194995.42
		Step C	98.4349	7874.79	17062.05	204744.59
		Step D	103.3569	8268.55	17915.20	214982.35
		Step E	108.5247	8681.98	18810.95	225731.38
		Step F	113.9506	9116.05	19751.44	237017.25
		Step G	119.6482	9571.86	20739.02	248868.26
3332A	Fire Division Chief-A	Step A	67.7097	5416.78	11736.35	140836.18
		Step B	71.0950	5687.60	12323.13	147877.60
		Step C	74.6500	5972.00	12939.33	155272.00
		Step D	78.3824	6270.59	13586.28	163035.39
		Step E	82.3016	6584.13	14265.61	171187.33
		Step F	86.4165	6913.32	14978.86	179746.32
		Step G	90.7374	7258.99	15727.82	188733.79

City of Roseville

Salary Schedule: Management-A

Appendix:E
Effective Date:08/24/2024

MGMT Management

Grade Code	Grade Name	Step Name	Hourly	Bi-Weekly	Monthly	Annual
3332ZA	Fire Divison Chief 24Hr-ZA	Step A	48.3641	5416.78	11736.35	140836.26
		Step B	50.7823	5687.62	12323.17	147878.06
		Step C	53.3212	5971.97	12939.28	155271.33
		Step D	55.9873	6270.58	13586.25	163035.02
		Step E	58.7867	6584.11	14265.57	171186.87
		Step F	61.7260	6913.31	14978.84	179746.11
		Step G	64.8123	7258.98	15727.78	188733.42
2565A	Fleet Services Supervisor-A	Step A	40.0219	3201.75	6937.13	83245.55
		Step B	42.0229	3361.83	7283.97	87407.63
		Step C	44.1241	3529.93	7648.18	91778.13
		Step D	46.3304	3706.43	8030.60	96367.23
		Step E	48.6469	3891.75	8432.13	101185.55
		Step F	51.0792	4086.34	8853.73	106244.74
		Step G	53.6332	4290.66	9296.42	111557.06

City of Roseville

Salary Schedule: Management-A

Appendix:E
Effective Date:08/24/2024

MGMT Management

Grade Code	Grade Name	Step Name	Hourly	Bi-Weekly	Monthly	Annual
3451A	Government Relations Administrator-A	Step A	57.6027	4608.22	9984.47	119813.62
		Step B	60.4827	4838.62	10483.67	125804.02
		Step C	63.5069	5080.55	11007.86	132094.35
		Step D	66.6823	5334.58	11558.27	138699.18
		Step E	70.0164	5601.31	12136.18	145634.11
		Step F	73.5171	5881.37	12742.96	152915.57
		Step G	77.1930	6175.44	13380.12	160561.44
1647A	Government Relations Representative I-A	Step A	37.9480	3035.84	6577.65	78931.84
		Step B	39.8453	3187.62	6906.52	82878.22
		Step C	41.8374	3346.99	7251.82	87021.79
		Step D	43.9296	3514.37	7614.46	91373.57
		Step E	46.1260	3690.08	7995.17	95942.08
		Step F	48.4324	3874.59	8394.95	100739.39
		Step G	50.8539	4068.31	8814.68	105776.11

City of Roseville

Salary Schedule: Management-A

Appendix:E
Effective Date:08/24/2024

MGMT Management

Grade Code	Grade Name	Step Name	Hourly	Bi-Weekly	Monthly	Annual
1648A	Government Relations Representative II-A	Step A	41.7430	3339.44	7235.45	86825.44
		Step B	43.8300	3506.40	7597.20	91166.40
		Step C	46.0214	3681.71	7977.04	95724.51
		Step D	48.3227	3865.82	8375.93	100511.22
		Step E	50.7385	4059.08	8794.67	105536.08
		Step F	53.2756	4262.05	9234.44	110813.25
		Step G	55.9394	4475.15	9696.16	116353.95
3589A	Housing Manager-A	Step A	56.4726	4517.81	9788.58	117463.01
		Step B	59.2984	4743.87	10278.39	123340.67
		Step C	62.2636	4981.09	10792.36	129508.29
		Step D	65.3765	5230.12	11331.93	135983.12
		Step E	68.6452	5491.62	11898.50	142782.02
		Step F	72.0778	5766.22	12493.49	149921.82
		Step G	75.6814	6054.51	13118.11	157417.31

City of Roseville

Salary Schedule: Management-A

Appendix:E
Effective Date:08/24/2024

MGMT Management

Grade Code	Grade Name	Step Name	Hourly	Bi-Weekly	Monthly	Annual
3590A	Housing Supervisor-A	Step A	43.6423	3491.38	7564.67	90775.98
		Step B	45.8244	3665.95	7942.90	95314.75
		Step C	48.1155	3849.24	8340.02	100080.24
		Step D	50.5215	4041.72	8757.06	105084.72
		Step E	53.0472	4243.78	9194.85	110338.18
		Step F	55.6998	4455.98	9654.63	115855.58
		Step G	58.4848	4678.78	10137.37	121648.38
3594A	Human Resources Analyst I-A	Step A	38.9323	3114.58	6748.27	80979.18
		Step B	40.8789	3270.31	7085.68	85028.11
		Step C	42.9228	3433.82	7439.95	89279.42
		Step D	45.0691	3605.53	7811.98	93743.73
		Step E	47.3225	3785.80	8202.57	98430.80
		Step F	49.6885	3975.08	8612.67	103352.08
		Step G	52.1730	4173.84	9043.32	108519.84

City of Roseville

Salary Schedule: Management-A

Appendix:E
Effective Date:08/24/2024

MGMT Management

Grade Code	Grade Name	Step Name	Hourly	Bi-Weekly	Monthly	Annual
3596A	Human Resources Analyst II-A	Step A	42.8255	3426.04	7423.09	89077.04
		Step B	44.9667	3597.34	7794.23	93530.74
		Step C	47.2151	3777.21	8183.95	98207.41
		Step D	49.5759	3966.07	8593.16	103117.87
		Step E	52.0547	4164.38	9022.81	108273.78
		Step F	54.6573	4372.58	9473.93	113687.18
		Step G	57.3903	4591.22	9947.65	119371.82
3598A	Human Resources Director-A	Step A	81.4310	6514.48	14114.71	169376.48
		Step B	85.5026	6840.21	14820.45	177845.41
		Step C	89.7777	7182.22	15561.47	186737.62
		Step D	94.2665	7541.32	16339.53	196074.32
		Step E	98.9799	7918.39	17156.52	205878.19
		Step F	103.9290	8314.32	18014.36	216172.32
		Step G	109.1254	8730.03	18915.07	226980.83

City of Roseville

Salary Schedule: Management-A

Appendix:E
Effective Date:08/24/2024

MGMT Management

Grade Code	Grade Name	Step Name	Hourly	Bi-Weekly	Monthly	Annual
3599A	Human Resources Manager-A	Step A	54.1735	4333.88	9390.07	112680.88
		Step B	56.8821	4550.57	9859.56	118314.77
		Step C	59.7264	4778.11	10352.58	124230.91
		Step D	62.7127	5017.02	10870.20	130442.42
		Step E	65.8483	5267.86	11413.71	136964.46
		Step F	69.1409	5531.27	11984.42	143813.07
		Step G	72.5981	5807.85	12583.67	151004.05
1002A	Hydrogeologist-A	Step A	59.4196	4753.57	10299.40	123592.77
		Step B	62.3905	4991.24	10814.35	129772.24
		Step C	65.5101	5240.81	11355.08	136261.01
		Step D	68.7857	5502.86	11922.85	143074.26
		Step E	72.2250	5778.00	12519.00	150228.00
		Step F	75.8362	6066.90	13144.94	157739.30
		Step G	79.6278	6370.22	13802.15	165625.82

City of Roseville

Salary Schedule: Management-A

Appendix:E
Effective Date:08/24/2024

MGMT Management

Grade Code	Grade Name	Step Name	Hourly	Bi-Weekly	Monthly	Annual
3625A	Information Security Administrator-A	Step A	54.7221	4377.77	9485.16	113821.97
		Step B	57.4583	4596.66	9959.44	119513.26
		Step C	60.3311	4826.49	10457.39	125488.69
		Step D	63.3477	5067.82	10980.27	131763.22
		Step E	66.5151	5321.21	11529.28	138351.41
		Step F	69.8408	5587.26	12105.74	145268.86
		Step G	73.3330	5866.64	12711.05	152532.64
9542A	Information Technology Client Services Supervisor-A	Step A	47.7791	3822.33	8281.71	99380.53
		Step B	50.1681	4013.45	8695.80	104349.65
		Step C	52.6766	4214.13	9130.61	109567.33
		Step D	55.3103	4424.82	9587.12	115045.42
		Step E	58.0759	4646.07	10066.49	120797.87
		Step F	60.9796	4878.37	10569.80	126837.57
		Step G	64.0287	5122.30	11098.31	133179.70

City of Roseville

Salary Schedule: Management-A

Appendix:E
Effective Date:08/24/2024

MGMT Management

Grade Code	Grade Name	Step Name	Hourly	Bi-Weekly	Monthly	Annual
3602A	Information Technology Program Manager-A	Step A	54.7230	4377.84	9485.32	113823.84
		Step B	57.4589	4596.71	9959.54	119514.51
		Step C	60.3317	4826.54	10457.49	125489.94
		Step D	63.3484	5067.87	10980.39	131764.67
		Step E	66.5157	5321.26	11529.39	138352.66
		Step F	69.8416	5587.33	12105.88	145270.53
		Step G	73.3338	5866.70	12711.19	152534.30
1140A	Intelligent Transportation Systems Maintenance Supervisor-A	Step A	58.2457	4659.66	10095.92	121151.06
		Step B	61.1580	4892.64	10600.72	127208.64
		Step C	64.2159	5137.27	11130.76	133569.07
		Step D	67.4267	5394.14	11687.29	140247.54
		Step E	70.7981	5663.85	12271.67	147260.05
		Step F	74.3380	5947.04	12885.25	154623.04
		Step G	78.0549	6244.39	13529.52	162354.19

City of Roseville

Salary Schedule: Management-A

Appendix:E
Effective Date:08/24/2024

MGMT Management

Grade Code	Grade Name	Step Name	Hourly	Bi-Weekly	Monthly	Annual
3810A	Key Accounts Representative-A	Step A	59.2013	4736.10	10261.56	123138.70
		Step B	62.1615	4972.92	10774.66	129295.92
		Step C	65.2695	5221.56	11313.38	135760.56
		Step D	68.5330	5482.64	11879.05	142548.64
		Step E	71.9597	5756.78	12473.01	149676.18
		Step F	75.5577	6044.62	13096.67	157160.02
		Step G	79.3355	6346.84	13751.49	165017.84
9544A	Library Supervisor-A	Step A	38.0866	3046.93	6601.68	79220.13
		Step B	39.9907	3199.26	6931.72	83180.66
		Step C	41.9904	3359.23	7278.34	87340.03
		Step D	44.0899	3527.19	7642.25	91706.99
		Step E	46.2944	3703.55	8024.36	96292.35
		Step F	48.6090	3888.72	8425.56	101106.72
		Step G	51.0395	4083.16	8846.85	106162.16

City of Roseville

Salary Schedule: Management-A

Appendix:E
Effective Date:08/24/2024

MGMT Management

Grade Code	Grade Name	Step Name	Hourly	Bi-Weekly	Monthly	Annual
4449A	Management Analyst - City Manager Office-A	Step A	43.8300	3506.40	7597.20	91166.40
		Step B	46.0214	3681.71	7977.04	95724.51
		Step C	48.3227	3865.82	8375.93	100511.22
		Step D	50.7385	4059.08	8794.67	105536.08
		Step E	53.2756	4262.05	9234.44	110813.25
		Step F	55.9394	4475.15	9696.16	116353.95
		Step G	58.7362	4698.90	10180.94	122171.30
0045A	Management Analyst I-A	Step A	37.9480	3035.84	6577.65	78931.84
		Step B	39.8453	3187.62	6906.52	82878.22
		Step C	41.8374	3346.99	7251.82	87021.79
		Step D	43.9296	3514.37	7614.46	91373.57
		Step E	46.1260	3690.08	7995.17	95942.08
		Step F	48.4324	3874.59	8394.95	100739.39
		Step G	50.8539	4068.31	8814.68	105776.11

City of Roseville

Salary Schedule: Management-A

Appendix:E
Effective Date:08/24/2024

MGMT Management

Grade Code	Grade Name	Step Name	Hourly	Bi-Weekly	Monthly	Annual
0050A	Management Analyst II-A	Step A	41.7430	3339.44	7235.45	86825.44
		Step B	43.8300	3506.40	7597.20	91166.40
		Step C	46.0214	3681.71	7977.04	95724.51
		Step D	48.3227	3865.82	8375.93	100511.22
		Step E	50.7385	4059.08	8794.67	105536.08
		Step F	53.2756	4262.05	9234.44	110813.25
		Step G	55.9394	4475.15	9696.16	116353.95
5020A	Park Development Project Manager I-A	Step A	37.9480	3035.84	6577.65	78931.84
		Step B	39.8453	3187.62	6906.52	82878.22
		Step C	41.8374	3346.99	7251.82	87021.79
		Step D	43.9296	3514.37	7614.46	91373.57
		Step E	46.1260	3690.08	7995.17	95942.08
		Step F	48.4324	3874.59	8394.95	100739.39
		Step G	50.8539	4068.31	8814.68	105776.11

City of Roseville

Salary Schedule: Management-A

Appendix:E
Effective Date:08/24/2024

MGMT Management

Grade Code	Grade Name	Step Name	Hourly	Bi-Weekly	Monthly	Annual
5022A	Park Development Project Manager II-A	Step A	41.7430	3339.44	7235.45	86825.44
		Step B	43.8300	3506.40	7597.20	91166.40
		Step C	46.0214	3681.71	7977.04	95724.51
		Step D	48.3227	3865.82	8375.93	100511.22
		Step E	50.7385	4059.08	8794.67	105536.08
		Step F	53.2756	4262.05	9234.44	110813.25
		Step G	55.9394	4475.15	9696.16	116353.95
1106A	Park Planning and Development Manager-A	Step A	52.8062	4224.50	9153.07	109836.90
		Step B	55.4471	4435.77	9610.83	115329.97
		Step C	58.2196	4657.57	10091.40	121096.77
		Step D	61.1305	4890.44	10595.95	127151.44
		Step E	64.1870	5134.96	11125.75	133508.96
		Step F	67.3964	5391.71	11682.04	140184.51
		Step G	70.7662	5661.30	12266.14	147193.70

City of Roseville

Salary Schedule: Management-A

Appendix:E
Effective Date:08/24/2024

MGMT Management

Grade Code	Grade Name	Step Name	Hourly	Bi-Weekly	Monthly	Annual
5082A	Parks Recreation and Libraries Director-A	Step A	85.5031	6840.25	14820.54	177846.45
		Step B	89.7783	7182.26	15561.57	186738.86
		Step C	94.2670	7541.36	16339.61	196075.36
		Step D	98.9803	7918.42	17156.59	205879.02
		Step E	103.9295	8314.36	18014.45	216173.36
		Step F	109.1259	8730.07	18915.16	226981.87
		Step G	114.5823	9166.58	19860.93	238331.18
9547A	Parks Recreation and Libraries Manager-A	Step A	54.6637	4373.10	9475.04	113700.50
		Step B	57.3969	4591.75	9948.80	119385.55
		Step C	60.2665	4821.32	10446.19	125354.32
		Step D	63.2803	5062.42	10968.59	131623.02
		Step E	66.4439	5315.51	11516.94	138203.31
		Step F	69.7664	5581.31	12092.84	145114.11
		Step G	73.2547	5860.38	12697.48	152369.78

City of Roseville

Salary Schedule: Management-A

Appendix:E
Effective Date:08/24/2024

MGMT Management

Grade Code	Grade Name	Step Name	Hourly	Bi-Weekly	Monthly	Annual
9546A	Parks and Open Space Superintendent-A	Step A	45.9191	3673.53	7959.31	95511.73
		Step B	48.2151	3857.21	8357.28	100287.41
		Step C	50.6258	4050.06	8775.14	105301.66
		Step D	53.1570	4252.56	9213.88	110566.56
		Step E	55.8153	4465.22	9674.65	116095.82
		Step F	58.6058	4688.46	10158.34	121900.06
		Step G	61.5358	4922.86	10666.21	127994.46
5069A	Parks and Open Space Supervisor-A	Step A	38.0866	3046.93	6601.68	79220.13
		Step B	39.9907	3199.26	6931.72	83180.66
		Step C	41.9904	3359.23	7278.34	87340.03
		Step D	44.0899	3527.19	7642.25	91706.99
		Step E	46.2944	3703.55	8024.36	96292.35
		Step F	48.6090	3888.72	8425.56	101106.72
		Step G	51.0395	4083.16	8846.85	106162.16

City of Roseville

Salary Schedule: Management-A

Appendix:E
Effective Date:08/24/2024

MGMT Management

Grade Code	Grade Name	Step Name	Hourly	Bi-Weekly	Monthly	Annual
1124A	Payroll Analyst I-A	Step A	37.9480	3035.84	6577.65	78931.84
		Step B	39.8453	3187.62	6906.52	82878.22
		Step C	41.8374	3346.99	7251.82	87021.79
		Step D	43.9296	3514.37	7614.46	91373.57
		Step E	46.1260	3690.08	7995.17	95942.08
		Step F	48.4324	3874.59	8394.95	100739.39
		Step G	50.8539	4068.31	8814.68	105776.11
1125A	Payroll Analyst II-A	Step A	41.7430	3339.44	7235.45	86825.44
		Step B	43.8300	3506.40	7597.20	91166.40
		Step C	46.0214	3681.71	7977.04	95724.51
		Step D	48.3227	3865.82	8375.93	100511.22
		Step E	50.7385	4059.08	8794.67	105536.08
		Step F	53.2756	4262.05	9234.44	110813.25
		Step G	55.9394	4475.15	9696.16	116353.95

City of Roseville

Salary Schedule: Management-A

Appendix:E
Effective Date:08/24/2024

MGMT Management

Grade Code	Grade Name	Step Name	Hourly	Bi-Weekly	Monthly	Annual
9428A	Payroll Supervisor-A	Step A	49.6233	3969.86	8601.37	103216.46
		Step B	52.1044	4168.35	9031.43	108377.15
		Step C	54.7096	4376.77	9483.00	113795.97
		Step D	57.4450	4595.60	9957.13	119485.60
		Step E	60.3173	4825.38	10455.00	125459.98
		Step F	63.3332	5066.66	10977.75	131733.06
		Step G	66.4999	5319.99	11526.65	138319.79
1501A	Permits Supervisor-A	Step A	41.7430	3339.44	7235.45	86825.44
		Step B	43.8300	3506.40	7597.20	91166.40
		Step C	46.0214	3681.71	7977.04	95724.51
		Step D	48.3227	3865.82	8375.93	100511.22
		Step E	50.7385	4059.08	8794.67	105536.08
		Step F	53.2756	4262.05	9234.44	110813.25
		Step G	55.9394	4475.15	9696.16	116353.95

City of Roseville

Salary Schedule: Management-A

Appendix:E
Effective Date:08/24/2024

MGMT Management

Grade Code	Grade Name	Step Name	Hourly	Bi-Weekly	Monthly	Annual
5309A	Planning Manager-A	Step A	66.4534	5316.27	11518.59	138223.07
		Step B	69.7760	5582.08	12094.51	145134.08
		Step C	73.2649	5861.19	12699.25	152390.99
		Step D	76.9282	6154.26	13334.22	160010.66
		Step E	80.7747	6461.98	14000.95	168011.38
		Step F	84.8135	6785.08	14701.01	176412.08
		Step G	89.0539	7124.31	15436.01	185232.11
5400A	Police Captain-A	Step A	75.3795	6030.36	13065.78	156789.36
		Step B	79.1483	6331.86	13719.04	164628.46
		Step C	83.1058	6648.46	14405.01	172860.06
		Step D	87.2613	6980.90	15125.29	181503.50
		Step E	91.6243	7329.94	15881.55	190578.54
		Step F	96.2054	7696.43	16675.60	200107.23
		Step G	101.0157	8081.26	17509.39	210112.66

City of Roseville

Salary Schedule: Management-A

Appendix:E
Effective Date:08/24/2024

MGMT Management

Grade Code	Grade Name	Step Name	Hourly	Bi-Weekly	Monthly	Annual
5410A	Police Chief-A	Step A	98.5831	7886.65	17087.74	205052.85
		Step B	103.5124	8280.99	17942.15	215305.79
		Step C	108.6878	8695.02	18839.22	226070.62
		Step D	114.1224	9129.79	19781.22	237374.59
		Step E	119.8284	9586.27	20770.26	249243.07
		Step F	125.8200	10065.60	21808.80	261705.60
		Step G	132.1109	10568.87	22899.22	274790.67
5420A	Police Lieutenant-A	Step A	62.8195	5025.56	10888.71	130664.56
		Step B	65.9607	5276.86	11433.19	137198.26
		Step C	69.2586	5540.69	12004.82	144057.89
		Step D	72.7215	5817.72	12605.06	151260.72
		Step E	76.3577	6108.62	13235.33	158824.02
		Step F	80.1755	6414.04	13897.09	166765.04
		Step G	84.1844	6734.75	14591.96	175103.55

City of Roseville

Salary Schedule: Management-A

Appendix:E
Effective Date:08/24/2024

MGMT Management

Grade Code	Grade Name	Step Name	Hourly	Bi-Weekly	Monthly	Annual
5489A	Police Services Administrator-A	Step A	55.9340	4474.72	9695.23	116342.72
		Step B	58.7307	4698.46	10179.99	122159.86
		Step C	61.6672	4933.38	10688.98	128267.78
		Step D	64.7507	5180.06	11223.45	134681.46
		Step E	67.9882	5439.06	11784.62	141415.46
		Step F	71.3876	5711.01	12373.85	148486.21
		Step G	74.9570	5996.56	12992.55	155910.56
1138A	Police Social Services Practitioner I-A	Step A	35.3582	2828.66	6128.75	73545.06
		Step B	37.1261	2970.09	6435.19	77222.29
		Step C	38.9824	3118.59	6756.95	81083.39
		Step D	40.9315	3274.52	7094.79	85137.52
		Step E	42.9781	3438.25	7449.54	89394.45
		Step F	45.1270	3610.16	7822.01	93864.16
		Step G	47.3834	3790.67	8213.12	98557.47

City of Roseville

Salary Schedule: Management-A

Appendix:E
Effective Date:08/24/2024

MGMT Management

Grade Code	Grade Name	Step Name	Hourly	Bi-Weekly	Monthly	Annual
1139A	Police Social Services Practitioner II-A	Step A	38.8940	3111.52	6741.63	80899.52
		Step B	40.8387	3267.10	7078.71	84944.50
		Step C	42.8807	3430.46	7432.65	89191.86
		Step D	45.0247	3601.98	7804.28	93651.38
		Step E	47.2759	3782.07	8194.49	98333.87
		Step F	49.6397	3971.18	8604.21	103250.58
		Step G	52.1217	4169.74	9034.43	108413.14
1126A	Police Social Services Supervisor-A	Step A	44.7281	3578.25	7752.87	93034.45
		Step B	46.9645	3757.16	8140.51	97686.16
		Step C	49.3128	3945.02	8547.55	102570.62
		Step D	51.7784	4142.27	8974.92	107699.07
		Step E	54.3673	4349.38	9423.67	113083.98
		Step F	57.0857	4566.86	9894.85	118738.26
		Step G	59.9400	4795.20	10389.60	124675.20

City of Roseville

Salary Schedule: Management-A

Appendix:E
Effective Date:08/24/2024

MGMT Management

Grade Code	Grade Name	Step Name	Hourly	Bi-Weekly	Monthly	Annual
5505A	Power Engineering Manager-A	Step A	86.3391	6907.13	14965.44	179585.33
		Step B	90.6561	7252.49	15713.72	188564.69
		Step C	95.1889	7615.11	16499.41	197992.91
		Step D	99.9483	7995.86	17324.37	207892.46
		Step E	104.9458	8395.66	18190.61	218287.26
		Step F	110.1930	8815.44	19100.12	229201.44
		Step G	115.7026	9256.21	20055.12	240661.41
5600A	Power Generation Superintendent-A	Step A	86.8145	6945.16	15047.85	180574.16
		Step B	91.1552	7292.42	15800.23	189602.82
		Step C	95.7129	7657.03	16590.24	199082.83
		Step D	100.4986	8039.89	17419.76	209037.09
		Step E	105.5237	8441.90	18290.77	219489.30
		Step F	110.7998	8863.98	19205.30	230463.58
		Step G	116.3397	9307.18	20165.55	241986.58

City of Roseville

Salary Schedule: Management-A

Appendix:E
Effective Date:08/24/2024

MGMT Management

Grade Code	Grade Name	Step Name	Hourly	Bi-Weekly	Monthly	Annual
5530A	Power Plant Operations and Maintenance Supervisor-A	Step A	78.9232	6313.86	13680.02	164160.26
		Step B	82.8695	6629.56	14364.05	172368.56
		Step C	87.0129	6961.03	15082.24	180986.83
		Step D	91.3635	7309.08	15836.34	190036.08
		Step E	95.9318	7674.54	16628.18	199538.14
		Step F	100.7283	8058.26	17459.57	209514.86
		Step G	105.7648	8461.18	18332.57	219990.78
5535A	Power Supply and Portfolio Administrator-A	Step A	86.3352	6906.82	14964.77	179577.22
		Step B	90.6520	7252.16	15713.01	188556.16
		Step C	95.1846	7614.77	16498.66	197983.97
		Step D	99.9437	7995.50	17323.57	207882.90
		Step E	104.9410	8395.28	18189.77	218277.28
		Step F	110.1880	8815.04	19099.25	229191.04
		Step G	115.6974	9255.79	20054.22	240650.59

City of Roseville

Salary Schedule: Management-A

Appendix:E
Effective Date:08/24/2024

MGMT Management

Grade Code	Grade Name	Step Name	Hourly	Bi-Weekly	Monthly	Annual
5519A	Preventative Maintenance Supervisor-A	Step A	54.1184	4329.47	9380.52	112566.27
		Step B	56.8243	4545.94	9849.55	118194.54
		Step C	59.6656	4773.25	10342.04	124104.45
		Step D	62.6488	5011.90	10859.13	130309.50
		Step E	65.7813	5262.50	11402.09	136825.10
		Step F	69.0703	5525.62	11972.19	143666.22
		Step G	72.5238	5801.90	12570.79	150849.50
5514A	Principal Engineer-A	Step A	59.4196	4753.57	10299.40	123592.77
		Step B	62.3905	4991.24	10814.35	129772.24
		Step C	65.5101	5240.81	11355.08	136261.01
		Step D	68.7857	5502.86	11922.85	143074.26
		Step E	72.2250	5778.00	12519.00	150228.00
		Step F	75.8362	6066.90	13144.94	157739.30
		Step G	79.6278	6370.22	13802.15	165625.82

City of Roseville

Salary Schedule: Management-A

Appendix:E
Effective Date:08/24/2024

MGMT Management

Grade Code	Grade Name	Step Name	Hourly	Bi-Weekly	Monthly	Annual
5513A	Principal Planner-A	Step A	55.3792	4430.34	9599.06	115188.74
		Step B	58.1482	4651.86	10079.02	120948.26
		Step C	61.0556	4884.45	10582.97	126995.65
		Step D	64.1083	5128.66	11112.11	133345.26
		Step E	67.3138	5385.10	11667.73	140012.70
		Step F	70.6794	5654.35	12251.10	147013.15
		Step G	74.2135	5937.08	12863.67	154364.08
1114A	Principal Power Engineer-A	Step A	82.5816	6606.53	14314.14	171769.73
		Step B	86.7107	6936.86	15029.85	180358.26
		Step C	91.0462	7283.70	15781.34	189376.10
		Step D	95.5986	7647.89	16570.42	198845.09
		Step E	100.3785	8030.28	17398.94	208787.28
		Step F	105.3975	8431.80	18268.90	219226.80
		Step G	110.6673	8853.38	19182.33	230187.98

City of Roseville

Salary Schedule: Management-A

Appendix:E
Effective Date:08/24/2024

MGMT Management

Grade Code	Grade Name	Step Name	Hourly	Bi-Weekly	Monthly	Annual
1115A	Principal Power Plant Engineer-A	Step A	82.5816	6606.53	14314.14	171769.73
		Step B	86.7107	6936.86	15029.85	180358.26
		Step C	91.0462	7283.70	15781.34	189376.10
		Step D	95.5986	7647.89	16570.42	198845.09
		Step E	100.3785	8030.28	17398.94	208787.28
		Step F	105.3975	8431.80	18268.90	219226.80
		Step G	110.6673	8853.38	19182.33	230187.98
1004A	Process Engineer-A	Step A	59.4196	4753.57	10299.40	123592.77
		Step B	62.3905	4991.24	10814.35	129772.24
		Step C	65.5101	5240.81	11355.08	136261.01
		Step D	68.7857	5502.86	11922.85	143074.26
		Step E	72.2250	5778.00	12519.00	150228.00
		Step F	75.8362	6066.90	13144.94	157739.30
		Step G	79.6278	6370.22	13802.15	165625.82

City of Roseville

Salary Schedule: Management-A

Appendix:E
Effective Date:08/24/2024

MGMT Management

Grade Code	Grade Name	Step Name	Hourly	Bi-Weekly	Monthly	Annual
1069A	Project Supervisor-A	Step A	51.6694	4133.55	8956.03	107472.35
		Step B	54.2530	4340.24	9403.85	112846.24
		Step C	56.9656	4557.25	9874.04	118488.45
		Step D	59.8137	4785.10	10367.71	124412.50
		Step E	62.8045	5024.36	10886.11	130633.36
		Step F	65.9448	5275.58	11430.43	137165.18
		Step G	69.2420	5539.36	12001.95	144023.36
1108A	Public Affairs and Communications Manager-A	Step A	56.9260	4554.08	9867.17	118406.08
		Step B	59.7724	4781.79	10360.55	124326.59
		Step C	62.7609	5020.87	10878.56	130542.67
		Step D	65.8990	5271.92	11422.49	137069.92
		Step E	69.1939	5535.51	11993.61	143923.31
		Step F	72.6537	5812.30	12593.31	151119.70
		Step G	76.2864	6102.91	13222.98	158675.71

City of Roseville

Salary Schedule: Management-A

Appendix:E
Effective Date:08/24/2024

MGMT Management

Grade Code	Grade Name	Step Name	Hourly	Bi-Weekly	Monthly	Annual
5635A	Public Works Director-A	Step A	85.5045	6840.36	14820.78	177849.36
		Step B	89.7798	7182.38	15561.83	186741.98
		Step C	94.2689	7541.51	16339.94	196079.31
		Step D	98.9823	7918.58	17156.93	205883.18
		Step E	103.9314	8314.51	18014.78	216177.31
		Step F	109.1279	8730.23	18915.50	226986.03
		Step G	114.5843	9166.74	19861.28	238335.34
1087A	Public Works Manager-A	Step A	56.8363	4546.90	9851.63	118219.50
		Step B	59.6783	4774.26	10344.24	124130.86
		Step C	62.6621	5012.97	10861.43	130337.17
		Step D	65.7951	5263.61	11404.48	136853.81
		Step E	69.0850	5526.80	11974.73	143696.80
		Step F	72.5392	5803.14	12573.46	150881.54
		Step G	76.1663	6093.30	13202.16	158425.90

City of Roseville

Salary Schedule: Management-A

Appendix:E
Effective Date:08/24/2024

MGMT Management

Grade Code	Grade Name	Step Name	Hourly	Bi-Weekly	Monthly	Annual
1129A	Purchasing Supervisor-A	Step A	41.8409	3347.27	7252.42	87029.07
		Step B	43.9329	3514.63	7615.04	91380.43
		Step C	46.1296	3690.37	7995.80	95949.57
		Step D	48.4360	3874.88	8395.57	100746.88
		Step E	50.8579	4068.63	8815.37	105784.43
		Step F	53.4008	4272.06	9256.14	111073.66
		Step G	56.0708	4485.66	9718.94	116627.26
5652A	Purchasing and Warehouse Manager-A	Step A	54.1615	4332.92	9387.99	112655.92
		Step B	56.8696	4549.57	9857.40	118288.77
		Step C	59.7130	4777.04	10350.25	124203.04
		Step D	62.6987	5015.90	10867.77	130413.30
		Step E	65.8337	5266.70	11411.17	136934.10
		Step F	69.1254	5530.03	11981.74	143780.83
		Step G	72.5816	5806.53	12580.81	150969.73

City of Roseville

Salary Schedule: Management-A

Appendix:E
Effective Date:08/24/2024

MGMT Management

Grade Code	Grade Name	Step Name	Hourly	Bi-Weekly	Monthly	Annual
1143A	Recreation Superintendent-A	Step A	45.9191	3673.53	7959.31	95511.73
		Step B	48.2151	3857.21	8357.28	100287.41
		Step C	50.6258	4050.06	8775.14	105301.66
		Step D	53.1570	4252.56	9213.88	110566.56
		Step E	55.8153	4465.22	9674.65	116095.82
		Step F	58.6058	4688.46	10158.34	121900.06
		Step G	61.5358	4922.86	10666.21	127994.46
1144A	Recreation Supervisor-A	Step A	38.0866	3046.93	6601.68	79220.13
		Step B	39.9907	3199.26	6931.72	83180.66
		Step C	41.9904	3359.23	7278.34	87340.03
		Step D	44.0899	3527.19	7642.25	91706.99
		Step E	46.2944	3703.55	8024.36	96292.35
		Step F	48.6090	3888.72	8425.56	101106.72
		Step G	51.0395	4083.16	8846.85	106162.16

City of Roseville

Salary Schedule: Management-A

Appendix:E
Effective Date:08/24/2024

MGMT Management

Grade Code	Grade Name	Step Name	Hourly	Bi-Weekly	Monthly	Annual
6231A	Refuse Superintendent-A	Step A	49.7828	3982.62	8629.02	103548.22
		Step B	52.2720	4181.76	9060.48	108725.76
		Step C	54.8856	4390.85	9513.50	114162.05
		Step D	57.6300	4610.40	9989.20	119870.40
		Step E	60.5113	4840.90	10488.63	125863.50
		Step F	63.5370	5082.96	11013.08	132156.96
		Step G	66.7137	5337.10	11563.71	138764.50
6235A	Refuse Supervisor-A	Step A	41.4857	3318.86	7190.85	86290.26
		Step B	43.5600	3484.80	7550.40	90604.80
		Step C	45.7381	3659.05	7927.94	95135.25
		Step D	48.0242	3841.94	8324.19	99890.34
		Step E	50.4252	4034.02	8740.37	104884.42
		Step F	52.9464	4235.71	9177.38	110128.51
		Step G	55.5939	4447.51	9636.28	115635.31

City of Roseville

Salary Schedule: Management-A

Appendix:E
Effective Date:08/24/2024

MGMT Management

Grade Code	Grade Name	Step Name	Hourly	Bi-Weekly	Monthly	Annual
6244A	Refuse and Stormwater Manager-A	Step A	66.8492	5347.94	11587.19	139046.34
		Step B	70.1917	5615.34	12166.56	145998.74
		Step C	73.7007	5896.06	12774.79	153297.46
		Step D	77.3861	6190.89	13413.59	160963.09
		Step E	81.2552	6500.42	14084.23	169010.82
		Step F	85.3178	6825.42	14788.42	177461.02
		Step G	89.5838	7166.70	15527.86	186334.30
6450A	Risk Manager-A	Step A	59.5910	4767.28	10329.11	123949.28
		Step B	62.5706	5005.65	10845.57	130146.85
		Step C	65.6993	5255.94	11387.88	136654.54
		Step D	68.9841	5518.73	11957.24	143486.93
		Step E	72.4334	5794.67	12555.12	150661.47
		Step F	76.0551	6084.41	13182.88	158194.61
		Step G	79.8577	6388.62	13842.00	166104.02

City of Roseville

Salary Schedule: Management-A

Appendix:E
Effective Date:08/24/2024

MGMT Management

Grade Code	Grade Name	Step Name	Hourly	Bi-Weekly	Monthly	Annual
6500A	Safety Coordinator-A	Step A	41.7429	3339.43	7235.44	86825.23
		Step B	43.8298	3506.38	7597.17	91165.98
		Step C	46.0213	3681.70	7977.03	95724.30
		Step D	48.3225	3865.80	8375.90	100510.80
		Step E	50.7384	4059.07	8794.66	105535.87
		Step F	53.2753	4262.02	9234.39	110812.62
		Step G	55.9394	4475.15	9696.16	116353.95
7130A	Senior Business Systems Analyst-A	Step A	45.5054	3640.43	7887.60	94651.23
		Step B	47.7808	3822.46	8282.01	99384.06
		Step C	50.1697	4013.58	8696.08	104352.98
		Step D	52.6782	4214.26	9130.89	109570.66
		Step E	55.3122	4424.98	9587.45	115049.38
		Step F	58.0777	4646.22	10066.80	120801.62
		Step G	60.9817	4878.54	10570.16	126841.94

City of Roseville

Salary Schedule: Management-A

Appendix:E
Effective Date:08/24/2024

MGMT Management

Grade Code	Grade Name	Step Name	Hourly	Bi-Weekly	Monthly	Annual
7145A	Senior Database Analyst-A	Step A	45.5054	3640.43	7887.60	94651.23
		Step B	47.7808	3822.46	8282.01	99384.06
		Step C	50.1697	4013.58	8696.08	104352.98
		Step D	52.6782	4214.26	9130.89	109570.66
		Step E	55.3122	4424.98	9587.45	115049.38
		Step F	58.0777	4646.22	10066.80	120801.62
		Step G	60.9817	4878.54	10570.16	126841.94
7123A	Senior Deputy City Attorney-A	Step A	81.7948	6543.58	14177.77	170133.18
		Step B	85.8846	6870.77	14886.66	178639.97
		Step C	90.1789	7214.31	15631.01	187572.11
		Step D	94.6878	7575.02	16412.55	196950.62
		Step E	99.4223	7953.78	17233.20	206798.38
		Step F	104.3931	8351.45	18094.80	217137.65
		Step G	109.6129	8769.03	18999.57	227994.83

City of Roseville

Salary Schedule: Management-A

Appendix:E
Effective Date:08/24/2024

MGMT Management

Grade Code	Grade Name	Step Name	Hourly	Bi-Weekly	Monthly	Annual
1097A	Senior Development Services Business Analyst-A	Step A	45.5047	3640.38	7887.48	94649.78
		Step B	47.7800	3822.40	8281.87	99382.40
		Step C	50.1689	4013.51	8695.94	104351.31
		Step D	52.6774	4214.19	9130.75	109568.99
		Step E	55.3113	4424.90	9587.29	115047.50
		Step F	58.0768	4646.14	10066.65	120799.74
		Step G	60.9807	4878.46	10569.99	126839.86
7128A	Senior Electric Business Analyst-A	Step A	59.4219	4753.75	10299.80	123597.55
		Step B	62.3929	4991.43	10814.77	129777.23
		Step C	65.5127	5241.02	11355.53	136266.42
		Step D	68.7881	5503.05	11923.27	143079.25
		Step E	72.2275	5778.20	12519.43	150233.20
		Step F	75.8390	6067.12	13145.43	157745.12
		Step G	79.6311	6370.49	13802.72	165632.69

City of Roseville

Salary Schedule: Management-A

Appendix:E
Effective Date:08/24/2024

MGMT Management

Grade Code	Grade Name	Step Name	Hourly	Bi-Weekly	Monthly	Annual
1023A	Senior Electric Technology Systems Analyst-A	Step A	61.1103	4888.82	10592.45	127109.42
		Step B	64.1657	5133.26	11122.05	133464.66
		Step C	67.3741	5389.93	11678.18	140138.13
		Step D	70.7428	5659.42	12262.09	147145.02
		Step E	74.2799	5942.39	12875.18	154502.19
		Step F	77.9939	6239.51	13518.94	162227.31
		Step G	81.8936	6551.49	14194.89	170338.69
7163A	Senior Energy Services Account Representative-A	Step A	59.2013	4736.10	10261.56	123138.70
		Step B	62.1615	4972.92	10774.66	129295.92
		Step C	65.2695	5221.56	11313.38	135760.56
		Step D	68.5330	5482.64	11879.05	142548.64
		Step E	71.9597	5756.78	12473.01	149676.18
		Step F	75.5577	6044.62	13096.67	157160.02
		Step G	79.3355	6346.84	13751.49	165017.84

City of Roseville

Salary Schedule: Management-A

Appendix:E
Effective Date:08/24/2024

MGMT Management

Grade Code	Grade Name	Step Name	Hourly	Bi-Weekly	Monthly	Annual
7142A	Senior Engineer-A	Step A	52.8182	4225.46	9155.15	109861.86
		Step B	55.4594	4436.75	9612.96	115355.55
		Step C	58.2321	4658.57	10093.56	121122.77
		Step D	61.1440	4891.52	10598.29	127179.52
		Step E	64.2008	5136.06	11128.14	133537.66
		Step F	67.4111	5392.89	11684.59	140215.09
		Step G	70.7816	5662.53	12268.81	147225.73
1065A	Senior Environmental Utilities Business Analyst-A	Step A	48.2147	3857.18	8357.21	100286.58
		Step B	50.6252	4050.02	8775.03	105300.42
		Step C	53.1566	4252.53	9213.81	110565.73
		Step D	55.8144	4465.15	9674.50	116093.95
		Step E	58.6054	4688.43	10158.27	121899.23
		Step F	61.5354	4922.83	10666.14	127993.63
		Step G	64.6122	5168.98	11199.45	134393.38

City of Roseville

Salary Schedule: Management-A

Appendix:E
Effective Date:08/24/2024

MGMT Management

Grade Code	Grade Name	Step Name	Hourly	Bi-Weekly	Monthly	Annual
7161A	Senior GIS Analyst-A	Step A	45.3077	3624.62	7853.33	94240.02
		Step B	47.5730	3805.84	8245.99	98951.84
		Step C	49.9516	3996.13	8658.28	103899.33
		Step D	52.4494	4195.95	9091.23	109094.75
		Step E	55.0719	4405.75	9545.80	114549.55
		Step F	57.8255	4626.04	10023.09	120277.04
		Step G	60.7167	4857.34	10524.23	126290.74
7150A	Senior Human Resources Analyst-A	Step A	47.1066	3768.53	8165.14	97981.73
		Step B	49.4617	3956.94	8573.36	102880.34
		Step C	51.9349	4154.79	9002.05	108024.59
		Step D	54.5315	4362.52	9452.13	113425.52
		Step E	57.2582	4580.66	9924.75	119097.06
		Step F	60.1211	4809.69	10420.99	125051.89
		Step G	63.1270	5050.16	10942.01	131304.16

City of Roseville

Salary Schedule: Management-A

Appendix:E
Effective Date:08/24/2024

MGMT Management

Grade Code	Grade Name	Step Name	Hourly	Bi-Weekly	Monthly	Annual
7194A	Senior Information Technology Analyst-A	Step A	45.5054	3640.43	7887.60	94651.23
		Step B	47.7808	3822.46	8282.01	99384.06
		Step C	50.1697	4013.58	8696.08	104352.98
		Step D	52.6782	4214.26	9130.89	109570.66
		Step E	55.3122	4424.98	9587.45	115049.38
		Step F	58.0777	4646.22	10066.80	120801.62
		Step G	60.9817	4878.54	10570.16	126841.94
1119A	Senior Park Development Project Manager-A	Step A	45.9170	3673.36	7958.95	95507.36
		Step B	48.2130	3857.04	8356.92	100283.04
		Step C	50.6236	4049.89	8774.76	105297.09
		Step D	53.1548	4252.38	9213.50	110561.98
		Step E	55.8125	4465.00	9674.17	116090.00
		Step F	58.6031	4688.25	10157.87	121894.45
		Step G	61.5333	4922.66	10665.77	127989.26

City of Roseville

Salary Schedule: Management-A

Appendix:E
Effective Date:08/24/2024

MGMT Management

Grade Code	Grade Name	Step Name	Hourly	Bi-Weekly	Monthly	Annual
7180A	Senior Planner-A	Step A	48.1569	3852.55	8347.20	100166.35
		Step B	50.5648	4045.18	8764.57	105174.78
		Step C	53.0930	4247.44	9202.79	110433.44
		Step D	55.7476	4459.81	9662.92	115955.01
		Step E	58.5352	4682.82	10146.10	121753.22
		Step F	61.4620	4916.96	10653.41	127840.96
		Step G	64.5349	5162.79	11186.05	134232.59
7151A	Senior Power Engineer-A	Step A	75.0743	6005.94	13012.88	156154.54
		Step B	78.8279	6306.23	13663.50	163962.03
		Step C	82.7694	6621.55	14346.70	172160.35
		Step D	86.9079	6952.63	15064.04	180768.43
		Step E	91.2531	7300.25	15817.20	189806.45
		Step F	95.8158	7665.26	16608.07	199296.86
		Step G	100.6066	8048.53	17438.48	209261.73

City of Roseville

Salary Schedule: Management-A

Appendix:E
Effective Date:08/24/2024

MGMT Management

Grade Code	Grade Name	Step Name	Hourly	Bi-Weekly	Monthly	Annual
5555A	Senior Power Plant Engineer-A	Step A	75.0743	6005.94	13012.88	156154.54
		Step B	78.8279	6306.23	13663.50	163962.03
		Step C	82.7694	6621.55	14346.70	172160.35
		Step D	86.9079	6952.63	15064.04	180768.43
		Step E	91.2531	7300.25	15817.20	189806.45
		Step F	95.8158	7665.26	16608.07	199296.86
		Step G	100.6066	8048.53	17438.48	209261.73
1029A	Senior Utility Billing Analyst-A	Step A	46.0265	3682.12	7977.93	95735.12
		Step B	48.3280	3866.24	8376.85	100522.24
		Step C	50.7444	4059.55	8795.70	105548.35
		Step D	53.2815	4262.52	9235.46	110825.52
		Step E	55.9457	4475.66	9697.25	116367.06
		Step F	58.7429	4699.43	10182.10	122185.23
		Step G	61.6800	4934.40	10691.20	128294.40

City of Roseville

Salary Schedule: Management-A

Appendix:E
Effective Date:08/24/2024

MGMT Management

Grade Code	Grade Name	Step Name	Hourly	Bi-Weekly	Monthly	Annual
1073A	Street Maintenance Manager-A	Step A	59.4600	4756.80	10306.40	123676.80
		Step B	62.4329	4994.63	10821.70	129860.43
		Step C	65.5547	5244.38	11362.81	136353.78
		Step D	68.8324	5506.59	11930.95	143171.39
		Step E	72.2739	5781.91	12527.48	150329.71
		Step F	75.8876	6071.01	13153.85	157846.21
		Step G	79.6821	6374.57	13811.56	165738.77
7522A	Street Maintenance Supervisor-A	Step A	38.1973	3055.78	6620.87	79450.38
		Step B	40.1072	3208.58	6951.91	83422.98
		Step C	42.1125	3369.00	7299.50	87594.00
		Step D	44.2182	3537.46	7664.49	91973.86
		Step E	46.4291	3714.33	8047.71	96572.53
		Step F	48.7506	3900.05	8450.10	101401.25
		Step G	51.1880	4095.04	8872.59	106471.04

City of Roseville

Salary Schedule: Management-A

Appendix:E
Effective Date:08/24/2024

MGMT Management

Grade Code	Grade Name	Step Name	Hourly	Bi-Weekly	Monthly	Annual
1110A	Transit Operations Supervisor-A	Step A	45.9171	3673.37	7958.96	95507.57
		Step B	48.2129	3857.03	8356.90	100282.83
		Step C	50.6235	4049.88	8774.74	105296.88
		Step D	53.1549	4252.39	9213.52	110562.19
		Step E	55.8126	4465.01	9674.18	116090.21
		Step F	58.6032	4688.26	10157.89	121894.66
		Step G	61.5332	4922.66	10665.75	127989.06
8762A	Urban Forester-A	Step A	41.8236	3345.89	7249.42	86993.09
		Step B	43.9145	3513.16	7611.85	91342.16
		Step C	46.1104	3688.83	7992.47	95909.63
		Step D	48.4159	3873.27	8392.09	100705.07
		Step E	50.8368	4066.94	8811.71	105740.54
		Step F	53.3784	4270.27	9252.26	111027.07
		Step G	56.0473	4483.78	9714.87	116578.38

City of Roseville

Salary Schedule: Management-A

Appendix:E
Effective Date:08/24/2024

MGMT Management

Grade Code	Grade Name	Step Name	Hourly	Bi-Weekly	Monthly	Annual
1041A	Utility Billing and Field Services Supervisor-A	Step A	47.3681	3789.45	8210.47	98525.65
		Step B	49.7365	3978.92	8620.99	103451.92
		Step C	52.2232	4177.86	9052.02	108624.26
		Step D	54.8343	4386.74	9504.61	114055.34
		Step E	57.5761	4606.09	9979.86	119758.29
		Step F	60.4550	4836.40	10478.87	125746.40
		Step G	63.4777	5078.22	11002.80	132033.62

City of Roseville

Salary Schedule: Management-A

Appendix:E
Effective Date:08/24/2024

MGMT Management

Grade Code	Grade Name	Step Name	Hourly	Bi-Weekly	Monthly	Annual
1042A	Utility Customer Service Supervisor-A	Step A	34.0428	2723.42	5900.75	70809.02
		Step B	35.7447	2859.58	6195.75	74348.98
		Step C	37.5321	3002.57	6505.56	78066.77
		Step D	39.4086	3152.69	6830.82	81969.89
		Step E	41.3790	3310.32	7172.36	86068.32
		Step F	43.4481	3475.85	7531.00	90372.05
		Step G	45.6205	3649.64	7907.55	94890.64
1102A	Utility Exploration Center Supervisor-A	Step A	39.7899	3183.19	6896.92	82762.99
		Step B	41.7791	3342.33	7241.71	86900.53
		Step C	43.8682	3509.46	7603.82	91245.86
		Step D	46.0617	3684.94	7984.03	95808.34
		Step E	48.3647	3869.18	8383.21	100598.58
		Step F	50.7828	4062.62	8802.35	105628.22
		Step G	53.3220	4265.76	9242.48	110909.76

City of Roseville

Salary Schedule: Management-A

Appendix:E
Effective Date:08/24/2024

MGMT Management

Grade Code	Grade Name	Step Name	Hourly	Bi-Weekly	Monthly	Annual
1646A	Utility Government Relations Administrator-A	Step A	50.0899	4007.19	8682.25	104186.99
		Step B	52.5944	4207.55	9116.36	109396.35
		Step C	55.2239	4417.91	9572.14	114865.71
		Step D	57.9852	4638.82	10050.77	120609.22
		Step E	60.8844	4870.75	10553.30	126639.55
		Step F	63.9287	5114.30	11080.97	132971.70
		Step G	67.1251	5370.01	11635.02	139620.21
8980A	Wastewater Collection Superintendent-A	Step A	49.7828	3982.62	8629.02	103548.22
		Step B	52.2720	4181.76	9060.48	108725.76
		Step C	54.8856	4390.85	9513.50	114162.05
		Step D	57.6300	4610.40	9989.20	119870.40
		Step E	60.5113	4840.90	10488.63	125863.50
		Step F	63.5370	5082.96	11013.08	132156.96
		Step G	66.7137	5337.10	11563.71	138764.50

City of Roseville

Salary Schedule: Management-A

Appendix:E
Effective Date:08/24/2024

MGMT Management

Grade Code	Grade Name	Step Name	Hourly	Bi-Weekly	Monthly	Annual
8978A	Wastewater Collection Supervisor-A	Step A	41.4841	3318.73	7190.58	86286.93
		Step B	43.5579	3484.63	7550.04	90600.43
		Step C	45.7360	3658.88	7927.57	95130.88
		Step D	48.0228	3841.82	8323.95	99887.42
		Step E	50.4240	4033.92	8740.16	104881.92
		Step F	52.9449	4235.59	9177.12	110125.39
		Step G	55.5922	4447.38	9635.98	115631.78
9040A	Wastewater Treatment Plant Chief Operator-A	Step A	54.7564	4380.51	9491.11	113893.31
		Step B	57.4944	4599.55	9965.70	119588.35
		Step C	60.3688	4829.50	10463.93	125567.10
		Step D	63.3876	5071.01	10987.18	131846.21
		Step E	66.5567	5324.54	11536.49	138437.94
		Step F	69.8845	5590.76	12113.31	145359.76
		Step G	73.3786	5870.29	12718.96	152627.49

City of Roseville

Salary Schedule: Management-A

Appendix:E
Effective Date:08/24/2024

MGMT Management

Grade Code	Grade Name	Step Name	Hourly	Bi-Weekly	Monthly	Annual
9045A	Wastewater Utility Manager-A	Step A	66.8492	5347.94	11587.19	139046.34
		Step B	70.1917	5615.34	12166.56	145998.74
		Step C	73.7007	5896.06	12774.79	153297.46
		Step D	77.3861	6190.89	13413.59	160963.09
		Step E	81.2552	6500.42	14084.23	169010.82
		Step F	85.3178	6825.42	14788.42	177461.02
		Step G	89.5838	7166.70	15527.86	186334.30
9047A	Water Conservation Administrator-A	Step A	45.6340	3650.72	7909.89	94918.72
		Step B	47.9158	3833.26	8305.41	99664.86
		Step C	50.3116	4024.93	8720.68	104648.13
		Step D	52.8271	4226.17	9156.70	109880.37
		Step E	55.4685	4437.48	9614.54	115374.48
		Step F	58.2423	4659.38	10095.33	121143.98
		Step G	61.1541	4892.33	10600.04	127200.53

City of Roseville

Salary Schedule: Management-A

Appendix:E
Effective Date:08/24/2024

MGMT Management

Grade Code	Grade Name	Step Name	Hourly	Bi-Weekly	Monthly	Annual
9085A	Water Distribution Superintendent-A	Step A	49.0486	3923.89	8501.76	102021.09
		Step B	52.2720	4181.76	9060.48	108725.76
		Step C	54.8856	4390.85	9513.50	114162.05
		Step D	57.6300	4610.40	9989.20	119870.40
		Step E	60.5113	4840.90	10488.63	125863.50
		Step F	63.5370	5082.96	11013.08	132156.96
		Step G	66.7137	5337.10	11563.71	138764.50
9084A	Water Distribution Supervisor-A	Step A	41.4840	3318.72	7190.56	86286.72
		Step B	43.5579	3484.63	7550.04	90600.43
		Step C	45.7360	3658.88	7927.57	95130.88
		Step D	48.0228	3841.82	8323.95	99887.42
		Step E	50.4239	4033.91	8740.14	104881.71
		Step F	52.9449	4235.59	9177.12	110125.39
		Step G	55.5922	4447.38	9635.98	115631.78

City of Roseville

Salary Schedule: Management-A

Appendix:E
Effective Date:08/24/2024

MGMT Management

Grade Code	Grade Name	Step Name	Hourly	Bi-Weekly	Monthly	Annual
9101A	Water Quality Lab Supervisor-A	Step A	43.5565	3484.52	7549.79	90597.52
		Step B	45.7343	3658.74	7927.28	95127.34
		Step C	48.0209	3841.67	8323.62	99883.47
		Step D	50.4219	4033.75	8739.80	104877.55
		Step E	52.9431	4235.45	9176.80	110121.65
		Step F	55.5903	4447.22	9635.65	115627.82
		Step G	58.3697	4669.58	10117.41	121408.98
9175A	Water Treatment Plant Chief Operator-A	Step A	49.7784	3982.27	8628.26	103539.07
		Step B	52.2676	4181.41	9059.72	108716.61
		Step C	54.8807	4390.46	9512.65	114151.86
		Step D	57.6250	4610.00	9988.33	119860.00
		Step E	60.5060	4840.48	10487.71	125852.48
		Step F	63.5315	5082.52	11012.13	132145.52
		Step G	66.7080	5336.64	11562.72	138752.64

City of Roseville

Salary Schedule: Management-A

Appendix:E
Effective Date:08/24/2024

MGMT Management

Grade Code	Grade Name	Step Name	Hourly	Bi-Weekly	Monthly	Annual
9244A	Water Utility Manager-A	Step A	66.8492	5347.94	11587.19	139046.34
		Step B	70.1917	5615.34	12166.56	145998.74
		Step C	73.7007	5896.06	12774.79	153297.46
		Step D	77.3861	6190.89	13413.59	160963.09
		Step E	81.2552	6500.42	14084.23	169010.82
		Step F	85.3178	6825.42	14788.42	177461.02
		Step G	89.5838	7166.70	15527.86	186334.30

City of Roseville

Salary Schedule: Management-B

Appendix:E
Effective Date:08/24/2024

MGMT Management

Grade Code	Grade Name	Step Name	Hourly	Bi-Weekly	Monthly	Annual
1505B	AMI Project Manager-B	Step A	54.7228	4377.82	9485.29	113823.42
		Step B	57.8903	4631.22	10034.32	120411.82
		Step C	59.6271	4770.17	10335.36	124024.37
		Step D	61.4159	4913.27	10645.42	127745.07
		Step E	63.2584	5060.67	10964.79	131577.47
		Step F	65.1562	5212.50	11293.74	135524.90
		Step G	67.1108	5368.86	11632.54	139590.46
		Step H	69.1242	5529.94	11981.53	143778.34
		Step I	71.1979	5695.83	12340.97	148091.63
		Step J	73.3338	5866.70	12711.19	152534.30

City of Roseville

Salary Schedule: Management-B

Appendix:E
Effective Date:08/24/2024

MGMT Management

Grade Code	Grade Name	Step Name	Hourly	Bi-Weekly	Monthly	Annual
1370B	Accounting Manager-B	Step A	62.8047	5024.38	10886.15	130633.78
		Step B	66.4401	5315.21	11516.28	138195.41
		Step C	68.4333	5474.66	11861.77	142341.26
		Step D	70.4862	5638.90	12217.61	146611.30
		Step E	72.6009	5808.07	12584.16	151009.87
		Step F	74.7789	5982.31	12961.68	155540.11
		Step G	77.0224	6161.79	13350.55	160206.59
		Step H	79.3330	6346.64	13751.05	165012.64
		Step I	81.7130	6537.04	14163.59	169963.04
		Step J	84.1643	6733.14	14588.48	175061.74

City of Roseville

Salary Schedule: Management-B

Appendix:E
Effective Date:08/24/2024

MGMT Management

Grade Code	Grade Name	Step Name	Hourly	Bi-Weekly	Monthly	Annual
0043B	Accounting Supervisor-B	Step A	52.1047	4168.38	9031.48	108377.78
		Step B	55.1209	4409.67	9554.29	114651.47
		Step C	56.7744	4541.95	9840.90	118090.75
		Step D	58.4777	4678.22	10136.13	121633.62
		Step E	60.2321	4818.57	10440.23	125282.77
		Step F	62.0390	4963.12	10753.43	129041.12
		Step G	63.9001	5112.01	11076.02	132912.21
		Step H	65.8172	5265.38	11408.31	136899.78
		Step I	67.7917	5423.34	11750.56	141006.74
		Step J	69.8254	5586.03	12103.07	145236.83

City of Roseville

Salary Schedule: Management-B

Appendix:E
Effective Date:08/24/2024

MGMT Management

Grade Code	Grade Name	Step Name	Hourly	Bi-Weekly	Monthly	Annual
9427B	Accounts Payable Supervisor-B	Step A	49.6233	3969.86	8601.37	103216.46
		Step B	52.4956	4199.65	9099.24	109190.85
		Step C	54.0705	4325.64	9372.22	112466.64
		Step D	55.6926	4455.41	9653.38	115840.61
		Step E	57.3634	4589.07	9942.99	119315.87
		Step F	59.0843	4726.74	10241.28	122895.34
		Step G	60.8568	4868.54	10548.51	126582.14
		Step H	62.6825	5014.60	10864.97	130379.60
		Step I	64.5630	5165.04	11190.92	134291.04
		Step J	66.4999	5319.99	11526.65	138319.79

City of Roseville

Salary Schedule: Management-B

Appendix:E
Effective Date:08/24/2024

MGMT Management

Grade Code	Grade Name	Step Name	Hourly	Bi-Weekly	Monthly	Annual
0090B	Alternative Transportation Manager-B	Step A	63.7302	5098.42	11046.57	132558.82
		Step B	67.4191	5393.53	11685.98	140231.73
		Step C	69.4417	5555.34	12036.56	144438.74
		Step D	71.5250	5722.00	12397.67	148772.00
		Step E	73.6707	5893.66	12769.59	153235.06
		Step F	75.8808	6070.46	13152.67	157832.06
		Step G	78.1573	6252.58	13547.27	162567.18
		Step H	80.5019	6440.15	13953.66	167443.95
		Step I	82.9170	6633.36	14372.28	172467.36
		Step J	85.4044	6832.35	14803.43	177641.15

City of Roseville

Salary Schedule: Management-B

Appendix:E
Effective Date:08/24/2024

MGMT Management

Grade Code	Grade Name	Step Name	Hourly	Bi-Weekly	Monthly	Annual
1017B	Assistant Building Official-B	Step A	48.1569	3852.55	8347.20	100166.35
		Step B	50.9445	4075.56	8830.38	105964.56
		Step C	52.4728	4197.82	9095.29	109143.42
		Step D	54.0469	4323.75	9368.13	112417.55
		Step E	55.6683	4453.46	9649.17	115790.06
		Step F	57.3384	4587.07	9938.66	119263.87
		Step G	59.0585	4724.68	10236.81	122841.68
		Step H	60.8304	4866.43	10543.94	126527.23
		Step I	62.6552	5012.42	10860.23	130322.82
		Step J	64.5349	5162.79	11186.05	134232.59

City of Roseville

Salary Schedule: Management-B

Appendix:E
Effective Date:08/24/2024

MGMT Management

Grade Code	Grade Name	Step Name	Hourly	Bi-Weekly	Monthly	Annual
0245B	Assistant City Attorney-B	Step A	94.0641	7525.13	16304.44	195653.33
		Step B	99.5089	7960.71	17248.21	206978.51
		Step C	102.4941	8199.53	17765.64	213187.73
		Step D	105.5690	8445.52	18298.63	219583.52
		Step E	108.7361	8698.89	18847.59	226171.09
		Step F	111.9981	8959.85	19413.00	232956.05
		Step G	115.3580	9228.64	19995.39	239944.64
		Step H	118.8188	9505.50	20595.26	247143.10
		Step I	122.3833	9790.66	21213.11	254557.26
		Step J	126.0548	10084.38	21849.50	262193.98

City of Roseville

Salary Schedule: Management-B

Appendix:E
Effective Date:08/24/2024

MGMT Management

Grade Code	Grade Name	Step Name	Hourly	Bi-Weekly	Monthly	Annual
0250B	Assistant City Clerk-B	Step A	48.0029	3840.23	8320.50	99846.03
		Step B	50.7816	4062.53	8802.14	105625.73
		Step C	52.3051	4184.41	9066.22	108794.61
		Step D	53.8743	4309.94	9338.21	112058.54
		Step E	55.4906	4439.25	9618.37	115420.45
		Step F	57.1553	4572.42	9906.92	118883.02
		Step G	58.8699	4709.59	10204.12	122449.39
		Step H	60.6359	4850.87	10510.22	126122.67
		Step I	62.4551	4996.41	10825.55	129906.61
		Step J	64.3287	5146.30	11150.31	133803.70

City of Roseville

Salary Schedule: Management-B

Appendix:E
Effective Date:08/24/2024

MGMT Management

Grade Code	Grade Name	Step Name	Hourly	Bi-Weekly	Monthly	Annual
0325B	Assistant City Manager-B	Step A	94.9999	7599.99	16466.65	197599.79
		Step B	100.4989	8039.91	17419.81	209037.71
		Step C	103.5138	8281.10	17942.39	215308.70
		Step D	106.6192	8529.54	18480.66	221767.94
		Step E	109.8178	8785.42	19035.09	228421.02
		Step F	113.1123	9048.98	19606.13	235273.58
		Step G	116.5056	9320.45	20194.30	242331.65
		Step H	120.0008	9600.06	20800.14	249601.66
		Step I	123.6008	9888.06	21424.14	257089.66
		Step J	127.3089	10184.71	22066.88	264802.51

City of Roseville

Salary Schedule: Management-B

Appendix:E
Effective Date:08/24/2024

MGMT Management

Grade Code	Grade Name	Step Name	Hourly	Bi-Weekly	Monthly	Annual
1021B	Assistant City Manager/Chief Financial Officer-B	Step A	94.9999	7599.99	16466.65	197599.79
		Step B	100.4989	8039.91	17419.81	209037.71
		Step C	103.5138	8281.10	17942.39	215308.70
		Step D	106.6192	8529.54	18480.66	221767.94
		Step E	109.8178	8785.42	19035.09	228421.02
		Step F	113.1123	9048.98	19606.13	235273.58
		Step G	116.5056	9320.45	20194.30	242331.65
		Step H	120.0008	9600.06	20800.14	249601.66
		Step I	123.6008	9888.06	21424.14	257089.66
		Step J	127.3089	10184.71	22066.88	264802.51

City of Roseville

Salary Schedule: Management-B

Appendix:E
Effective Date:08/24/2024

MGMT Management

Grade Code	Grade Name	Step Name	Hourly	Bi-Weekly	Monthly	Annual
1068B	Assistant Electric Analyst-B	Step A	37.2034	2976.27	6448.59	77383.07
		Step B	39.3570	3148.56	6821.88	81862.56
		Step C	40.5377	3243.02	7026.53	84318.42
		Step D	41.7537	3340.30	7237.31	86847.70
		Step E	43.0065	3440.52	7454.46	89453.52
		Step F	44.2965	3543.72	7678.06	92136.72
		Step G	45.6255	3650.04	7908.42	94901.04
		Step H	46.9943	3759.54	8145.68	97748.14
		Step I	48.4041	3872.33	8390.04	100680.53
		Step J	49.8562	3988.50	8641.74	103700.90

City of Roseville

Salary Schedule: Management-B

Appendix:E
Effective Date:08/24/2024

MGMT Management

Grade Code	Grade Name	Step Name	Hourly	Bi-Weekly	Monthly	Annual
0395B	Assistant Electric Utility Director-B	Step A	112.4490	8995.92	19491.16	233893.92
		Step B	118.9582	9516.66	20619.42	247433.06
		Step C	122.5270	9802.16	21238.01	254856.16
		Step D	126.2027	10096.22	21875.13	262501.62
		Step E	129.9889	10399.11	22531.41	270376.91
		Step F	133.8885	10711.08	23207.34	278488.08
		Step G	137.9051	11032.41	23903.55	286842.61
		Step H	142.0423	11363.38	24620.67	295447.98
		Step I	146.3035	11704.28	25359.27	304311.28
		Step J	150.6927	12055.42	26120.07	313440.82

City of Roseville

Salary Schedule: Management-B

Appendix:E
Effective Date:08/24/2024

MGMT Management

Grade Code	Grade Name	Step Name	Hourly	Bi-Weekly	Monthly	Annual
0411B	Assistant Environmental Utilities Director-B	Step A	76.8725	6149.80	13324.57	159894.80
		Step B	81.3223	6505.78	14095.87	169150.38
		Step C	83.7618	6700.94	14518.71	174224.54
		Step D	86.2747	6901.98	14954.28	179451.38
		Step E	88.8630	7109.04	15402.92	184835.04
		Step F	91.5289	7322.31	15865.01	190380.11
		Step G	94.2747	7541.98	16340.95	196091.38
		Step H	97.1029	7768.23	16831.17	201974.03
		Step I	100.0161	8001.29	17336.12	208033.49
		Step J	103.0165	8241.32	17856.19	214274.32

City of Roseville

Salary Schedule: Management-B

Appendix:E
Effective Date:08/24/2024

MGMT Management

Grade Code	Grade Name	Step Name	Hourly	Bi-Weekly	Monthly	Annual
1026B	Assistant Finance Director-B	Step A	72.2245	5777.96	12518.91	150226.96
		Step B	76.4051	6112.41	13243.55	158922.61
		Step C	78.6973	6295.78	13640.87	163690.38
		Step D	81.0583	6484.66	14050.11	168601.26
		Step E	83.4899	6679.19	14471.58	173658.99
		Step F	85.9946	6879.57	14905.73	178868.77
		Step G	88.5746	7085.97	15352.93	184235.17
		Step H	91.2317	7298.54	15813.49	189761.94
		Step I	93.9686	7517.49	16287.89	195454.69
		Step J	96.7878	7743.02	16776.55	201318.62

City of Roseville

Salary Schedule: Management-B

Appendix:E
Effective Date:08/24/2024

MGMT Management

Grade Code	Grade Name	Step Name	Hourly	Bi-Weekly	Monthly	Annual
0480B	Assistant Fire Chief-B	Step A	74.4805	5958.44	12909.95	154919.44
		Step B	78.7920	6303.36	13657.28	163887.36
		Step C	81.1557	6492.46	14066.99	168803.86
		Step D	83.5903	6687.22	14488.99	173867.82
		Step E	86.0981	6887.85	14923.67	179084.05
		Step F	88.6811	7094.49	15371.39	184456.69
		Step G	91.3414	7307.31	15832.51	189990.11
		Step H	94.0817	7526.54	16307.49	195689.94
		Step I	96.9041	7752.33	16796.71	201560.53
		Step J	99.8113	7984.90	17300.63	207607.50

City of Roseville

Salary Schedule: Management-B

Appendix:E
Effective Date:08/24/2024

MGMT Management

Grade Code	Grade Name	Step Name	Hourly	Bi-Weekly	Monthly	Annual
0484B	Assistant Human Resources Director-B	Step A	65.1431	5211.45	11291.47	135497.65
		Step B	68.9138	5513.10	11945.06	143340.70
		Step C	70.9812	5678.50	12303.41	147640.90
		Step D	73.1107	5848.86	12672.52	152070.26
		Step E	75.3040	6024.32	13052.69	156632.32
		Step F	77.5631	6205.05	13444.27	161331.25
		Step G	79.8900	6391.20	13847.60	166171.20
		Step H	82.2867	6582.94	14263.03	171156.34
		Step I	84.7553	6780.42	14690.92	176291.02
		Step J	87.2980	6983.84	15131.65	181579.84

City of Roseville

Salary Schedule: Management-B

Appendix:E
Effective Date:08/24/2024

MGMT Management

Grade Code	Grade Name	Step Name	Hourly	Bi-Weekly	Monthly	Annual
9558B	Assistant Information Technology Director-B	Step A	68.4017	5472.14	11856.29	142275.54
		Step B	72.3611	5788.89	12542.59	150511.09
		Step C	74.5319	5962.55	12918.86	155026.35
		Step D	76.7679	6141.43	13306.44	159677.23
		Step E	79.0710	6325.68	13705.64	164467.68
		Step F	81.4429	6515.43	14116.77	169401.23
		Step G	83.8863	6710.90	14540.29	174483.50
		Step H	86.4029	6912.23	14976.50	179718.03
		Step I	88.9950	7119.60	15425.80	185109.60
		Step J	91.6649	7333.19	15888.58	190662.99

City of Roseville

Salary Schedule: Management-B

Appendix:E
Effective Date:08/24/2024

MGMT Management

Grade Code	Grade Name	Step Name	Hourly	Bi-Weekly	Monthly	Annual
0510B	Assistant Police Chief-B	Step A	86.6885	6935.08	15026.01	180312.08
		Step B	91.7064	7336.51	15895.78	190749.31
		Step C	94.4576	7556.61	16372.65	196471.81
		Step D	97.2914	7783.31	16863.84	202366.11
		Step E	100.2100	8016.80	17369.73	208436.80
		Step F	103.2163	8257.30	17890.83	214689.90
		Step G	106.3128	8505.02	18427.55	221130.62
		Step H	109.5022	8760.18	18980.38	227764.58
		Step I	112.7872	9022.98	19549.78	234597.38
		Step J	116.1709	9293.67	20136.29	241635.47

City of Roseville

Salary Schedule: Management-B

Appendix:E
Effective Date:08/24/2024

MGMT Management

Grade Code	Grade Name	Step Name	Hourly	Bi-Weekly	Monthly	Annual
1148B	Assistant Public Works Director-B	Step A	71.2520	5700.16	12350.35	148204.16
		Step B	75.3764	6030.11	13065.24	156782.91
		Step C	77.6377	6211.02	13457.20	161486.42
		Step D	79.9668	6397.34	13860.91	166330.94
		Step E	82.3658	6589.26	14276.74	171320.86
		Step F	84.8368	6786.94	14705.05	176460.54
		Step G	87.3819	6990.55	15146.20	181754.35
		Step H	90.0033	7200.26	15600.57	187206.86
		Step I	92.7034	7416.27	16068.59	192823.07
		Step J	95.4845	7638.76	16550.65	198607.76

City of Roseville

Salary Schedule: Management-B

Appendix:E
Effective Date:08/24/2024

MGMT Management

Grade Code	Grade Name	Step Name	Hourly	Bi-Weekly	Monthly	Annual
0086B	Assistant Transportation Planner-B	Step A	37.9473	3035.78	6577.53	78930.38
		Step B	40.1439	3211.51	6958.28	83499.31
		Step C	41.3483	3307.86	7167.04	86004.46
		Step D	42.5888	3407.10	7382.06	88584.70
		Step E	43.8663	3509.30	7603.49	91241.90
		Step F	45.1823	3614.58	7831.60	93979.18
		Step G	46.5378	3723.02	8066.55	96798.62
		Step H	47.9340	3834.72	8308.56	99702.72
		Step I	49.3720	3949.76	8557.81	102693.76
		Step J	50.8531	4068.25	8814.54	105774.45

City of Roseville

Salary Schedule: Management-B

Appendix:E
Effective Date:08/24/2024

MGMT Management

Grade Code	Grade Name	Step Name	Hourly	Bi-Weekly	Monthly	Annual
1067B	Associate Electric Analyst-B	Step A	40.9237	3273.90	7093.44	85121.30
		Step B	43.2927	3463.42	7504.07	90048.82
		Step C	44.5914	3567.31	7729.18	92750.11
		Step D	45.9292	3674.34	7961.06	95532.74
		Step E	47.3070	3784.56	8199.88	98398.56
		Step F	48.7262	3898.10	8445.87	101350.50
		Step G	50.1880	4015.04	8699.25	104391.04
		Step H	51.6937	4135.50	8960.24	107522.90
		Step I	53.2445	4259.56	9229.05	110748.56
		Step J	54.8418	4387.34	9505.91	114070.94

City of Roseville

Salary Schedule: Management-B

Appendix:E
Effective Date:08/24/2024

MGMT Management

Grade Code	Grade Name	Step Name	Hourly	Bi-Weekly	Monthly	Annual
0088B	Associate Transportation Planner-B	Step A	41.7430	3339.44	7235.45	86825.44
		Step B	44.1591	3532.73	7654.24	91850.93
		Step C	45.4838	3638.70	7883.86	94606.30
		Step D	46.8483	3747.86	8120.37	97444.46
		Step E	48.2538	3860.30	8363.99	100367.90
		Step F	49.7014	3976.11	8614.91	103378.91
		Step G	51.1924	4095.39	8873.35	106480.19
		Step H	52.7282	4218.26	9139.55	109674.66
		Step I	54.3101	4344.81	9413.75	112965.01
		Step J	55.9394	4475.15	9696.16	116353.95

City of Roseville

Salary Schedule: Management-B

Appendix:E
Effective Date:08/24/2024

MGMT Management

Grade Code	Grade Name	Step Name	Hourly	Bi-Weekly	Monthly	Annual
0910B	Budget Analyst I-B	Step A	39.8435	3187.48	6906.21	82874.48
		Step B	42.1498	3371.98	7305.97	87671.58
		Step C	43.4143	3473.14	7525.15	90301.74
		Step D	44.7167	3577.34	7750.89	93010.74
		Step E	46.0582	3684.66	7983.42	95801.06
		Step F	47.4400	3795.20	8222.93	98675.20
		Step G	48.8632	3909.06	8469.62	101635.46
		Step H	50.3291	4026.33	8723.71	104684.53
		Step I	51.8390	4147.12	8985.43	107825.12
		Step J	53.3941	4271.53	9254.98	111059.73

City of Roseville

Salary Schedule: Management-B

Appendix:E
Effective Date:08/24/2024

MGMT Management

Grade Code	Grade Name	Step Name	Hourly	Bi-Weekly	Monthly	Annual
0915B	Budget Analyst II-B	Step A	43.8288	3506.30	7596.99	91163.90
		Step B	46.3659	3709.27	8036.76	96441.07
		Step C	47.7568	3820.54	8277.85	99334.14
		Step D	49.1895	3935.16	8526.18	102314.16
		Step E	50.6652	4053.22	8781.97	105383.62
		Step F	52.1852	4174.82	9045.43	108545.22
		Step G	53.7507	4300.06	9316.79	111801.46
		Step H	55.3633	4429.06	9596.31	115155.66
		Step I	57.0241	4561.93	9884.18	118610.13
		Step J	58.7349	4698.79	10180.72	122168.59

City of Roseville

Salary Schedule: Management-B

Appendix:E
Effective Date:08/24/2024

MGMT Management

Grade Code	Grade Name	Step Name	Hourly	Bi-Weekly	Monthly	Annual
0930B	Budget Manager-B	Step A	62.8047	5024.38	10886.15	130633.78
		Step B	66.4401	5315.21	11516.28	138195.41
		Step C	68.4333	5474.66	11861.77	142341.26
		Step D	70.4862	5638.90	12217.61	146611.30
		Step E	72.6009	5808.07	12584.16	151009.87
		Step F	74.7789	5982.31	12961.68	155540.11
		Step G	77.0224	6161.79	13350.55	160206.59
		Step H	79.3330	6346.64	13751.05	165012.64
		Step I	81.7130	6537.04	14163.59	169963.04
		Step J	84.1643	6733.14	14588.48	175061.74

City of Roseville

Salary Schedule: Management-B

Appendix:E
Effective Date:08/24/2024

MGMT Management

Grade Code	Grade Name	Step Name	Hourly	Bi-Weekly	Monthly	Annual
1043B	Building Official-B	Step A	63.1961	5055.69	10953.99	131447.89
		Step B	66.8540	5348.32	11588.03	139056.32
		Step C	68.8596	5508.77	11935.66	143227.97
		Step D	70.9253	5674.02	12293.72	147524.62
		Step E	73.0531	5844.25	12662.54	151950.45
		Step F	75.2447	6019.58	13042.41	156508.98
		Step G	77.5020	6200.16	13433.68	161204.16
		Step H	79.8271	6386.17	13836.70	166040.37
		Step I	82.2220	6577.76	14251.81	171021.76
		Step J	84.6886	6775.09	14679.36	176152.29

City of Roseville

Salary Schedule: Management-B

Appendix:E
Effective Date:08/24/2024

MGMT Management

Grade Code	Grade Name	Step Name	Hourly	Bi-Weekly	Monthly	Annual
1141B	Building Plans Examiner Supervsior-B	Step A	47.2133	3777.06	8183.64	98203.66
		Step B	49.9462	3995.70	8657.34	103888.10
		Step C	51.4446	4115.57	8917.06	107004.77
		Step D	52.9879	4239.03	9184.57	110214.83
		Step E	54.5776	4366.21	9460.12	113521.41
		Step F	56.2149	4497.19	9743.92	116926.99
		Step G	57.9013	4632.10	10036.23	120434.70
		Step H	59.6384	4771.07	10337.32	124047.87
		Step I	61.4275	4914.20	10647.43	127769.20
		Step J	63.2703	5061.62	10966.85	131602.22

City of Roseville

Salary Schedule: Management-B

Appendix:E
Effective Date:08/24/2024

MGMT Management

Grade Code	Grade Name	Step Name	Hourly	Bi-Weekly	Monthly	Annual
1180B	Chief Information Officer-B	Step A	85.5023	6840.18	14820.40	177844.78
		Step B	90.4515	7236.12	15678.26	188139.12
		Step C	93.1650	7453.20	16148.60	193783.20
		Step D	95.9600	7676.80	16633.07	199596.80
		Step E	98.8389	7907.11	17132.08	205584.91
		Step F	101.8040	8144.32	17646.03	211752.32
		Step G	104.8581	8388.65	18175.40	218104.85
		Step H	108.0039	8640.31	18720.68	224648.11
		Step I	111.2439	8899.51	19282.28	231387.31
		Step J	114.5814	9166.51	19860.78	238329.31

City of Roseville

Salary Schedule: Management-B

Appendix:E
Effective Date:08/24/2024

MGMT Management

Grade Code	Grade Name	Step Name	Hourly	Bi-Weekly	Monthly	Annual
1220B	City Clerk-B	Step A	70.6620	5652.96	12248.08	146976.96
		Step B	74.7522	5980.18	12957.05	155484.58
		Step C	76.9948	6159.58	13345.77	160149.18
		Step D	79.3047	6344.38	13746.15	164953.78
		Step E	81.6838	6534.70	14158.53	169902.30
		Step F	84.1343	6730.74	14583.28	174999.34
		Step G	86.6583	6932.66	15020.77	180249.26
		Step H	89.2581	7140.65	15471.40	185656.85
		Step I	91.9358	7354.86	15935.54	191226.46
		Step J	94.6939	7575.51	16413.61	196963.31

City of Roseville

Salary Schedule: Management-B

Appendix:E
Effective Date:08/24/2024

MGMT Management

Grade Code	Grade Name	Step Name	Hourly	Bi-Weekly	Monthly	Annual
1142B	City Librarian-B	Step A	52.8062	4224.50	9153.07	109836.90
		Step B	55.8634	4469.07	9682.99	116195.87
		Step C	57.5395	4603.16	9973.51	119682.16
		Step D	59.2656	4741.25	10272.70	123272.45
		Step E	61.0435	4883.48	10580.87	126970.48
		Step F	62.8749	5029.99	10898.32	130779.79
		Step G	64.7610	5180.88	11225.24	134702.88
		Step H	66.7039	5336.31	11562.01	138744.11
		Step I	68.7051	5496.41	11908.88	142906.61
		Step J	70.7662	5661.30	12266.14	147193.70

City of Roseville

Salary Schedule: Management-B

Appendix:E
Effective Date:08/24/2024

MGMT Management

Grade Code	Grade Name	Step Name	Hourly	Bi-Weekly	Monthly	Annual
1368B	Code Enforcement Supervisor-B	Step A	43.7167	3497.34	7577.56	90930.74
		Step B	46.2472	3699.78	8016.18	96194.18
		Step C	47.6347	3810.78	8256.68	99080.18
		Step D	49.0638	3925.10	8504.39	102052.70
		Step E	50.5356	4042.85	8759.50	105114.05
		Step F	52.0517	4164.14	9022.29	108267.54
		Step G	53.6133	4289.06	9292.97	111515.66
		Step H	55.2218	4417.74	9571.78	114861.34
		Step I	56.8783	4550.26	9858.91	118306.86
		Step J	58.5847	4686.78	10154.68	121856.18

City of Roseville

Salary Schedule: Management-B

Appendix:E
Effective Date:08/24/2024

MGMT Management

Grade Code	Grade Name	Step Name	Hourly	Bi-Weekly	Monthly	Annual
1027B	Construction Inspection Superintendent-B	Step A	49.1955	3935.64	8527.22	102326.64
		Step B	52.0433	4163.46	9020.84	108250.06
		Step C	53.6046	4288.37	9291.46	111497.57
		Step D	55.2128	4417.02	9570.22	114842.62
		Step E	56.8691	4549.53	9857.31	118287.73
		Step F	58.5752	4686.02	10153.03	121836.42
		Step G	60.3324	4826.59	10457.62	125491.39
		Step H	62.1425	4971.40	10771.37	129256.40
		Step I	64.0068	5120.54	11094.51	133134.14
		Step J	65.9269	5274.15	11427.33	137127.95

City of Roseville

Salary Schedule: Management-B

Appendix:E
Effective Date:08/24/2024

MGMT Management

Grade Code	Grade Name	Step Name	Hourly	Bi-Weekly	Monthly	Annual
3740B	Cultural Arts Supervisor-B	Step A	39.7899	3183.19	6896.92	82762.99
		Step B	42.0925	3367.40	7296.03	87552.40
		Step C	43.3553	3468.42	7514.92	90179.02
		Step D	44.6559	3572.47	7740.36	92884.27
		Step E	45.9957	3679.66	7972.59	95671.06
		Step F	47.3755	3790.04	8211.75	98541.04
		Step G	48.7968	3903.74	8458.11	101497.34
		Step H	50.2606	4020.85	8711.84	104542.05
		Step I	51.7685	4141.48	8973.21	107678.48
		Step J	53.3220	4265.76	9242.48	110909.76

City of Roseville

Salary Schedule: Management-B

Appendix:E
Effective Date:08/24/2024

MGMT Management

Grade Code	Grade Name	Step Name	Hourly	Bi-Weekly	Monthly	Annual
1025B	Custodian Supervisor-B	Step A	26.8003	2144.02	4645.39	55744.62
		Step B	28.3516	2268.13	4914.28	58971.33
		Step C	29.2021	2336.17	5061.70	60740.37
		Step D	30.0782	2406.26	5213.55	62562.66
		Step E	30.9805	2478.44	5369.95	64439.44
		Step F	31.9099	2552.79	5531.05	66372.59
		Step G	32.8672	2629.38	5696.98	68363.78
		Step H	33.8532	2708.26	5867.89	70414.66
		Step I	34.8688	2789.50	6043.93	72527.10
		Step J	35.9149	2873.19	6225.25	74702.99

City of Roseville

Salary Schedule: Management-B

Appendix:E
Effective Date:08/24/2024

MGMT Management

Grade Code	Grade Name	Step Name	Hourly	Bi-Weekly	Monthly	Annual
1150B	Customer Care Manager-B	Step A	54.4742	4357.94	9442.19	113306.34
		Step B	57.6274	4610.19	9988.75	119864.99
		Step C	59.3562	4748.50	10288.41	123460.90
		Step D	61.1369	4890.95	10597.06	127164.75
		Step E	62.9710	5037.68	10914.97	130979.68
		Step F	64.8602	5188.82	11242.43	134909.22
		Step G	66.8060	5344.48	11579.71	138956.48
		Step H	68.8101	5504.81	11927.08	143125.01
		Step I	70.8744	5669.95	12284.90	147418.75
		Step J	73.0007	5840.06	12653.45	151841.46

City of Roseville

Salary Schedule: Management-B

Appendix:E
Effective Date:08/24/2024

MGMT Management

Grade Code	Grade Name	Step Name	Hourly	Bi-Weekly	Monthly	Annual
9561B	Data Management System Administrator-B	Step A	56.6346	4530.77	9816.66	117799.97
		Step B	59.9129	4793.03	10384.90	124618.83
		Step C	61.7103	4936.82	10696.45	128357.42
		Step D	63.5617	5084.94	11017.36	132208.34
		Step E	65.4684	5237.47	11347.86	136174.27
		Step F	67.4325	5394.60	11688.30	140259.60
		Step G	69.4556	5556.45	12038.97	144467.65
		Step H	71.5391	5723.13	12400.11	148801.33
		Step I	73.6854	5894.83	12772.14	153265.63
		Step J	75.8960	6071.68	13155.31	157863.68

City of Roseville

Salary Schedule: Management-B

Appendix:E
Effective Date:08/24/2024

MGMT Management

Grade Code	Grade Name	Step Name	Hourly	Bi-Weekly	Monthly	Annual
1645B	Department Public Information Officer-B	Step A	49.5024	3960.19	8580.42	102964.99
		Step B	52.3679	4189.43	9077.10	108925.23
		Step C	53.9389	4315.11	9349.41	112192.91
		Step D	55.5572	4444.58	9629.91	115558.98
		Step E	57.2238	4577.90	9918.79	119025.50
		Step F	58.9406	4715.25	10216.37	122596.45
		Step G	60.7088	4856.70	10522.86	126274.30
		Step H	62.5301	5002.41	10838.55	130062.61
		Step I	64.4060	5152.48	11163.71	133964.48
		Step J	66.3381	5307.05	11498.60	137983.25

City of Roseville

Salary Schedule: Management-B

Appendix:E
Effective Date:08/24/2024

MGMT Management

Grade Code	Grade Name	Step Name	Hourly	Bi-Weekly	Monthly	Annual
1655B	Deputy City Attorney I-B	Step A	67.5992	5407.94	11717.19	140606.34
		Step B	71.5120	5720.96	12395.41	148744.96
		Step C	73.6573	5892.58	12767.27	153207.18
		Step D	75.8671	6069.37	13150.30	157803.57
		Step E	78.1430	6251.44	13544.79	162537.44
		Step F	80.4874	6438.99	13951.15	167413.79
		Step G	82.9021	6632.17	14369.70	172436.37
		Step H	85.3890	6831.12	14800.76	177609.12
		Step I	87.9507	7036.06	15244.79	182937.46
		Step J	90.5893	7247.14	15702.15	188425.74

City of Roseville

Salary Schedule: Management-B

Appendix:E
Effective Date:08/24/2024

MGMT Management

Grade Code	Grade Name	Step Name	Hourly	Bi-Weekly	Monthly	Annual
1658B	Deputy City Attorney II-B	Step A	74.3591	5948.73	12888.91	154666.93
		Step B	78.6632	6293.06	13634.95	163619.46
		Step C	81.0231	6481.85	14044.00	168528.05
		Step D	83.4538	6676.30	14465.33	173583.90
		Step E	85.9574	6876.59	14899.28	178791.39
		Step F	88.5362	7082.90	15346.27	184155.30
		Step G	91.1921	7295.37	15806.63	189679.57
		Step H	93.9280	7514.24	16280.85	195370.24
		Step I	96.7458	7739.66	16769.27	201231.26
		Step J	99.6483	7971.86	17272.37	207268.46

City of Roseville

Salary Schedule: Management-B

Appendix:E
Effective Date:08/24/2024

MGMT Management

Grade Code	Grade Name	Step Name	Hourly	Bi-Weekly	Monthly	Annual
1659B	Deputy City Manager-B	Step A	77.7283	6218.26	13472.91	161674.86
		Step B	82.2275	6578.20	14252.77	171033.20
		Step C	84.6944	6775.55	14680.36	176164.35
		Step D	87.2351	6978.81	15120.75	181449.01
		Step E	89.8522	7188.18	15574.38	186892.58
		Step F	92.5477	7403.82	16041.60	192499.22
		Step G	95.3242	7625.94	16522.86	198274.34
		Step H	98.1840	7854.72	17018.56	204222.72
		Step I	101.1295	8090.36	17529.11	210349.36
		Step J	104.1633	8333.06	18054.97	216659.66

City of Roseville

Salary Schedule: Management-B

Appendix:E
Effective Date:08/24/2024

MGMT Management

Grade Code	Grade Name	Step Name	Hourly	Bi-Weekly	Monthly	Annual
1280B	Development Services Administrator-B	Step A	52.2948	4183.58	9064.43	108773.18
		Step B	55.3219	4425.75	9589.13	115069.55
		Step C	56.9814	4558.51	9876.78	118521.31
		Step D	58.6908	4695.26	10173.07	122076.86
		Step E	60.4516	4836.13	10478.28	125739.33
		Step F	62.2652	4981.22	10792.63	129511.62
		Step G	64.1331	5130.65	11116.40	133396.85
		Step H	66.0571	5284.57	11449.90	137398.77
		Step I	68.0387	5443.10	11793.37	141520.50
		Step J	70.0799	5606.39	12147.18	145766.19

City of Roseville

Salary Schedule: Management-B

Appendix:E
Effective Date:08/24/2024

MGMT Management

Grade Code	Grade Name	Step Name	Hourly	Bi-Weekly	Monthly	Annual
1676B	Development Services Director-B	Step A	85.5025	6840.20	14820.43	177845.20
		Step B	90.4516	7236.13	15678.28	188139.33
		Step C	93.1652	7453.22	16148.63	193783.62
		Step D	95.9602	7676.82	16633.10	199597.22
		Step E	98.8390	7907.12	17132.09	205585.12
		Step F	101.8041	8144.33	17646.04	211752.53
		Step G	104.8582	8388.66	18175.42	218105.06
		Step H	108.0039	8640.31	18720.68	224648.11
		Step I	111.2441	8899.53	19282.31	231387.73
		Step J	114.5814	9166.51	19860.78	238329.31

City of Roseville

Salary Schedule: Management-B

Appendix:E
Effective Date:08/24/2024

MGMT Management

Grade Code	Grade Name	Step Name	Hourly	Bi-Weekly	Monthly	Annual
1695B	Development Services Manager-B	Step A	62.2290	4978.32	10786.36	129436.32
		Step B	65.8312	5266.50	11410.74	136928.90
		Step C	67.8061	5424.49	11753.06	141036.69
		Step D	69.8402	5587.22	12105.63	145267.62
		Step E	71.9355	5754.84	12468.82	149625.84
		Step F	74.0935	5927.48	12842.87	154114.48
		Step G	76.3164	6105.31	13228.18	158738.11
		Step H	78.6059	6288.47	13625.02	163500.27
		Step I	80.9640	6477.12	14033.76	168405.12
		Step J	83.3930	6671.44	14454.79	173457.44

City of Roseville

Salary Schedule: Management-B

Appendix:E
Effective Date:08/24/2024

MGMT Management

Grade Code	Grade Name	Step Name	Hourly	Bi-Weekly	Monthly	Annual
2415B	EMS Quality Assurance Coordinator-B	Step A	55.5366	4442.93	9626.34	115516.13
		Step B	58.7513	4700.10	10183.56	122202.70
		Step C	60.5139	4841.11	10489.08	125868.91
		Step D	62.3293	4986.34	10803.75	129644.94
		Step E	64.1991	5135.93	11127.84	133534.13
		Step F	66.1251	5290.01	11461.68	137540.21
		Step G	68.1090	5448.72	11805.56	141666.72
		Step H	70.1522	5612.18	12159.71	145916.58
		Step I	72.2568	5780.54	12524.51	150294.14
		Step J	74.4244	5953.95	12900.23	154802.75

City of Roseville

Salary Schedule: Management-B

Appendix:E
Effective Date:08/24/2024

MGMT Management

Grade Code	Grade Name	Step Name	Hourly	Bi-Weekly	Monthly	Annual
6520B	ERP Program Manager-B	Step A	54.7230	4377.84	9485.32	113823.84
		Step B	57.8904	4631.23	10034.34	120412.03
		Step C	59.6271	4770.17	10335.36	124024.37
		Step D	61.4158	4913.26	10645.41	127744.86
		Step E	63.2583	5060.66	10964.77	131577.26
		Step F	65.1561	5212.49	11293.72	135524.69
		Step G	67.1108	5368.86	11632.54	139590.46
		Step H	69.1241	5529.93	11981.51	143778.13
		Step I	71.1978	5695.82	12340.95	148091.42
		Step J	73.3338	5866.70	12711.19	152534.30

City of Roseville

Salary Schedule: Management-B

Appendix:E
Effective Date:08/24/2024

MGMT Management

Grade Code	Grade Name	Step Name	Hourly	Bi-Weekly	Monthly	Annual
1674B	Economic Development Analyst I-B	Step A	37.9480	3035.84	6577.65	78931.84
		Step B	40.1445	3211.56	6958.38	83500.56
		Step C	41.3490	3307.92	7167.16	86005.92
		Step D	42.5894	3407.15	7382.16	88585.95
		Step E	43.8670	3509.36	7603.61	91243.36
		Step F	45.1830	3614.64	7831.72	93980.64
		Step G	46.5386	3723.09	8066.69	96800.29
		Step H	47.9347	3834.78	8308.68	99704.18
		Step I	49.3728	3949.82	8557.95	102695.42
		Step J	50.8539	4068.31	8814.68	105776.11

City of Roseville

Salary Schedule: Management-B

Appendix:E
Effective Date:08/24/2024

MGMT Management

Grade Code	Grade Name	Step Name	Hourly	Bi-Weekly	Monthly	Annual
1675B	Economic Development Analyst II-B	Step A	41.7430	3339.44	7235.45	86825.44
		Step B	44.1591	3532.73	7654.24	91850.93
		Step C	45.4838	3638.70	7883.86	94606.30
		Step D	46.8483	3747.86	8120.37	97444.46
		Step E	48.2538	3860.30	8363.99	100367.90
		Step F	49.7014	3976.11	8614.91	103378.91
		Step G	51.1924	4095.39	8873.35	106480.19
		Step H	52.7282	4218.26	9139.55	109674.66
		Step I	54.3101	4344.81	9413.75	112965.01
		Step J	55.9394	4475.15	9696.16	116353.95

City of Roseville

Salary Schedule: Management-B

Appendix:E
Effective Date:08/24/2024

MGMT Management

Grade Code	Grade Name	Step Name	Hourly	Bi-Weekly	Monthly	Annual
1710B	Economic Development Director-B	Step A	81.4337	6514.70	14115.17	169382.10
		Step B	86.1476	6891.81	14932.25	179187.01
		Step C	88.7321	7098.57	15380.23	184562.77
		Step D	91.3941	7311.53	15841.64	190099.73
		Step E	94.1358	7530.86	16316.87	195802.46
		Step F	96.9599	7756.79	16806.38	201676.59
		Step G	99.8687	7989.50	17310.57	207726.90
		Step H	102.8647	8229.18	17829.88	213958.58
		Step I	105.9507	8476.06	18364.79	220377.46
		Step J	109.1292	8730.34	18915.73	226988.74

City of Roseville

Salary Schedule: Management-B

Appendix:E
Effective Date:08/24/2024

MGMT Management

Grade Code	Grade Name	Step Name	Hourly	Bi-Weekly	Monthly	Annual
1118B	Economic Development Manager-B	Step A	56.4726	4517.81	9788.58	117463.01
		Step B	59.7438	4779.50	10355.59	124267.10
		Step C	61.5360	4922.88	10666.24	127994.88
		Step D	63.3821	5070.57	10986.23	131834.77
		Step E	65.2836	5222.69	11315.82	135789.89
		Step F	67.2420	5379.36	11655.28	139863.36
		Step G	69.2593	5540.74	12004.95	144059.34
		Step H	71.3370	5706.96	12365.08	148380.96
		Step I	73.4773	5878.18	12736.07	152832.78
		Step J	75.6814	6054.51	13118.11	157417.31

City of Roseville

Salary Schedule: Management-B

Appendix:E
Effective Date:08/24/2024

MGMT Management

Grade Code	Grade Name	Step Name	Hourly	Bi-Weekly	Monthly	Annual
1001B	Economic Development Project Manager-B	Step A	52.3696	4189.57	9077.40	108928.77
		Step B	55.4009	4432.07	9602.82	115233.87
		Step C	57.0629	4565.03	9890.90	118690.83
		Step D	58.7748	4701.98	10187.63	122251.58
		Step E	60.5380	4843.04	10493.25	125919.04
		Step F	62.3541	4988.33	10808.04	129696.53
		Step G	64.2248	5137.98	11132.30	133587.58
		Step H	66.1515	5292.12	11466.26	137595.12
		Step I	68.1361	5450.89	11810.26	141723.09
		Step J	70.1802	5614.42	12164.57	145974.82

City of Roseville

Salary Schedule: Management-B

Appendix:E
Effective Date:08/24/2024

MGMT Management

Grade Code	Grade Name	Step Name	Hourly	Bi-Weekly	Monthly	Annual
1310B	Electric Business Analyst I-B	Step A	49.1088	3928.70	8512.19	102146.30
		Step B	51.9514	4156.11	9004.91	108058.91
		Step C	53.5100	4280.80	9275.07	111300.80
		Step D	55.1154	4409.23	9553.34	114640.03
		Step E	56.7688	4541.50	9839.93	118079.10
		Step F	58.4719	4677.75	10135.13	121621.55
		Step G	60.2260	4818.08	10439.17	125270.08
		Step H	62.0327	4962.62	10752.33	129028.02
		Step I	63.8937	5111.50	11074.91	132898.90
		Step J	65.8106	5264.85	11407.17	136886.05

City of Roseville

Salary Schedule: Management-B

Appendix:E
Effective Date:08/24/2024

MGMT Management

Grade Code	Grade Name	Step Name	Hourly	Bi-Weekly	Monthly	Annual
1312B	Electric Business Analyst II-B	Step A	54.0194	4321.55	9363.36	112360.35
		Step B	57.1461	4571.69	9905.32	118863.89
		Step C	58.8606	4708.85	10202.50	122430.05
		Step D	60.6264	4850.11	10508.58	126102.91
		Step E	62.4452	4995.62	10823.83	129886.02
		Step F	64.3186	5145.49	11148.56	133782.69
		Step G	66.2481	5299.85	11483.00	137796.05
		Step H	68.2355	5458.84	11827.49	141929.84
		Step I	70.2826	5622.61	12182.32	146187.81
		Step J	72.3911	5791.29	12547.79	150573.49

City of Roseville

Salary Schedule: Management-B

Appendix:E
Effective Date:08/24/2024

MGMT Management

Grade Code	Grade Name	Step Name	Hourly	Bi-Weekly	Monthly	Annual
1066B	Electric Compliance Analyst I-B	Step A	49.1085	3928.68	8512.14	102145.68
		Step B	51.9511	4156.09	9004.86	108058.29
		Step C	53.5097	4280.78	9275.01	111300.18
		Step D	55.1149	4409.19	9553.25	114638.99
		Step E	56.7684	4541.47	9839.86	118078.27
		Step F	58.4715	4677.72	10135.06	121620.72
		Step G	60.2255	4818.04	10439.09	125269.04
		Step H	62.0324	4962.59	10752.28	129027.39
		Step I	63.8934	5111.47	11074.86	132898.27
		Step J	65.8102	5264.82	11407.10	136885.22

City of Roseville

Salary Schedule: Management-B

Appendix:E
Effective Date:08/24/2024

MGMT Management

Grade Code	Grade Name	Step Name	Hourly	Bi-Weekly	Monthly	Annual
2335B	Electric Compliance Analyst II-B	Step A	54.0202	4321.62	9363.50	112362.02
		Step B	57.1472	4571.78	9905.51	118866.18
		Step C	58.8615	4708.92	10202.66	122431.92
		Step D	60.6274	4850.19	10508.75	126104.99
		Step E	62.4462	4995.70	10824.01	129888.10
		Step F	64.3196	5145.57	11148.73	133784.77
		Step G	66.2492	5299.94	11483.19	137798.34
		Step H	68.2366	5458.93	11827.68	141932.13
		Step I	70.2837	5622.70	12182.51	146190.10
		Step J	72.3923	5791.38	12548.00	150575.98

City of Roseville

Salary Schedule: Management-B

Appendix:E
Effective Date:08/24/2024

MGMT Management

Grade Code	Grade Name	Step Name	Hourly	Bi-Weekly	Monthly	Annual
1151B	Electric Customer Programs and Public Affairs Supervisor-B	Step A	68.3352	5466.82	11844.77	142137.22
		Step B	72.2907	5783.26	12530.39	150364.66
		Step C	74.4595	5956.76	12906.31	154875.76
		Step D	76.6933	6135.46	13293.51	159522.06
		Step E	78.9941	6319.53	13692.31	164307.73
		Step F	81.3639	6509.11	14103.08	169236.91
		Step G	83.8049	6704.39	14526.18	174314.19
		Step H	86.3189	6905.51	14961.94	179543.31
		Step I	88.9085	7112.68	15410.81	184929.68
		Step J	91.5758	7326.06	15873.14	190477.66

City of Roseville

Salary Schedule: Management-B

Appendix:E
Effective Date:08/24/2024

MGMT Management

Grade Code	Grade Name	Step Name	Hourly	Bi-Weekly	Monthly	Annual
1117B	Electric Economic and Development Partnership Manager-B	Step A	75.1688	6013.50	13029.26	156351.10
		Step B	79.5198	6361.58	13783.43	165401.18
		Step C	81.9054	6552.43	14196.94	170363.23
		Step D	84.3625	6749.00	14622.83	175474.00
		Step E	86.8934	6951.47	15061.52	180738.27
		Step F	89.5003	7160.02	15513.39	186160.62
		Step G	92.1852	7374.82	15978.77	191745.22
		Step H	94.9509	7596.07	16458.16	197497.87
		Step I	97.7994	7823.95	16951.90	203422.75
		Step J	100.7333	8058.66	17460.44	209525.26

City of Roseville

Salary Schedule: Management-B

Appendix:E
Effective Date:08/24/2024

MGMT Management

Grade Code	Grade Name	Step Name	Hourly	Bi-Weekly	Monthly	Annual
2284B	Electric Engineering Technician Supervisor-B	Step A	63.9585	5116.68	11086.14	133033.68
		Step B	67.6605	5412.84	11727.82	140733.84
		Step C	69.6904	5575.23	12079.67	144956.03
		Step D	71.7811	5742.49	12442.06	149304.69
		Step E	73.9346	5914.77	12815.33	153783.97
		Step F	76.1525	6092.20	13199.77	158397.20
		Step G	78.4372	6274.98	13595.78	163149.38
		Step H	80.7903	6463.22	14003.65	168043.82
		Step I	83.2139	6657.11	14423.74	173084.91
		Step J	85.7104	6856.83	14856.47	178277.63

City of Roseville

Salary Schedule: Management-B

Appendix:E
Effective Date:08/24/2024

MGMT Management

Grade Code	Grade Name	Step Name	Hourly	Bi-Weekly	Monthly	Annual
2338B	Electric Operations Manager-B	Step A	97.7818	7822.54	16948.85	203386.14
		Step B	103.4418	8275.34	17929.91	215158.94
		Step C	106.5450	8523.60	18467.80	221613.60
		Step D	109.7414	8779.31	19021.84	228262.11
		Step E	113.0336	9042.69	19592.49	235109.89
		Step F	116.4246	9313.97	20180.26	242163.17
		Step G	119.9173	9593.38	20785.67	249427.98
		Step H	123.5148	9881.18	21409.23	256910.78
		Step I	127.2203	10177.62	22051.52	264618.22
		Step J	131.0368	10482.94	22713.05	272556.54

City of Roseville

Salary Schedule: Management-B

Appendix:E
Effective Date:08/24/2024

MGMT Management

Grade Code	Grade Name	Step Name	Hourly	Bi-Weekly	Monthly	Annual
2339B	Electric Operations Supervisor-B	Step A	88.8965	7111.72	15408.73	184904.72
		Step B	94.0422	7523.38	16300.65	195607.78
		Step C	96.8634	7749.07	16789.66	201475.87
		Step D	99.7693	7981.54	17293.35	207520.14
		Step E	102.7624	8220.99	17812.15	213745.79
		Step F	105.8453	8467.62	18346.52	220158.22
		Step G	109.0207	8721.66	18896.92	226763.06
		Step H	112.2913	8983.30	19463.83	233565.90
		Step I	115.6601	9252.81	20047.75	240573.01
		Step J	119.1298	9530.38	20649.17	247789.98

City of Roseville

Salary Schedule: Management-B

Appendix:E
Effective Date:08/24/2024

MGMT Management

Grade Code	Grade Name	Step Name	Hourly	Bi-Weekly	Monthly	Annual
2314B	Electric Resources Planner I-B	Step A	56.7179	4537.43	9831.10	117973.23
		Step B	60.0010	4800.08	10400.17	124802.08
		Step C	61.8011	4944.09	10712.19	128546.29
		Step D	63.6550	5092.40	11033.53	132402.40
		Step E	65.5648	5245.18	11364.57	136374.78
		Step F	67.5317	5402.54	11705.49	140465.94
		Step G	69.5577	5564.62	12056.67	144680.02
		Step H	71.6445	5731.56	12418.38	149020.56
		Step I	73.7937	5903.50	12790.91	153490.90
		Step J	76.0075	6080.60	13174.63	158095.60

City of Roseville

Salary Schedule: Management-B

Appendix:E
Effective Date:08/24/2024

MGMT Management

Grade Code	Grade Name	Step Name	Hourly	Bi-Weekly	Monthly	Annual
2316B	Electric Resources Planner II-B	Step A	62.3896	4991.17	10814.20	129770.37
		Step B	66.0012	5280.10	11440.21	137282.50
		Step C	67.9812	5438.50	11783.41	141400.90
		Step D	70.0206	5601.65	12136.90	145642.85
		Step E	72.1213	5769.70	12501.03	150012.30
		Step F	74.2849	5942.79	12876.05	154512.59
		Step G	76.5134	6121.07	13262.32	159147.87
		Step H	78.8089	6304.71	13660.21	163922.51
		Step I	81.1730	6493.84	14069.99	168839.84
		Step J	83.6083	6688.66	14492.11	173905.26

City of Roseville

Salary Schedule: Management-B

Appendix:E
Effective Date:08/24/2024

MGMT Management

Grade Code	Grade Name	Step Name	Hourly	Bi-Weekly	Monthly	Annual
2216B	Electric Risk and Compliance Supervisor-B	Step A	68.3314	5466.51	11844.11	142129.31
		Step B	72.2867	5782.94	12529.69	150356.34
		Step C	74.4552	5956.42	12905.57	154866.82
		Step D	76.6888	6135.10	13292.73	159512.70
		Step E	78.9896	6319.17	13691.53	164298.37
		Step F	81.3593	6508.74	14102.28	169227.34
		Step G	83.8000	6704.00	14525.33	174304.00
		Step H	86.3140	6905.12	14961.09	179533.12
		Step I	88.9034	7112.27	15409.92	184919.07
		Step J	91.5705	7325.64	15872.22	190466.64

City of Roseville

Salary Schedule: Management-B

Appendix:E
Effective Date:08/24/2024

MGMT Management

Grade Code	Grade Name	Step Name	Hourly	Bi-Weekly	Monthly	Annual
2352B	Electric Safety Coordinator-B	Step A	41.7429	3339.43	7235.44	86825.23
		Step B	44.1591	3532.73	7654.24	91850.93
		Step C	45.4838	3638.70	7883.86	94606.30
		Step D	46.8483	3747.86	8120.37	97444.46
		Step E	48.2538	3860.30	8363.99	100367.90
		Step F	49.7014	3976.11	8614.91	103378.91
		Step G	51.1924	4095.39	8873.35	106480.19
		Step H	52.7282	4218.26	9139.55	109674.66
		Step I	54.3101	4344.81	9413.75	112965.01
		Step J	55.9394	4475.15	9696.16	116353.95

City of Roseville

Salary Schedule: Management-B

Appendix:E
Effective Date:08/24/2024

MGMT Management

Grade Code	Grade Name	Step Name	Hourly	Bi-Weekly	Monthly	Annual
2319B	Electric Substation Supervisor-B	Step A	88.8965	7111.72	15408.73	184904.72
		Step B	94.0422	7523.38	16300.65	195607.78
		Step C	96.8634	7749.07	16789.66	201475.87
		Step D	99.7693	7981.54	17293.35	207520.14
		Step E	102.7624	8220.99	17812.15	213745.79
		Step F	105.8453	8467.62	18346.52	220158.22
		Step G	109.0207	8721.66	18896.92	226763.06
		Step H	112.2913	8983.30	19463.83	233565.90
		Step I	115.6601	9252.81	20047.75	240573.01
		Step J	119.1298	9530.38	20649.17	247789.98

City of Roseville

Salary Schedule: Management-B

Appendix:E
Effective Date:08/24/2024

MGMT Management

Grade Code	Grade Name	Step Name	Hourly	Bi-Weekly	Monthly	Annual
9560B	Electric Technology Systems Administrator-B	Step A	68.3353	5466.82	11844.79	142137.42
		Step B	72.2907	5783.26	12530.39	150364.66
		Step C	74.4595	5956.76	12906.31	154875.76
		Step D	76.6933	6135.46	13293.51	159522.06
		Step E	78.9941	6319.53	13692.31	164307.73
		Step F	81.3639	6509.11	14103.08	169236.91
		Step G	83.8049	6704.39	14526.18	174314.19
		Step H	86.3189	6905.51	14961.94	179543.31
		Step I	88.9085	7112.68	15410.81	184929.68
		Step J	91.5758	7326.06	15873.14	190477.66

City of Roseville

Salary Schedule: Management-B

Appendix:E
Effective Date:08/24/2024

MGMT Management

Grade Code	Grade Name	Step Name	Hourly	Bi-Weekly	Monthly	Annual
1116B	Electric Utility Chief Operating Officer-B	Step A	123.6941	9895.53	21440.31	257283.73
		Step B	130.8540	10468.32	22681.36	272176.32
		Step C	134.7797	10782.38	23361.81	280341.78
		Step D	138.8231	11105.85	24062.67	288752.05
		Step E	142.9878	11439.02	24784.55	297414.62
		Step F	147.2774	11782.19	25528.08	306336.99
		Step G	151.6957	12135.66	26293.92	315527.06
		Step H	156.2466	12499.73	27082.74	324992.93
		Step I	160.9340	12874.72	27895.23	334742.72
		Step J	165.7620	13260.96	28732.08	344784.96

City of Roseville

Salary Schedule: Management-B

Appendix:E
Effective Date:08/24/2024

MGMT Management

Grade Code	Grade Name	Step Name	Hourly	Bi-Weekly	Monthly	Annual
2320B	Electric Utility Director-B	Step A	140.5631	11245.05	24364.27	292371.25
		Step B	148.6995	11895.96	25774.58	309294.96
		Step C	153.1606	12252.85	26547.84	318574.05
		Step D	157.7554	12620.43	27344.27	328131.23
		Step E	162.4879	12999.03	28164.57	337974.83
		Step F	167.3627	13389.02	29009.53	348114.42
		Step G	172.3834	13790.67	29879.79	358557.47
		Step H	177.5550	14204.40	30776.20	369314.40
		Step I	182.8816	14630.53	31699.48	380393.73
		Step J	188.3681	15069.45	32650.47	391805.65

City of Roseville

Salary Schedule: Management-B

Appendix:E
Effective Date:08/24/2024

MGMT Management

Grade Code	Grade Name	Step Name	Hourly	Bi-Weekly	Monthly	Annual
2215B	Electric Utility Financial Administrator-B	Step A	68.3348	5466.78	11844.70	142136.38
		Step B	72.2903	5783.22	12530.32	150363.82
		Step C	74.4591	5956.73	12906.24	154874.93
		Step D	76.6928	6135.42	13293.42	159521.02
		Step E	78.9937	6319.50	13692.24	164306.90
		Step F	81.3634	6509.07	14102.99	169235.87
		Step G	83.8043	6704.34	14526.08	174312.94
		Step H	86.3184	6905.47	14961.86	179542.27
		Step I	88.9079	7112.63	15410.70	184928.43
		Step J	91.5752	7326.02	15873.03	190476.42

City of Roseville

Salary Schedule: Management-B

Appendix:E
Effective Date:08/24/2024

MGMT Management

Grade Code	Grade Name	Step Name	Hourly	Bi-Weekly	Monthly	Annual
2378B	Electronic Maintenance Coordinator-B	Step A	46.0454	3683.63	7981.20	95774.43
		Step B	48.7097	3896.78	8443.01	101316.18
		Step C	50.1710	4013.68	8696.31	104355.68
		Step D	51.6761	4134.09	8957.19	107486.29
		Step E	53.2263	4258.10	9225.89	110710.70
		Step F	54.8231	4385.85	9502.67	114032.05
		Step G	56.4679	4517.43	9787.77	117453.23
		Step H	58.1620	4652.96	10081.41	120976.96
		Step I	59.9068	4792.54	10383.85	124606.14
		Step J	61.7051	4936.41	10695.55	128346.61

City of Roseville

Salary Schedule: Management-B

Appendix:E
Effective Date:08/24/2024

MGMT Management

Grade Code	Grade Name	Step Name	Hourly	Bi-Weekly	Monthly	Annual
2500B	Energy Services Account Representative I-B	Step A	48.9290	3914.32	8481.03	101772.32
		Step B	51.7612	4140.90	8971.94	107663.30
		Step C	53.3140	4265.12	9241.09	110893.12
		Step D	54.9134	4393.07	9518.32	114219.87
		Step E	56.5608	4524.86	9803.87	117646.46
		Step F	58.2577	4660.62	10098.00	121176.02
		Step G	60.0054	4800.43	10400.94	124811.23
		Step H	61.8056	4944.45	10712.97	128555.65
		Step I	63.6597	5092.78	11034.35	132412.18
		Step J	65.5695	5245.56	11365.38	136384.56

City of Roseville

Salary Schedule: Management-B

Appendix:E
Effective Date:08/24/2024

MGMT Management

Grade Code	Grade Name	Step Name	Hourly	Bi-Weekly	Monthly	Annual
2501B	Energy Services Account Representative II-B	Step A	53.8220	4305.76	9329.15	111949.76
		Step B	56.9375	4555.00	9869.17	118430.00
		Step C	58.6456	4691.65	10165.24	121982.85
		Step D	60.4050	4832.40	10470.20	125642.40
		Step E	62.2171	4977.37	10784.30	129411.57
		Step F	64.0837	5126.70	11107.84	133294.10
		Step G	66.0061	5280.49	11441.06	137292.69
		Step H	67.9864	5438.91	11784.31	141411.71
		Step I	70.0259	5602.07	12137.82	145653.87
		Step J	72.1267	5770.14	12501.96	150023.54

City of Roseville

Salary Schedule: Management-B

Appendix:E
Effective Date:08/24/2024

MGMT Management

Grade Code	Grade Name	Step Name	Hourly	Bi-Weekly	Monthly	Annual
1277B	Engineering Manager-B	Step A	66.8492	5347.94	11587.19	139046.34
		Step B	70.7182	5657.46	12257.82	147093.86
		Step C	72.8398	5827.18	12625.57	151506.78
		Step D	75.0251	6002.01	13004.35	156052.21
		Step E	77.2759	6182.07	13394.49	160733.87
		Step F	79.5942	6367.54	13796.33	165555.94
		Step G	81.9819	6558.55	14210.20	170522.35
		Step H	84.4414	6755.31	14636.51	175638.11
		Step I	86.9746	6957.97	15075.60	180907.17
		Step J	89.5838	7166.70	15527.86	186334.30

City of Roseville

Salary Schedule: Management-B

Appendix:E
Effective Date:08/24/2024

MGMT Management

Grade Code	Grade Name	Step Name	Hourly	Bi-Weekly	Monthly	Annual
2540B	Environmental Coordinator-B	Step A	48.0045	3840.36	8320.78	99849.36
		Step B	50.7831	4062.65	8802.40	105628.85
		Step C	52.3067	4184.54	9066.49	108797.94
		Step D	53.8759	4310.07	9338.49	112061.87
		Step E	55.4922	4439.38	9618.65	115423.78
		Step F	57.1569	4572.55	9907.20	118886.35
		Step G	58.8715	4709.72	10204.39	122452.72
		Step H	60.6378	4851.02	10510.55	126126.62
		Step I	62.4568	4996.54	10825.85	129910.14
		Step J	64.3306	5146.45	11150.64	133807.65

City of Roseville

Salary Schedule: Management-B

Appendix:E
Effective Date:08/24/2024

MGMT Management

Grade Code	Grade Name	Step Name	Hourly	Bi-Weekly	Monthly	Annual
2546B	Environmental Utilities Business Analyst I-B	Step A	39.8435	3187.48	6906.21	82874.48
		Step B	42.1498	3371.98	7305.97	87671.58
		Step C	43.4143	3473.14	7525.15	90301.74
		Step D	44.7167	3577.34	7750.89	93010.74
		Step E	46.0582	3684.66	7983.42	95801.06
		Step F	47.4400	3795.20	8222.93	98675.20
		Step G	48.8632	3909.06	8469.62	101635.46
		Step H	50.3291	4026.33	8723.71	104684.53
		Step I	51.8390	4147.12	8985.43	107825.12
		Step J	53.3941	4271.53	9254.98	111059.73

City of Roseville

Salary Schedule: Management-B

Appendix:E
Effective Date:08/24/2024

MGMT Management

Grade Code	Grade Name	Step Name	Hourly	Bi-Weekly	Monthly	Annual
2547B	Environmental Utilities Business Analyst II-B	Step A	43.8288	3506.30	7596.99	91163.90
		Step B	46.3659	3709.27	8036.76	96441.07
		Step C	47.7568	3820.54	8277.85	99334.14
		Step D	49.1895	3935.16	8526.18	102314.16
		Step E	50.6652	4053.22	8781.97	105383.62
		Step F	52.1852	4174.82	9045.43	108545.22
		Step G	53.7507	4300.06	9316.79	111801.46
		Step H	55.3633	4429.06	9596.31	115155.66
		Step I	57.0241	4561.93	9884.18	118610.13
		Step J	58.7349	4698.79	10180.72	122168.59

City of Roseville

Salary Schedule: Management-B

Appendix:E
Effective Date:08/24/2024

MGMT Management

Grade Code	Grade Name	Step Name	Hourly	Bi-Weekly	Monthly	Annual
1122B	Environmental Utilities Business Services Manager-B	Step A	63.6319	5090.55	11029.53	132354.35
		Step B	67.3152	5385.22	11667.97	140015.62
		Step C	69.3347	5546.78	12018.01	144216.18
		Step D	71.4146	5713.17	12378.53	148542.37
		Step E	73.5571	5884.57	12749.90	152998.77
		Step F	75.7638	6061.10	13132.39	157588.70
		Step G	78.0369	6242.95	13526.40	162316.75
		Step H	80.3779	6430.23	13932.17	167186.03
		Step I	82.7893	6623.14	14350.15	172201.74
		Step J	85.2729	6821.83	14780.64	177367.63

City of Roseville

Salary Schedule: Management-B

Appendix:E
Effective Date:08/24/2024

MGMT Management

Grade Code	Grade Name	Step Name	Hourly	Bi-Weekly	Monthly	Annual
2541B	Environmental Utilities Compliance Administrator-B	Step A	50.0900	4007.20	8682.27	104187.20
		Step B	52.9891	4239.13	9184.78	110217.33
		Step C	54.5788	4366.30	9460.33	113523.90
		Step D	56.2163	4497.30	9744.16	116929.90
		Step E	57.9027	4632.22	10036.47	120437.62
		Step F	59.6398	4771.18	10337.57	124050.78
		Step G	61.4289	4914.31	10647.68	127772.11
		Step H	63.2719	5061.75	10967.13	131605.55
		Step I	65.1700	5213.60	11296.13	135553.60
		Step J	67.1251	5370.01	11635.02	139620.21

City of Roseville

Salary Schedule: Management-B

Appendix:E
Effective Date:08/24/2024

MGMT Management

Grade Code	Grade Name	Step Name	Hourly	Bi-Weekly	Monthly	Annual
1684B	Environmental Utilities Director-B	Step A	96.0927	7687.42	16656.07	199872.82
		Step B	101.6548	8132.38	17620.17	211441.98
		Step C	104.7045	8376.36	18148.78	217785.36
		Step D	107.8456	8627.65	18693.24	224318.85
		Step E	111.0809	8886.47	19254.02	231048.27
		Step F	114.4134	9153.07	19831.66	237979.87
		Step G	117.8458	9427.66	20426.61	245119.26
		Step H	121.3811	9710.49	21039.39	252472.69
		Step I	125.0227	10001.82	21670.60	260047.22
		Step J	128.7732	10301.86	22320.69	267848.26

City of Roseville

Salary Schedule: Management-B

Appendix:E
Effective Date:08/24/2024

MGMT Management

Grade Code	Grade Name	Step Name	Hourly	Bi-Weekly	Monthly	Annual
1024B	Environmental Utilities Maintenance Superintendent-B	Step A	58.2453	4659.62	10095.85	121150.22
		Step B	61.6174	4929.39	10680.35	128164.19
		Step C	63.4659	5077.27	11000.76	132009.07
		Step D	65.3699	5229.59	11330.78	135969.39
		Step E	67.3310	5386.48	11670.71	140048.48
		Step F	69.3509	5548.07	12020.82	144249.87
		Step G	71.4315	5714.52	12381.46	148577.52
		Step H	73.5744	5885.95	12752.90	153034.75
		Step I	75.7817	6062.54	13135.49	157625.94
		Step J	78.0551	6244.41	13529.55	162354.61

City of Roseville

Salary Schedule: Management-B

Appendix:E
Effective Date:08/24/2024

MGMT Management

Grade Code	Grade Name	Step Name	Hourly	Bi-Weekly	Monthly	Annual
1147B	Environmental Utilities Operations Superintendent-B	Step A	57.1887	4575.10	9912.71	118952.50
		Step B	60.4990	4839.92	10486.49	125837.92
		Step C	62.3139	4985.11	10801.08	129612.91
		Step D	64.1834	5134.67	11125.12	133501.47
		Step E	66.1089	5288.71	11458.88	137506.51
		Step F	68.0921	5447.37	11802.63	141631.57
		Step G	70.1349	5610.79	12156.72	145880.59
		Step H	72.2389	5779.11	12521.41	150256.91
		Step I	74.4061	5952.49	12897.06	154764.69
		Step J	76.6383	6131.06	13283.97	159407.66

City of Roseville

Salary Schedule: Management-B

Appendix:E
Effective Date:08/24/2024

MGMT Management

Grade Code	Grade Name	Step Name	Hourly	Bi-Weekly	Monthly	Annual
4321B	Facilities Supervisor-B	Step A	40.2709	3221.67	6980.29	83763.47
		Step B	42.6019	3408.15	7384.33	88611.95
		Step C	43.8800	3510.40	7605.87	91270.40
		Step D	45.1964	3615.71	7834.04	94008.51
		Step E	46.5523	3724.18	8069.07	96828.78
		Step F	47.9490	3835.92	8311.16	99733.92
		Step G	49.3873	3950.98	8560.47	102725.58
		Step H	50.8689	4069.51	8817.28	105807.31
		Step I	52.3950	4191.60	9081.80	108981.60
		Step J	53.9669	4317.35	9354.26	112251.15

City of Roseville

Salary Schedule: Management-B

Appendix:E
Effective Date:08/24/2024

MGMT Management

Grade Code	Grade Name	Step Name	Hourly	Bi-Weekly	Monthly	Annual
2900B	Finance Manager-B	Step A	62.8047	5024.38	10886.15	130633.78
		Step B	66.4401	5315.21	11516.28	138195.41
		Step C	68.4333	5474.66	11861.77	142341.26
		Step D	70.4862	5638.90	12217.61	146611.30
		Step E	72.6009	5808.07	12584.16	151009.87
		Step F	74.7789	5982.31	12961.68	155540.11
		Step G	77.0224	6161.79	13350.55	160206.59
		Step H	79.3330	6346.64	13751.05	165012.64
		Step I	81.7130	6537.04	14163.59	169963.04
		Step J	84.1643	6733.14	14588.48	175061.74

City of Roseville

Salary Schedule: Management-B

Appendix:E
Effective Date:08/24/2024

MGMT Management

Grade Code	Grade Name	Step Name	Hourly	Bi-Weekly	Monthly	Annual
0905ZB	Fire Battalion Chief 8Hr-ZB	Step A	61.5522	4924.18	10669.05	128028.58
		Step B	65.1108	5208.86	11285.87	135430.46
		Step C	67.0641	5365.13	11624.44	139493.33
		Step D	69.0761	5526.09	11973.19	143678.29
		Step E	71.1483	5691.86	12332.37	147988.46
		Step F	73.2828	5862.62	12702.35	152428.22
		Step G	75.4813	6038.50	13083.43	157001.10
		Step H	77.7457	6219.66	13475.92	161711.06
		Step I	80.0780	6406.24	13880.19	166562.24
		Step J	82.4855	6598.84	14297.49	171569.84

City of Roseville

Salary Schedule: Management-B

Appendix:E
Effective Date:08/24/2024

MGMT Management

Grade Code	Grade Name	Step Name	Hourly	Bi-Weekly	Monthly	Annual
0905B	Fire Battalion Chief-B	Step A	43.9657	4924.16	10669.01	128028.12
		Step B	46.5077	5208.86	11285.87	135430.42
		Step C	47.9031	5365.15	11624.49	139493.83
		Step D	49.3401	5526.09	11973.20	143678.37
		Step E	50.8204	5691.88	12332.42	147989.00
		Step F	52.3450	5862.64	12702.39	152428.64
		Step G	53.9152	6038.50	13083.42	157001.06
		Step H	55.5327	6219.66	13475.94	161711.22
		Step I	57.1986	6406.24	13880.19	166562.32
		Step J	58.9184	6598.86	14297.53	171570.38

City of Roseville

Salary Schedule: Management-B

Appendix:E
Effective Date:08/24/2024

MGMT Management

Grade Code	Grade Name	Step Name	Hourly	Bi-Weekly	Monthly	Annual
3330B	Fire Chief-B	Step A	89.2835	7142.68	15475.81	185709.68
		Step B	94.4513	7556.10	16371.56	196458.70
		Step C	97.2850	7782.80	16862.73	202352.80
		Step D	100.2035	8016.28	17368.61	208423.28
		Step E	103.2096	8256.77	17889.66	214675.97
		Step F	106.3059	8504.47	18426.36	221116.27
		Step G	109.4950	8759.60	18979.13	227749.60
		Step H	112.7799	9022.39	19548.52	234582.19
		Step I	116.1633	9293.06	20134.97	241619.66
		Step J	119.6482	9571.86	20739.02	248868.26

City of Roseville

Salary Schedule: Management-B

Appendix:E
Effective Date:08/24/2024

MGMT Management

Grade Code	Grade Name	Step Name	Hourly	Bi-Weekly	Monthly	Annual
3332B	Fire Division Chief-B	Step A	67.7097	5416.78	11736.35	140836.18
		Step B	71.6289	5730.31	12415.68	148988.11
		Step C	73.7778	5902.22	12788.15	153457.82
		Step D	75.9911	6079.29	13171.79	158061.49
		Step E	78.2708	6261.66	13566.94	162803.26
		Step F	80.6190	6449.52	13973.96	167687.52
		Step G	83.0376	6643.01	14393.18	172718.21
		Step H	85.5287	6842.30	14824.97	177899.70
		Step I	88.0945	7047.56	15269.71	183236.56
		Step J	90.7374	7258.99	15727.82	188733.79

City of Roseville

Salary Schedule: Management-B

Appendix:E
Effective Date:08/24/2024

MGMT Management

Grade Code	Grade Name	Step Name	Hourly	Bi-Weekly	Monthly	Annual
3332ZB	Fire Divison Chief 24Hr-ZB	Step A	48.3641	5416.78	11736.35	140836.26
		Step B	51.1634	5730.30	12415.65	148987.82
		Step C	52.6983	5902.21	12788.12	153457.45
		Step D	54.2793	6079.28	13171.78	158061.32
		Step E	55.9077	6261.66	13566.94	162803.22
		Step F	57.5849	6449.51	13973.94	167687.23
		Step G	59.3124	6642.99	14393.14	172717.71
		Step H	61.0917	6842.27	14824.92	177899.03
		Step I	62.9245	7047.54	15269.68	183236.14
		Step J	64.8123	7258.98	15727.78	188733.42

City of Roseville

Salary Schedule: Management-B

Appendix:E
Effective Date:08/24/2024

MGMT Management

Grade Code	Grade Name	Step Name	Hourly	Bi-Weekly	Monthly	Annual
2565B	Fleet Services Supervisor-B	Step A	40.0219	3201.75	6937.13	83245.55
		Step B	42.3385	3387.08	7338.67	88064.08
		Step C	43.6087	3488.70	7558.84	90706.10
		Step D	44.9170	3593.36	7785.61	93427.36
		Step E	46.2644	3701.15	8019.16	96229.95
		Step F	47.6523	3812.18	8259.73	99116.78
		Step G	49.0819	3926.55	8507.53	102090.35
		Step H	50.5544	4044.35	8762.76	105153.15
		Step I	52.0710	4165.68	9025.64	108307.68
		Step J	53.6332	4290.66	9296.42	111557.06

City of Roseville

Salary Schedule: Management-B

Appendix:E
Effective Date:08/24/2024

MGMT Management

Grade Code	Grade Name	Step Name	Hourly	Bi-Weekly	Monthly	Annual
3451B	Government Relations Administrator-B	Step A	57.6027	4608.22	9984.47	119813.62
		Step B	60.9368	4874.94	10562.38	126748.54
		Step C	62.7649	5021.19	10879.25	130550.99
		Step D	64.6479	5171.83	11205.64	134467.63
		Step E	66.5873	5326.98	11541.80	138501.58
		Step F	68.5850	5486.80	11888.07	142656.80
		Step G	70.6424	5651.39	12244.68	146936.19
		Step H	72.7618	5820.94	12612.05	151344.54
		Step I	74.9446	5995.57	12990.40	155884.77
		Step J	77.1930	6175.44	13380.12	160561.44

City of Roseville

Salary Schedule: Management-B

Appendix:E
Effective Date:08/24/2024

MGMT Management

Grade Code	Grade Name	Step Name	Hourly	Bi-Weekly	Monthly	Annual
1647B	Government Relations Representative I-B	Step A	37.9480	3035.84	6577.65	78931.84
		Step B	40.1445	3211.56	6958.38	83500.56
		Step C	41.3490	3307.92	7167.16	86005.92
		Step D	42.5894	3407.15	7382.16	88585.95
		Step E	43.8670	3509.36	7603.61	91243.36
		Step F	45.1830	3614.64	7831.72	93980.64
		Step G	46.5386	3723.09	8066.69	96800.29
		Step H	47.9347	3834.78	8308.68	99704.18
		Step I	49.3728	3949.82	8557.95	102695.42
		Step J	50.8539	4068.31	8814.68	105776.11

City of Roseville

Salary Schedule: Management-B

Appendix:E
Effective Date:08/24/2024

MGMT Management

Grade Code	Grade Name	Step Name	Hourly	Bi-Weekly	Monthly	Annual
1648B	Government Relations Representative II-B	Step A	41.7430	3339.44	7235.45	86825.44
		Step B	44.1591	3532.73	7654.24	91850.93
		Step C	45.4838	3638.70	7883.86	94606.30
		Step D	46.8483	3747.86	8120.37	97444.46
		Step E	48.2538	3860.30	8363.99	100367.90
		Step F	49.7014	3976.11	8614.91	103378.91
		Step G	51.1924	4095.39	8873.35	106480.19
		Step H	52.7282	4218.26	9139.55	109674.66
		Step I	54.3101	4344.81	9413.75	112965.01
		Step J	55.9394	4475.15	9696.16	116353.95

City of Roseville

Salary Schedule: Management-B

Appendix:E
Effective Date:08/24/2024

MGMT Management

Grade Code	Grade Name	Step Name	Hourly	Bi-Weekly	Monthly	Annual
3589B	Housing Manager-B	Step A	56.4726	4517.81	9788.58	117463.01
		Step B	59.7438	4779.50	10355.59	124267.10
		Step C	61.5360	4922.88	10666.24	127994.88
		Step D	63.3821	5070.57	10986.23	131834.77
		Step E	65.2836	5222.69	11315.82	135789.89
		Step F	67.2420	5379.36	11655.28	139863.36
		Step G	69.2593	5540.74	12004.95	144059.34
		Step H	71.3370	5706.96	12365.08	148380.96
		Step I	73.4773	5878.18	12736.07	152832.78
		Step J	75.6814	6054.51	13118.11	157417.31

City of Roseville

Salary Schedule: Management-B

Appendix:E
Effective Date:08/24/2024

MGMT Management

Grade Code	Grade Name	Step Name	Hourly	Bi-Weekly	Monthly	Annual
3590B	Housing Supervisor-B	Step A	43.6423	3491.38	7564.67	90775.98
		Step B	46.1684	3693.47	8002.52	96030.27
		Step C	47.5535	3804.28	8242.61	98911.28
		Step D	48.9801	3918.41	8489.88	101878.61
		Step E	50.4495	4035.96	8744.58	104934.96
		Step F	51.9630	4157.04	9006.92	108083.04
		Step G	53.5219	4281.75	9277.13	111325.55
		Step H	55.1275	4410.20	9555.43	114665.20
		Step I	56.7813	4542.50	9842.09	118105.10
		Step J	58.4848	4678.78	10137.37	121648.38

City of Roseville

Salary Schedule: Management-B

Appendix:E
Effective Date:08/24/2024

MGMT Management

Grade Code	Grade Name	Step Name	Hourly	Bi-Weekly	Monthly	Annual
3594B	Human Resources Analyst I-B	Step A	38.9323	3114.58	6748.27	80979.18
		Step B	41.1859	3294.87	7138.89	85666.67
		Step C	42.4214	3393.71	7353.04	88236.51
		Step D	43.6941	3495.53	7573.64	90883.73
		Step E	45.0049	3600.39	7800.85	93610.19
		Step F	46.3551	3708.41	8034.88	96418.61
		Step G	47.7458	3819.66	8275.94	99311.26
		Step H	49.1781	3934.25	8524.20	102290.45
		Step I	50.6534	4052.27	8779.92	105359.07
		Step J	52.1730	4173.84	9043.32	108519.84

City of Roseville

Salary Schedule: Management-B

Appendix:E
Effective Date:08/24/2024

MGMT Management

Grade Code	Grade Name	Step Name	Hourly	Bi-Weekly	Monthly	Annual
3596B	Human Resources Analyst II-B	Step A	42.8255	3426.04	7423.09	89077.04
		Step B	45.3044	3624.35	7852.76	94233.15
		Step C	46.6634	3733.07	8088.32	97059.87
		Step D	48.0634	3845.07	8330.99	99971.87
		Step E	49.5054	3960.43	8580.94	102971.23
		Step F	50.9904	4079.23	8838.34	106060.03
		Step G	52.5202	4201.62	9103.50	109242.02
		Step H	54.0959	4327.67	9376.62	112519.47
		Step I	55.7187	4457.50	9657.91	115894.90
		Step J	57.3903	4591.22	9947.65	119371.82

City of Roseville

Salary Schedule: Management-B

Appendix:E
Effective Date:08/24/2024

MGMT Management

Grade Code	Grade Name	Step Name	Hourly	Bi-Weekly	Monthly	Annual
3598B	Human Resources Director-B	Step A	81.4310	6514.48	14114.71	169376.48
		Step B	86.1446	6891.57	14931.73	179180.77
		Step C	88.7290	7098.32	15379.69	184556.32
		Step D	91.3908	7311.26	15841.07	190092.86
		Step E	94.1325	7530.60	16316.30	195795.60
		Step F	96.9565	7756.52	16805.79	201669.52
		Step G	99.8652	7989.22	17309.97	207719.62
		Step H	102.8611	8228.89	17829.26	213951.09
		Step I	105.9469	8475.75	18364.13	220369.55
		Step J	109.1254	8730.03	18915.07	226980.83

City of Roseville

Salary Schedule: Management-B

Appendix:E
Effective Date:08/24/2024

MGMT Management

Grade Code	Grade Name	Step Name	Hourly	Bi-Weekly	Monthly	Annual
3599B	Human Resources Manager-B	Step A	54.1735	4333.88	9390.07	112680.88
		Step B	57.3096	4584.77	9933.66	119203.97
		Step C	59.0289	4722.31	10231.68	122780.11
		Step D	60.7997	4863.98	10538.61	126463.38
		Step E	62.6237	5009.90	10854.77	130257.30
		Step F	64.5024	5160.19	11180.42	134164.99
		Step G	66.4375	5315.00	11515.83	138190.00
		Step H	68.4306	5474.45	11861.30	142335.65
		Step I	70.4835	5638.68	12217.14	146605.68
		Step J	72.5981	5807.85	12583.67	151004.05

City of Roseville

Salary Schedule: Management-B

Appendix:E
Effective Date:08/24/2024

MGMT Management

Grade Code	Grade Name	Step Name	Hourly	Bi-Weekly	Monthly	Annual
1002B	Hydrogeologist-B	Step A	59.4196	4753.57	10299.40	123592.77
		Step B	62.8589	5028.71	10895.54	130746.51
		Step C	64.7446	5179.57	11222.40	134668.77
		Step D	66.6871	5334.97	11559.10	138709.17
		Step E	68.6876	5495.01	11905.85	142870.21
		Step F	70.7483	5659.86	12263.04	147156.46
		Step G	72.8707	5829.66	12630.92	151571.06
		Step H	75.0568	6004.54	13009.85	156118.14
		Step I	77.3085	6184.68	13400.14	160801.68
		Step J	79.6278	6370.22	13802.15	165625.82

City of Roseville

Salary Schedule: Management-B

Appendix:E
Effective Date:08/24/2024

MGMT Management

Grade Code	Grade Name	Step Name	Hourly	Bi-Weekly	Monthly	Annual
3625B	Information Security Administrator-B	Step A	54.7221	4377.77	9485.16	113821.97
		Step B	57.8897	4631.18	10034.21	120410.58
		Step C	59.6263	4770.10	10335.23	124022.70
		Step D	61.4152	4913.22	10645.30	127743.62
		Step E	63.2576	5060.61	10964.65	131575.81
		Step F	65.1552	5212.42	11293.57	135522.82
		Step G	67.1099	5368.79	11632.38	139588.59
		Step H	69.1233	5529.86	11981.37	143776.46
		Step I	71.1970	5695.76	12340.81	148089.76
		Step J	73.3330	5866.64	12711.05	152532.64

City of Roseville

Salary Schedule: Management-B

Appendix:E
Effective Date:08/24/2024

MGMT Management

Grade Code	Grade Name	Step Name	Hourly	Bi-Weekly	Monthly	Annual
9542B	Information Technology Client Services Supervisor-B	Step A	47.7791	3822.33	8281.71	99380.53
		Step B	50.5448	4043.58	8761.10	105133.18
		Step C	52.0612	4164.90	9023.94	108287.30
		Step D	53.6229	4289.83	9294.64	111535.63
		Step E	55.2317	4418.54	9573.49	114881.94
		Step F	56.8887	4551.10	9860.71	118328.50
		Step G	58.5952	4687.62	10156.50	121878.02
		Step H	60.3532	4828.26	10461.22	125534.66
		Step I	62.1638	4973.10	10775.06	129300.70
		Step J	64.0287	5122.30	11098.31	133179.70

City of Roseville

Salary Schedule: Management-B

Appendix:E
Effective Date:08/24/2024

MGMT Management

Grade Code	Grade Name	Step Name	Hourly	Bi-Weekly	Monthly	Annual
3602B	Information Technology Program Manager-B	Step A	54.7230	4377.84	9485.32	113823.84
		Step B	57.8904	4631.23	10034.34	120412.03
		Step C	59.6271	4770.17	10335.36	124024.37
		Step D	61.4158	4913.26	10645.41	127744.86
		Step E	63.2583	5060.66	10964.77	131577.26
		Step F	65.1561	5212.49	11293.72	135524.69
		Step G	67.1108	5368.86	11632.54	139590.46
		Step H	69.1241	5529.93	11981.51	143778.13
		Step I	71.1978	5695.82	12340.95	148091.42
		Step J	73.3338	5866.70	12711.19	152534.30

City of Roseville

Salary Schedule: Management-B

Appendix:E
Effective Date:08/24/2024

MGMT Management

Grade Code	Grade Name	Step Name	Hourly	Bi-Weekly	Monthly	Annual
1140B	Intelligent Transportation Systems Maintenance Supervisor-B	Step A	58.2457	4659.66	10095.92	121151.06
		Step B	61.6172	4929.38	10680.31	128163.78
		Step C	63.4657	5077.26	11000.72	132008.66
		Step D	65.3697	5229.58	11330.75	135968.98
		Step E	67.3308	5386.46	11670.67	140048.06
		Step F	69.3507	5548.06	12020.79	144249.46
		Step G	71.4313	5714.50	12381.43	148577.10
		Step H	73.5742	5885.94	12752.86	153034.34
		Step I	75.7814	6062.51	13135.44	157625.31
		Step J	78.0549	6244.39	13529.52	162354.19

City of Roseville

Salary Schedule: Management-B

Appendix:E
Effective Date:08/24/2024

MGMT Management

Grade Code	Grade Name	Step Name	Hourly	Bi-Weekly	Monthly	Annual
3810B	Key Accounts Representative-B	Step A	59.2013	4736.10	10261.56	123138.70
		Step B	62.6282	5010.26	10855.55	130266.66
		Step C	64.5071	5160.57	11181.23	134174.77
		Step D	66.4422	5315.38	11516.65	138199.78
		Step E	68.4356	5474.85	11862.17	142346.05
		Step F	70.4886	5639.09	12218.02	146616.29
		Step G	72.6032	5808.26	12584.55	151014.66
		Step H	74.7813	5982.50	12962.09	155545.10
		Step I	77.0248	6161.98	13350.97	160211.58
		Step J	79.3355	6346.84	13751.49	165017.84

City of Roseville

Salary Schedule: Management-B

Appendix:E
Effective Date:08/24/2024

MGMT Management

Grade Code	Grade Name	Step Name	Hourly	Bi-Weekly	Monthly	Annual
9544B	Library Supervisor-B	Step A	35.1205	2809.64	6087.55	73050.64
		Step B	37.1538	2972.30	6439.99	77279.90
		Step C	38.2684	3061.47	6633.19	79598.27
		Step D	39.4164	3153.31	6832.18	81986.11
		Step E	40.5989	3247.91	7037.14	84445.71
		Step F	41.8169	3345.35	7248.26	86979.15
		Step G	43.0714	3445.71	7465.71	89588.51
		Step H	44.3635	3549.08	7689.67	92276.08
		Step I	45.6944	3655.55	7920.36	95044.35
		Step J	47.0653	3765.22	8157.99	97895.82

City of Roseville

Salary Schedule: Management-B

Appendix:E
Effective Date:08/24/2024

MGMT Management

Grade Code	Grade Name	Step Name	Hourly	Bi-Weekly	Monthly	Annual
4449B	Management Analyst - City Manager Office-B	Step A	43.8300	3506.40	7597.20	91166.40
		Step B	46.3669	3709.35	8036.93	96443.15
		Step C	47.7578	3820.62	8278.02	99336.22
		Step D	49.1906	3935.25	8526.37	102316.45
		Step E	50.6664	4053.31	8782.18	105386.11
		Step F	52.1863	4174.90	9045.63	108547.50
		Step G	53.7519	4300.15	9317.00	111803.95
		Step H	55.3645	4429.16	9596.51	115158.16
		Step I	57.0254	4562.03	9884.40	118612.83
		Step J	58.7362	4698.90	10180.94	122171.30

City of Roseville

Salary Schedule: Management-B

Appendix:E
Effective Date:08/24/2024

MGMT Management

Grade Code	Grade Name	Step Name	Hourly	Bi-Weekly	Monthly	Annual
0045B	Management Analyst I-B	Step A	37.9480	3035.84	6577.65	78931.84
		Step B	40.1445	3211.56	6958.38	83500.56
		Step C	41.3490	3307.92	7167.16	86005.92
		Step D	42.5894	3407.15	7382.16	88585.95
		Step E	43.8670	3509.36	7603.61	91243.36
		Step F	45.1830	3614.64	7831.72	93980.64
		Step G	46.5386	3723.09	8066.69	96800.29
		Step H	47.9347	3834.78	8308.68	99704.18
		Step I	49.3728	3949.82	8557.95	102695.42
		Step J	50.8539	4068.31	8814.68	105776.11

City of Roseville

Salary Schedule: Management-B

Appendix:E
Effective Date:08/24/2024

MGMT Management

Grade Code	Grade Name	Step Name	Hourly	Bi-Weekly	Monthly	Annual
0050B	Management Analyst II-B	Step A	41.7430	3339.44	7235.45	86825.44
		Step B	44.1591	3532.73	7654.24	91850.93
		Step C	45.4838	3638.70	7883.86	94606.30
		Step D	46.8483	3747.86	8120.37	97444.46
		Step E	48.2538	3860.30	8363.99	100367.90
		Step F	49.7014	3976.11	8614.91	103378.91
		Step G	51.1924	4095.39	8873.35	106480.19
		Step H	52.7282	4218.26	9139.55	109674.66
		Step I	54.3101	4344.81	9413.75	112965.01
		Step J	55.9394	4475.15	9696.16	116353.95

City of Roseville

Salary Schedule: Management-B

Appendix:E
Effective Date:08/24/2024

MGMT Management

Grade Code	Grade Name	Step Name	Hourly	Bi-Weekly	Monthly	Annual
5020B	Park Development Project Manager I-B	Step A	37.9480	3035.84	6577.65	78931.84
		Step B	40.1445	3211.56	6958.38	83500.56
		Step C	41.3490	3307.92	7167.16	86005.92
		Step D	42.5894	3407.15	7382.16	88585.95
		Step E	43.8670	3509.36	7603.61	91243.36
		Step F	45.1830	3614.64	7831.72	93980.64
		Step G	46.5386	3723.09	8066.69	96800.29
		Step H	47.9347	3834.78	8308.68	99704.18
		Step I	49.3728	3949.82	8557.95	102695.42
		Step J	50.8539	4068.31	8814.68	105776.11

City of Roseville

Salary Schedule: Management-B

Appendix:E
Effective Date:08/24/2024

MGMT Management

Grade Code	Grade Name	Step Name	Hourly	Bi-Weekly	Monthly	Annual
5022B	Park Development Project Manager II-B	Step A	41.7430	3339.44	7235.45	86825.44
		Step B	44.1591	3532.73	7654.24	91850.93
		Step C	45.4838	3638.70	7883.86	94606.30
		Step D	46.8483	3747.86	8120.37	97444.46
		Step E	48.2538	3860.30	8363.99	100367.90
		Step F	49.7014	3976.11	8614.91	103378.91
		Step G	51.1924	4095.39	8873.35	106480.19
		Step H	52.7282	4218.26	9139.55	109674.66
		Step I	54.3101	4344.81	9413.75	112965.01
		Step J	55.9394	4475.15	9696.16	116353.95

City of Roseville

Salary Schedule: Management-B

Appendix:E
Effective Date:08/24/2024

MGMT Management

Grade Code	Grade Name	Step Name	Hourly	Bi-Weekly	Monthly	Annual
1106B	Park Planning and Development Manager-B	Step A	52.8062	4224.50	9153.07	109836.90
		Step B	55.8634	4469.07	9682.99	116195.87
		Step C	57.5395	4603.16	9973.51	119682.16
		Step D	59.2656	4741.25	10272.70	123272.45
		Step E	61.0435	4883.48	10580.87	126970.48
		Step F	62.8749	5029.99	10898.32	130779.79
		Step G	64.7610	5180.88	11225.24	134702.88
		Step H	66.7039	5336.31	11562.01	138744.11
		Step I	68.7051	5496.41	11908.88	142906.61
		Step J	70.7662	5661.30	12266.14	147193.70

City of Roseville

Salary Schedule: Management-B

Appendix:E
Effective Date:08/24/2024

MGMT Management

Grade Code	Grade Name	Step Name	Hourly	Bi-Weekly	Monthly	Annual
5082B	Parks Recreation and Libraries Director-B	Step A	85.5031	6840.25	14820.54	177846.45
		Step B	90.4523	7236.18	15678.40	188140.78
		Step C	93.1658	7453.26	16148.74	193784.86
		Step D	95.9608	7676.86	16633.21	199598.46
		Step E	98.8396	7907.17	17132.20	205586.37
		Step F	101.8049	8144.39	17646.18	211754.19
		Step G	104.8590	8388.72	18175.56	218106.72
		Step H	108.0048	8640.38	18720.83	224649.98
		Step I	111.2449	8899.59	19282.45	231389.39
		Step J	114.5823	9166.58	19860.93	238331.18

City of Roseville

Salary Schedule: Management-B

Appendix:E
Effective Date:08/24/2024

MGMT Management

Grade Code	Grade Name	Step Name	Hourly	Bi-Weekly	Monthly	Annual
9547B	Parks Recreation and Libraries Manager-B	Step A	52.8062	4224.50	9153.07	109836.90
		Step B	55.8634	4469.07	9682.99	116195.87
		Step C	57.5395	4603.16	9973.51	119682.16
		Step D	59.2656	4741.25	10272.70	123272.45
		Step E	61.0435	4883.48	10580.87	126970.48
		Step F	62.8749	5029.99	10898.32	130779.79
		Step G	64.7610	5180.88	11225.24	134702.88
		Step H	66.7039	5336.31	11562.01	138744.11
		Step I	68.7051	5496.41	11908.88	142906.61
		Step J	70.7662	5661.30	12266.14	147193.70

City of Roseville

Salary Schedule: Management-B

Appendix:E
Effective Date:08/24/2024

MGMT Management

Grade Code	Grade Name	Step Name	Hourly	Bi-Weekly	Monthly	Annual
9546B	Parks and Open Space Superintendent-B	Step A	45.9191	3673.53	7959.31	95511.73
		Step B	48.5770	3886.16	8420.01	101040.16
		Step C	50.0343	4002.74	8672.61	104071.34
		Step D	51.5352	4122.82	8932.77	107193.22
		Step E	53.0813	4246.50	9200.76	110409.10
		Step F	54.6738	4373.90	9476.79	113721.50
		Step G	56.3140	4505.12	9761.09	117133.12
		Step H	58.0034	4640.27	10053.92	120647.07
		Step I	59.7436	4779.49	10355.56	124266.69
		Step J	61.5358	4922.86	10666.21	127994.46

City of Roseville

Salary Schedule: Management-B

Appendix:E
Effective Date:08/24/2024

MGMT Management

Grade Code	Grade Name	Step Name	Hourly	Bi-Weekly	Monthly	Annual
5069B	Parks and Open Space Supervisor-B	Step A	38.0204	3041.63	6590.20	79082.43
		Step B	40.2215	3217.72	6971.73	83660.72
		Step C	41.4282	3314.26	7180.89	86170.66
		Step D	42.6710	3413.68	7396.31	88755.68
		Step E	43.9512	3516.10	7618.21	91418.50
		Step F	45.2696	3621.57	7846.73	94160.77
		Step G	46.6277	3730.22	8082.13	96985.62
		Step H	48.0266	3842.13	8324.61	99895.33
		Step I	49.4674	3957.39	8574.35	102892.19
		Step J	50.9514	4076.11	8831.58	105978.91

City of Roseville

Salary Schedule: Management-B

Appendix:E
Effective Date:08/24/2024

MGMT Management

Grade Code	Grade Name	Step Name	Hourly	Bi-Weekly	Monthly	Annual
1124B	Payroll Analyst I-B	Step A	37.9480	3035.84	6577.65	78931.84
		Step B	40.1445	3211.56	6958.38	83500.56
		Step C	41.3490	3307.92	7167.16	86005.92
		Step D	42.5894	3407.15	7382.16	88585.95
		Step E	43.8670	3509.36	7603.61	91243.36
		Step F	45.1830	3614.64	7831.72	93980.64
		Step G	46.5386	3723.09	8066.69	96800.29
		Step H	47.9347	3834.78	8308.68	99704.18
		Step I	49.3728	3949.82	8557.95	102695.42
		Step J	50.8539	4068.31	8814.68	105776.11

City of Roseville

Salary Schedule: Management-B

Appendix:E
Effective Date:08/24/2024

MGMT Management

Grade Code	Grade Name	Step Name	Hourly	Bi-Weekly	Monthly	Annual
1125B	Payroll Analyst II-B	Step A	41.7430	3339.44	7235.45	86825.44
		Step B	44.1591	3532.73	7654.24	91850.93
		Step C	45.4838	3638.70	7883.86	94606.30
		Step D	46.8483	3747.86	8120.37	97444.46
		Step E	48.2538	3860.30	8363.99	100367.90
		Step F	49.7014	3976.11	8614.91	103378.91
		Step G	51.1924	4095.39	8873.35	106480.19
		Step H	52.7282	4218.26	9139.55	109674.66
		Step I	54.3101	4344.81	9413.75	112965.01
		Step J	55.9394	4475.15	9696.16	116353.95

City of Roseville

Salary Schedule: Management-B

Appendix:E
Effective Date:08/24/2024

MGMT Management

Grade Code	Grade Name	Step Name	Hourly	Bi-Weekly	Monthly	Annual
9428B	Payroll Supervisor-B	Step A	49.6233	3969.86	8601.37	103216.46
		Step B	52.4956	4199.65	9099.24	109190.85
		Step C	54.0705	4325.64	9372.22	112466.64
		Step D	55.6926	4455.41	9653.38	115840.61
		Step E	57.3634	4589.07	9942.99	119315.87
		Step F	59.0843	4726.74	10241.28	122895.34
		Step G	60.8568	4868.54	10548.51	126582.14
		Step H	62.6825	5014.60	10864.97	130379.60
		Step I	64.5630	5165.04	11190.92	134291.04
		Step J	66.4999	5319.99	11526.65	138319.79

City of Roseville

Salary Schedule: Management-B

Appendix:E
Effective Date:08/24/2024

MGMT Management

Grade Code	Grade Name	Step Name	Hourly	Bi-Weekly	Monthly	Annual
1501B	Permits Supervisor-B	Step A	41.7430	3339.44	7235.45	86825.44
		Step B	44.1591	3532.73	7654.24	91850.93
		Step C	45.4838	3638.70	7883.86	94606.30
		Step D	46.8483	3747.86	8120.37	97444.46
		Step E	48.2538	3860.30	8363.99	100367.90
		Step F	49.7014	3976.11	8614.91	103378.91
		Step G	51.1924	4095.39	8873.35	106480.19
		Step H	52.7282	4218.26	9139.55	109674.66
		Step I	54.3101	4344.81	9413.75	112965.01
		Step J	55.9394	4475.15	9696.16	116353.95

City of Roseville

Salary Schedule: Management-B

Appendix:E
Effective Date:08/24/2024

MGMT Management

Grade Code	Grade Name	Step Name	Hourly	Bi-Weekly	Monthly	Annual
5309B	Planning Manager-B	Step A	66.4534	5316.27	11518.59	138223.07
		Step B	70.3000	5624.00	12185.33	146224.00
		Step C	72.4090	5792.72	12550.89	150610.72
		Step D	74.5812	5966.50	12927.41	155128.90
		Step E	76.8187	6145.50	13315.24	159782.90
		Step F	79.1232	6329.86	13714.69	164576.26
		Step G	81.4970	6519.76	14126.15	169513.76
		Step H	83.9419	6715.35	14549.93	174599.15
		Step I	86.4601	6916.81	14986.42	179837.01
		Step J	89.0539	7124.31	15436.01	185232.11

City of Roseville

Salary Schedule: Management-B

Appendix:E
Effective Date:08/24/2024

MGMT Management

Grade Code	Grade Name	Step Name	Hourly	Bi-Weekly	Monthly	Annual
5400B	Police Captain-B	Step A	75.3795	6030.36	13065.78	156789.36
		Step B	79.7427	6379.42	13822.07	165864.82
		Step C	82.1350	6570.80	14236.73	170840.80
		Step D	84.5991	6767.93	14663.84	175966.13
		Step E	87.1371	6970.97	15103.76	181245.17
		Step F	89.7512	7180.10	15556.87	186682.50
		Step G	92.4437	7395.50	16023.57	192282.90
		Step H	95.2169	7617.35	16504.26	198051.15
		Step I	98.0735	7845.88	16999.41	203992.88
		Step J	101.0157	8081.26	17509.39	210112.66

City of Roseville

Salary Schedule: Management-B

Appendix:E
Effective Date:08/24/2024

MGMT Management

Grade Code	Grade Name	Step Name	Hourly	Bi-Weekly	Monthly	Annual
5410B	Police Chief-B	Step A	98.5831	7886.65	17087.74	205052.85
		Step B	104.2896	8343.17	18076.86	216922.37
		Step C	107.4183	8593.46	18619.17	223430.06
		Step D	110.6407	8851.26	19177.72	230132.66
		Step E	113.9600	9116.80	19753.07	237036.80
		Step F	117.3788	9390.30	20345.66	244147.90
		Step G	120.9002	9672.02	20956.03	251472.42
		Step H	124.5273	9962.18	21584.73	259016.78
		Step I	128.2630	10261.04	22232.25	266787.04
		Step J	132.1109	10568.87	22899.22	274790.67

City of Roseville

Salary Schedule: Management-B

Appendix:E
Effective Date:08/24/2024

MGMT Management

Grade Code	Grade Name	Step Name	Hourly	Bi-Weekly	Monthly	Annual
5420B	Police Lieutenant-B	Step A	62.8195	5025.56	10888.71	130664.56
		Step B	66.4559	5316.47	11519.02	138228.27
		Step C	68.4496	5475.97	11864.60	142375.17
		Step D	70.5031	5640.25	12220.54	146646.45
		Step E	72.6182	5809.46	12587.15	151045.86
		Step F	74.7967	5983.74	12964.76	155577.14
		Step G	77.0405	6163.24	13353.69	160244.24
		Step H	79.3518	6348.14	13754.31	165051.74
		Step I	81.7324	6538.59	14166.95	170003.39
		Step J	84.1844	6734.75	14591.96	175103.55

City of Roseville

Salary Schedule: Management-B

Appendix:E
Effective Date:08/24/2024

MGMT Management

Grade Code	Grade Name	Step Name	Hourly	Bi-Weekly	Monthly	Annual
5489B	Police Services Administrator-B	Step A	55.9340	4474.72	9695.23	116342.72
		Step B	59.1716	4733.73	10256.41	123076.93
		Step C	60.9468	4875.74	10564.11	126769.34
		Step D	62.7753	5022.02	10881.05	130572.62
		Step E	64.6585	5172.68	11207.47	134489.68
		Step F	66.5983	5327.86	11543.71	138524.46
		Step G	68.5962	5487.70	11890.01	142680.10
		Step H	70.6542	5652.34	12246.73	146960.74
		Step I	72.7738	5821.90	12614.13	151369.50
		Step J	74.9570	5996.56	12992.55	155910.56

City of Roseville

Salary Schedule: Management-B

Appendix:E
Effective Date:08/24/2024

MGMT Management

Grade Code	Grade Name	Step Name	Hourly	Bi-Weekly	Monthly	Annual
1138B	Police Social Services Practitioner I-B	Step A	35.3582	2828.66	6128.75	73545.06
		Step B	37.4049	2992.39	6483.52	77802.19
		Step C	38.5270	3082.16	6678.01	80136.16
		Step D	39.6828	3174.62	6878.35	82540.22
		Step E	40.8733	3269.86	7084.71	85016.46
		Step F	42.0995	3367.96	7297.25	87566.96
		Step G	43.3625	3469.00	7516.17	90194.00
		Step H	44.6634	3573.07	7741.66	92899.87
		Step I	46.0033	3680.26	7973.91	95686.86
		Step J	47.3834	3790.67	8213.12	98557.47

City of Roseville

Salary Schedule: Management-B

Appendix:E
Effective Date:08/24/2024

MGMT Management

Grade Code	Grade Name	Step Name	Hourly	Bi-Weekly	Monthly	Annual
1139B	Police Social Services Practitioner II-B	Step A	38.8940	3111.52	6741.63	80899.52
		Step B	41.1454	3291.63	7131.87	85582.43
		Step C	42.3797	3390.38	7345.81	88149.78
		Step D	43.6511	3492.09	7566.19	90794.29
		Step E	44.9606	3596.85	7793.17	93518.05
		Step F	46.3095	3704.76	8026.98	96323.76
		Step G	47.6987	3815.90	8267.77	99213.30
		Step H	49.1297	3930.38	8515.81	102189.78
		Step I	50.6036	4048.29	8771.29	105255.49
		Step J	52.1217	4169.74	9034.43	108413.14

City of Roseville

Salary Schedule: Management-B

Appendix:E
Effective Date:08/24/2024

MGMT Management

Grade Code	Grade Name	Step Name	Hourly	Bi-Weekly	Monthly	Annual
1126B	Police Social Services Supervisor-B	Step A	44.7281	3578.25	7752.87	93034.45
		Step B	47.3172	3785.38	8201.65	98419.78
		Step C	48.7367	3898.94	8447.69	101372.34
		Step D	50.1987	4015.90	8701.11	104413.30
		Step E	51.7047	4136.38	8962.15	107545.78
		Step F	53.2558	4260.46	9231.01	110772.06
		Step G	54.8536	4388.29	9507.96	114095.49
		Step H	56.4992	4519.94	9793.19	117518.34
		Step I	58.1942	4655.54	10086.99	121043.94
		Step J	59.9400	4795.20	10389.60	124675.20

City of Roseville

Salary Schedule: Management-B

Appendix:E
Effective Date:08/24/2024

MGMT Management

Grade Code	Grade Name	Step Name	Hourly	Bi-Weekly	Monthly	Annual
5505B	Power Engineering Manager-B	Step A	86.3391	6907.13	14965.44	179585.33
		Step B	91.3368	7306.94	15831.71	189980.54
		Step C	94.0768	7526.14	16306.65	195679.74
		Step D	96.8991	7751.93	16795.84	201550.13
		Step E	99.8060	7984.48	17299.71	207596.48
		Step F	102.8003	8224.02	17818.72	213824.62
		Step G	105.8843	8470.74	18353.28	220239.34
		Step H	109.0609	8724.87	18903.89	226846.67
		Step I	112.3327	8986.62	19471.00	233652.02
		Step J	115.7026	9256.21	20055.12	240661.41

City of Roseville

Salary Schedule: Management-B

Appendix:E
Effective Date:08/24/2024

MGMT Management

Grade Code	Grade Name	Step Name	Hourly	Bi-Weekly	Monthly	Annual
5600B	Power Generation Superintendent-B	Step A	86.8145	6945.16	15047.85	180574.16
		Step B	91.8396	7347.17	15918.86	191026.37
		Step C	94.5948	7567.58	16396.43	196757.18
		Step D	97.4327	7794.62	16888.33	202660.02
		Step E	100.3557	8028.46	17394.99	208739.86
		Step F	103.3663	8269.30	17916.83	215001.90
		Step G	106.4674	8517.39	18454.35	221452.19
		Step H	109.6614	8772.91	19007.98	228095.71
		Step I	112.9512	9036.10	19578.21	234938.50
		Step J	116.3397	9307.18	20165.55	241986.58

City of Roseville

Salary Schedule: Management-B

Appendix:E
Effective Date:08/24/2024

MGMT Management

Grade Code	Grade Name	Step Name	Hourly	Bi-Weekly	Monthly	Annual
5530B	Power Plant Operations and Maintenance Supervisor-B	Step A	78.9232	6313.86	13680.02	164160.26
		Step B	83.4917	6679.34	14471.89	173662.74
		Step C	85.9965	6879.72	14906.06	178872.72
		Step D	88.5763	7086.10	15353.23	184238.70
		Step E	91.2336	7298.69	15813.82	189765.89
		Step F	93.9706	7517.65	16288.24	195458.85
		Step G	96.7898	7743.18	16776.90	201322.78
		Step H	99.6934	7975.47	17280.19	207362.27
		Step I	102.6843	8214.74	17798.61	213583.34
		Step J	105.7648	8461.18	18332.57	219990.78

City of Roseville

Salary Schedule: Management-B

Appendix:E
Effective Date:08/24/2024

MGMT Management

Grade Code	Grade Name	Step Name	Hourly	Bi-Weekly	Monthly	Annual
5535B	Power Supply and Portfolio Administrator-B	Step A	86.3352	6906.82	14964.77	179577.22
		Step B	91.3327	7306.62	15831.00	189972.02
		Step C	94.0726	7525.81	16305.92	195671.01
		Step D	96.8947	7751.58	16795.08	201540.98
		Step E	99.8016	7984.13	17298.94	207587.33
		Step F	102.7957	8223.66	17817.92	213815.06
		Step G	105.8795	8470.36	18352.45	220229.36
		Step H	109.0559	8724.47	18903.02	226836.27
		Step I	112.3276	8986.21	19470.12	233641.41
		Step J	115.6974	9255.79	20054.22	240650.59

City of Roseville

Salary Schedule: Management-B

Appendix:E
Effective Date:08/24/2024

MGMT Management

Grade Code	Grade Name	Step Name	Hourly	Bi-Weekly	Monthly	Annual
5519B	Preventative Maintenance Supervisor-B	Step A	52.9503	4236.02	9178.05	110136.62
		Step B	56.0159	4481.27	9709.42	116513.07
		Step C	57.6964	4615.71	10000.71	120008.51
		Step D	59.4272	4754.18	10300.71	123608.58
		Step E	61.2100	4896.80	10609.73	127316.80
		Step F	63.0463	5043.70	10928.03	131136.30
		Step G	64.9378	5195.02	11255.89	135070.62
		Step H	66.8859	5350.87	11593.56	139122.67
		Step I	68.8924	5511.39	11941.35	143296.19
		Step J	70.9592	5676.74	12299.59	147595.14

City of Roseville

Salary Schedule: Management-B

Appendix:E
Effective Date:08/24/2024

MGMT Management

Grade Code	Grade Name	Step Name	Hourly	Bi-Weekly	Monthly	Annual
5514B	Principal Engineer-B	Step A	59.4196	4753.57	10299.40	123592.77
		Step B	62.8589	5028.71	10895.54	130746.51
		Step C	64.7446	5179.57	11222.40	134668.77
		Step D	66.6871	5334.97	11559.10	138709.17
		Step E	68.6876	5495.01	11905.85	142870.21
		Step F	70.7483	5659.86	12263.04	147156.46
		Step G	72.8707	5829.66	12630.92	151571.06
		Step H	75.0568	6004.54	13009.85	156118.14
		Step I	77.3085	6184.68	13400.14	160801.68
		Step J	79.6278	6370.22	13802.15	165625.82

City of Roseville

Salary Schedule: Management-B

Appendix:E
Effective Date:08/24/2024

MGMT Management

Grade Code	Grade Name	Step Name	Hourly	Bi-Weekly	Monthly	Annual
5513B	Principal Planner-B	Step A	55.3792	4430.34	9599.06	115188.74
		Step B	58.5849	4686.79	10154.72	121856.59
		Step C	60.3423	4827.38	10459.33	125511.98
		Step D	62.1527	4972.22	10773.13	129277.62
		Step E	64.0173	5121.38	11096.33	133155.98
		Step F	65.9378	5275.02	11429.22	137150.62
		Step G	67.9158	5433.26	11772.07	141264.86
		Step H	69.9534	5596.27	12125.26	145503.07
		Step I	72.0520	5764.16	12489.01	149868.16
		Step J	74.2135	5937.08	12863.67	154364.08

City of Roseville

Salary Schedule: Management-B

Appendix:E
Effective Date:08/24/2024

MGMT Management

Grade Code	Grade Name	Step Name	Hourly	Bi-Weekly	Monthly	Annual
1114B	Principal Power Engineer-B	Step A	82.5816	6606.53	14314.14	171769.73
		Step B	87.3618	6988.94	15142.71	181712.54
		Step C	89.9826	7198.61	15596.98	187163.81
		Step D	92.6821	7414.57	16064.90	192778.77
		Step E	95.4626	7637.01	16546.85	198562.21
		Step F	98.3265	7866.12	17043.26	204519.12
		Step G	101.2763	8102.10	17554.56	210654.70
		Step H	104.3145	8345.16	18081.18	216974.16
		Step I	107.4440	8595.52	18623.63	223483.52
		Step J	110.6673	8853.38	19182.33	230187.98

City of Roseville

Salary Schedule: Management-B

Appendix:E
Effective Date:08/24/2024

MGMT Management

Grade Code	Grade Name	Step Name	Hourly	Bi-Weekly	Monthly	Annual
1115B	Principal Power Plant Engineer-B	Step A	82.5816	6606.53	14314.14	171769.73
		Step B	87.3618	6988.94	15142.71	181712.54
		Step C	89.9826	7198.61	15596.98	187163.81
		Step D	92.6821	7414.57	16064.90	192778.77
		Step E	95.4626	7637.01	16546.85	198562.21
		Step F	98.3265	7866.12	17043.26	204519.12
		Step G	101.2763	8102.10	17554.56	210654.70
		Step H	104.3145	8345.16	18081.18	216974.16
		Step I	107.4440	8595.52	18623.63	223483.52
		Step J	110.6673	8853.38	19182.33	230187.98

City of Roseville

Salary Schedule: Management-B

Appendix:E
Effective Date:08/24/2024

MGMT Management

Grade Code	Grade Name	Step Name	Hourly	Bi-Weekly	Monthly	Annual
1004B	Process Engineer-B	Step A	59.4196	4753.57	10299.40	123592.77
		Step B	62.8589	5028.71	10895.54	130746.51
		Step C	64.7446	5179.57	11222.40	134668.77
		Step D	66.6871	5334.97	11559.10	138709.17
		Step E	68.6876	5495.01	11905.85	142870.21
		Step F	70.7483	5659.86	12263.04	147156.46
		Step G	72.8707	5829.66	12630.92	151571.06
		Step H	75.0568	6004.54	13009.85	156118.14
		Step I	77.3085	6184.68	13400.14	160801.68
		Step J	79.6278	6370.22	13802.15	165625.82

City of Roseville

Salary Schedule: Management-B

Appendix:E
Effective Date:08/24/2024

MGMT Management

Grade Code	Grade Name	Step Name	Hourly	Bi-Weekly	Monthly	Annual
1069B	Project Supervisor-B	Step A	51.6694	4133.55	8956.03	107472.35
		Step B	54.6603	4372.82	9474.45	113693.42
		Step C	56.3001	4504.01	9758.68	117104.21
		Step D	57.9892	4639.14	10051.46	120617.54
		Step E	59.7288	4778.30	10352.99	124235.90
		Step F	61.5207	4921.66	10663.59	127963.06
		Step G	63.3663	5069.30	10983.49	131801.90
		Step H	65.2672	5221.38	11312.98	135755.78
		Step I	67.2252	5378.02	11652.37	139828.42
		Step J	69.2420	5539.36	12001.95	144023.36

City of Roseville

Salary Schedule: Management-B

Appendix:E
Effective Date:08/24/2024

MGMT Management

Grade Code	Grade Name	Step Name	Hourly	Bi-Weekly	Monthly	Annual
1108B	Public Affairs and Communications Manager-B	Step A	56.9260	4554.08	9867.17	118406.08
		Step B	60.2211	4817.69	10438.32	125259.89
		Step C	62.0278	4962.22	10751.49	129017.82
		Step D	63.8886	5111.09	11074.02	132888.29
		Step E	65.8053	5264.42	11406.25	136875.02
		Step F	67.7794	5422.35	11748.43	140981.15
		Step G	69.8128	5585.02	12100.89	145210.62
		Step H	71.9072	5752.58	12463.91	149566.98
		Step I	74.0644	5925.15	12837.83	154053.95
		Step J	76.2864	6102.91	13222.98	158675.71

City of Roseville

Salary Schedule: Management-B

Appendix:E
Effective Date:08/24/2024

MGMT Management

Grade Code	Grade Name	Step Name	Hourly	Bi-Weekly	Monthly	Annual
5635B	Public Works Director-B	Step A	85.5045	6840.36	14820.78	177849.36
		Step B	90.4539	7236.31	15678.68	188144.11
		Step C	93.1675	7453.40	16149.03	193788.40
		Step D	95.9625	7677.00	16633.50	199602.00
		Step E	98.8414	7907.31	17132.51	205590.11
		Step F	101.8067	8144.54	17646.49	211757.94
		Step G	104.8608	8388.86	18175.87	218110.46
		Step H	108.0067	8640.54	18721.16	224653.94
		Step I	111.2469	8899.75	19282.80	231393.55
		Step J	114.5843	9166.74	19861.28	238335.34

City of Roseville

Salary Schedule: Management-B

Appendix:E
Effective Date:08/24/2024

MGMT Management

Grade Code	Grade Name	Step Name	Hourly	Bi-Weekly	Monthly	Annual
1087B	Public Works Manager-B	Step A	56.8363	4546.90	9851.63	118219.50
		Step B	60.1263	4810.10	10421.89	125062.70
		Step C	61.9302	4954.42	10734.57	128814.82
		Step D	63.7880	5103.04	11056.59	132679.04
		Step E	65.7017	5256.14	11388.29	136659.54
		Step F	67.6727	5413.82	11729.93	140759.22
		Step G	69.7029	5576.23	12081.84	144982.03
		Step H	71.7941	5743.53	12444.31	149331.73
		Step I	73.9477	5915.82	12817.60	153811.22
		Step J	76.1663	6093.30	13202.16	158425.90

City of Roseville

Salary Schedule: Management-B

Appendix:E
Effective Date:08/24/2024

MGMT Management

Grade Code	Grade Name	Step Name	Hourly	Bi-Weekly	Monthly	Annual
1129B	Purchasing Supervisor-B	Step A	41.8409	3347.27	7252.42	87029.07
		Step B	44.2628	3541.02	7672.22	92066.62
		Step C	45.5907	3647.26	7902.39	94828.66
		Step D	46.9584	3756.67	8139.46	97673.47
		Step E	48.3672	3869.38	8383.65	100603.78
		Step F	49.8182	3985.46	8635.15	103621.86
		Step G	51.3127	4105.02	8894.20	106730.42
		Step H	52.8521	4228.17	9161.03	109932.37
		Step I	54.4376	4355.01	9435.85	113230.21
		Step J	56.0708	4485.66	9718.94	116627.26

City of Roseville

Salary Schedule: Management-B

Appendix:E
Effective Date:08/24/2024

MGMT Management

Grade Code	Grade Name	Step Name	Hourly	Bi-Weekly	Monthly	Annual
5652B	Purchasing and Warehouse Manager-B	Step A	54.1615	4332.92	9387.99	112655.92
		Step B	57.2966	4583.73	9931.41	119176.93
		Step C	59.0155	4721.24	10229.35	122752.24
		Step D	60.7859	4862.87	10536.22	126434.67
		Step E	62.6095	5008.76	10852.31	130227.76
		Step F	64.4878	5159.02	11177.89	134134.62
		Step G	66.4224	5313.79	11513.22	138158.59
		Step H	68.4151	5473.21	11858.62	142303.41
		Step I	70.4676	5637.41	12214.38	146572.61
		Step J	72.5816	5806.53	12580.81	150969.73

City of Roseville

Salary Schedule: Management-B

Appendix:E
Effective Date:08/24/2024

MGMT Management

Grade Code	Grade Name	Step Name	Hourly	Bi-Weekly	Monthly	Annual
1143B	Recreation Superintendent-B	Step A	45.9191	3673.53	7959.31	95511.73
		Step B	48.5570	3884.56	8416.55	100998.56
		Step C	50.0343	4002.74	8672.61	104071.34
		Step D	51.5352	4122.82	8932.77	107193.22
		Step E	53.0813	4246.50	9200.76	110409.10
		Step F	54.6738	4373.90	9476.79	113721.50
		Step G	56.3140	4505.12	9761.09	117133.12
		Step H	58.0034	4640.27	10053.92	120647.07
		Step I	59.7436	4779.49	10355.56	124266.69
		Step J	61.5358	4922.86	10666.21	127994.46

City of Roseville

Salary Schedule: Management-B

Appendix:E
Effective Date:08/24/2024

MGMT Management

Grade Code	Grade Name	Step Name	Hourly	Bi-Weekly	Monthly	Annual
1144B	Recreation Supervisor-B	Step A	35.1205	2809.64	6087.55	73050.64
		Step B	37.1538	2972.30	6439.99	77279.90
		Step C	38.2684	3061.47	6633.19	79598.27
		Step D	39.4164	3153.31	6832.18	81986.11
		Step E	40.5989	3247.91	7037.14	84445.71
		Step F	41.8169	3345.35	7248.26	86979.15
		Step G	43.0714	3445.71	7465.71	89588.51
		Step H	44.3635	3549.08	7689.67	92276.08
		Step I	45.6944	3655.55	7920.36	95044.35
		Step J	47.0653	3765.22	8157.99	97895.82

City of Roseville

Salary Schedule: Management-B

Appendix:E
Effective Date:08/24/2024

MGMT Management

Grade Code	Grade Name	Step Name	Hourly	Bi-Weekly	Monthly	Annual
6231B	Refuse Superintendent-B	Step A	49.7828	3982.62	8629.02	103548.22
		Step B	52.6644	4213.15	9128.50	109541.95
		Step C	54.2443	4339.54	9402.35	112828.14
		Step D	55.8716	4469.73	9684.41	116212.93
		Step E	57.5479	4603.83	9974.97	119699.63
		Step F	59.2743	4741.94	10274.21	123290.54
		Step G	61.0525	4884.20	10582.43	126989.20
		Step H	62.8840	5030.72	10899.89	130798.72
		Step I	64.7705	5181.64	11226.89	134722.64
		Step J	66.7137	5337.10	11563.71	138764.50

City of Roseville

Salary Schedule: Management-B

Appendix:E
Effective Date:08/24/2024

MGMT Management

Grade Code	Grade Name	Step Name	Hourly	Bi-Weekly	Monthly	Annual
6235B	Refuse Supervisor-B	Step A	41.4857	3318.86	7190.85	86290.26
		Step B	43.8863	3510.90	7606.96	91283.50
		Step C	45.2029	3616.23	7835.17	94022.03
		Step D	46.5590	3724.72	8070.23	96842.72
		Step E	47.9557	3836.46	8312.32	99747.86
		Step F	49.3944	3951.55	8561.70	102740.35
		Step G	50.8763	4070.10	8818.56	105822.70
		Step H	52.4026	4192.21	9083.12	108997.41
		Step I	53.9747	4317.98	9355.61	112267.38
		Step J	55.5939	4447.51	9636.28	115635.31

City of Roseville

Salary Schedule: Management-B

Appendix:E
Effective Date:08/24/2024

MGMT Management

Grade Code	Grade Name	Step Name	Hourly	Bi-Weekly	Monthly	Annual
6244B	Refuse and Stormwater Manager-B	Step A	66.8492	5347.94	11587.19	139046.34
		Step B	70.7182	5657.46	12257.82	147093.86
		Step C	72.8398	5827.18	12625.57	151506.78
		Step D	75.0251	6002.01	13004.35	156052.21
		Step E	77.2759	6182.07	13394.49	160733.87
		Step F	79.5942	6367.54	13796.33	165555.94
		Step G	81.9819	6558.55	14210.20	170522.35
		Step H	84.4414	6755.31	14636.51	175638.11
		Step I	86.9746	6957.97	15075.60	180907.17
		Step J	89.5838	7166.70	15527.86	186334.30

City of Roseville

Salary Schedule: Management-B

Appendix:E
Effective Date:08/24/2024

MGMT Management

Grade Code	Grade Name	Step Name	Hourly	Bi-Weekly	Monthly	Annual
6450B	Risk Manager-B	Step A	59.5910	4767.28	10329.11	123949.28
		Step B	63.0404	5043.23	10927.00	131124.03
		Step C	64.9316	5194.53	11254.81	135057.73
		Step D	66.8796	5350.37	11592.46	139109.57
		Step E	68.8860	5510.88	11940.24	143282.88
		Step F	70.9526	5676.21	12298.45	147581.41
		Step G	73.0811	5846.49	12667.39	152008.69
		Step H	75.2735	6021.88	13047.41	156568.88
		Step I	77.5317	6202.54	13438.83	161265.94
		Step J	79.8577	6388.62	13842.00	166104.02

City of Roseville

Salary Schedule: Management-B

Appendix:E
Effective Date:08/24/2024

MGMT Management

Grade Code	Grade Name	Step Name	Hourly	Bi-Weekly	Monthly	Annual
6500B	Safety Coordinator-B	Step A	41.7429	3339.43	7235.44	86825.23
		Step B	44.1591	3532.73	7654.24	91850.93
		Step C	45.4838	3638.70	7883.86	94606.30
		Step D	46.8483	3747.86	8120.37	97444.46
		Step E	48.2538	3860.30	8363.99	100367.90
		Step F	49.7014	3976.11	8614.91	103378.91
		Step G	51.1924	4095.39	8873.35	106480.19
		Step H	52.7282	4218.26	9139.55	109674.66
		Step I	54.3101	4344.81	9413.75	112965.01
		Step J	55.9394	4475.15	9696.16	116353.95

City of Roseville

Salary Schedule: Management-B

Appendix:E
Effective Date:08/24/2024

MGMT Management

Grade Code	Grade Name	Step Name	Hourly	Bi-Weekly	Monthly	Annual
7130B	Senior Business Systems Analyst-B	Step A	45.5054	3640.43	7887.60	94651.23
		Step B	48.1394	3851.15	8344.16	100129.95
		Step C	49.5836	3966.69	8594.49	103133.89
		Step D	51.0711	4085.69	8852.32	106227.89
		Step E	52.6032	4208.26	9117.89	109414.66
		Step F	54.1815	4334.52	9391.46	112697.52
		Step G	55.8069	4464.55	9673.20	116078.35
		Step H	57.4811	4598.49	9963.39	119560.69
		Step I	59.2055	4736.44	10262.29	123147.44
		Step J	60.9817	4878.54	10570.16	126841.94

City of Roseville

Salary Schedule: Management-B

Appendix:E
Effective Date:08/24/2024

MGMT Management

Grade Code	Grade Name	Step Name	Hourly	Bi-Weekly	Monthly	Annual
7145B	Senior Database Analyst-B	Step A	45.5054	3640.43	7887.60	94651.23
		Step B	48.1394	3851.15	8344.16	100129.95
		Step C	49.5836	3966.69	8594.49	103133.89
		Step D	51.0711	4085.69	8852.32	106227.89
		Step E	52.6032	4208.26	9117.89	109414.66
		Step F	54.1815	4334.52	9391.46	112697.52
		Step G	55.8069	4464.55	9673.20	116078.35
		Step H	57.4811	4598.49	9963.39	119560.69
		Step I	59.2055	4736.44	10262.29	123147.44
		Step J	60.9817	4878.54	10570.16	126841.94

City of Roseville

Salary Schedule: Management-B

Appendix:E
Effective Date:08/24/2024

MGMT Management

Grade Code	Grade Name	Step Name	Hourly	Bi-Weekly	Monthly	Annual
7123B	Senior Deputy City Attorney-B	Step A	81.7948	6543.58	14177.77	170133.18
		Step B	86.5295	6922.36	14998.45	179981.36
		Step C	89.1253	7130.02	15448.39	185380.62
		Step D	91.7991	7343.93	15911.84	190942.13
		Step E	94.5530	7564.24	16389.19	196670.24
		Step F	97.3897	7791.18	16880.88	202570.58
		Step G	100.3114	8024.91	17387.31	208647.71
		Step H	103.3207	8265.66	17908.92	214907.06
		Step I	106.4203	8513.62	18446.19	221354.22
		Step J	109.6129	8769.03	18999.57	227994.83

City of Roseville

Salary Schedule: Management-B

Appendix:E
Effective Date:08/24/2024

MGMT Management

Grade Code	Grade Name	Step Name	Hourly	Bi-Weekly	Monthly	Annual
1097B	Senior Development Services Business Analyst-B	Step A	45.5047	3640.38	7887.48	94649.78
		Step B	48.1387	3851.10	8344.04	100128.50
		Step C	49.5829	3966.63	8594.37	103132.43
		Step D	51.0704	4085.63	8852.20	106226.43
		Step E	52.6024	4208.19	9117.75	109412.99
		Step F	54.1806	4334.45	9391.30	112695.65
		Step G	55.8061	4464.49	9673.06	116076.69
		Step H	57.4801	4598.41	9963.22	119558.61
		Step I	59.2045	4736.36	10262.11	123145.36
		Step J	60.9807	4878.46	10569.99	126839.86

City of Roseville

Salary Schedule: Management-B

Appendix:E
Effective Date:08/24/2024

MGMT Management

Grade Code	Grade Name	Step Name	Hourly	Bi-Weekly	Monthly	Annual
7128B	Senior Electric Business Analyst-B	Step A	59.4219	4753.75	10299.80	123597.55
		Step B	62.8616	5028.93	10896.01	130752.13
		Step C	64.7474	5179.79	11222.88	134674.59
		Step D	66.6899	5335.19	11559.58	138714.99
		Step E	68.6905	5495.24	11906.35	142876.24
		Step F	70.7512	5660.10	12263.54	147162.50
		Step G	72.8738	5829.90	12631.46	151577.50
		Step H	75.0599	6004.79	13010.38	156124.59
		Step I	77.3117	6184.94	13400.69	160808.34
		Step J	79.6311	6370.49	13802.72	165632.69

City of Roseville

Salary Schedule: Management-B

Appendix:E
Effective Date:08/24/2024

MGMT Management

Grade Code	Grade Name	Step Name	Hourly	Bi-Weekly	Monthly	Annual
1023B	Senior Electric Technology Systems Analyst-B	Step A	61.1103	4888.82	10592.45	127109.42
		Step B	64.6475	5171.80	11205.57	134466.80
		Step C	66.5869	5326.95	11541.73	138500.75
		Step D	68.5846	5486.77	11888.00	142655.97
		Step E	70.6421	5651.37	12244.63	146935.57
		Step F	72.7613	5820.90	12611.96	151343.50
		Step G	74.9442	5995.54	12990.33	155883.94
		Step H	77.1925	6175.40	13380.03	160560.40
		Step I	79.5083	6360.66	13781.44	165377.26
		Step J	81.8936	6551.49	14194.89	170338.69

City of Roseville

Salary Schedule: Management-B

Appendix:E
Effective Date:08/24/2024

MGMT Management

Grade Code	Grade Name	Step Name	Hourly	Bi-Weekly	Monthly	Annual
7163B	Senior Energy Services Account Representative-B	Step A	59.2013	4736.10	10261.56	123138.70
		Step B	62.6282	5010.26	10855.55	130266.66
		Step C	64.5071	5160.57	11181.23	134174.77
		Step D	66.4422	5315.38	11516.65	138199.78
		Step E	68.4356	5474.85	11862.17	142346.05
		Step F	70.4886	5639.09	12218.02	146616.29
		Step G	72.6032	5808.26	12584.55	151014.66
		Step H	74.7813	5982.50	12962.09	155545.10
		Step I	77.0248	6161.98	13350.97	160211.58
		Step J	79.3355	6346.84	13751.49	165017.84

City of Roseville

Salary Schedule: Management-B

Appendix:E
Effective Date:08/24/2024

MGMT Management

Grade Code	Grade Name	Step Name	Hourly	Bi-Weekly	Monthly	Annual
7142B	Senior Engineer-B	Step A	52.8182	4225.46	9155.15	109861.86
		Step B	55.8757	4470.06	9685.12	116221.46
		Step C	57.5520	4604.16	9975.68	119708.16
		Step D	59.2785	4742.28	10274.94	123299.28
		Step E	61.0568	4884.54	10583.18	126998.14
		Step F	62.8885	5031.08	10900.67	130808.08
		Step G	64.7752	5182.02	11227.70	134732.42
		Step H	66.7184	5337.47	11564.52	138774.27
		Step I	68.7200	5497.60	11911.47	142937.60
		Step J	70.7816	5662.53	12268.81	147225.73

City of Roseville

Salary Schedule: Management-B

Appendix:E
Effective Date:08/24/2024

MGMT Management

Grade Code	Grade Name	Step Name	Hourly	Bi-Weekly	Monthly	Annual
1065B	Senior Environmental Utilities Business Analyst-B	Step A	48.2147	3857.18	8357.21	100286.58
		Step B	51.0055	4080.44	8840.95	106091.44
		Step C	52.5357	4202.86	9106.19	109274.26
		Step D	54.1117	4328.94	9379.36	112552.34
		Step E	55.7351	4458.81	9660.75	115929.01
		Step F	57.4071	4592.57	9950.56	119406.77
		Step G	59.1294	4730.35	10249.10	122989.15
		Step H	60.9032	4872.26	10556.55	126678.66
		Step I	62.7303	5018.42	10873.25	130479.02
		Step J	64.6122	5168.98	11199.45	134393.38

City of Roseville

Salary Schedule: Management-B

Appendix:E
Effective Date:08/24/2024

MGMT Management

Grade Code	Grade Name	Step Name	Hourly	Bi-Weekly	Monthly	Annual
7161B	Senior GIS Analyst-B	Step A	45.3077	3624.62	7853.33	94240.02
		Step B	47.9302	3834.42	8307.90	99694.82
		Step C	49.3681	3949.45	8557.14	102685.65
		Step D	50.8492	4067.94	8813.86	105766.34
		Step E	52.3747	4189.98	9078.28	108939.38
		Step F	53.9459	4315.67	9350.62	112207.47
		Step G	55.5643	4445.14	9631.15	115573.74
		Step H	57.2312	4578.50	9920.07	119040.90
		Step I	58.9482	4715.86	10217.69	122612.26
		Step J	60.7167	4857.34	10524.23	126290.74

City of Roseville

Salary Schedule: Management-B

Appendix:E
Effective Date:08/24/2024

MGMT Management

Grade Code	Grade Name	Step Name	Hourly	Bi-Weekly	Monthly	Annual
7150B	Senior Human Resources Analyst-B	Step A	47.1066	3768.53	8165.14	97981.73
		Step B	49.8330	3986.64	8637.72	103652.64
		Step C	51.3280	4106.24	8896.85	106762.24
		Step D	52.8678	4229.42	9163.75	109965.02
		Step E	54.4539	4356.31	9438.68	113264.11
		Step F	56.0876	4487.01	9721.85	116662.21
		Step G	57.7702	4621.62	10013.50	120162.02
		Step H	59.5031	4760.25	10313.87	123766.45
		Step I	61.2882	4903.06	10623.29	127479.46
		Step J	63.1270	5050.16	10942.01	131304.16

City of Roseville

Salary Schedule: Management-B

Appendix:E
Effective Date:08/24/2024

MGMT Management

Grade Code	Grade Name	Step Name	Hourly	Bi-Weekly	Monthly	Annual
7194B	Senior Information Technology Analyst-B	Step A	45.5054	3640.43	7887.60	94651.23
		Step B	48.1394	3851.15	8344.16	100129.95
		Step C	49.5836	3966.69	8594.49	103133.89
		Step D	51.0711	4085.69	8852.32	106227.89
		Step E	52.6032	4208.26	9117.89	109414.66
		Step F	54.1815	4334.52	9391.46	112697.52
		Step G	55.8069	4464.55	9673.20	116078.35
		Step H	57.4811	4598.49	9963.39	119560.69
		Step I	59.2055	4736.44	10262.29	123147.44
		Step J	60.9817	4878.54	10570.16	126841.94

City of Roseville

Salary Schedule: Management-B

Appendix:E
Effective Date:08/24/2024

MGMT Management

Grade Code	Grade Name	Step Name	Hourly	Bi-Weekly	Monthly	Annual
1119B	Senior Park Development Project Manager-B	Step A	45.9170	3673.36	7958.95	95507.36
		Step B	48.5750	3886.00	8419.67	101036.00
		Step C	50.0322	4002.58	8672.25	104066.98
		Step D	51.5332	4122.66	8932.42	107189.06
		Step E	53.0792	4246.34	9200.39	110404.74
		Step F	54.6715	4373.72	9476.39	113716.72
		Step G	56.3117	4504.94	9760.69	117128.34
		Step H	58.0010	4640.08	10053.51	120642.08
		Step I	59.7411	4779.29	10355.12	124261.49
		Step J	61.5333	4922.66	10665.77	127989.26

City of Roseville

Salary Schedule: Management-B

Appendix:E
Effective Date:08/24/2024

MGMT Management

Grade Code	Grade Name	Step Name	Hourly	Bi-Weekly	Monthly	Annual
7180B	Senior Planner-B	Step A	48.1569	3852.55	8347.20	100166.35
		Step B	50.9445	4075.56	8830.38	105964.56
		Step C	52.4728	4197.82	9095.29	109143.42
		Step D	54.0469	4323.75	9368.13	112417.55
		Step E	55.6683	4453.46	9649.17	115790.06
		Step F	57.3384	4587.07	9938.66	119263.87
		Step G	59.0585	4724.68	10236.81	122841.68
		Step H	60.8304	4866.43	10543.94	126527.23
		Step I	62.6552	5012.42	10860.23	130322.82
		Step J	64.5349	5162.79	11186.05	134232.59

City of Roseville

Salary Schedule: Management-B

Appendix:E
Effective Date:08/24/2024

MGMT Management

Grade Code	Grade Name	Step Name	Hourly	Bi-Weekly	Monthly	Annual
7151B	Senior Power Engineer-B	Step A	75.0743	6005.94	13012.88	156154.54
		Step B	79.4199	6353.59	13766.12	165193.39
		Step C	81.8024	6544.19	14179.08	170148.99
		Step D	84.2566	6740.53	14604.48	175253.73
		Step E	86.7842	6942.74	15042.59	180511.14
		Step F	89.3877	7151.02	15493.87	185926.42
		Step G	92.0694	7365.55	15958.70	191504.35
		Step H	94.8314	7586.51	16437.44	197249.31
		Step I	97.6764	7814.11	16930.58	203166.91
		Step J	100.6066	8048.53	17438.48	209261.73

City of Roseville

Salary Schedule: Management-B

Appendix:E
Effective Date:08/24/2024

MGMT Management

Grade Code	Grade Name	Step Name	Hourly	Bi-Weekly	Monthly	Annual
5555B	Senior Power Plant Engineer-B	Step A	75.0743	6005.94	13012.88	156154.54
		Step B	79.4199	6353.59	13766.12	165193.39
		Step C	81.8024	6544.19	14179.08	170148.99
		Step D	84.2566	6740.53	14604.48	175253.73
		Step E	86.7842	6942.74	15042.59	180511.14
		Step F	89.3877	7151.02	15493.87	185926.42
		Step G	92.0694	7365.55	15958.70	191504.35
		Step H	94.8314	7586.51	16437.44	197249.31
		Step I	97.6764	7814.11	16930.58	203166.91
		Step J	100.6066	8048.53	17438.48	209261.73

City of Roseville

Salary Schedule: Management-B

Appendix:E
Effective Date:08/24/2024

MGMT Management

Grade Code	Grade Name	Step Name	Hourly	Bi-Weekly	Monthly	Annual
1029B	Senior Utility Billing Analyst-B	Step A	46.0265	3682.12	7977.93	95735.12
		Step B	48.6908	3895.26	8439.74	101276.86
		Step C	50.1515	4012.12	8692.93	104315.12
		Step D	51.6560	4132.48	8953.71	107444.48
		Step E	53.2058	4256.46	9222.34	110668.06
		Step F	54.8018	4384.14	9498.98	113987.74
		Step G	56.4460	4515.68	9783.97	117407.68
		Step H	58.1393	4651.14	10077.48	120929.74
		Step I	59.8835	4790.68	10379.81	124557.68
		Step J	61.6800	4934.40	10691.20	128294.40

City of Roseville

Salary Schedule: Management-B

Appendix:E
Effective Date:08/24/2024

MGMT Management

Grade Code	Grade Name	Step Name	Hourly	Bi-Weekly	Monthly	Annual
1073B	Street Maintenance Manager-B	Step A	59.4600	4756.80	10306.40	123676.80
		Step B	62.9018	5032.14	10902.98	130835.74
		Step C	64.7888	5183.10	11230.06	134760.70
		Step D	66.7324	5338.59	11566.95	138803.39
		Step E	68.7345	5498.76	11913.98	142967.76
		Step F	70.7966	5663.73	12271.41	147256.93
		Step G	72.9204	5833.63	12639.54	151674.43
		Step H	75.1079	6008.63	13018.70	156224.43
		Step I	77.3613	6188.90	13409.29	160911.50
		Step J	79.6821	6374.57	13811.56	165738.77

City of Roseville

Salary Schedule: Management-B

Appendix:E
Effective Date:08/24/2024

MGMT Management

Grade Code	Grade Name	Step Name	Hourly	Bi-Weekly	Monthly	Annual
7522B	Street Maintenance Supervisor-B	Step A	38.1973	3055.78	6620.87	79450.38
		Step B	40.4083	3232.66	7004.11	84049.26
		Step C	41.6205	3329.64	7214.22	86570.64
		Step D	42.8692	3429.54	7430.66	89167.94
		Step E	44.1552	3532.42	7653.57	91842.82
		Step F	45.4799	3638.39	7883.18	94598.19
		Step G	46.8443	3747.54	8119.68	97436.14
		Step H	48.2497	3859.98	8363.28	100359.38
		Step I	49.6971	3975.77	8614.16	103369.97
		Step J	51.1880	4095.04	8872.59	106471.04

City of Roseville

Salary Schedule: Management-B

Appendix:E
Effective Date:08/24/2024

MGMT Management

Grade Code	Grade Name	Step Name	Hourly	Bi-Weekly	Monthly	Annual
1110B	Transit Operations Supervisor-B	Step A	45.9171	3673.37	7958.96	95507.57
		Step B	48.5750	3886.00	8419.67	101036.00
		Step C	50.0322	4002.58	8672.25	104066.98
		Step D	51.5332	4122.66	8932.42	107189.06
		Step E	53.0791	4246.33	9200.38	110404.53
		Step F	54.6715	4373.72	9476.39	113716.72
		Step G	56.3117	4504.94	9760.69	117128.34
		Step H	58.0010	4640.08	10053.51	120642.08
		Step I	59.7411	4779.29	10355.12	124261.49
		Step J	61.5332	4922.66	10665.75	127989.06

City of Roseville

Salary Schedule: Management-B

Appendix:E
Effective Date:08/24/2024

MGMT Management

Grade Code	Grade Name	Step Name	Hourly	Bi-Weekly	Monthly	Annual
8762B	Urban Forester-B	Step A	41.8236	3345.89	7249.42	86993.09
		Step B	44.2442	3539.54	7668.99	92027.94
		Step C	45.5715	3645.72	7899.06	94788.72
		Step D	46.9388	3755.10	8136.06	97632.70
		Step E	48.3470	3867.76	8380.15	100561.76
		Step F	49.7972	3983.78	8631.51	103578.18
		Step G	51.2913	4103.30	8890.49	106685.90
		Step H	52.8301	4226.41	9157.22	109886.61
		Step I	54.4150	4353.20	9431.93	113183.20
		Step J	56.0473	4483.78	9714.87	116578.38

City of Roseville

Salary Schedule: Management-B

Appendix:E
Effective Date:08/24/2024

MGMT Management

Grade Code	Grade Name	Step Name	Hourly	Bi-Weekly	Monthly	Annual
1041B	Utility Billing and Field Services Supervisor-B	Step A	47.3681	3789.45	8210.47	98525.65
		Step B	50.1099	4008.79	8685.72	104228.59
		Step C	51.6131	4129.05	8946.27	107355.25
		Step D	53.1616	4252.93	9214.68	110576.13
		Step E	54.7564	4380.51	9491.11	113893.31
		Step F	56.3991	4511.93	9775.84	117310.13
		Step G	58.0911	4647.29	10069.12	120829.49
		Step H	59.8338	4786.70	10371.19	124454.30
		Step I	61.6288	4930.30	10682.33	128187.90
		Step J	63.4777	5078.22	11002.80	132033.62

City of Roseville

Salary Schedule: Management-B

Appendix:E
Effective Date:08/24/2024

MGMT Management

Grade Code	Grade Name	Step Name	Hourly	Bi-Weekly	Monthly	Annual
1042B	Utility Customer Service Supervisor-B	Step A	34.0428	2723.42	5900.75	70809.02
		Step B	36.0132	2881.06	6242.29	74907.46
		Step C	37.0936	2967.49	6429.56	77154.69
		Step D	38.2064	3056.51	6622.44	79469.31
		Step E	39.3527	3148.22	6821.13	81853.62
		Step F	40.5332	3242.66	7025.75	84309.06
		Step G	41.7493	3339.94	7236.55	86838.54
		Step H	43.0017	3440.14	7453.63	89443.54
		Step I	44.2918	3543.34	7677.25	92126.94
		Step J	45.6205	3649.64	7907.55	94890.64

City of Roseville

Salary Schedule: Management-B

Appendix:E
Effective Date:08/24/2024

MGMT Management

Grade Code	Grade Name	Step Name	Hourly	Bi-Weekly	Monthly	Annual
1102B	Utility Exploration Center Supervisor-B	Step A	39.7899	3183.19	6896.92	82762.99
		Step B	42.0925	3367.40	7296.03	87552.40
		Step C	43.3553	3468.42	7514.92	90179.02
		Step D	44.6559	3572.47	7740.36	92884.27
		Step E	45.9957	3679.66	7972.59	95671.06
		Step F	47.3755	3790.04	8211.75	98541.04
		Step G	48.7968	3903.74	8458.11	101497.34
		Step H	50.2606	4020.85	8711.84	104542.05
		Step I	51.7685	4141.48	8973.21	107678.48
		Step J	53.3220	4265.76	9242.48	110909.76

City of Roseville

Salary Schedule: Management-B

Appendix:E
Effective Date:08/24/2024

MGMT Management

Grade Code	Grade Name	Step Name	Hourly	Bi-Weekly	Monthly	Annual
1646B	Utility Government Relations Administrator-B	Step A	50.0899	4007.19	8682.25	104186.99
		Step B	52.9891	4239.13	9184.78	110217.33
		Step C	54.5788	4366.30	9460.33	113523.90
		Step D	56.2162	4497.30	9744.14	116929.70
		Step E	57.9026	4632.21	10036.45	120437.41
		Step F	59.6397	4771.18	10337.55	124050.58
		Step G	61.4289	4914.31	10647.68	127772.11
		Step H	63.2717	5061.74	10967.09	131605.14
		Step I	65.1699	5213.59	11296.12	135553.39
		Step J	67.1251	5370.01	11635.02	139620.21

City of Roseville

Salary Schedule: Management-B

Appendix:E
Effective Date:08/24/2024

MGMT Management

Grade Code	Grade Name	Step Name	Hourly	Bi-Weekly	Monthly	Annual
8980B	Wastewater Collection Superintendent-B	Step A	49.7828	3982.62	8629.02	103548.22
		Step B	52.6644	4213.15	9128.50	109541.95
		Step C	54.2443	4339.54	9402.35	112828.14
		Step D	55.8716	4469.73	9684.41	116212.93
		Step E	57.5479	4603.83	9974.97	119699.63
		Step F	59.2743	4741.94	10274.21	123290.54
		Step G	61.0525	4884.20	10582.43	126989.20
		Step H	62.8840	5030.72	10899.89	130798.72
		Step I	64.7705	5181.64	11226.89	134722.64
		Step J	66.7137	5337.10	11563.71	138764.50

City of Roseville

Salary Schedule: Management-B

Appendix:E
Effective Date:08/24/2024

MGMT Management

Grade Code	Grade Name	Step Name	Hourly	Bi-Weekly	Monthly	Annual
8978B	Wastewater Collection Supervisor-B	Step A	41.4841	3318.73	7190.58	86286.93
		Step B	43.8850	3510.80	7606.73	91280.80
		Step C	45.2016	3616.13	7834.94	94019.33
		Step D	46.5576	3724.61	8069.98	96839.81
		Step E	47.9542	3836.34	8312.06	99744.74
		Step F	49.3929	3951.43	8561.44	102737.23
		Step G	50.8747	4069.98	8818.28	105819.38
		Step H	52.4010	4192.08	9082.84	108994.08
		Step I	53.9730	4317.84	9355.32	112263.84
		Step J	55.5922	4447.38	9635.98	115631.78

City of Roseville

Salary Schedule: Management-B

Appendix:E
Effective Date:08/24/2024

MGMT Management

Grade Code	Grade Name	Step Name	Hourly	Bi-Weekly	Monthly	Annual
9040B	Wastewater Treatment Plant Chief Operator-B	Step A	54.7564	4380.51	9491.11	113893.31
		Step B	57.9257	4634.06	10040.45	120485.46
		Step C	59.6636	4773.09	10341.69	124100.29
		Step D	61.4534	4916.27	10651.92	127823.07
		Step E	63.2970	5063.76	10971.48	131657.76
		Step F	65.1959	5215.67	11300.62	135607.47
		Step G	67.1519	5372.15	11639.66	139675.95
		Step H	69.1665	5533.32	11988.86	143866.32
		Step I	71.2414	5699.31	12348.51	148182.11
		Step J	73.3786	5870.29	12718.96	152627.49

City of Roseville

Salary Schedule: Management-B

Appendix:E
Effective Date:08/24/2024

MGMT Management

Grade Code	Grade Name	Step Name	Hourly	Bi-Weekly	Monthly	Annual
9045B	Wastewater Utility Manager-B	Step A	66.8492	5347.94	11587.19	139046.34
		Step B	70.7182	5657.46	12257.82	147093.86
		Step C	72.8398	5827.18	12625.57	151506.78
		Step D	75.0251	6002.01	13004.35	156052.21
		Step E	77.2759	6182.07	13394.49	160733.87
		Step F	79.5942	6367.54	13796.33	165555.94
		Step G	81.9819	6558.55	14210.20	170522.35
		Step H	84.4414	6755.31	14636.51	175638.11
		Step I	86.9746	6957.97	15075.60	180907.17
		Step J	89.5838	7166.70	15527.86	186334.30

City of Roseville

Salary Schedule: Management-B

Appendix:E
Effective Date:08/24/2024

MGMT Management

Grade Code	Grade Name	Step Name	Hourly	Bi-Weekly	Monthly	Annual
9047B	Water Conservation Administrator-B	Step A	45.6340	3650.72	7909.89	94918.72
		Step B	48.2757	3862.06	8367.79	100413.46
		Step C	49.7239	3977.91	8618.81	103425.71
		Step D	51.2157	4097.26	8877.39	106528.66
		Step E	52.7521	4220.17	9143.70	109724.37
		Step F	54.3347	4346.78	9418.01	113016.18
		Step G	55.9647	4477.18	9700.55	116406.58
		Step H	57.6437	4611.50	9991.57	119898.90
		Step I	59.3729	4749.83	10291.30	123495.63
		Step J	61.1541	4892.33	10600.04	127200.53

City of Roseville

Salary Schedule: Management-B

Appendix:E
Effective Date:08/24/2024

MGMT Management

Grade Code	Grade Name	Step Name	Hourly	Bi-Weekly	Monthly	Annual
9085B	Water Distribution Superintendent-B	Step A	49.0486	3923.89	8501.76	102021.09
		Step B	52.6644	4213.15	9128.50	109541.95
		Step C	54.2443	4339.54	9402.35	112828.14
		Step D	55.8716	4469.73	9684.41	116212.93
		Step E	57.5479	4603.83	9974.97	119699.63
		Step F	59.2743	4741.94	10274.21	123290.54
		Step G	61.0525	4884.20	10582.43	126989.20
		Step H	62.8840	5030.72	10899.89	130798.72
		Step I	64.7705	5181.64	11226.89	134722.64
		Step J	66.7137	5337.10	11563.71	138764.50

City of Roseville

Salary Schedule: Management-B

Appendix:E
Effective Date:08/24/2024

MGMT Management

Grade Code	Grade Name	Step Name	Hourly	Bi-Weekly	Monthly	Annual
9084B	Water Distribution Supervisor-B	Step A	41.4840	3318.72	7190.56	86286.72
		Step B	43.8850	3510.80	7606.73	91280.80
		Step C	45.2016	3616.13	7834.94	94019.33
		Step D	46.5576	3724.61	8069.98	96839.81
		Step E	47.9542	3836.34	8312.06	99744.74
		Step F	49.3929	3951.43	8561.44	102737.23
		Step G	50.8747	4069.98	8818.28	105819.38
		Step H	52.4010	4192.08	9082.84	108994.08
		Step I	53.9730	4317.84	9355.32	112263.84
		Step J	55.5922	4447.38	9635.98	115631.78

City of Roseville

Salary Schedule: Management-B

Appendix:E
Effective Date:08/24/2024

MGMT Management

Grade Code	Grade Name	Step Name	Hourly	Bi-Weekly	Monthly	Annual
9101B	Water Quality Lab Supervisor-B	Step A	43.5565	3484.52	7549.79	90597.52
		Step B	46.0775	3686.20	7986.77	95841.20
		Step C	47.4599	3796.79	8226.38	98716.59
		Step D	48.8836	3910.69	8473.16	101677.89
		Step E	50.3501	4028.01	8727.35	104728.21
		Step F	51.8607	4148.86	8989.19	107870.26
		Step G	53.4165	4273.32	9258.86	111106.32
		Step H	55.0190	4401.52	9536.63	114439.52
		Step I	56.6695	4533.56	9822.71	117872.56
		Step J	58.3697	4669.58	10117.41	121408.98

City of Roseville

Salary Schedule: Management-B

Appendix:E
Effective Date:08/24/2024

MGMT Management

Grade Code	Grade Name	Step Name	Hourly	Bi-Weekly	Monthly	Annual
9175B	Water Treatment Plant Chief Operator-B	Step A	49.7784	3982.27	8628.26	103539.07
		Step B	52.6599	4212.79	9127.72	109532.59
		Step C	54.2397	4339.18	9401.55	112818.58
		Step D	55.8669	4469.35	9683.60	116203.15
		Step E	57.5428	4603.42	9974.09	119689.02
		Step F	59.2691	4741.53	10273.31	123279.73
		Step G	61.0472	4883.78	10581.51	126978.18
		Step H	62.8785	5030.28	10898.94	130787.28
		Step I	64.7649	5181.19	11225.92	134710.99
		Step J	66.7080	5336.64	11562.72	138752.64

City of Roseville

Salary Schedule: Management-B

Appendix:E
Effective Date:08/24/2024

MGMT Management

Grade Code	Grade Name	Step Name	Hourly	Bi-Weekly	Monthly	Annual
9244B	Water Utility Manager-B	Step A	66.8492	5347.94	11587.19	139046.34
		Step B	70.7182	5657.46	12257.82	147093.86
		Step C	72.8398	5827.18	12625.57	151506.78
		Step D	75.0251	6002.01	13004.35	156052.21
		Step E	77.2759	6182.07	13394.49	160733.87
		Step F	79.5942	6367.54	13796.33	165555.94
		Step G	81.9819	6558.55	14210.20	170522.35
		Step H	84.4414	6755.31	14636.51	175638.11
		Step I	86.9746	6957.97	15075.60	180907.17
		Step J	89.5838	7166.70	15527.86	186334.30

Position Allocation Control Report

Report as of Date:

8/24/2024

Position Code	Position Title	Allocated FTE
CAO220245001	Assistant City Attorney	1.00
CAO221200001	City Attorney	1.00
CAO221658001	Deputy City Attorney I/II	1.00
CAO221658002	Deputy City Attorney I/II	1.00
CAO221132001	Legal Assistant I/II	1.00
CAO221132002	Legal Assistant I/II	1.00
CAO225015001	Paralegal	1.00
CAO227123001	Senior Deputy City Attorney	1.00
CAO227123002	Senior Deputy City Attorney	1.00
CAO227123003	Senior Deputy City Attorney	1.00
Total for Department:	**CAO City Attorney**	10.00

Position Code	Position Title	Allocated FTE
CCD360250001	Assistant City Clerk	1.00
CCD361220001	City Clerk	1.00
CCD361227001	City Clerk Technician I/II	1.00
CCD361227002	City Clerk Technician I/II	1.00
CCD361227003	City Clerk Technician I/II	1.00
CCD361227004	City Clerk Technician I/II	1.00
CCD361227005	City Clerk Technician I/II	1.00
CCD361665001	Deputy City Clerk I/ll	1.00
CCD361665002	Deputy City Clerk I/ll	1.00
CCD369548001	Passport Agent	1.00
CCD369548002	Passport Agent	1.00
CCD369548004	Passport Agent	0.50
CCD369548006	Passport Agent	0.50
Total for Department:	**CCD City Clerk Department**	12.00

Position Code	Position Title	Allocated FTE
CMO140325001	Assistant City Manager	1.00
CMO140325002	Assistant City Manager	1.00
CMO141240001	City Manager	1.00
CMO142551001	Executive Assistant	1.00
CMO142551002	Executive Assistant	1.00
CMO1414449001	Management Analyst - City Manager	1.00
CMO144457001	Management Assistant I/II	1.00
Total for Department:	**CMO City Manager**	7.00

Position Code	Position Title	Allocated FTE
DSD660071001	Administrative Assistant	1.00
DSD660084001	Administrative Technician	1.00
DSD661017001	Assistant Building Official	1.00
DSD661005001	Associate (PE)/Assistant/Junior Engineer	1.00
DSD661005002	Associate (PE)/Assistant/Junior Engineer	1.00
DSD661005003	Associate (PE)/Assistant/Junior Engineer	1.00
DSD661005004	Associate (PE)/Assistant/Junior Engineer	1.00
DSD661005005	Associate (PE)/Assistant/Junior Engineer	1.00
DSD661005006	Associate (PE)/Assistant/Junior Engineer	1.00
DSD660820001	Associate Engineer	1.00
DSD660900001	Associate/Assistant Planner	1.00
DSD660900002	Associate/Assistant Planner	1.00
DSD660900003	Associate/Assistant Planner	1.00
DSD660900004	Associate/Assistant Planner	1.00
DSD660900005	Associate/Assistant Planner	1.00
DSD661019002	Building Inspector I/II	1.00
DSD661019003	Building Inspector I/II	1.00
DSD661019004	Building Inspector I/II	1.00
DSD661019005	Building Inspector I/II	1.00
DSD661019006	Building Inspector I/II	1.00
DSD661019007	Building Inspector I/II	1.00
DSD661019008	Building Inspector I/II	1.00
DSD661043001	Building Official	1.00
DSD661047001	Building Plans Examiner I/II	1.00
DSD661047002	Building Plans Examiner I/II	1.00
DSD661047003	Building Plans Examiner I/II	1.00
DSD661047004	Building Plans Examiner I/II	1.00
DSD661047005	Building Plans Examiner I/II	1.00
DSD661141001	Building Plans Examiner Supervisor	1.00
DSD661369001	Code Enforcement Inspector I/II	1.00
DSD661369002	Code Enforcement Inspector I/II	1.00
DSD661369003	Code Enforcement Inspector I/II	1.00
DSD661369004	Code Enforcement Inspector I/II	1.00
DSD661369005	Code Enforcement Inspector I/II	1.00
DSD661368001	Code Enforcement Supervisor	1.00
DSD661027001	Construction Inspection Superintendent	1.00
DSD661248001	Construction Inspection Supervisor	1.00
DSD661434001	Construction Inspector I/II	1.00
DSD661434002	Construction Inspector I/II	1.00
DSD661434003	Construction Inspector I/II	1.00
DSD661434004	Construction Inspector I/II	1.00
DSD661434005	Construction Inspector I/II	1.00
DSD661280001	Development Services Administrator	1.00
DSD661096001	Development Services Business Analyst I/II	1.00
DSD661096002	Development Services Business Analyst I/II	1.00

DSD661676001	Development Services Director	1.00
DSD661695001	Development Services Manager	1.00
DSD661672001	Development Technician I/II	1.00
DSD661672002	Development Technician I/II	1.00
DSD661672003	Development Technician I/II	1.00
DSD661672004	Development Technician I/II	1.00
DSD661672005	Development Technician I/II	1.00
DSD661277001	Engineering Manager	1.00
DSD662540001	Environmental Coordinator	1.00
DSD663412001	GIS Analyst I/II	1.00
DSD662214001	GIS Technician I/II	1.00
DSD660050001	Management Analyst I/II	1.00
DSD664957001	Office Assistant I/II	1.00
DSD664957002	Office Assistant I/II	1.00
DSD665279001	Permit Technician I/II	1.00
DSD665279002	Permit Technician I/II	1.00
DSD665279003	Permit Technician I/II	1.00
DSD665279004	Permit Technician I/II	1.00
DSD661501001	Permits Supervisor	1.00
DSD665309001	Planning Manager	1.00
DSD665514001	Principal Engineer	1.00
DSD661017002	Senior Building Inspector	1.00
DSD667117001	Senior Building Inspector	1.00
DSD667195002	Senior Building Plans Examiner	1.00
DSD667121001	Senior Construction Inspector	1.00
DSD667121002	Senior Construction Inspector	1.00
DSD661097001	Senior Development Services Business Analyst	1.00
DSD667142002	Senior Engineer	1.00
DSD667142003	Senior Engineer	1.00
DSD661502001	Senior Permits Technician	1.00
DSD667180001	Senior Planner	1.00
DSD667180002	Senior Planner	1.00
Total for Department:	**DSD Development Services Department**	77.00

Position Code	**Position Title**	**Allocated FTE**
EDD541675001	Economic Development Analyst I/II	1.00
EDD541710001	Economic Development Director	1.00
EDD541118001	Economic Development Manager	1.00
EDD541001001	Economic Development Project Manager	1.00
EDD541001002	Economic Development Project Manager	1.00
EDD543402001	Housing Analyst I/II	1.00
EDD543402002	Housing Analyst I/II	1.00
EDD543402003	Housing Analyst I/II	1.00
EDD543402004	Housing Analyst I/II	1.00
EDD543589001	Housing Manager	1.00

EDD543590001	Housing Supervisor	1.00
EDD543592001	Housing Technician I/II	1.00
EDD543592002	Housing Technician I/II	1.00
EDD543592003	Housing Technician I/II	1.00
EDD543592004	Housing Technician I/II	1.00
EDD540050001	Management Analyst I/II	1.00
EDD544957001	Office Assistant I/II	1.00
EDD547148001	Senior Housing Technician	1.00

Total for Department:	**EDD Economic Development Department**	18.00

Position Code	Position Title	Allocated FTE
ELE700071001	Administrative Assistant	1.00
ELE700084001	Administrative Technician	1.00
ELE700084002	Administrative Technician	1.00
ELE700084003	Administrative Technician	1.00
ELE700084005	Administrative Technician	1.00
ELE701505001	AMI Project Manager	1.00
ELE700395001	Assistant Electric Utility Director	1.00
ELE700395002	Assistant Electric Utility Director	1.00
ELE700395003	Assistant Electric Utility Director	1.00
ELE700395004	Assistant Electric Utility Director	1.00
ELE701067003	Associate/Assistant Electric Analyst	1.00
ELE701067004	Associate/Assistant Electric Analyst	1.00
ELE701067005	Associate/Assistant Electric Analyst	1.00
ELE701067006	Associate/Assistant Electric Analyst	1.00
ELE701067007	Associate/Assistant Electric Analyst	1.00
ELE701067008	Associate/Assistant Electric Analyst	1.00
ELE701067009	Associate/Assistant Electric Analyst	1.00
ELE701067001	Associate/Assistant Electric Analyst	1.00
ELE701067002	Associate/Assistant Electric Analyst	1.00
ELE701067010	Associate/Assistant Electric Analyst	1.00
ELE709200001	Customer Care Manager	1.00
ELE701548002	Data Management Specialist I/II	1.00
ELE701645001	Department Public Information Officer	1.00
ELE701312001	Electric Business Analyst I/II	1.00
ELE701312002	Electric Business Analyst I/II	1.00
ELE701312003	Electric Business Analyst I/II	1.00
ELE701312004	Electric Business Analyst I/II	1.00
ELE701312006	Electric Business Analyst I/II	1.00
ELE701312007	Electric Business Analyst I/II	1.00
ELE702335001	Electric Compliance Analyst I/II	1.00
ELE702335002	Electric Compliance Analyst I/II	1.00
ELE706285001	Electric Customer Programs and Public Affairs Supervisor	1.00
ELE702330002	Electric Drafting Technician I/II	1.00

ELE701117001	Electric Economic Development and Partnership Manager	1.00
ELE702345001	Electric Engineering Technician I/II	1.00
ELE702345003	Electric Engineering Technician I/II	1.00
ELE702345004	Electric Engineering Technician I/II	1.00
ELE702345005	Electric Engineering Technician I/II	1.00
ELE702284001	Electric Engineering Technician Supervisor	1.00
ELE702286001	Electric Line Troubleshooter	1.00
ELE702286002	Electric Line Troubleshooter	1.00
ELE702286003	Electric Line Troubleshooter	1.00
ELE702286004	Electric Line Troubleshooter	1.00
ELE702212001	Electric Materials Technician I/II	1.00
ELE702212002	Electric Materials Technician I/II	1.00
ELE702212003	Electric Materials Technician I/II	1.00
ELE702212004	Electric Materials Technician I/II	1.00
ELE702338001	Electric Operations Manager	1.00
ELE701130001	Electric Operations Safety Technician	1.00
ELE702339001	Electric Operations Supervisor	1.00
ELE702339002	Electric Operations Supervisor	1.00
ELE702254001	Electric Preventive Data System Technician	1.00
ELE702316001	Electric Resources Planner I/II	1.00
ELE702316002	Electric Resources Planner I/II	1.00
ELE702316003	Electric Resources Planner I/II	1.00
ELE702316005	Electric Resources Planner I/II	1.00
ELE702216001	Electric Risk and Compliance Supervisor	1.00
ELE702319001	Electric Substation Supervisor	1.00
ELE702350001	Electric System Dispatcher	1.00
ELE702350002	Electric System Dispatcher	1.00
ELE702350003	Electric System Dispatcher	1.00
ELE702359001	Electric Technology System Technician	1.00
ELE702359002	Electric Technology System Technician	1.00
ELE702359003	Electric Technology System Technician	1.00
ELE709560001	Electric Technology Systems Administrator	1.00
ELE701116001	Electric Utility Chief Operating Officer	1.00
ELE702320001	Electric Utility Director	1.00
ELE702215001	Electric Utility Financial Administrator	1.00
ELE709250001	Electric Utility Inspection Technician	1.00
ELE709250002	Electric Utility Inspection Technician	1.00
ELE709250003	Electric Utility Inspection Technician	1.00
ELE702285003	Electric/Apprentice Line Technician	1.00
ELE702285004	Electric/Apprentice Line Technician	1.00
ELE702285005	Electric/Apprentice Line Technician	1.00
ELE702285006	Electric/Apprentice Line Technician	1.00
ELE702285007	Electric/Apprentice Line Technician	1.00
ELE702285008	Electric/Apprentice Line Technician	1.00
ELE702285009	Electric/Apprentice Line Technician	1.00
ELE702285010	Electric/Apprentice Line Technician	1.00

ELE702285011	Electric/Apprentice Line Technician	1.00
ELE702285012	Electric/Apprentice Line Technician	1.00
ELE702285013	Electric/Apprentice Line Technician	1.00
ELE702285014	Electric/Apprentice Line Technician	1.00
ELE702285015	Electric/Apprentice Line Technician	1.00
ELE701085001	Electric/Apprentice Metering System Technician	1.00
ELE701085002	Electric/Apprentice Metering System Technician	1.00
ELE701085003	Electric/Apprentice Metering System Technician	1.00
ELE701085004	Electric/Apprentice Metering System Technician	1.00
ELE701085005	Electric/Apprentice Metering System Technician	1.00
ELE701083001	Electric/Apprentice Substation Technician	1.00
ELE701083002	Electric/Apprentice Substation Technician	1.00
ELE701083003	Electric/Apprentice Substation Technician	1.00
ELE701083004	Electric/Apprentice Substation Technician	1.00
ELE701083005	Electric/Apprentice Substation Technician	1.00
ELE701083006	Electric/Apprentice Substation Technician	1.00
ELE701083007	Electric/Apprentice Substation Technician	1.00
ELE701083008	Electric/Apprentice Substation Technician	1.00
ELE701083009	Electric/Apprentice Substation Technician	1.00
ELE701083010	Electric/Apprentice Substation Technician	1.00
ELE701083011	Electric/Apprentice Substation Technician	1.00
ELE701083012	Electric/Apprentice Substation Technician	1.00
ELE702466002	Energy Program Technician	1.00
ELE702466003	Energy Program Technician	1.00
ELE702501001	Energy Services Account Representative I/II	1.00
ELE702501002	Energy Services Account Representative I/II	1.00
ELE702501003	Energy Services Account Representative I/II	1.00
ELE701082001	Generation Maintenance Scheduler-Coordinator	1.00
ELE701648001	Government Relations Representative I/II	1.00
ELE703608001	Instrument and Control Technician	1.00
ELE703608002	Instrument and Control Technician	1.00
ELE703608003	Instrument and Control Technician	1.00
ELE704517001	Marketing and Communication Analyst I/II	1.00
ELE704517002	Marketing and Communication Analyst I/II	1.00
ELE704540001	Meter Reader	1.00
ELE704540002	Meter Reader	1.00
ELE704957001	Office Assistant I/II	1.00
ELE704957002	Office Assistant I/II	1.00
ELE704957003	Office Assistant I/II	1.00
ELE704957004	Office Assistant I/II	1.00
ELE705596001	Power Engineer I/II	1.00
ELE705596003	Power Engineer I/II	1.00
ELE705596004	Power Engineer I/II	1.00
ELE705600001	Power Generation Superintendent	1.00
ELE705591001	Power Plant Engineer I/II	1.00
ELE705591002	Power Plant Engineer I/II	1.00
ELE705526001	Power Plant Mechanic	1.00

ELE705526002	Power Plant Mechanic	1.00
ELE705526003	Power Plant Mechanic	1.00
ELE705530001	Power Plant Operations and Maintenance Supervisor	1.00
ELE705530002	Power Plant Operations and Maintenance Supervisor	1.00
ELE705523001	Power Plant Operator Technician I/II	1.00
ELE705523002	Power Plant Operator Technician I/II	1.00
ELE705523003	Power Plant Operator Technician I/II	1.00
ELE705523004	Power Plant Operator Technician I/II	1.00
ELE705523005	Power Plant Operator Technician I/II	1.00
ELE705523006	Power Plant Operator Technician I/II	1.00
ELE705523007	Power Plant Operator Technician I/II	1.00
ELE705523008	Power Plant Operator Technician I/II	1.00
ELE705523009	Power Plant Operator Technician I/II	1.00
ELE705535001	Power Supply and Portfolio Administrator	1.00
ELE701114001	Principal Power Engineer	1.00
ELE707128001	Senior Electric Business Analyst	1.00
ELE707128002	Senior Electric Business Analyst	1.00
ELE707128003	Senior Electric Business Analyst	1.00
ELE707128004	Senior Electric Business Analyst	1.00
ELE707118001	Senior Electric Line Technician	1.00
ELE707118002	Senior Electric Line Technician	1.00
ELE707118003	Senior Electric Line Technician	1.00
ELE707118004	Senior Electric Line Technician	1.00
ELE707118005	Senior Electric Line Technician	1.00
ELE707169001	Senior Electric Materials Technician	1.00
ELE701036001	Senior Electric Metering Systems Technician	1.00
ELE707126001	Senior Electric Substation Technician	1.00
ELE707126002	Senior Electric Substation Technician	1.00
ELE707126003	Senior Electric Substation Technician	1.00
ELE707168001	Senior Electric System Dispatcher	1.00
ELE701023001	Senior Electric Technology Systems Analyst	1.00
ELE707163001	Senior Energy Services Account Representative	1.00
ELE707163002	Senior Energy Services Account Representative	1.00
ELE707151001	Senior Power Engineer	1.00
ELE707151002	Senior Power Engineer	1.00
ELE705555001	Senior Power Plant Engineer	1.00
ELE707152001	Senior Power Plant Operator Technician	1.00
ELE707152002	Senior Power Plant Operator Technician	1.00
ELE707152003	Senior Power Plant Operator Technician	1.00
ELE707152004	Senior Power Plant Operator Technician	1.00
ELE701029001	Senior Utility Billing Analyst	1.00
ELE701029002	Senior Utility Billing Analyst	1.00
ELE701103001	Senior Utility Customer Service Field Representative	1.00
ELE701044001	Senior Utility Customer Service Specialist	1.00
ELE701044002	Senior Utility Customer Service Specialist	1.00

ELE701044003	Senior Utility Customer Service Specialist	1.00
ELE703315001	Utility Billing Analyst I/II	1.00
ELE703315002	Utility Billing Analyst I/II	1.00
ELE703315003	Utility Billing Analyst I/II	1.00
ELE703315004	Utility Billing Analyst I/II	1.00
ELE703315005	Utility Billing Analyst I/II	1.00
ELE701041001	Utility Billing and Field Services Supervisor	1.00
ELE701104001	Utility Customer Service Field Rep I/II	1.00
ELE701049001	Utility Customer Service Representative I/II	1.00
ELE701049004	Utility Customer Service Representative I/II	1.00
ELE701049005	Utility Customer Service Representative I/II	1.00
ELE701049006	Utility Customer Service Representative I/II	1.00
ELE701049007	Utility Customer Service Representative I/II	1.00
ELE701049008	Utility Customer Service Representative I/II	0.50
ELE701049009	Utility Customer Service Representative I/II	1.00
ELE701049010	Utility Customer Service Representative I/II	0.50
ELE701049011	Utility Customer Service Representative I/II	0.75
ELE701049012	Utility Customer Service Representative I/II	1.00
ELE701049013	Utility Customer Service Representative I/II	1.00
ELE701049014	Utility Customer Service Representative I/II	1.00
ELE701049015	Utility Customer Service Representative I/II	1.00
ELE701046001	Utility Customer Service Specialist I/II	1.00
ELE701046002	Utility Customer Service Specialist I/II	1.00
ELE701046003	Utility Customer Service Specialist I/II	1.00
ELE701046004	Utility Customer Service Specialist I/II	1.00
ELE701046005	Utility Customer Service Specialist I/II	1.00
ELE701042001	Utility Customer Service Supervisor	1.00
Total for Department:	**ELE Electric Department**	196.75

Position Code	Position Title	Allocated FTE
EUD740071001	Administrative Assistant	1.00
EUD740084005	Administrative Technician	1.00
EUD740084004	Administrative Technician	1.00
EUD740084003	Administrative Technician	1.00
EUD740084002	Administrative Technician	1.00
EUD740084001	Administrative Technician	1.00
EUD740411003	Assistant Environmental Utilities Director	1.00
EUD740411001	Assistant Environmental Utilities Director	1.00
EUD741005002	Associate (PE)/Assistant/Junior Engineer	1.00
EUD741005001	Associate (PE)/Assistant/Junior Engineer	1.00
EUD740820003	Associate Engineer	1.00
EUD740820002	Associate Engineer	1.00
EUD740820001	Associate Engineer	1.00
EUD741548003	Data Management Specialist I/II	1.00
EUD741548002	Data Management Specialist I/II	1.00

EUD741548001	Data Management Specialist I/II	1.00
EUD741645001	Department Public Information Officer	1.00
EUD741277001	Engineering Manager	1.00
EUD741350001	Engineering Technician I/II	1.00
EUD742544002	Environmental Compliance Specialist I/II	1.00
EUD742544001	Environmental Compliance Specialist I/II	1.00
EUD742547005	Environmental Utilities Business Analyst I/II	1.00
EUD742547004	Environmental Utilities Business Analyst I/II	1.00
EUD742547003	Environmental Utilities Business Analyst I/II	1.00
EUD742547002	Environmental Utilities Business Analyst I/II	1.00
EUD742547001	Environmental Utilities Business Analyst I/II	1.00
EUD742548002	Environmental Utilities Business Services Manager	1.00
EUD742541004	Environmental Utilities Compliance Administrator	1.00
EUD742541003	Environmental Utilities Compliance Administrator	1.00
EUD742541002	Environmental Utilities Compliance Administrator	1.00
EUD742541001	Environmental Utilities Compliance Administrator	1.00
EUD741684001	Environmental Utilities Director	1.00
EUD741038006	Environmental Utilities Instrument and Control Technician I/II	1.00
EUD741038005	Environmental Utilities Instrument and Control Technician I/II	1.00
EUD741038004	Environmental Utilities Instrument and Control Technician I/II	1.00
EUD741038003	Environmental Utilities Instrument and Control Technician I/II	1.00
EUD741038002	Environmental Utilities Instrument and Control Technician I/II	1.00
EUD741024001	Environmental Utilities Maintenance Superintendent	1.00
EUD741147001	Environmental Utilities Operations Superintendent	1.00
EUD749550001	ERP Business Analyst I/II	1.00
EUD743412003	GIS Analyst I/II	1.00
EUD743412002	GIS Analyst I/II	1.00
EUD743412001	GIS Analyst I/II	1.00
EUD741648001	Government Relations Representative I/II	1.00
EUD741136001	Industrial Waste Analyst	1.00
EUD743610002	Industrial Waste Technician	1.00
EUD743732002	Interpretive Services Specialist I/II	1.00
EUD743732001	Interpretive Services Specialist I/II	1.00
EUD741135004	Laboratory Analyst I/II	1.00
EUD741135003	Laboratory Analyst I/II	1.00
EUD741135002	Laboratory Analyst I/II	1.00
EUD741135001	Laboratory Analyst I/II	1.00
EUD740050002	Management Analyst I/II	1.00
EUD740050001	Management Analyst I/II	1.00
EUD744517003	Marketing and Communication Analyst I/II	1.00
EUD744517002	Marketing and Communication Analyst I/II	1.00
EUD744520002	Materials Technician	1.00

EUD744520001	Materials Technician	1.00
EUD744957012	Office Assistant I/II	1.00
EUD744957011	Office Assistant I/II	1.00
EUD744957010	Office Assistant I/II	1.00
EUD744957009	Office Assistant I/II	1.00
EUD744957008	Office Assistant I/II	1.00
EUD744957006	Office Assistant I/II	1.00
EUD744957005	Office Assistant I/II	1.00
EUD744957004	Office Assistant I/II	1.00
EUD744957003	Office Assistant I/II	1.00
EUD744957002	Office Assistant I/II	1.00
EUD741028001	Organics Truck Driver	1.00
EUD745319003	Plant and Equipment Maintenance Worker I/II	1.00
EUD745319002	Plant and Equipment Maintenance Worker I/II	1.00
EUD745319001	Plant and Equipment Maintenance Worker I/II	1.00
EUD745328006	Plant and Equipment Mechanic I/II	1.00
EUD745328005	Plant and Equipment Mechanic I/II	1.00
EUD745328004	Plant and Equipment Mechanic I/II	1.00
EUD745328003	Plant and Equipment Mechanic I/II	1.00
EUD745328002	Plant and Equipment Mechanic I/II	1.00
EUD745328001	Plant and Equipment Mechanic I/II	1.00
EUD745402001	Predictive Maintenance Technician I/II	1.00
EUD745533002	Preventative Maintenance Coordinator	1.00
EUD745533001	Preventative Maintenance Coordinator	1.00
EUD745519003	Preventative Maintenance Supervisor	1.00
EUD745519002	Preventative Maintenance Supervisor	1.00
EUD745519001	Preventative Maintenance Supervisor	1.00
EUD745502005	Preventative Maintenance Technician I/II	1.00
EUD745502004	Preventative Maintenance Technician I/II	1.00
EUD745502003	Preventative Maintenance Technician I/II	1.00
EUD745502002	Preventative Maintenance Technician I/II	1.00
EUD745502001	Preventative Maintenance Technician I/II	1.00
EUD745514002	Principal Engineer	1.00
EUD745514001	Principal Engineer	1.00
EUD741004001	Process Engineer	1.00
EUD746150001	Recycling and Organics Coordinator	1.00
EUD746244001	Refuse and Stormwater Manager	1.00
EUD746226005	Refuse Maintenance Worker I/II	1.00
EUD746226004	Refuse Maintenance Worker I/II	1.00
EUD746226003	Refuse Maintenance Worker I/II	1.00
EUD746226002	Refuse Maintenance Worker I/II	1.00
EUD746226001	Refuse Maintenance Worker I/II	1.00
EUD746231001	Refuse Superintendent	1.00
EUD746235004	Refuse Supervisor	1.00
EUD746235003	Refuse Supervisor	1.00
EUD746235002	Refuse Supervisor	1.00
EUD746235001	Refuse Supervisor	1.00

EUD746304042	Refuse Truck Driver I/II	1.00
EUD746304040	Refuse Truck Driver I/II	1.00
EUD746304039	Refuse Truck Driver I/II	1.00
EUD746304036	Refuse Truck Driver I/II	1.00
EUD746304035	Refuse Truck Driver I/II	1.00
EUD746304034	Refuse Truck Driver I/II	1.00
EUD746304031	Refuse Truck Driver I/II	1.00
EUD746304030	Refuse Truck Driver I/II	1.00
EUD746304028	Refuse Truck Driver I/II	1.00
EUD746304027	Refuse Truck Driver I/II	1.00
EUD746304026	Refuse Truck Driver I/II	1.00
EUD746304025	Refuse Truck Driver I/II	1.00
EUD746304024	Refuse Truck Driver I/II	1.00
EUD746304023	Refuse Truck Driver I/II	1.00
EUD746304022	Refuse Truck Driver I/II	1.00
EUD746304021	Refuse Truck Driver I/II	1.00
EUD746304020	Refuse Truck Driver I/II	1.00
EUD746304019	Refuse Truck Driver I/II	1.00
EUD746304018	Refuse Truck Driver I/II	1.00
EUD746304017	Refuse Truck Driver I/II	1.00
EUD746304016	Refuse Truck Driver I/II	1.00
EUD746304015	Refuse Truck Driver I/II	1.00
EUD746304014	Refuse Truck Driver I/II	1.00
EUD746304013	Refuse Truck Driver I/II	1.00
EUD746304012	Refuse Truck Driver I/II	1.00
EUD746304011	Refuse Truck Driver I/II	1.00
EUD746304010	Refuse Truck Driver I/II	1.00
EUD746304009	Refuse Truck Driver I/II	1.00
EUD746304008	Refuse Truck Driver I/II	1.00
EUD746304007	Refuse Truck Driver I/II	1.00
EUD746304006	Refuse Truck Driver I/II	1.00
EUD746304005	Refuse Truck Driver I/II	1.00
EUD746304004	Refuse Truck Driver I/II	1.00
EUD746304003	Refuse Truck Driver I/II	1.00
EUD746304002	Refuse Truck Driver I/II	1.00
EUD746304001	Refuse Truck Driver I/II	1.00
EUD746500002	Safety Coordinator	1.00
EUD746500001	Safety Coordinator	1.00
EUD747020002	SCADA System Technician	1.00
EUD747020001	SCADA System Technician	1.00
EUD747142005	Senior Engineer	1.00
EUD747142004	Senior Engineer	1.00
EUD747142003	Senior Engineer	1.00
EUD747142002	Senior Engineer	1.00
EUD747142001	Senior Engineer	1.00
EUD747162001	Senior Engineering Technician	1.00
EUD741065001	Senior Environmental Utilities Business Analyst	1.00

EUD741123001	Senior Environmental Utilities Instrument & Control Technician	1.00
EUD747161001	Senior GIS Analyst	1.00
EUD743733001	Senior Interpretive Services Specialist	1.00
EUD741133002	Senior Laboratory Analyst	1.00
EUD741133001	Senior Laboratory Analyst	1.00
EUD747284003	Senior Preventative Maintenance Technician	1.00
EUD747284002	Senior Preventative Maintenance Technician	1.00
EUD747284001	Senior Preventative Maintenance Technician	1.00
EUD747129007	Senior Refuse Truck Driver	1.00
EUD747129006	Senior Refuse Truck Driver	1.00
EUD747129005	Senior Refuse Truck Driver	1.00
EUD747129004	Senior Refuse Truck Driver	1.00
EUD747129003	Senior Refuse Truck Driver	1.00
EUD747129002	Senior Refuse Truck Driver	1.00
EUD747129001	Senior Refuse Truck Driver	1.00
EUD749559001	Senior SCADA System Technician	1.00
EUD741279001	Senior Solid Waste Billing Technician	1.00
EUD747202006	Senior Wastewater Utility Maintenance Worker	1.00
EUD747202004	Senior Wastewater Utility Maintenance Worker	1.00
EUD747202003	Senior Wastewater Utility Maintenance Worker	1.00
EUD747202002	Senior Wastewater Utility Maintenance Worker	1.00
EUD747202001	Senior Wastewater Utility Maintenance Worker	1.00
EUD747202005	Senior Wastewater Utility Maintenance Worker	1.00
EUD747204008	Senior Water Distribution Worker	1.00
EUD747204007	Senior Water Distribution Worker	1.00
EUD747204006	Senior Water Distribution Worker	1.00
EUD747204005	Senior Water Distribution Worker	1.00
EUD747204004	Senior Water Distribution Worker	1.00
EUD747204003	Senior Water Distribution Worker	1.00
EUD747204002	Senior Water Distribution Worker	1.00
EUD747204001	Senior Water Distribution Worker	1.00
EUD747324001	Solid Waste Billing Technician	1.00
EUD741102001	Utility Exploration Center Supervisor	1.00
EUD741646001	Utility Government Relations Administrator	1.00
EUD741099002	Waste Services Clerk I/II	1.00
EUD741099001	Waste Services Clerk I/II	1.00
EUD741128001	Waste Services Field Enforcement Inspector	1.00
EUD748980001	Wastewater Collection Superintendent	1.00
EUD748978003	Wastewater Collection Supervisor	1.00
EUD748978002	Wastewater Collection Supervisor	1.00
EUD748978001	Wastewater Collection Supervisor	1.00
EUD749040001	Wastewater Treatment Plant Chief Operator	1.00
EUD749025009	Wastewater Treatment Plant Operator Grade I/II/III 8Hr	1.00
EUD749025006	Wastewater Treatment Plant Operator Grade I/II/III 8Hr	1.00

EUD749025005	Wastewater Treatment Plant Operator Grade I/II/III 8Hr	1.00
EUD749025004	Wastewater Treatment Plant Operator Grade I/II/III 8Hr	1.00
EUD749025003	Wastewater Treatment Plant Operator Grade I/II/III 8Hr	1.00
EUD749025002	Wastewater Treatment Plant Operator Grade I/II/III 8Hr	1.00
EUD749025001	Wastewater Treatment Plant Operator Grade I/II/III 8Hr	1.00
EUD749025010	Wastewater Treatment Plant Operator Grade III 24Hr	1.00
EUD749025007	Wastewater Treatment Plant Operator Grade III 24Hr	1.00
EUD749020004	Wastewater Treatment Plant Operator Grade III 24Hr	1.00
EUD749020003	Wastewater Treatment Plant Operator Grade III 24Hr	1.00
EUD749020002	Wastewater Treatment Plant Operator Grade III 24Hr	1.00
EUD749020001	Wastewater Treatment Plant Operator Grade III 24Hr	1.00
EUD749030002	Wastewater Treatment Plant Operator Grade IV	1.00
EUD749030001	Wastewater Treatment Plant Operator Grade IV	1.00
EUD749029027	Wastewater Utility Maintenance Worker I/II	1.00
EUD749029026	Wastewater Utility Maintenance Worker I/II	1.00
EUD749029025	Wastewater Utility Maintenance Worker I/II	1.00
EUD749029024	Wastewater Utility Maintenance Worker I/II	1.00
EUD749029022	Wastewater Utility Maintenance Worker I/II	1.00
EUD749029021	Wastewater Utility Maintenance Worker I/II	1.00
EUD749029020	Wastewater Utility Maintenance Worker I/II	1.00
EUD749029019	Wastewater Utility Maintenance Worker I/II	1.00
EUD749029018	Wastewater Utility Maintenance Worker I/II	1.00
EUD749029017	Wastewater Utility Maintenance Worker I/II	1.00
EUD749029016	Wastewater Utility Maintenance Worker I/II	1.00
EUD749029015	Wastewater Utility Maintenance Worker I/II	1.00
EUD749029014	Wastewater Utility Maintenance Worker I/II	1.00
EUD749029013	Wastewater Utility Maintenance Worker I/II	1.00
EUD749029012	Wastewater Utility Maintenance Worker I/II	1.00
EUD749029011	Wastewater Utility Maintenance Worker I/II	1.00
EUD749029010	Wastewater Utility Maintenance Worker I/II	1.00
EUD749029009	Wastewater Utility Maintenance Worker I/II	1.00
EUD749029008	Wastewater Utility Maintenance Worker I/II	1.00
EUD749029007	Wastewater Utility Maintenance Worker I/II	1.00
EUD749029006	Wastewater Utility Maintenance Worker I/II	1.00
EUD749029005	Wastewater Utility Maintenance Worker I/II	1.00
EUD749029004	Wastewater Utility Maintenance Worker I/II	1.00
EUD749029003	Wastewater Utility Maintenance Worker I/II	1.00
EUD749029002	Wastewater Utility Maintenance Worker I/II	1.00
EUD749029001	Wastewater Utility Maintenance Worker I/II	1.00
EUD749029023	Wastewater Utility Maintenance Worker I/II	1.00

EUD749045001	Wastewater Utility Manager	1.00
EUD749047001	Water Conservation Administrator	1.00
EUD749078001	Water Conservation Specialist	1.00
EUD749051005	Water Conservation Worker I/II	1.00
EUD749051004	Water Conservation Worker I/II	1.00
EUD749051003	Water Conservation Worker I/II	1.00
EUD749051002	Water Conservation Worker I/II	1.00
EUD749051001	Water Conservation Worker I/II	1.00
EUD749085001	Water Distribution Superintendent	1.00
EUD749084004	Water Distribution Supervisor	1.00
EUD749084003	Water Distribution Supervisor	1.00
EUD749084002	Water Distribution Supervisor	1.00
EUD749084001	Water Distribution Supervisor	1.00
EUD749248026	Water Distribution Worker I/II	1.00
EUD749248025	Water Distribution Worker I/II	1.00
EUD749248001	Water Distribution Worker I/II	1.00
EUD749248002	Water Distribution Worker I/II	1.00
EUD749248003	Water Distribution Worker I/II	1.00
EUD749248004	Water Distribution Worker I/II	1.00
EUD749248005	Water Distribution Worker I/II	1.00
EUD749248006	Water Distribution Worker I/II	1.00
EUD749248007	Water Distribution Worker I/II	1.00
EUD749248008	Water Distribution Worker I/II	1.00
EUD749248009	Water Distribution Worker I/II	1.00
EUD749248010	Water Distribution Worker I/II	1.00
EUD749248011	Water Distribution Worker I/II	1.00
EUD749248012	Water Distribution Worker I/II	1.00
EUD749248013	Water Distribution Worker I/II	1.00
EUD749248014	Water Distribution Worker I/II	1.00
EUD749248015	Water Distribution Worker I/II	1.00
EUD749248016	Water Distribution Worker I/II	1.00
EUD749248017	Water Distribution Worker I/II	1.00
EUD749248018	Water Distribution Worker I/II	1.00
EUD749248019	Water Distribution Worker I/II	1.00
EUD749248020	Water Distribution Worker I/II	1.00
EUD749248021	Water Distribution Worker I/II	1.00
EUD749248022	Water Distribution Worker I/II	1.00
EUD749248023	Water Distribution Worker I/II	1.00
EUD749248024	Water Distribution Worker I/II	1.00
EUD749101001	Water Quality Lab Supervisor	1.00
EUD749101002	Water Quality Lab Supervisor	1.00
EUD741053001	Water Quality Technician	1.00
EUD749175001	Water Treatment Plant Chief Operator	1.00
EUD749230006	Water Treatment Plant Operator Grade I/II/III 24Hr	1.00
EUD749230005	Water Treatment Plant Operator Grade I/II/III 24Hr	1.00
EUD749230004	Water Treatment Plant Operator Grade I/II/III 24Hr	1.00
EUD749230003	Water Treatment Plant Operator Grade I/II/III 24Hr	1.00

EUD749230002	Water Treatment Plant Operator Grade I/II/III 24Hr	1.00
EUD749230001	Water Treatment Plant Operator Grade I/II/III 24Hr	1.00
EUD749244001	Water Utility Manager	1.00
Total for Department:	**EUD Environmental Utilities Department**	285.00

Position Code	Position Title	Allocated FTE
FIR480071001	Administrative Assistant	1.00
FIR480084001	Administrative Technician	1.00
FIR480480001	Assistant Fire Chief	1.00
FIR481645001	Department Public Information Officer	1.00
FIR482415001	EMS Quality Assurance Coordinator	1.00
FIR481022001	Fire and Environmental Inspection Supervisor	1.00
FIR483377005	Fire and Environmental Safety Inspector I/II	1.00
FIR483377004	Fire and Environmental Safety Inspector I/II	1.00
FIR483377003	Fire and Environmental Safety Inspector I/II	1.00
FIR483377002	Fire and Environmental Safety Inspector I/II	1.00
FIR483377001	Fire and Environmental Safety Inspector I/II	1.00
FIR480905007	Fire Battalion Chief	1.00
FIR480905006	Fire Battalion Chief	1.00
FIR480905004	Fire Battalion Chief	1.00
FIR480905003	Fire Battalion Chief	1.00
FIR480905002	Fire Battalion Chief	1.00
FIR480905001	Fire Battalion Chief	1.00
FIR480905005	Fire Battalion Chief	1.00
FIR483320034	Fire Captain	1.00
FIR483320033	Fire Captain	1.00
FIR483320032	Fire Captain	1.00
FIR483320030	Fire Captain	1.00
FIR483320029	Fire Captain	1.00
FIR483320028	Fire Captain	1.00
FIR483320027	Fire Captain	1.00
FIR483320026	Fire Captain	1.00
FIR483320025	Fire Captain	1.00
FIR483320024	Fire Captain	1.00
FIR483320023	Fire Captain	1.00
FIR483320022	Fire Captain	1.00
FIR483320021	Fire Captain	1.00
FIR483320020	Fire Captain	1.00
FIR483320019	Fire Captain	1.00
FIR483320018	Fire Captain	1.00
FIR483320017	Fire Captain	1.00
FIR483320016	Fire Captain	1.00
FIR483320015	Fire Captain	1.00
FIR483320014	Fire Captain	1.00

FIR483320013	Fire Captain	1.00
FIR483320012	Fire Captain	1.00
FIR483320011	Fire Captain	1.00
FIR483320010	Fire Captain	1.00
FIR483320009	Fire Captain	1.00
FIR483320008	Fire Captain	1.00
FIR483320007	Fire Captain	1.00
FIR483320006	Fire Captain	1.00
FIR483320005	Fire Captain	1.00
FIR483320004	Fire Captain	1.00
FIR483320003	Fire Captain	1.00
FIR483320002	Fire Captain	1.00
FIR483320001	Fire Captain	1.00
FIR483320031	Fire Captain (8 Hr)	1.00
FIR483330001	Fire Chief	1.00
FIR483332002	Fire Division Chief	1.00
FIR483332001	Fire Division Chief	1.00
FIR483340033	Fire Engineer	1.00
FIR483340032	Fire Engineer	1.00
FIR483340031	Fire Engineer	1.00
FIR483340030	Fire Engineer	1.00
FIR483340029	Fire Engineer	1.00
FIR483340028	Fire Engineer	1.00
FIR483340027	Fire Engineer	1.00
FIR483340026	Fire Engineer	1.00
FIR483340025	Fire Engineer	1.00
FIR483340024	Fire Engineer	1.00
FIR483340023	Fire Engineer	1.00
FIR483340022	Fire Engineer	1.00
FIR483340021	Fire Engineer	1.00
FIR483340020	Fire Engineer	1.00
FIR483340019	Fire Engineer	1.00
FIR483340018	Fire Engineer	1.00
FIR483340017	Fire Engineer	1.00
FIR483340016	Fire Engineer	1.00
FIR483340015	Fire Engineer	1.00
FIR483340014	Fire Engineer	1.00
FIR483340013	Fire Engineer	1.00
FIR483340012	Fire Engineer	1.00
FIR483340011	Fire Engineer	1.00
FIR483340010	Fire Engineer	1.00
FIR483340009	Fire Engineer	1.00
FIR483340008	Fire Engineer	1.00
FIR483340007	Fire Engineer	1.00
FIR483340006	Fire Engineer	1.00
FIR483340005	Fire Engineer	1.00
FIR483340004	Fire Engineer	1.00

FIR483340003	Fire Engineer	1.00
FIR483340002	Fire Engineer	1.00
FIR483340001	Fire Engineer	1.00
FIR483355039	Firefighter Paramedic I/II	1.00
FIR483355038	Firefighter Paramedic I/II	1.00
FIR483355037	Firefighter Paramedic I/II	1.00
FIR483355036	Firefighter Paramedic I/II	1.00
FIR483355035	Firefighter Paramedic I/II	1.00
FIR483355034	Firefighter Paramedic I/II	1.00
FIR483355033	Firefighter Paramedic I/II	1.00
FIR483355032	Firefighter Paramedic I/II	1.00
FIR483355031	Firefighter Paramedic I/II	1.00
FIR483355030	Firefighter Paramedic I/II	1.00
FIR483355029	Firefighter Paramedic I/II	1.00
FIR483355028	Firefighter Paramedic I/II	1.00
FIR483355027	Firefighter Paramedic I/II	1.00
FIR483355026	Firefighter Paramedic I/II	1.00
FIR483355025	Firefighter Paramedic I/II	1.00
FIR483355024	Firefighter Paramedic I/II	1.00
FIR483355023	Firefighter Paramedic I/II	1.00
FIR483355022	Firefighter Paramedic I/II	1.00
FIR483355021	Firefighter Paramedic I/II	1.00
FIR483355020	Firefighter Paramedic I/II	1.00
FIR483355019	Firefighter Paramedic I/II	1.00
FIR483355018	Firefighter Paramedic I/II	1.00
FIR483355017	Firefighter Paramedic I/II	1.00
FIR483355016	Firefighter Paramedic I/II	1.00
FIR483355015	Firefighter Paramedic I/II	1.00
FIR483355014	Firefighter Paramedic I/II	1.00
FIR483355013	Firefighter Paramedic I/II	1.00
FIR483355012	Firefighter Paramedic I/II	1.00
FIR483355011	Firefighter Paramedic I/II	1.00
FIR483355010	Firefighter Paramedic I/II	1.00
FIR483355009	Firefighter Paramedic I/II	1.00
FIR483355008	Firefighter Paramedic I/II	1.00
FIR483355007	Firefighter Paramedic I/II	1.00
FIR483355006	Firefighter Paramedic I/II	1.00
FIR483355005	Firefighter Paramedic I/II	1.00
FIR483355004	Firefighter Paramedic I/II	1.00
FIR483355003	Firefighter Paramedic I/II	1.00
FIR483355002	Firefighter Paramedic I/II	1.00
FIR483355001	Firefighter Paramedic I/II	1.00
FIR483412001	GIS Analyst I/II	1.00
FIR480050001	Management Analyst I/II	1.00
FIR484957001	Office Assistant I/II	1.00
Total for Department:	**FIR Fire Department**	130.00

Position Code	Position Title	Allocated FTE
FIN240040003	Accountant I/II	1.00
FIN240040002	Accountant I/II	1.00
FIN240040001	Accountant I/II	1.00
FIN241370001	Accounting Manager	1.00
FIN240043001	Accounting Supervisor	1.00
FIN249427001	Accounts Payable Supervisor	1.00
FIN240084002	Administrative Technician	1.00
FIN240084001	Administrative Technician	1.00
FIN241021001	Assistant City Manager/Chief Financial Officer	1.00
FIN2421026001	Assistant Finance Director	1.00
FIN240915004	Budget Analyst I/II	1.00
FIN240915003	Budget Analyst I/II	1.00
FIN240915002	Budget Analyst I/II	1.00
FIN240915001	Budget Analyst I/II	1.00
FIN240930001	Budget Manager	1.00
FIN241060004	Buyer I/II	1.00
FIN241060003	Buyer I/II	1.00
FIN241060002	Buyer I/II	1.00
FIN241060001	Buyer I/II	1.00
FIN249550004	ERP Business Analyst I/II	1.00
FIN249550003	ERP Business Analyst I/II	1.00
FIN249550002	ERP Business Analyst I/II	1.00
FIN249550001	ERP Business Analyst I/II	1.00
FIN246520001	ERP Program Manager	1.00
FIN242900001	Finance Manager	1.00
FIN243326007	Finance Technician I/II	1.00
FIN243326006	Finance Technician I/II	1.00
FIN243326005	Finance Technician I/II	1.00
FIN243326004	Finance Technician I/II	1.00
FIN243326003	Finance Technician I/II	1.00
FIN243326002	Finance Technician I/II	1.00
FIN243326001	Finance Technician I/II	1.00
FIN240050002	Management Analyst I/II	1.00
FIN240050001	Management Analyst I/II	1.00
FIN244457001	Management Assistant I/II	1.00
FIN241124002	Payroll Analyst I/II	1.00
FIN241124001	Payroll Analyst I/II	1.00
FIN249428001	Payroll Supervisor	1.00
FIN245101004	Payroll Technician I/II	0.60
FIN245101003	Payroll Technician I/II	1.00
FIN245101002	Payroll Technician I/II	1.00
FIN245101001	Payroll Technician I/II	1.00
FIN245652001	Purchasing and Warehouse Manager	1.00
FIN241129004	Purchasing Supervisor	1.00

FIN241051003	Senior Accountant	1.00
FIN241051002	Senior Accountant	1.00
FIN241051001	Senior Accountant	1.00
FIN247139001	Senior Buyer	1.00
FIN247147001	Senior Finance Technician	1.00
FIN247141001	Senior Payroll Technician	1.00
FIN247203001	Inventory Supply and Control Technician	1.00
FIN248952002	Inventory Supply and Control Worker I/II	1.00
FIN248952001	Inventory Supply and Control Worker I/II	1.00

Total for Department:	**FIN Finance Department**	52.60

Position Code	Position Title	Allocated FTE
HRD280071001	Administrative Assistant	1.000
HRD280484001	Assistant Human Resources Director	1.000
HRD283596004	Human Resources Analyst I/II	1.000
HRD283596003	Human Resources Analyst I/II	1.000
HRD283596002	Human Resources Analyst I/II	1.000
HRD283596001	Human Resources Analyst I/II	1.000
HRD283598001	Human Resources Director	1.000
HRD283599001	Human Resources Manager	1.000
HRD285235008	Human Resources Technician	1.000
HRD285235007	Human Resources Technician	1.000
HRD285235006	Human Resources Technician	1.000
HRD285235005	Human Resources Technician	1.000
HRD285235004	Human Resources Technician	1.000
HRD285235003	Human Resources Technician	1.000
HRD285235002	Human Resources Technician	1.000
HRD285235001	Human Resources Technician	1.000
HRD286450001	Risk Manager	1.000
HRD287178002	Senior Human Resources Technician	1.000
HRD287178001	Senior Human Resources Technician	1.000

Total for Department:	**HRD Human Resources Department**	19.000

Position Code	Position Title	Allocated FTE
ITD320084001	Administrative Technician	1.00
ITD329558002	Assistant Information Technology Director	1.00
ITD329558001	Assistant Information Technology Director	1.00
ITD321362013	Business Systems Analyst I/II	1.00
ITD321362012	Business Systems Analyst I/II	1.00
ITD321362011	Business Systems Analyst I/II	1.00
ITD321362010	Business Systems Analyst I/II	1.00
ITD321362009	Business Systems Analyst I/II	1.00
ITD321362007	Business Systems Analyst I/II	1.00

ITD321362005	Business Systems Analyst I/II	1.00
ITD321362004	Business Systems Analyst I/II	1.00
ITD321362003	Business Systems Analyst I/II	1.00
ITD321362002	Business Systems Analyst I/II	1.00
ITD321362001	Business Systems Analyst I/II	1.00
ITD321180001	Chief Information Officer	1.00
ITD321552007	Database Analyst I/II	1.00
ITD321552006	Database Analyst I/II	1.00
ITD321552004	Database Analyst I/II	1.00
ITD321552003	Database Analyst I/II	1.00
ITD321552002	Database Analyst I/II	1.00
ITD321552001	Database Analyst I/II	1.00
ITD323625001	Information Security Administrator	1.00
ITD323794013	Information Technology Analyst I/II	1.00
ITD323794012	Information Technology Analyst I/II	1.00
ITD323794010	Information Technology Analyst I/II	1.00
ITD323794009	Information Technology Analyst I/II	1.00
ITD323794007	Information Technology Analyst I/II	1.00
ITD323794006	Information Technology Analyst I/II	1.00
ITD323794002	Information Technology Analyst I/II	1.00
ITD323794001	Information Technology Analyst I/II	1.00
ITD329542001	Information Technology Client Services Supervisor	1.00
ITD323602005	Information Technology Program Manager	1.00
ITD323602004	Information Technology Program Manager	1.00
ITD323602003	Information Technology Program Manager	1.00
ITD323602002	Information Technology Program Manager	1.00
ITD323602001	Information Technology Program Manager	1.00
ITD323618004	Information Technology Technician I/II	1.00
ITD323618003	Information Technology Technician I/II	1.00
ITD323618001	Information Technology Technician I/II	1.00
ITD320050001	Management Analyst I/II	1.00
ITD321089003	Security Analyst I/II	1.00
ITD321089002	Security Analyst I/II	1.00
ITD321090001	Security Architect	1.00
ITD327130003	Senior Business Systems Analyst	1.00
ITD327130002	Senior Business Systems Analyst	1.00
ITD327130001	Senior Business Systems Analyst	1.00
ITD327145001	Senior Database Analyst	1.00
ITD327194001	Senior Information Technology Analyst	1.00
ITD327149003	Senior Information Technology Technician	1.00
ITD327149001	Senior Information Technology Technician	1.00
ITD321091008	Systems Architect	1.00
ITD321091007	Systems Architect	1.00
ITD321091006	Systems Architect	1.00
ITD321091005	Systems Architect	1.00
ITD321091004	Systems Architect	1.00
ITD321091003	Systems Architect	1.00

ITD321091002	Systems Architect	1.00
ITD321091001	Systems Architect	1.00

Total for Department:	**ITD Information Technology Department**	58.00

Position Code	Position Title	Allocated FTE
PAC181645002	Department Public Information Officer	1.00
PAC181645001	Department Public Information Officer	1.00
PAC181659001	Deputy City Manager	1.00
PAC181109001	Digital Content Analyst	1.00
CMO143451001	Government Relations Administrator	1.00
PAC184517002	Marketing and Communication Analyst I/II	1.00
PAC184517001	Marketing and Communication Analyst I/II	1.00
PAC181108001	Public Affairs and Communication Manager	1.00
PAC188426001	Video and Multimedia Technician	1.00

Total for Department:	**PAC Public Affairs and Communications**	9.00

Position Code	Position Title	Allocated FTE
POL440071001	Administrative Assistant	1.00
POL440100003	Animal Control Officer	1.00
POL440100002	Animal Control Officer	1.00
POL440100001	Animal Control Officer	1.00
POL440110001	Animal Control Supervisor	1.00
POL441430004	Communications Supervisor	1.00
POL441430003	Communications Supervisor	1.00
POL441430002	Communications Supervisor	1.00
POL441430001	Communications Supervisor	1.00
POL441380011	Community Services Officer I/II	1.00
POL441380010	Community Services Officer I/II	1.00
POL441380009	Community Services Officer I/II	1.00
POL441380008	Community Services Officer I/II	1.00
POL441380007	Community Services Officer I/II	1.00
POL441380006	Community Services Officer I/II	1.00
POL441380005	Community Services Officer I/II	1.00
POL441380004	Community Services Officer I/II	1.00
POL441380003	Community Services Officer I/II	1.00
POL441380002	Community Services Officer I/II	1.00
POL441380001	Community Services Officer I/II	1.00
POL441146001	Crime Analysis Supervisor	1.00
POL441475002	Crime Analyst	1.00
POL441700021	Dispatcher I/II	1.00
POL441700020	Dispatcher I/II	1.00
POL441700019	Dispatcher I/II	1.00
POL441700018	Dispatcher I/II	1.00

POL441700017	Dispatcher I/II	1.00
POL441700016	Dispatcher I/II	1.00
POL441700015	Dispatcher I/II	1.00
POL441700014	Dispatcher I/II	1.00
POL441700013	Dispatcher I/II	1.00
POL441700012	Dispatcher I/II	1.00
POL441700011	Dispatcher I/II	1.00
POL441700010	Dispatcher I/II	1.00
POL441700009	Dispatcher I/II	1.00
POL441700008	Dispatcher I/II	1.00
POL441700007	Dispatcher I/II	1.00
POL441700006	Dispatcher I/II	1.00
POL441700005	Dispatcher I/II	1.00
POL441700004	Dispatcher I/II	1.00
POL441700003	Dispatcher I/II	1.00
POL441700002	Dispatcher I/II	1.00
POL441700001	Dispatcher I/II	1.00
POL440050001	Management Analyst I/II	1.00
POL445400003	Police Captain	1.00
POL445400002	Police Captain	1.00
POL445400001	Police Captain	1.00
POL445410001	Police Chief	1.00
POL445420008	Police Lieutenant	1.00
POL445420007	Police Lieutenant	1.00
POL445420006	Police Lieutenant	1.00
POL445420005	Police Lieutenant	1.00
POL445420004	Police Lieutenant	1.00
POL445420003	Police Lieutenant	1.00
POL445420002	Police Lieutenant	1.00
POL445420001	Police Lieutenant	1.00
POL445430126	Police Officer/Police Trainee	1.00
POL445430125	Police Officer/Police Trainee	1.00
POL445430124	Police Officer/Police Trainee	1.00
POL445430123	Police Officer/Police Trainee	1.00
POL445430122	Police Officer/Police Trainee	1.00
POL445430121	Police Officer/Police Trainee	1.00
POL445430120	Police Officer/Police Trainee	1.00
POL445430119	Police Officer/Police Trainee	1.00
POL445430118	Police Officer/Police Trainee	1.00
POL445430117	Police Officer/Police Trainee	1.00
POL445430116	Police Officer/Police Trainee	1.00
POL445430115	Police Officer/Police Trainee	1.00
POL445430114	Police Officer/Police Trainee	1.00
POL445430113	Police Officer/Police Trainee	1.00
POL445430112	Police Officer/Police Trainee	1.00
POL445430111	Police Officer/Police Trainee	1.00
POL445430110	Police Officer/Police Trainee	1.00

POL445430109	Police Officer/Police Trainee	1.00
POL445430108	Police Officer/Police Trainee	1.00
POL445430107	Police Officer/Police Trainee	1.00
POL445430106	Police Officer/Police Trainee	1.00
POL445430105	Police Officer/Police Trainee	1.00
POL445430104	Police Officer/Police Trainee	1.00
POL445430103	Police Officer/Police Trainee	1.00
POL445430102	Police Officer/Police Trainee	1.00
POL445430101	Police Officer/Police Trainee	1.00
POL445430100	Police Officer/Police Trainee	1.00
POL445430099	Police Officer/Police Trainee	1.00
POL445430098	Police Officer/Police Trainee	1.00
POL445430097	Police Officer/Police Trainee	1.00
POL445430096	Police Officer/Police Trainee	1.00
POL445430095	Police Officer/Police Trainee	1.00
POL445430094	Police Officer/Police Trainee	1.00
POL445430093	Police Officer/Police Trainee	1.00
POL445430092	Police Officer/Police Trainee	1.00
POL445430091	Police Officer/Police Trainee	1.00
POL445430090	Police Officer/Police Trainee	1.00
POL445430089	Police Officer/Police Trainee	1.00
POL445430088	Police Officer/Police Trainee	1.00
POL445430087	Police Officer/Police Trainee	1.00
POL445430086	Police Officer/Police Trainee	1.00
POL445430085	Police Officer/Police Trainee	1.00
POL445430084	Police Officer/Police Trainee	1.00
POL445430083	Police Officer/Police Trainee	1.00
POL445430082	Police Officer/Police Trainee	1.00
POL445430081	Police Officer/Police Trainee	1.00
POL445430080	Police Officer/Police Trainee	1.00
POL445430079	Police Officer/Police Trainee	1.00
POL445430078	Police Officer/Police Trainee	1.00
POL445430077	Police Officer/Police Trainee	1.00
POL445430076	Police Officer/Police Trainee	1.00
POL445430075	Police Officer/Police Trainee	1.00
POL445430074	Police Officer/Police Trainee	1.00
POL445430073	Police Officer/Police Trainee	1.00
POL445430072	Police Officer/Police Trainee	1.00
POL445430071	Police Officer/Police Trainee	1.00
POL445430070	Police Officer/Police Trainee	1.00
POL445430069	Police Officer/Police Trainee	1.00
POL445430068	Police Officer/Police Trainee	1.00
POL445430067	Police Officer/Police Trainee	1.00
POL445430066	Police Officer/Police Trainee	1.00
POL445430065	Police Officer/Police Trainee	1.00
POL445430064	Police Officer/Police Trainee	1.00
POL445430063	Police Officer/Police Trainee	1.00

POL445430062	Police Officer/Police Trainee	1.00
POL445430061	Police Officer/Police Trainee	1.00
POL445430060	Police Officer/Police Trainee	1.00
POL445430059	Police Officer/Police Trainee	1.00
POL445430058	Police Officer/Police Trainee	1.00
POL445430057	Police Officer/Police Trainee	1.00
POL445430056	Police Officer/Police Trainee	1.00
POL445430055	Police Officer/Police Trainee	1.00
POL445430054	Police Officer/Police Trainee	1.00
POL445430053	Police Officer/Police Trainee	1.00
POL445430052	Police Officer/Police Trainee	1.00
POL445430051	Police Officer/Police Trainee	1.00
POL445430050	Police Officer/Police Trainee	1.00
POL445430049	Police Officer/Police Trainee	1.00
POL445430048	Police Officer/Police Trainee	1.00
POL445430047	Police Officer/Police Trainee	1.00
POL445430046	Police Officer/Police Trainee	1.00
POL445430045	Police Officer/Police Trainee	1.00
POL445430044	Police Officer/Police Trainee	1.00
POL445430043	Police Officer/Police Trainee	1.00
POL445430042	Police Officer/Police Trainee	1.00
POL445430041	Police Officer/Police Trainee	1.00
POL445430040	Police Officer/Police Trainee	1.00
POL445430039	Police Officer/Police Trainee	1.00
POL445430038	Police Officer/Police Trainee	1.00
POL445430037	Police Officer/Police Trainee	1.00
POL445430036	Police Officer/Police Trainee	1.00
POL445430035	Police Officer/Police Trainee	1.00
POL445430034	Police Officer/Police Trainee	1.00
POL445430033	Police Officer/Police Trainee	1.00
POL445430032	Police Officer/Police Trainee	1.00
POL445430031	Police Officer/Police Trainee	1.00
POL445430030	Police Officer/Police Trainee	1.00
POL445430029	Police Officer/Police Trainee	1.00
POL445430028	Police Officer/Police Trainee	1.00
POL445430027	Police Officer/Police Trainee	1.00
POL445430026	Police Officer/Police Trainee	1.00
POL445430025	Police Officer/Police Trainee	1.00
POL445430024	Police Officer/Police Trainee	1.00
POL445430023	Police Officer/Police Trainee	1.00
POL445430022	Police Officer/Police Trainee	1.00
POL445430021	Police Officer/Police Trainee	1.00
POL445430020	Police Officer/Police Trainee	1.00
POL445430019	Police Officer/Police Trainee	1.00
POL445430018	Police Officer/Police Trainee	1.00
POL445430017	Police Officer/Police Trainee	1.00
POL445430016	Police Officer/Police Trainee	1.00

POL445430015	Police Officer/Police Trainee	1.00
POL445430014	Police Officer/Police Trainee	1.00
POL445430013	Police Officer/Police Trainee	1.00
POL445430012	Police Officer/Police Trainee	1.00
POL445430011	Police Officer/Police Trainee	1.00
POL445430010	Police Officer/Police Trainee	1.00
POL445430009	Police Officer/Police Trainee	1.00
POL445430008	Police Officer/Police Trainee	1.00
POL445430007	Police Officer/Police Trainee	1.00
POL445430006	Police Officer/Police Trainee	1.00
POL445430005	Police Officer/Police Trainee	1.00
POL445430004	Police Officer/Police Trainee	1.00
POL445430003	Police Officer/Police Trainee	1.00
POL445430002	Police Officer/Police Trainee	1.00
POL445430001	Police Officer/Police Trainee	1.00
POL445429001	Police Property and Evidence Supervisor	1.00
POL441094004	Police Property and Evidence Technician I/II	1.00
POL441094003	Police Property and Evidence Technician I/II	1.00
POL441094002	Police Property and Evidence Technician I/II	1.00
POL441094001	Police Property and Evidence Technician I/II	1.00
POL445440010	Police Records Clerk I/II	1.00
POL445440009	Police Records Clerk I/II	1.00
POL445440008	Police Records Clerk I/II	1.00
POL445440007	Police Records Clerk I/II	1.00
POL445440005	Police Records Clerk I/II	1.00
POL445440004	Police Records Clerk I/II	1.00
POL445440003	Police Records Clerk I/II	1.00
POL445440002	Police Records Clerk I/II	1.00
POL445440001	Police Records Clerk I/II	1.00
POL445494004	Police Scene Technician I/II	1.00
POL445494003	Police Scene Technician I/II	1.00
POL445494002	Police Scene Technician I/II	1.00
POL445494001	Police Scene Technician I/II	1.00
POL445470017	Police Sergeant	1.00
POL445470016	Police Sergeant	1.00
POL445470015	Police Sergeant	1.00
POL445470014	Police Sergeant	1.00
POL445470013	Police Sergeant	1.00
POL445470012	Police Sergeant	1.00
POL445470011	Police Sergeant	1.00
POL445470010	Police Sergeant	1.00
POL445470009	Police Sergeant	1.00
POL445470008	Police Sergeant	1.00
POL445470007	Police Sergeant	1.00
POL445470006	Police Sergeant	1.00
POL445470005	Police Sergeant	1.00
POL445470004	Police Sergeant	1.00

POL445470003	Police Sergeant	1.00
POL445470002	Police Sergeant	1.00
POL445470001	Police Sergeant	1.00
POL445489002	Police Services Administrator	1.00
POL445489001	Police Services Administrator	1.00
POL441138001	Police Social Services Practitioner I	1.00
POL441126001	Police Social Services Supervisor	1.00
POL445657001	Public Safety Program Coordinator	1.00
POL445748002	Records Supervisor	1.00
POL445748001	Records Supervisor	1.00
POL441092003	Senior Police Records Clerk	1.00
POL441092002	Senior Police Records Clerk	1.00
POL441092001	Senior Police Records Clerk	1.00

Total for Department:	**POL Police Department**	227.00

Position Code	Position Title	Allocated FTE
PRL580071001	Administrative Assistant	1.00
PRL580084008	Administrative Technician	1.00
PRL580084007	Administrative Technician	1.00
PRL580084006	Administrative Technician	1.00
PRL580084005	Administrative Technician	1.00
PRL580084004	Administrative Technician	1.00
PRL580084003	Administrative Technician	1.00
PRL580084002	Administrative Technician	1.00
PRL580084001	Administrative Technician	1.00
PRL588302002	Aquatics Maintenance Technician	1.00
PRL588302001	Aquatics Maintenance Technician	1.00
PRL588300001	Arborist Technician	1.00
PRL581225014	Child Care Site Coordinator	1.00
PRL581225013	Child Care Site Coordinator	1.00
PRL581225012	Child Care Site Coordinator	1.00
PRL581225011	Child Care Site Coordinator	1.00
PRL581225010	Child Care Site Coordinator	1.00
PRL581225009	Child Care Site Coordinator	1.00
PRL581225008	Child Care Site Coordinator	1.00
PRL581225007	Child Care Site Coordinator	1.00
PRL581225006	Child Care Site Coordinator	1.00
PRL581225005	Child Care Site Coordinator	1.00
PRL581225004	Child Care Site Coordinator	1.00
PRL581225003	Child Care Site Coordinator	1.00
PRL581225002	Child Care Site Coordinator	1.00
PRL581225001	Child Care Site Coordinator	1.00
PRL581142001	City Librarian	1.00
PRL583740001	Cultural Arts Supervisor	1.00
PRL581645002	Department Public Information Officer	1.00

PRL581101001	Graphic Designer	1.00
PRL585075002	Irrigation Technician	1.00
PRL584152007	Librarian I/II	0.50
PRL584152005	Librarian I/II	1.00
PRL584152004	Librarian I/II	1.00
PRL584152003	Librarian I/II	1.00
PRL584152002	Librarian I/II	1.00
PRL584152001	Librarian I/II	1.00
PRL584210005	Library Assistant I/II	1.00
PRL584210003	Library Assistant I/II	1.00
PRL584210002	Library Assistant I/II	1.00
PRL584210001	Library Assistant I/II	1.00
PRL589544009	Library Supervisor	1.00
PRL589544005	Library Supervisor	1.00
PRL589544001	Library Supervisor	1.00
PRL584250003	Library Technician	1.00
PRL584250002	Library Technician	1.00
PRL584250001	Library Technician	1.00
PRL580050003	Management Analyst I/II	1.00
PRL580050002	Management Analyst I/II	1.00
PRL580050001	Management Analyst I/II	1.00
PRL584517002	Marketing and Communication Analyst I/II	1.00
PRL584517001	Marketing and Communication Analyst I/II	1.00
PRL581121001	Museum Assistant	1.00
PRL589545001	Natural Resources Specialist I/II	1.00
PRL584872003	Natural Resources Worker I/II	1.00
PRL584872002	Natural Resources Worker I/II	1.00
PRL584872001	Natural Resources Worker I/II	1.00
PRL584872006	Natural Resources Worker I/II	1.00
PRL584872005	Natural Resources Worker I/II	1.00
PRL584872004	Natural Resources Worker I/II	1.00
PRL584957009	Office Assistant I/II	1.00
PRL584957006	Office Assistant I/II	1.00
PRL584957003	Office Assistant I/II	1.00
PRL584957002	Office Assistant I/II	1.00
PRL585022002	Park Development Project Manager I/II	1.00
PRL585022001	Park Development Project Manager I/II	1.00
PRL581106001	Park Planning and Development Manager	1.00
PRL589546003	Parks and Open Space Superintendent	1.00
PRL589546001	Parks and Open Space Superintendent	1.00
PRL585069004	Parks and Open Space Supervisor	1.00
PRL585069003	Parks and Open Space Supervisor	1.00
PRL585069002	Parks and Open Space Supervisor	1.00
PRL585069001	Parks and Open Space Supervisor	1.00
PRL585080030	Parks Maintenance Worker I/II	1.00
PRL585080029	Parks Maintenance Worker I/II	1.00
PRL585080028	Parks Maintenance Worker I/II	1.00

PRL585080027	Parks Maintenance Worker I/II	1.00
PRL585080026	Parks Maintenance Worker I/II	1.00
PRL585080025	Parks Maintenance Worker I/II	1.00
PRL585080024	Parks Maintenance Worker I/II	1.00
PRL585080023	Parks Maintenance Worker I/II	1.00
PRL585080022	Parks Maintenance Worker I/II	1.00
PRL585080021	Parks Maintenance Worker I/II	1.00
PRL585080020	Parks Maintenance Worker I/II	1.00
PRL585080019	Parks Maintenance Worker I/II	1.00
PRL585080018	Parks Maintenance Worker I/II	1.00
PRL585080017	Parks Maintenance Worker I/II	1.00
PRL585080016	Parks Maintenance Worker I/II	1.00
PRL585080015	Parks Maintenance Worker I/II	1.00
PRL585080014	Parks Maintenance Worker I/II	1.00
PRL585080013	Parks Maintenance Worker I/II	1.00
PRL585080012	Parks Maintenance Worker I/II	1.00
PRL585080011	Parks Maintenance Worker I/II	1.00
PRL585080010	Parks Maintenance Worker I/II	1.00
PRL585080009	Parks Maintenance Worker I/II	1.00
PRL585080008	Parks Maintenance Worker I/II	1.00
PRL585080007	Parks Maintenance Worker I/II	1.00
PRL585080006	Parks Maintenance Worker I/II	1.00
PRL585080005	Parks Maintenance Worker I/II	1.00
PRL585080004	Parks Maintenance Worker I/II	1.00
PRL585080003	Parks Maintenance Worker I/II	1.00
PRL585080002	Parks Maintenance Worker I/II	1.00
PRL585080001	Parks Maintenance Worker I/II	1.00
PRL581278006	Parks Project Technician	1.00
PRL581278005	Parks Project Technician	1.00
PRL581278004	Parks Project Technician	1.00
PRL581278003	Parks Project Technician	1.00
PRL581278002	Parks Project Technician	1.00
PRL581278001	Parks Project Technician	1.00
PRL585082001	Parks Recreation and Libraries Director	1.00
PRL589547004	Parks Recreation and Libraries Manager	1.00
PRL589547003	Parks Recreation and Libraries Manager	1.00
PRL589547002	Parks Recreation and Libraries Manager	1.00
PRL589543011	Recreation Coordinator I/II	1.00
PRL589543010	Recreation Coordinator I/II	1.00
PRL589543009	Recreation Coordinator I/II	1.00
PRL589543007	Recreation Coordinator I/II	1.00
PRL589543006	Recreation Coordinator I/II	1.00
PRL589543004	Recreation Coordinator I/II	1.00
PRL589543003	Recreation Coordinator I/II	1.00
PRL589543002	Recreation Coordinator I/II	1.00
PRL589543001	Recreation Coordinator I/II	1.00
PRL589543008	Recreation Coordinator I/II	1.00

PRL588304005	Recreation Leader	1.00
PRL588304004	Recreation Leader	1.00
PRL588304003	Recreation Leader	1.00
PRL588304002	Recreation Leader	1.00
PRL588304001	Recreation Leader	1.00
PRL581143005	Recreation Superintendent	1.00
PRL581143004	Recreation Superintendent	1.00
PRL581143002	Recreation Superintendent	1.00
PRL581144008	Recreation Supervisor	1.00
PRL581144007	Recreation Supervisor	1.00
PRL581144006	Recreation Supervisor	1.00
PRL581144004	Recreation Supervisor	1.00
PRL581144003	Recreation Supervisor	1.00
PRL581144002	Recreation Supervisor	1.00
PRL581144001	Recreation Supervisor	1.00
PRL583733001	Senior Interpretive Services Specialist	1.00
PRL587154001	Senior Natural Resources Worker	1.00
PRL581119001	Senior Park Development Project Manager	1.00
PRL587192006	Senior Parks Maintenance Worker	1.00
PRL587192005	Senior Parks Maintenance Worker	1.00
PRL587192004	Senior Parks Maintenance Worker	1.00
PRL587192003	Senior Parks Maintenance Worker	1.00
PRL587192002	Senior Parks Maintenance Worker	1.00
PRL587201001	Senior Tree Trimmer	1.00
PRL581504002	Tree Trimmer I/II	1.00
PRL581504001	Tree Trimmer I/II	1.00
PRL581107001	Turf and Sports Field Technician	1.00
PRL588762001	Urban Forester	1.00
PRL581641004	Youth Development Program Coordinator	1.00
PRL581641003	Youth Development Program Coordinator	1.00
PRL581641001	Youth Development Program Coordinator	1.00
Total for Department:	**PRL Parks Recreation and Libraries**	153.50

Position Code	Position Title	Allocated FTE
PWD620088001	Associate/Assistant Transportation Planner	1.00
PWD620071001	Administrative Assistant	1.00
PWD620084006	Administrative Technician	0.75
PWD620084005	Administrative Technician	1.00
PWD620084004	Administrative Technician	1.00
PWD620084003	Administrative Technician	1.00
PWD620084002	Administrative Technician	1.00
PWD620084001	Administrative Technician	1.00
PWD620090001	Alternative Transportation Manager	1.00
PWD621148001	Assistant Public Works Director	1.00
PWD621005012	Associate (PE)/Assistant/Junior Engineer	1.00

PWD621005011	Associate (PE)/Assistant/Junior Engineer	1.00
PWD621005010	Associate (PE)/Assistant/Junior Engineer	1.00
PWD621005009	Associate (PE)/Assistant/Junior Engineer	1.00
PWD621005008	Associate (PE)/Assistant/Junior Engineer	1.00
PWD621005007	Associate (PE)/Assistant/Junior Engineer	1.00
PWD621005006	Associate (PE)/Assistant/Junior Engineer	1.00
PWD621005005	Associate (PE)/Assistant/Junior Engineer	1.00
PWD621005004	Associate (PE)/Assistant/Junior Engineer	1.00
PWD621005003	Associate (PE)/Assistant/Junior Engineer	1.00
PWD621005002	Associate (PE)/Assistant/Junior Engineer	1.00
PWD621005001	Associate (PE)/Assistant/Junior Engineer	1.00
PWD620088003	Associate/Assistant Transportation Planner	1.00
PWD621032006	Building Maintenance Worker I/II	1.00
PWD621032005	Building Maintenance Worker I/II	1.00
PWD621032004	Building Maintenance Worker I/II	1.00
PWD621032003	Building Maintenance Worker I/II	1.00
PWD621032002	Building Maintenance Worker I/II	1.00
PWD621032001	Building Maintenance Worker I/II	1.00
PWD621401001	Community Relations Analyst	1.00
PWD621485006	Custodian	1.00
PWD621485005	Custodian	1.00
PWD621485004	Custodian	1.00
PWD621485003	Custodian	1.00
PWD621485002	Custodian	1.00
PWD621485001	Custodian	1.00
PWD621025001	Custodian Supervisor	1.00
PWD622385005	Electronics Technician I/II/III	1.00
PWD622385004	Electronics Technician I/II/III	1.00
PWD622385003	Electronics Technician I/II/III	1.00
PWD622385002	Electronics Technician I/II/III	1.00
PWD622385001	Electronics Technician I/II/III	1.00
PWD621350001	Engineering Technician I/II	1.00
PWD621300002	Engineering Technician I/II	1.00
PWD622560005	Equipment Serviceworker	1.00
PWD622560004	Equipment Serviceworker	1.00
PWD622560003	Equipment Serviceworker	1.00
PWD622560002	Equipment Serviceworker	1.00
PWD622560001	Equipment Serviceworker	1.00
PWD624321001	Facilities Supervisor	1.00
PWD623319001	Fleet Management Technician	1.00
PWD621113001	Fleet Services Parts Buyer	1.00
PWD622565001	Fleet Services Supervisor	1.00
PWD622214001	GIS Technician I/II	1.00
PWD621140001	Intelligent Transportation Systems Maintenance Supervisor	1.00
PWD628952001	Inventory Supply and Control Worker I/II	1.00
PWD620050002	Management Analyst I/II	1.00

PWD620050001	Management Analyst I/II	1.00
PWD624501010	Mechanic I/II	1.00
PWD624501009	Mechanic I/II	1.00
PWD624501008	Mechanic I/II	1.00
PWD624501007	Mechanic I/II	1.00
PWD624501006	Mechanic I/II	1.00
PWD624501005	Mechanic I/II	1.00
PWD624501004	Mechanic I/II	1.00
PWD624501003	Mechanic I/II	1.00
PWD624501002	Mechanic I/II	1.00
PWD624501001	Mechanic I/II	1.00
PWD624957008	Office Assistant I/II	1.00
PWD624957007	Office Assistant I/II	0.50
PWD624957006	Office Assistant I/II	1.00
PWD624957005	Office Assistant I/II	1.00
PWD624957003	Office Assistant I/II	1.00
PWD624957002	Office Assistant I/II	1.00
PWD624957001	Office Assistant I/II	1.00
PWD625514001	Principal Engineer	1.00
PWD625560003	Project Coordinator	1.00
PWD625560002	Project Coordinator	1.00
PWD625560001	Project Coordinator	1.00
PWD621069001	Project Supervisor	1.00
PWD625635001	Public Works Director	1.00
PWD621087002	Public Works Manager	1.00
PWD621087001	Public Works Manager	1.00
PWD627119001	Senior Building Maintenance Worker	1.00
PWD627144001	Senior Custodian	1.00
PWD627170001	Senior Electronic Technician	1.00
PWD627142003	Senior Engineer	1.00
PWD627142002	Senior Engineer	1.00
PWD627142001	Senior Engineer	1.00
PWD627189002	Senior Mechanic	1.00
PWD627189001	Senior Mechanic	1.00
PWD627187006	Senior Street Maintenance Worker	1.00
PWD627187005	Senior Street Maintenance Worker	1.00
PWD627187004	Senior Street Maintenance Worker	1.00
PWD627187003	Senior Street Maintenance Worker	1.00
PWD627187002	Senior Street Maintenance Worker	1.00
PWD627187001	Senior Street Maintenance Worker	1.00
PWD621073001	Street Maintenance Manager	1.00
PWD627522003	Street Maintenance Supervisor	1.00
PWD627522002	Street Maintenance Supervisor	1.00
PWD627522001	Street Maintenance Supervisor	1.00
PWD627530020	Street Maintenance Worker I/II	1.00
PWD627530019	Street Maintenance Worker I/II	1.00
PWD627530018	Street Maintenance Worker I/II	1.00

PWD627530017	Street Maintenance Worker I/II	1.00
PWD627530016	Street Maintenance Worker I/II	1.00
PWD627530015	Street Maintenance Worker I/II	1.00
PWD627530014	Street Maintenance Worker I/II	1.00
PWD627530013	Street Maintenance Worker I/II	1.00
PWD627530012	Street Maintenance Worker I/II	1.00
PWD627530011	Street Maintenance Worker I/II	1.00
PWD627530010	Street Maintenance Worker I/II	1.00
PWD627530009	Street Maintenance Worker I/II	1.00
PWD627530008	Street Maintenance Worker I/II	1.00
PWD627530007	Street Maintenance Worker I/II	1.00
PWD627530006	Street Maintenance Worker I/II	1.00
PWD627530005	Street Maintenance Worker I/II	1.00
PWD627530004	Street Maintenance Worker I/II	1.00
PWD627530003	Street Maintenance Worker I/II	1.00
PWD627530002	Street Maintenance Worker I/II	1.00
PWD627530001	Street Maintenance Worker I/II	1.00
PWD627540005	Street Sweeper Operator	1.00
PWD627540004	Street Sweeper Operator	1.00
PWD627540003	Street Sweeper Operator	1.00
PWD627540002	Street Sweeper Operator	1.00
PWD627540001	Street Sweeper Operator	1.00
PWD622376002	Traffic Signal Maintenance Worker I/II	1.00
PWD622376001	Traffic Signal Maintenance Worker I/II	1.00
PWD621110001	Transit Operations Supervisor	1.00
PWD621052001	Transportation Grants Analyst	1.00
PWD621111001	Transportation Technician I/II	1.00
PWD628940001	Vehicle Maintenance Servicewriter	1.00
Total for Department:	**PWD Public Works**	132.25

Total for All Departments	**Allocated FTE**
	1,387.10

Report : Position Allocation by Department , No Names

COUNCIL COMMUNICATION

CC #: 3502
File #: 0709-03 & 0201-01

Title:	Sierra Vista Parcel Acquisition Project - Community Development Block Grant Loan Agreement and Budget Adjustment
Contact:	Kristine Faelz 916-774-5451 kpfaelz@roseville.ca.us Claudia Carreno 916-774-5476 ccarreno@roseville.ca.us

Meeting Date: 8/21/2024
Item #: 7.22.

RECOMMENDATION TO COUNCIL

Staff requests that the City Council:

1) Adopt a resolution approving a loan agreement between the City and Greek Orthodox Housing Corporation, funded by the Community Development Block Grant, to fund the Sierra Vista Parcel Acquisition Project for affordable housing development and authorizing the City Manager to execute necessary documents on behalf of the City of Roseville; and
2) Adopt an ordinance authorizing a budget adjustment to increase the Grants Deferred Loans expenditure budget by $571,850 in the Community Development Block Grant Fund.

BACKGROUND

As an entitlement jurisdiction, the City of Roseville receives an annual allocation of Community Development Block Grant (CDBG) funds from the U.S. Department of Housing and Urban Development (HUD) to promote affordable housing and community development programs for low-income residents. Each year, the City must produce an Annual Action Plan outlining how CDBG funds will be used to address the goals of the five year Consolidated Plan. On May 3, 2023, Council approved the Annual Action Plan for the 2023/24 program year, which included a proposed project to allocate $412,987 toward affordable rental housing development to benefit low-income households and individuals.

In August of 2023, staff released a Notification of Funding Availability (NOFA) in pursuit of a qualified affordable housing developer or project sponsor to award funds to be used for proposed affordable housing development, requesting interested parties to submit proposals for planned projects. The amount of financial assistance allocated to eligible acquisitions under the NOFA was a minimum of $412,987 and up to a maximum of $598,000. No proposals were received in response to the NOFA. In September 2023, staff re-released the NOFA, providing an extended deadline for submissions and two proposals were submitted. Both applications received were deemed incomplete due to lack of sufficient information to determine an award. The NOFA was

re-opened for a third time in December 2023. A single application was received from the non-profit organization Greek Orthodox Housing Corporation (GOHC), requesting assistance with acquiring vacant land known as Sierra Vista parcel JM-30, located at 4950 Upland Drive, Roseville (Sierra Vista Parcel Acquisition Project). The project site is already designated for affordable housing in the Sierra Vista Specific Plan.

The developer anticipates acquiring the land by late summer 2024 for development of the Sierra Vista Apartments. The proposed Sierra Vista Apartments is a 176-unit rental project, with a mix of 50 one-bedroom units (approximately 615 SF), 81 two-bedroom units (approximately 840 SF), and 45 three-bedroom units (approximately 1,060 SF). The Sierra Vista Apartments is expected to be completed by 2026 and will be 100% affordable and provide housing for families earning up to 80% of the area median income (AMI) for Placer County. The purchase price for the acquisition of Sierra Vista parcel JM-30 will total $2,000,000 in addition to closing costs. The GOHC's request to the City is for a $571,850 loan to be used toward the purchase costs. The loan will be funded with CDBG funds from 2023, along with carryover funds from prior year (2020, 2021, and 2022) grants. The GOHC will provide the remaining funds necessary for the Sierra Vista Parcel Acquisition Project.

Staff is requesting approval of the loan agreement and the attached budget adjustment, as well as authority to finalize and sign the Promissory Note, Deed of Trust, and any other documents necessary to fund and issue a CDBG loan to the GOHC for the Sierra Vista Parcel Acquisition Project. A Regulatory Agreement will be required to establish 176 units for lower-income households and restrict the occupancy, operation, ownership, and management of the project. Once finalized, staff will bring forward the necessary Regulatory Agreement for Council review and consideration. The recommended agreement before Council will continue to support the City's Regional Housing Needs Assessment (RHNA) goals and General Plan.

FISCAL IMPACT

CDBG funding is provided as a federal grant to the City. These grants are used to offset potential costs to the General Fund and to serve the low-income community. The recommended budget adjustment will increase the Grants Deferred Loans expenditure budget in the Community Development Block Grant Fund by $571,850 to fund the Sierra Vista Parcel Acquisition Project for affordable housing development. This item does not impact the City's General Fund.

ENVIRONMENTAL REVIEW

Development of the Sierra Vista Apartments was previously evaluated in the Sierra Vista Specific Plan EIR (certified May 5, 2010 and SCH# 2008032115), and identified in the associated Sierra Vista Specific Plan. Construction of the Sierra Vista Apartments is found to be within the scope of the project covered by the Sierra Vista Specific Plan Final EIR, and is therefore exempt from CEQA pursuant to Section 15182. As discussed in the Specific Plan EIR, the EIR provides environmental analyses of community infrastructure and facilities, including residential subdivisions. Because the project is consistent with the Sierra Vista Specific Plan Final EIR and Specific Plan, no new effects would be expected to occur and all applicable mitigation measures from the Sierra Vista Specific Plan EIR will be implemented during the design and construction of the Sierra Vista Apartments. Because the proposed project meets the requirements identified in the State CEQA Guidelines Section 15183, no additional CEQA review is required.

Staff has also completed the necessary National Environmental Protection Act (NEPA) review, as implemented by the Department of Housing and Urban Development (HUD) for the use of CDBG funds at 24 CFR Part 58. As a result of the NEPA review, staff has concluded a finding of no significant impact, as the project will not result in a significant impact on the quality of the human environment.

CITY COUNCIL STRATEGIC PLAN/OVERARCHING GOALS

Goal C - Maintain a safe and healthy community

Respectfully Submitted,

Kristine Faelz, Housing Analyst

Melissa Anguiano, Economic Development Director

_____

Dominick Casey, City Manager

ATTACHMENTS:

Description

Resolution 24-300

Loan Agreement

Ordinance 6853

RESOLUTION NO. 24-300

APPROVING A LOAN AGREEMENT, BY AND BETWEEN THE CITY OF ROSEVILLE AND GREEK ORTHODOX HOUSING CORPORATION, AND AUTHORIZING THE CITY MANAGER TO EXECUTE IT, THE PROMISSORY NOTE, DEED OF TRUST AND ANY DOCUMENTS NECESSARY TO FUND AND ISSUE THE COMMUNITY DEVELOPMENT BLOCK GRANT LOAN, ON BEHALF OF THE CITY OF ROSEVILLE

WHEREAS, as an entitlement jurisdiction, the City of Roseville receives an annual allocation of Community Development Block Grant (CDBG) funds from the U.S. Department of Housing and Urban Development to promote affordable housing and community development programs for low-income residents; and

WHEREAS, in August of 2023, staff released a Notification of Funding Availability (NOFA) in pursuit of a qualified affordable housing developer or project sponsor to award funds to be used for proposed affordable housing development, requesting interested parties to submit proposals for planned projects; and

WHEREAS, a single application was received from the non-profit organization Greek Orthodox Housing Corporation (GOHC), requesting assistance with acquiring vacant land known as Sierra Vista parcel JM-30, located at 4950 Upland Drive, Roseville (Sierra Vista Parcel Acquisition Project); and

WHEREAS, the proposed Sierra Vista Apartments is a 176-unit rental project and is expected to be completed by 2026; and

WHEREAS, staff is requesting approval of a loan agreement with Greek Orthodox Housing Corporation, as well as the associated Promissory Note, Deed of Trust, and any other documents necessary to fund and issue a CDBG loan to the GOHC for the Sierra Vista Parcel Acquisition project; and

WHEREAS, the Loan Agreement for Greek Orthodox Housing Corporation located at 4950 Upland Drive, Roseville, CA, has been reviewed by the City Council; and

NOW, THEREFORE, BE IT RESOLVED by the Council of the City of Roseville that the Loan Agreement with Greek Orthodox Housing Corporation is hereby approved and the City Manager is authorized to execute it as well as the associated Promissory Note, Deed of Trust and other documents necessary to fund and issue a CDBG loan, on behalf of the City of Roseville.

PASSED AND ADOPTED by the Council of the City of Roseville this____day of _____, 20_, by the following vote on roll call:

AYES COUNCILMEMBERS:

NOES COUNCILMEMBERS:

ABSENT COUNCILMEMBERS:

_____
MAYOR

ATTEST:

_____
City Clerk

LOAN AGREEMENT FOR 4950 UPLAND DRIVE PROPERTY ACQUISITION

(COMMUNITY DEVELOPMENT BLOCK GRANT)

THIS AGREEMENT is made and entered into this ___ day of _____, 20__, by and between the City of Roseville, a municipal corporation ("CITY") and Greek Orthodox Housing Corporation, a California nonprofit corporation ("SUBRECIPIENT").

W I T N E S S E T H:

WHEREAS, SUBRECIPIENT is a nonprofit corporation organized under the laws of the State of California and qualifying for federal tax exempt status; and

WHEREAS, CITY has allocated Community Development Block Grant (CDBG) funds for SUBRECIPIENT's acquisition of vacant land located at 4950 Upland Drive (the "Property"); and

NOW, THEREFORE, the parties agree as follows:

1. Loan. CITY hereby agrees to loan CDBG funds to SUBRECIPIENT in an amount not to exceed five hundred seventy-one thousand eight hundred fifty dollars ($571,850.00) (the "Loan"). The amount of the Loan will be determined during the escrow process and made on the terms set forth in this Agreement and in the Promissory Note and Deed of Trust, copies of which are attached hereto as Exhibits "A" and "B," respectively. Subsequent to the execution of this Agreement, the parties agree to execute the Promissory Note and Deed of Trust in substantially the same forms as Exhibits "A" and "B," respectively.

2. Term. The term of this Agreement shall commence upon disbursement of the loan funds (Commencement Date) and shall terminate on the fifty fifth (55th) anniversary of the Commencement Date, if not terminated earlier by reason of default or repayment of the loan.

3. Regulatory Agreement. In consideration for the Loan, SUBRECIPIENT agrees to execute a Regulatory Agreement substantially in the form of that attached hereto as Exhibit "C," and consents to the recordation of the Regulatory Agreement against the Property. The Regulatory Agreement shall be executed and recorded in concurrence with the Loan.

4. Use of Funds. Use of funds allocated hereunder to SUBRECIPIENT shall be subject to the following express terms and conditions:

A. SUBRECIPIENT shall use all funds provided pursuant to this Agreement exclusively for purchase money financing for acquisition of the real property located at 4950 Upland Drive.

B. SUBRECIPIENT shall continue to use the facility at 4950 Upland Drive to render services only to recipients meeting appropriate income eligibility criteria as provided in the Regulatory Agreement.

C. No funds paid by CITY hereunder shall be used directly or indirectly by SUBRECIPIENT for any lobbying or political activity whatsoever.

D. SUBRECIPIENT shall use all moneys received pursuant to this Agreement in conformity with the applicable provisions of 24 CFR Part 570, issued by the United States Department of Housing and Urban Development (HUD) (Administrative Regulations for Community Block Grants).

E. SUBRECIPIENT shall use all moneys received pursuant to this Agreement to meet one of the national objectives identified in 24 CFR Section 570.208 for so long as the Regulatory Agreement is in effect.

6. Funds to be Expended During Current Fiscal Year. The loan shall be funded only from the Community Development Block Grant fund during the current fiscal year. All funds borrowed by SUBRECIPIENT under this Agreement shall be disbursed directly into escrow and spent prior to the end of the current fiscal year. All funds not spent within the current fiscal year shall be returned to CITY within thirty (30) days after the conclusion of the current fiscal year.

No other funds of CITY, including without limitation its general fund, shall be liable for any payment under this Loan Agreement, nor is the taxing power of CITY pledged in any manner.

7. SUBRECIPIENT as Independent Entity. SUBRECIPIENT and the agents or employees of SUBRECIPIENT shall act in an independent capacity and not as officers, employees or agents of CITY in performance of this Loan Agreement.

8. Termination:

A. Prior to disbursement of the loan funds, either party shall have the right to terminate this Agreement upon thirty (30) days written notice thereof being served on the other party.

B. In the event that CITY receives communication from the federal government prior to disbursement of the loan funds that funds available to CITY under the Community Development Block Grant Program are to be reduced or withdrawn by the federal government, CITY may at its option terminate this Agreement immediately and Subrecipient shall be released from any obligations under or associated with this Agreement.

C. Subject to the terms and conditions contained in the Deed of Trust, Promissory Note and Regulatory Agreement, if, through any cause, SUBRECIPIENT shall fail to fulfill in a timely and proper manner its obligations under this Agreement, or if SUBRECIPIENT shall violate any of the covenants, requirements or stipulations of this Agreement, CITY shall thereupon have the right to terminate this Agreement by giving at least five (5) days written notice to SUBRECIPIENT of such termination, specifying the effective date of such termination. Notwithstanding the above, SUBRECIPIENT shall not be relieved of liability to CITY for damages sustained by CITY or others by virtue of any breach of this Agreement by SUBRECIPIENT.

D. Borrower may prepay the Loan at any time prior to the expiration of the term of the Regulatory Agreement.

9. No Assignment. This Agreement is not assignable by SUBRECIPIENT either in whole or part, without the express written authorization of City.

10. Time is of the Essence. Time is of the essence of this Agreement.

11. All Terms to be in Writing. No alteration or variation of the terms of this Agreement shall be valid unless made in writing and signed by the parties hereto, and no oral understanding or agreement not incorporated herein shall be binding on either of the parties hereto.

12. Records:

A. SUBRECIPIENT shall maintain all necessary books and records, including property, personnel and financial records, in accordance with requirements prescribed by HUD or CITY with respect to all matters covered by this Agreement. Except as otherwise

authorized by HUD, such records shall be maintained for a period of three (3) years after receipt of the final payment under this Agreement.

B. Upon request for examination by CITY, SUBRECIPIENT shall, at any time during normal business hours, make available all of its records with respect to all matters covered by this Agreement. SUBRECIPIENT shall permit CITY to audit, examine and make excerpts or transcripts from these records.

13. Conflict of Interest: No member, officer, or employee of SUBRECIPIENT or its designees or agents, who exercises any function or responsibility with respect to the program during his or her tenure, or for one (1) year thereafter, shall have any interest, direct or indirect, in any contract or subcontract, or the proceeds thereof, for activities performed in connection with the program assisted under this Agreement. SUBRECIPIENT shall incorporate, or cause to be incorporated, in all subcontracts a provision prohibiting such interest pursuant to the purposes of this Section.

14. Compliance with Governmental Regulations: SUBRECIPIENT shall, at its sole cost and expense, comply with all applicable municipal, county, state and federal requirements now in force, or which may hereafter be in force pertaining to any and all activities contemplated under this Agreement. Notwithstanding the foregoing, nothing contained in this Agreement, or any other documents associated with the Loan shall be interpreted to require Subrecipient to comply with the Build America, Buy America Act (41 U.S. Code Chapter 83) or similar or related rules, regulations or orders, including, without limitation 2 CFR 184 and Presidential Executive Order 14005.

SUBRECIPIENT shall comply with any applicable provisions of 24 CFR 570, which is available for review in the CITY Economic and Community Services Office.

15. Fair Employment. SUBRECIPIENT shall comply with the provisions of the Fair Employment and Housing Act (Government Code §12900, et seq.), the regulations promulgated thereunder (2 CCR §7285.0, et seq.), the provisions of Article 9.5, Chapter 1, Part 1, Division 3, Title 2 of the Government Code (§§11135-11139.5) and the regulations or standards adopted by the State of California to implement such article.

SUBRECIPIENT shall give advice of its obligation under this Grant Agreement to labor organizations or contractors with which it has collective bargaining or other agreements. SUBRECIPIENT shall include nondiscrimination compliance provisions similar to those of this Agreement in all subcontracts to perform work under this Agreement.

16. Discrimination Prohibited: SUBRECIPIENT shall not employ discriminatory practices in the provision of services, employment of personnel, or in any other respect on the basis of race, color, religion, sex, national origin, ancestry, age, or physical or mental disability, as more specifically set forth in Sections 570.602 and 570.601 of the aforesaid HUD Regulations. During the performance of this Agreement SUBRECIPIENT agrees as follows:

A. No person in the United States shall, on the grounds of race, color, religion, national origin, sex, age or disability, be excluded from participation in, be denied the benefits of, or be subject to discrimination under any program or activity made possible by or resulting from this Agreement.

B. SUBRECIPIENT will not discriminate against any employee or applicant for employment because of race, color, religion, sex, national origin, ancestry, age or physical or mental disability. SUBRECIPIENT shall take affirmative action to ensure that applicants are employed, and that employees are treated during employment, without regard to their race, color, religion, sex, national origin, ancestry, age or physical or mental disability. Such action shall

include, but not be limited to the following: employment, upgrading, demotion, or transfer; recruitment or recruitment advertising; layoff or termination; rates of pay or other forms of compensation; and selection for training, including apprenticeship. SUBRECIPIENT agrees to post in conspicuous places, available to employees and applicants for employment, notices setting forth the provisions of this nondiscrimination clause:

C. SUBRECIPIENT will in all solicitations or advertisements for employees placed by or on behalf of SUBRECIPIENT, state that all qualified applicants will receive consideration for employment without regard to race, color, religion, sex, national origin, ancestry, age or physical or mental disability.

17. OMB Circulars:

A. This Agreement is subject to the requirements of the Office of Management and Budget, Circular A-122, "Cost Principles for Nonprofit Organizations," a copy of which is available for review in CITY's Housing Division Office.

B. This Agreement is subject to the requirements of the Office of Management and Budget, Circular A-110, "Grants and Agreements with Institutions," a copy of which is available for review in CITY's Housing Division Office.

18. Property Ownership and Procurement: A. In the event this Agreement is not fully performed to the satisfaction of CITY, any and all non-expendable furnishings, equipment or other personal property purchased pursuant to this Agreement and having a useful life or more than one (1) year and a purchase price of three hundred ($300) dollars or more and not consumed in the performance of this Agreement shall become the property of CITY. Such property shall be delivered to CITY upon written notification by CITY to SUBRECIPIENT.

B. Property acquired in whole or in part with funds provided pursuant to this Agreement shall be managed in accordance with the provisions of OMB A-110 (Revised).

C. Upon termination of this Agreement, SUBRECIPIENT shall transfer to CITY any CDBG funds on hand at the time of termination and any accounts receivable attributable to the use of CDBG funds.

19. Indemnification. To the fullest extent allowed by law, SUBRECIPIENT shall defend, indemnify, and save and hold harmless CITY, its officers, agents, employees and volunteers from any claims, suits or actions of every name, kind and description brought forth, or on account of, injuries to or death of any person (including but not limited to workers and the public), or damage to property, resulting from or arising out of SUBRECIPIENT's negligence or willful misconduct in the performance of this Agreement, save and except those matters arising from CITY's sole negligence or willful misconduct. The parties intend that this provision shall be broadly construed.

SUBRECIPIENT's responsibility for such defense and indemnity obligations shall survive the termination or completion of this Agreement for the full period of time allowed by law. The defense and indemnity obligations of this Agreement are undertaken in addition to, and shall not in any way be limited by, the insurance obligations contained in this Agreement.

20. Insurance. During the term of this Agreement SUBRECIPIENT shall maintain in full force and effect the following policies of insurance:

COVERAGE	LIMITS OF LIABILITY
Workers' Compensation	Statutory

Commercial General Liability	$1,000,000 each occurrence $2,000,000 aggregate Personal Injury: $1,000,000 each occurrence $2,000,000 aggregate
Automobile Liability	$1,000,000 combined single limit

a. Form. SUBRECIPIENT shall submit a certificate evidencing such coverage for the period covered by this Agreement in a form satisfactory to Risk Management and the City Attorney, prior to undertaking any work hereunder. Any insurance written on a claims made basis is subject to the approval of Risk Management and the City Attorney.

b. Additional Insureds. SUBRECIPIENT shall also provide a separate endorsement form or section of the policy showing CITY, its officers, agents, employees and volunteers as additional insureds for each type of coverage, except for Workers' Compensation and Professional Liability. Such insurance shall specifically cover the contractual liability of SUBRECIPIENT. The additional insured coverage under the SUBRECIPIENT's policy shall be primary and noncontributory, as evidenced by a separate endorsement or section of the policy, and shall not seek contribution from CITY's insurance or self-insurance. In addition, the additional insured coverage shall be at least as broad as the Insurance Services Office ("ISO") CG 20 01 Endorsement. Any available insurance proceeds in excess of the specified minimum insurance coverage requirements and limits shall be available to the additional insureds. Furthermore, the requirements for coverage and limits shall be: (1) the minimum coverage and limits specified in this Agreement; or (2) the full coverage and maximum limits of any insurance proceeds available to the named insureds..

c. Cancellation/Modification. SUBRECIPIENT shall provide ten (10) days written notice to CITY prior to cancellation or modification of any insurance required by this Agreement.

d. Umbrella/Excess Insurance. The limits of insurance required in this Agreement may be satisfied by a combination of primary and excess insurance. Any excess insurance shall contain or be endorsed to contain a provision that such coverage shall also apply on a primary and noncontributory basis for the benefit of CITY (if agreed to in a written contract) before CITY's own insurance shall be called upon to protect it as a named insured.

e. Reserved.

f. Self-Insured Retentions. Any self-insured retentions ("SIR") of SUBRECIPIENT must be disclosed to Risk Management for approval and shall not reduce the limits of liability. Policies containing any SIR provision shall provide or be endorsed to provide that the SIR may be satisfied by either the named insured or CITY. CITY reserves the right to obtain a full certified copy of any insurance policy and endorsements. The failure to exercise this right shall not constitute a waiver of such right.

g. Waiver of Subrogation. SUBRECIPIENT hereby agrees to waive subrogation which any insurer of SUBRECIPIENT may acquire from SUBRECIPIENT by virtue of the payment of any loss under a Workers Compensation, Commercial General Liability or Automobile Liability policy. All Workers Compensation, Commercial General Liability and Automobile Liability policies shall be endorsed with a waiver of subrogation in favor of CITY, its officers, agents, employees and volunteers for all worked performed by SUBRECIPIENT, its employees, agents and subcontractors.

h. Liability/Remedies. Insurance coverage in the minimum amounts set forth herein shall not be construed to relieve SUBRECIPIENT of liability in excess of such coverage, nor shall it preclude CITY from taking such other actions as are available to it under any other provisions of this Agreement or law.

21. Notice. Any notice required by this Agreement shall be delivered or sent by first class mail, United States postage prepaid, addressed as follows:

CITY	SUBRECIPIENT
City of Roseville City Manager 311 Vernon Street Roseville, CA 95678	Makis Stathopoulos Greek Orthodox Housing Corporation 4120 Douglas Blvd #306-511 Granite Bay, CA 95746

Either party may amend its address for notice by giving notice to the other party.

22. Successors in Interest. This Agreement shall be binding upon the heirs, successors, executors, administrators and assigns of the respective parties hereto.

23. Attorney's Fees; Venue; Governing Law. If either party commences any legal action against the other party arising out of this Agreement or the performance hereof, the prevailing party in such action shall be entitled to recover its reasonable litigation expenses, including but not limited to, court costs, expert witness fees, discovery expenses, and attorney's fees. Any action arising out of this Agreement shall be brought in Placer County, California, regardless of where else venue may lie. This Agreement shall be governed by and construed in accordance with the laws of the State of California.

24. Modification. This Agreement and each provision contained herein may be waived, amended, supplemented or eliminated only by mutual written agreement of the parties.

25. Severability. If any of the provisions contained in this Agreement are for any reason held invalid or unenforceable, such holding shall not affect the remaining provisions or the validity and enforceability of the Agreement as a whole.

26. Integrated Agreement. This is an integrated agreement and contains all of the terms, considerations, understanding and promises of the parties. It shall be read as a whole.

IN WITNESS WHEREOF, the City of Roseville, a municipal corporation, has authorized the execution of this Loan Agreement in duplicate by its City Manager and attested to by its City Clerk under the authority of Resolution No. _____, adopted by the Council of the City of Roseville on the ___ day of _____, 2024, and SUBRECIPIENT has caused this Agreement to be executed.

CITY OF ROSEVILLE, a municipal corporation

BY: _____
DOMINICK CASEY
City Manager

ATTEST:

BY: _____
CARMEN AVALOS
City Clerk

APPROVED AS TO FORM:

BY: _____
MICHELLE SHEIDENBERGER

GREEK ORTHODOX HOUSING CORPORATION, a California nonprofit corporation

BY: _____

its: PRESIDENT

and

BY: _____

its: Secretary

City Attorney

APPROVED AS TO SUBSTANCE:

BY: _____
MELISSA ANGUIANO
Economic Development Director

EXHIBIT A
FORM OF PROMISSORY NOTE

PROMISSORY NOTE SECURED BY DEED OF TRUST

$_____ Date:_____

1. FOR VALUE RECEIVED, the undersigned, GREEK ORTHODOX HOUSING CORPORATION, a California nonprofit corporation ("Maker"), promises to pay to the order of the CITY OF ROSEVILLE, a municipal corporation ("Lender"), the principal sum of five hundred seventy-one thousand eight hundred fifty dollars ($571,850.00) (the "Loan"), together with interest thereon in the manner provided for below.

2. Maker and Lender have entered into that certain Loan Agreement dated _____, 20__ (the "Loan Agreement"). Capitalized terms not defined in this Note shall have the meanings ascribed in the Loan Agreement. Pursuant to the Loan Agreement and the exhibits thereto, Lender is loaning to Maker certain funds in the amount of the Loan for acquisition of the Property. The Loan shall be due and payable on the terms contained in Section 3.2 of this Note.

3. Loan.

3.1 The Loan shall bear 3% simple interest.

3.2 This Note is forgivable, upon expiration of the term, or payable upon default of the Deed of Trust and Assignment of Rents Containing Covenants and Restrictions (the "Deed of Trust") of even date herewith and recorded against the Property; provided, however, that upon default of the Loan Agreement, the Deed of Trust or this Note the holder shall be entitled to exercise any remedies to which it may be entitled, including the imposition of the default rate of interest provided for in Section 5 herein.

3.3. The term of this Note is fifty-five (55) years.

4. This Note is secured by the Deed of Trust, which creates a lien upon the Property.

5. The Deed of Trust requires that the Property be used in the manner specified by the Deed of Trust for a period of thirty (30) years from the date thereof. In the event of any default of the Deed of Trust or this Note, simple interest shall accrue at the rate of ten percent (10%) (the "Default Rate") from the date of default. The portion of the principal amount of this Note subject to accrual of interest shall be computed by multiplying 1 /360 times the number of unexpired months of the term of this Note as of the date of default, times the total principal amount disbursed under this Note.

6. Maker shall have the right to prepay the principal amount of this Note, in whole or in part, at any time, together with interest at the Default Rate, computed as if in the event of default as set forth in Section 5 above.

7. Upon any default, the holder of this Note may apply payments received on any amounts due hereunder or under the terms of any instrument now or hereafter evidencing or securing the indebtedness as said holder may determine and, if the holder of this Note so elects, notice of election being expressly waived by Maker, the principal remaining unpaid with accrued interest shall at once become due and payable.

8. The Maker waives presentment, protest and demand, notice of protest, demand and dishonor and nonpayment of this Note and agrees to pay all costs of collection when incurred, including reasonable attorneys fees, and to perform and comply with each of the covenants, conditions, provisions and agreements of any of the undersigned contained in every instrument now evidencing or securing said indebtedness. No extension of the time for the payment of this Note or any installment hereof made by agreement with any person now or hereafter liable for the payment of this Note shall operate to release, discharge, modify, change or affect the original liability under this Note, either in whole or in part, of any of the undersigned not a party to such agreement.

9. Notwithstanding anything to the contrary herein, except as expressly permitted under the Loan Agreement, this Note shall be due in full upon the sale, transfer or encumbrance of the Property encumbered by the Deed of Trust, as provided in the Deed of Trust, subject to the provisions of Section 16 of the Deed of Trust, which is incorporated herein by reference.

10. At the election of Lender, any material default by Maker of the terms of the Loan Agreement or the Deed of Trust shall be a default of this Note.

11. Nothing in this Note shall create any relationship between Maker and Lender, other than a debtor-creditor relationship. Maker and Lender shall not be partners, joint venturers, equity venturers, or any other form of partnership or venture.

12. The provisions of this Promissory Note shall inure to the benefit of and be binding on the successors and assigns of the parties.

MAKER:
GREEK ORTHODOX HOUSING CORPORATION,
a California nonprofit corporation

By: _____
Its: _____

By: _____
Its: _____

EXHIBIT B
FORM OF DEED OF TRUST

RECORDING REQUESTED BY AND WHEN
RECORDED, PLEASE RETURN TO:

City Clerk
CITY OF ROSEVILLE
311 Vernon Street
Roseville, CA 95678

Exempt from recording fees
Pursuant to Gov't Code § 27383

Deed of Trust and Assignment of Rents
Containing Covenants and Restrictions

THIS DEED OF TRUST is made as of _____, 20___, by and between the Trustor, GREEK ORTHODOX HOUSING CORPORATION, a California nonprofit corporation ("Borrower"), whose address is 4120 Douglas Boulevard Suite 306511, Granite Bay, CA 95746-5936; the Trustee, _____, whose address is _____; and the Beneficiary, THE CITY OF ROSEVILLE, whose address is 311 Vernon Street, Roseville, CA 95678 ("Lender").

Borrower, in consideration of the indebtedness described below and the trust created by this Deed of Trust, irrevocably grants and conveys to Trustee, in trust with power of sale, the property ("Property") located in the City of Roseville, County of Placer, State of California and described in Exhibit "A", attached to and made a part of this Deed of Trust.

Together with all the improvements now or hereafter erected on the property, and all easements, rights, appurtenances, rents (subject, however, to the rights and authorities given to Lender to collect and apply such rents), royalties, mineral, oil and gas rights and profits, water, water rights, and water stock, and all fixtures, including but not limited to all gas and electric fixtures, engines and machinery, radiators, heaters, furnaces, heating equipment, steam and hot water boilers, stoves, ranges, elevators and motors, bathtubs, sinks, water closets, basins, pipes, faucets and other plumbing and heating equipment, cabinets, mantels, refrigerating plant and refrigerators, whether mechanical or otherwise, cooking apparatus and appurtenances, furniture, shades, awnings, screens, blinds and other furnishings, now or hereafter attached to the property, all of which, including replacements and additions thereto, shall be deemed to be and remain a part of the property covered by this Deed of Trust; and all of the foregoing, together with said property (or the leasehold estate if this Deed of Trust is on a leasehold) are herein referred to as the "Property;"

To secure to Lender (a) the repayment of the indebtedness evidenced by Borrower's note of even date herewith ("Note"), in the principal sum of five hundred seventy-one thousand eight hundred fifty dollars ($571,850.00), or such lesser amount as shall equal the aggregate amount disbursed to Borrower or for Borrower's account by Lender, in accordance with the Note; and (b) the performance of the covenants and agreements of Borrower contained in this Deed of Trust, the

Note and the Loan Agreement for 4950 Upland Drive Property Acquisition (Community Development Block Grant) ("Loan Agreement").

Borrower represents and covenants that Borrower is lawfully seized of the estate conveyed by this Deed of Trust and has the right to grant and convey the Property, and that Borrower will warrant and defend generally the title of the Property against all claims and demands, subject to any declarations, easements or restrictions listed in a schedule of exceptions to coverage in any title insurance policy insuring Lender's interest in the Property.

Borrower and Lender covenant and agree as follows:

1. Payment of Principal and Interest. Borrower shall promptly pay when due the principal and interest, if any, on the indebtedness evidenced by the Note. All payments received by Lender under the Note shall be applied by Lender first to interest payable on the Note, if any, and thereafter to the unpaid principal of the Note.

2. Charges; Liens. Borrower shall pay all taxes, assessments and other charges, fines and impositions attributable to the Property and leasehold payments or ground rents, if any, by Borrower making payment, when due, directly to the appropriate payee. Borrower shall promptly furnish to Lender all notices of amounts due under this paragraph, and in the event Borrower shall make payment directly, Borrower shall promptly furnish to Lender receipts evidencing such payments. Borrower shall pay when due any encumbrance, charge and lien, with interest in accordance with its terms, on the Property or any portion which are inferior or superior to this Deed of Trust.

3. Hazard Insurance. Borrower shall keep the improvements now existing or hereafter erected on the Property insured against loss by fire or hazards under a policy approved by Lender and which provides "special form" coverage in an amount at least equal to the replacement value of the structure. In addition, Borrower shall insure against loss of all furniture, equipment and other personal property owned by Borrower related to Borrower's operation of the Property.

   The insurance carrier providing the insurance shall be chosen by Borrower subject to approval by Lender; provided, that such approval shall not be unreasonably withheld. All premiums on insurance policies shall be paid by Borrower making payment, when due, directly to the insurance carrier, or in a manner agreed to by the Lender.

   All insurance policies and policy renewals shall be written with loss payable to the Lender. Lender shall have the right to hold the policies and policy renewals, and Borrower shall promptly furnish to Lender all renewal notices and all receipts of paid premiums. In the event of loss, Borrower shall give prompt notice to the insurance carrier and Lender. Lender may make proof of loss if not made promptly by Borrower.

   Unless Lender and Borrower otherwise agree in writing, insurance proceeds shall be applied to restoration or repair of the Property damaged, provided such restoration or repair is economically feasible and the security of this Deed of Trust is not hereby

impaired. If such restoration or repair is not economically feasible or if the security of this Deed of Trust would be impaired, the insurance proceeds shall be applied to repay the sums secured by this Deed of Trust.

Unless Lender and Borrower otherwise agree in writing, any such application of insurance proceeds to principal shall not extend or postpone the due date of any payment or change the amount of such payment. If under Section 17, the Property is acquired by Lender, all right, title and interest of Borrower in and to any insurance policies and proceeds of such policies resulting from damage to the Property prior to the sale of acquisition shall pass to Lender to the extent of the sums secured by this Deed of Trust immediately prior to such sale or acquisition.

4. Liability Insurance. Borrower shall maintain premises liability insurance for the Property in a form and coverage approved by Lender. The insurance carrier shall be chosen by the Borrower subject to approval by the Lender; provided, that such approval shall not be unreasonably withheld. All premiums shall be paid by Borrower. Lender shall be named as an additional insured.

5. Preservation and Maintenance of Property. Borrower shall keep the Property in good repair and shall not commit waste or permit impairment, demolition, or deterioration of the Property.

6. Protection of Lender's Security. Borrower shall appear in and defend any action or proceeding purporting to affect the security under this Deed of Trust or the rights of the Lender. If Borrower fails to perform the covenants and agreements contained in this Deed of Trust, or if any action or proceeding is commenced which materially affects Lender's interest in the Property, including, but not limited to, foreclosure, involuntary sale, eminent domain, insolvency, code enforcement, or arrangements or proceedings involving a bankrupt or decedent, then Lender, at Lender's option, upon notice to Borrower, may make such appearances, disburse such sums and take such action as is necessary to protect Lender's interest, including, but not limited to, disbursement of reasonable attorney's fees and entry upon the Property to make repairs.

   Any amounts disbursed by Lender pursuant to this Section, with interest, shall become additional indebtedness of Borrower secured by this Deed of Trust. Unless Borrower and Lender agree to other terms of payment, such amounts shall be payable upon notice from Lender to Borrower requesting payment, and shall bear interest from the date of disbursement at the highest rate permissible under applicable law. Nothing contained in this Section shall require Lender to incur any expense or take any action.

7. Inspection. Lender may make or cause to be made reasonable entries upon and inspections of the Property, provided that Lender shall give Borrower and occupants notice prior to any such inspection.

8. Condemnation. The proceeds of any award or claim for damages, direct or consequential, in connection with any condemnation or other taking of all or any part of

the Property, or for conveyance in lieu of condemnation, are hereby assigned and shall be paid to Lender. In the event of a taking of all of the Property, the proceeds shall be applied to the sums secured by this Deed of Trust, subject to any claims of prior lienholders, with the excess, if any, paid to junior lienholders and Borrower, as they may determine. In the event of the partial taking of the Property, unless Borrower and Lender otherwise agree in writing, and subject to any claims of prior lienholders, there shall be applied to the sums secured by this Deed of Trust such proportion of the proceeds as is equal to that proportion which the amount of the sums secured by this Deed of Trust immediately prior to the date of taking bears to the fair market value of the Property immediately prior to the date of taking, with the balance of the proceeds paid to junior lienholders and Borrower, as they may determine.

If the Property is abandoned by Borrower, or if, after notice by Lender to Borrower that the condemnor offers to make an award or settle a claim for damages, Borrower fails to respond to Lender within 30 days after the date such notice is mailed, Lender is authorized to collect and apply the proceeds, at Lender's option, either to restoration or repair of the Property or to the sums secured by this Deed of Trust.

Unless Lender and Borrower otherwise agree in writing, any such application of proceeds to principal shall not extend or postpone the due date of any payment or change the amount of such payment.

9. Borrower Not Released. Extension of the time for payment of the sums secured by this Deed of Trust granted by Lender to Borrower or any successor in interest of Borrower shall not operate to release, in any manner, the liability of the original Borrower and Borrower's successors in interest. Lender shall not be required to commence proceedings against such successor or refuse to extend time for payment by reason of any demand made by the original Borrower or Borrower's successors in interest.

10. Forbearance by Lender Not a Waiver. Any forbearance by Lender in exercising any right or remedy hereunder, or otherwise afforded by applicable law, shall not be a waiver or preclude the exercise of any such right or remedy. The procurement of insurance or the payment of taxes or other liens or charges by Lender shall not be a waiver of Lender's right to accelerate the maturity of the indebtedness secured by this Deed of Trust.

11. Remedies Cumulative. All remedies provided in this Deed of Trust are distinct and cumulative to any other right or remedy under this Deed of Trust, the Note, the Loan Agreement or afforded by law or equity, and may be exercised concurrently, independently or successively.

12. Successors and Assigns Bound; Joint and Several Liability; Captions. The covenants and agreements contained in this Deed of Trust shall bind, and the rights under this Deed of Trust shall inure to, the respective successors and assigns of Lender and Borrower. All covenants and agreements of Borrower shall be joint and several. The captions and headings of the paragraphs of this Deed of Trust are for convenience only and are not to be used to interpret or to define its provisions.

13. Notice. Except for any notice required under applicable law to be given in another manner, (a) any notice to Borrower provided for in this Deed of Trust shall be given by mailing such notice by certified mail addressed to Borrower at the address above, or at such other address as Borrower may designate by notice to Lender and (b) any notice to Lender shall be given by certified mail, return receipt requested, to Lender's address stated above or to such other address as Lender may designate by notice to Borrower. Any notice provided for in this Deed of Trust shall be deemed to have been given to Borrower or Lender when given in the manner designated.

14. Governing Law; Severability. This Deed of Trust shall be governed by the laws of the State of California. In the event that any provision or clause of this Deed of Trust or the Note conflicts with applicable law, such conflict shall not affect other provisions of this Deed of Trust or the Note which can be given effect without the conflicting provision, unless expressly stated otherwise, and to this end the provisions of the Deed of Trust and the Note are declared to be severable.

15. Borrower's Copy. Borrower shall be furnished a conformed copy of the Note, the Loan Agreement and this Deed of Trust at the time of execution or after recordation hereof.

16. Transfer or Refinancing of the Property; Assumption. If all or any part of the Property or an interest in the Property is sold or transferred or refinanced by Borrower without Lender's prior written consent, Lender may, at Lender's option, declare all the sums secured by this Deed of Trust to be immediately due and payable. Lender shall have waived such option to accelerate if, prior to the refinancing, sale or transfer, Lender and the person to whom the Property is to be sold or transferred reach agreement in writing that the loan may be assumed. If Lender has waived the option to accelerate provided in this Section and if Borrower's successor in interest has executed a written assumption agreement accepted in writing by Lender, Lender shall release Borrower from all obligations under this Deed of Trust, the Note and the Loan Agreement.

    If Lender exercises such option to accelerate, Lender shall mail Borrower notice of acceleration. Such notice shall provide a period of not less than 30 days from the date the notice is mailed, within which Borrower may pay the sums declared due. If Borrower fails to pay such sums prior to the expiration of such period, Lender may, without further notice or demand on Borrower, invoke any remedies permitted by Section l7.

17. Acceleration; Remedies. Except as provided in Section 16, upon Borrower's breach of any covenant or agreement of Borrower in this Deed of Trust, the Note or the Loan Agreement (including the covenants to pay when due any sums secured by this Deed of Trust and restricting transfer of the Property), Lender shall mail notice to Borrower specifying: (1) the breach; (2) the action required to cure such breach; (3) a date, no less than 30 days from the date the notice is mailed to Borrower, by which the breach must be cured; and (4) that failure to cure such breach on or before the date specified in the notice may result in acceleration of the sums secured by this Deed of Trust and sale of the

Property. If the breach is not cured on or before the date specified in the notice, Lender, at Lender's option, may declare all of the sums secured by this Deed of Trust to be immediately due and payable without further demand and may invoke the power of sale and any other remedies permitted by applicable law. Lender shall be entitled to collect from the Borrower, or sale proceeds, if any, all reasonable costs and expenses incurred in pursuing the remedies provided in this Section, including, but not limited to, reasonable attorney's fees.·

If Lender invokes the power of sale, Lender shall execute or cause Trustee to execute a written notice of the occurrence of an event of default and of Lender's election to cause the Property to be sold and shall cause such notice to be recorded in each county in which any portion of the Property is located. Lender or Trustee shall mail copies of such notice in the manner prescribed by applicable law to Borrower and to the other persons prescribed by applicable law. Trustee shall give public notice of sale to the persons and in the manner prescribed by applicable law. After the lapse of such time as may be required by applicable law, Trustee, without demand on Borrower, shall sell the Property at public auction to the highest bidder at the time and place and under the terms designated in the notice of sale, in one or more parcels and in such order as Trustee may determine. Trustee may postpone sale of all or any parcel of the Property by public announcement at the time and place of any previously scheduled sale. Lender or Lender's designee may purchase the Property at any sale.

Trustee shall deliver to the purchaser a Trustee's deed conveying the Property so sold without any covenant or warranty, express or implied. The recitals in the Trustee's deed shall be conclusive evidence of the truth of the statements contained in the recitals. Trustee shall apply the proceeds of the sale in the following order: (a) to all reasonable costs and expenses of the sale, including, but not limited to, reasonable Trustee's and attorney's fees and costs of title evidence; (b) to all sums secured by this Deed of Trust and (c) the excess, if any, to the person or persons legally entitled thereto as determined by Lender. In the event of a dispute regarding the excess funds, either Lender or Trustee may file an action in interpleader to determine who shall receive the funds and may then deposit the excess funds with the court.

18. Assignment of Rents; Appointment of Receiver; Lender in Possession. As additional security, Borrower assigns to Lender the rents of the Property, provided that Borrower shall, prior to acceleration under Section 16 or Section 17 or abandonment of the Property, have the right to collect such rents as they become due.

Upon acceleration under Section 16 or Section 1 7 or abandonment of the Property, Lender, in person, by agent or by judicially appointed receiver, shall be entitled to enter upon, take possession of and manage the Property and to collect the rents of the Property, including those past due. All rents collected by Lender or the Receiver shall be applied first to payment of the costs of management of the Property and collection of rents, including, but not limited to receiver's fees, premiums on receiver's bonds and reasonable attorney's fees, and then to the sums secured by this Deed of Trust. Lender and the receiver shall be liable to account only for those rents actually received. The

provisions of this Section, Section 16 and Section 17 shall operate subject to the claims of prior lienholders.

19. Operational Covenants and Permitted Use Restrictions. The permitted use of the Property under this Deed of Trust shall be only for Borrower's operation of a transitional housing facility providing housing and support services for six adults transitioning from homelessness to self-sufficiency. Borrower shall cooperate with Lender in entering into and adhering to the terms of a memorandum of understanding or similar agreement with Lender, a neighborhood association or similar neighborhood or municipal entity designated by Lender, in order to facilitate continued positive relationships between Borrower and its neighbors and to support the continuing success of the program operated by Borrower at the Property. Any change in use or cessation of such transitional housing and support services or other failure of compliance with the requirements of this paragraph will constitute a material default of this Deed of Trust and shall give rise to Lender's right to invoke any and all remedies available at law or in equity, including but not limited to the remedies provided in Section 17 or Section 18 above.

20. Reconveyance. Upon payment of all sums secured by this Deed of Trust, Lender shall request Trustee to reconvey the Property and shall surrender this Deed of Trust and all notes evidencing indebtedness secured by this Deed of Trust to Trustee. Trustee shall reconvey the Property without warranty and without charge to the person or persons legally entitled to such reconveyance. Such person or persons shall pay all costs of recordation, if any. The recitals, in the reconveyance, of any matters or facts shall be conclusive evidence of the truth of the statements contained in the recitals.

21. Substitute Trustee. Lender, at Lender's option, may from time to time remove Trustee and appoint a successor trustee to any Trustee appointed under this Deed of Trust. Without conveyance of the Property, the successor trustee shall succeed to all the title, power and duties conferred upon the Trustee by this Deed of Trust and applicable law.

22. Request for Notice. Borrower requests that copies of the notice of default and notice of sale be sent to Borrower's address.

23. Statement of Obligation. Lender may collect a reasonable fee for furnishing the statement of obligation as provided by Section 2943 of the Civil Code of California, as it may be amended from time to time.

24. Use of Property. Borrower shall not permit or suffer the use of any of the Property for any purpose other than the use for which the same was intended at the time this Deed of Trust was executed.

IN WITNESS WHEREOF, Borrower has executed this Deed of Trust.

BORROWER:

GREEK ORTHODOX HOUSING CORPORATION, a California nonprofit corporation

BY: _____

Its: _____

and

BY: _____

Its: _____

CALIFORNIA ALL-PURPOSE ACKNOWLEDGMENT **CIVIL CODE§ 1189**

A notary public or other officer completing this certificate verifies only the identity of the individual who signed the document to which this certificate is attached, and not the truthfulness, accuracy, or validity of that document.

State of California)
County of _____)

On _____ before me, _____,
Date *Here Insert Name and Title of the Officer*

personally appeared _____,
Name(s) of Signer(s)

who proved to me on the basis of satisfactory evidence to be the person(s) whose name(s) is/are subscribed to the within instrument and acknowledged to me that he/she/they executed the same in his/her/their authorized capacity (ies), and that by his/her/their signature(s) on the instrument the person(s), or the entity upon behalf of which the person(s) acted, executed the instrument.

I certify under PENALTY OF PERJURY under the laws of the State of California that the foregoing paragraph is true and correct.

WITNESS my hand and official seal.

Signature

Signature of Notary Public

CALIFORNIA ALL-PURPOSE ACKNOWLEDGMENT **CIVIL CODE§ 1189**

A notary public or other officer completing this certificate verifies only the identity of the individual who signed the document to which this certificate is attached, and not the truthfulness, accuracy, or validity of that document.

State of California)
County of _____)

On _____ before me, _____,
Date *Here Insert Name and Title of the Officer*

personally appeared _____,
Name(s) of Signer(s)

who proved to me on the basis of satisfactory evidence to be the person(s) whose name(s) is/are subscribed to the within instrument and acknowledged to me that he/she/they executed the same in his/her/their authorized capacity (ies), and that by his/her/their signature(s) on the instrument the person(s), or the entity upon behalf of which the person(s) acted, executed the instrument.

I certify under PENALTY OF PERJURY under the laws of the State of California that the foregoing paragraph is true and correct.

WITNESS my hand and official seal.

Signature

Signature of Notary Public

EXHIBIT "A"

Legal Description

THE LAND REFERRED TO HEREIN BELOW IS SITUATED IN THE CITY OF ROSEVILLE, COUNTY OF PLACER, STATE OF CALIFORNIA AND IS DESCRIBED AS FOLLOWS:

LOT 32, OF "HUNTING CREEK UNIT NO. 2", AS SHOWN ON THE MAP THEREOF, FILED IN THE OFFICE OF THE COUNTY RECORDER OF PLACER COUNTY, CALIFORNIA, ON JULY 21, 1977, BOOK "L" OF MAPS, AT PAGE 20. ,

APN: 471-200-013

EXHIBIT C
FORM OF REGULATORY AGREEMENT

AFFORDABLE HOUSING REGULATORY AGREEMENT

(Project: 4950 Upland Drive, Roseville)

This Affordable Housing Regulatory Agreement ("Regulatory Agreement") is made this ____ day of_____, 2024 ("Effective Date"), by and between the City of Roseville, a municipal corporation ("CITY"), and Greek Orthodox Housing Corporation ("DEVELOPER").

RECITALS

A. WHEREAS, DEVELOPER proposes to purchase real property located at 4950 Upland Drive in Roseville, California as more particularly described in **Exhibit A**, attached hereto and incorporated herein by this reference.

B. WHEREAS, DEVELOPER specifically proposes to develop a one hundred seventy six (176) unit multi-family apartment project on the Property, eighty-eight (88) of which shall be rented at rents that are affordable to low income (80% of Area Median Income (AMI)), and eight-eight (88) of which shall be rented at rents that are affordable to very low (50% AMI) income households (collectively, the "Regulated Units"), with up to one manager's unit.

C. WHEREAS, the Project is intended to serve as a community resource by providing decent, safe, and sanitary housing for households which would otherwise be unable to afford such housing.

D. WHEREAS, the CITY has agreed to provide DEVELOPER with financial assistance in the form of a loan in the combined principal amount of five hundred seventy one thousand eight hundred fifty dollars ($571,850) to assist DEVELOPER in the construction and permanent financing of the Project (the "Loan").

E. Reserved.

F. DEVELOPER is simultaneously: (1) executing one Loan Agreement, one Promissory Note and one Deed of Trust evidencing and regulating certain aspects the Loan; (2) recording the Deed of Trust to secure the Loan; and (3) as further consideration for the Loan, and to further the public interests of the CITY in seeing the Project maintained as affordable housing, DEVELOPER is executing and recording this Regulatory Agreement. The Loan Agreement, the Promissory Note, the Deed of Trust and this Regulatory Agreement are collectively referred to herein as the "Loan Documents."

G. The Loan is being made to DEVELOPER at an interest rate below the market rate in order to help achieve financial stability for the Project and to increase the supply of affordable rental housing in the CITY. In consideration for the Loan, DEVELOPER has agreed to observe all the terms and conditions set forth below.

NOW, THEREFORE, DEVELOPER and the CITY hereby agree as follows:

DEFINITIONS

The following terms have the meanings set forth herein wherever used in this Regulatory Agreement or attached exhibits.

1. **"CITY"** means the City of Roseville, a municipal corporation.

2. **"AREA MEDIAN INCOME"** (referred to herein as "AMI") means the median income for the Metropolitan Statistical Area which includes the City of Roseville ("MSA"), with adjustments for household size, as determined from time to time by the U.S. Department of Housing and Urban Development ("HUD") pursuant to Section 8(f)(3) of the United States Housing Act of 1937 as amended, or such other method of median income calculation applicable to the City of Roseville that HUD may hereafter adopt in connection with said Act. If HUD should cease making such determination, the CITY may designate another method of calculation of area median income used by any federal or state agency and applicable to the City of Roseville.

3. Intentionally deleted.

4. **"DEED OF TRUST"** means the Deed of Trust executed contemporaneously with this Regulatory Agreement and recorded against the Property as security for the Loan and other obligations by DEVELOPER, as trustor and the CITY as beneficiary, as well as any amendments to, modifications of, and restatements of said Deed of Trust.

5. **"DEVELOPER"** means Greek Orthodox Housing Corporation, together with its permitted successors and assigns.

6. **"LOAN"** means the loan of funds provided by the CITY to DEVELOPER for the Project.

7. **"LOAN DOCUMENTS"** means, collectively, the Promissory Notes, the Deeds of Trust and this Regulatory Agreement for the Project, as they may be amended, modified, or restated from time to time, along with all exhibits and attachments to these documents.

8. **"NOTES"** mean the promissory notes executed contemporaneously with this Regulatory Agreement by DEVELOPER in favor of the CITY evidencing the Loans, which are secured by the Deeds of Trust, as well as any amendments to, modifications of, or restatements of said promissory note(s). The Notes are on file with the City of Roseville.

9. **"PROJECT"** means the development, construction and operation of a no fewer than 176 unit residential, multi-family rental apartment project on the Property to be rented at rents that are affordable to Low, and Very Low income households, up to one (1) unregulated manager's unit and any additional improvements, landscaping, roads, and parking spaces existing thereon, as the same may from time to time exist.

10. **"PROPERTY"** means the real property located at 4950 Upland Drive, Roseville, California, 95678 identified and described in **Exhibit A**, attached hereto and incorporated into this Regulatory Agreement by this reference, and any buildings or improvements now or hereafter situated on such real property.

DRAFT

11. **"QUALIFYING HOUSEHOLD"** means a household in which household income does not exceed the percentage of Area Median Income prescribed for the applicable housing unit by the terms of this Regulatory Agreement.

12. **"QUALIFYING RENT"** means the maximum monthly rent allowed under **Exhibit B** "adjusted for family size appropriate to the unit" (as such term is defined by California Health and Safety Code Sections 50052.5 and 50053) including a reasonable allowance for tenant-paid utilities (also known as Utility Allowance). During the period a regulatory agreement governing the allocation and award of any federal tax credits is in effect, Qualifying Rent may be determined in accordance with such regulatory agreement and 26 U.S.C., Section 42, for initial and ongoing occupancy of tenants.

13. **"REGULATED UNITS"** means_____( ) rental dwelling units of the _____ (_) rental dwelling units on the Property constructed for the Project that shall be rented at rents that are affordable Low and Extremely Low income households and having the following composition:_____(__)_____(1) bedroom units,_____(_) two (2) bedroom units, and (__)_____(_) bedroom units.

DEVELOPER'S OBLIGATIONS

14. **COMPLIANCE WITH LOAN DOCUMENTS.** DEVELOPER's actions with respect to the Property and the use of Loan funds shall at all times be in full conformity with the requirements of the Loan Documents.

15. **TERM OF AGREEMENT.** This Regulatory Agreement shall commence upon the Effective Date and shall remain in full force for a period of fifty-five (55) years from the date of recordation of the first Certificate of Occupancy, whether permanent, temporary or conditional, or, in the event the Project has multiple buildings or structures, a Certificate of Occupancy for the last habitable building or structure for the Project. The obligations in this Regulatory Agreement shall remain effective and fully binding on DEVELOPER for the term of this Regulatory Agreement regardless of any expiration of the term of any loan, any payment, or prepayment of any loan, any assignment of a note, any reconveyance of a deed of trust, or any sale, assignment, transfer, or conveyance of the Property (other than certain transfers by foreclosure, deed in lieu of foreclosure, exercise of the power of sale or other similar transfer), unless terminated earlier by the CITY in a recorded writing.

PROJECT OCCUPANCY AND RENTS

16. **OCCUPANCY OF PROJECT.** DEVELOPER shall limit, for the full term of this Regulatory Agreement the rental of Regulated Units to Qualifying Households according to the schedule contained in **Exhibit B** herein, which is hereby incorporated by reference into this Regulatory Agreement. The income levels and other qualifications of applicants shall be certified prior to initial occupancy in conformance with the Final Management Plan and the City of Roseville's rules governing income certification, as these rules may be amended from time to time by California law or as required in order to comply with California law. Specifically, DEVELOPER covenants and agrees that for the full term of this Regulatory Agreement it shall reserve for occupancy: (i) __ (__) one-bedroom, _ (__) two-bedroom, and __ (__) three-bedroom Regulated Units for households whose income does not exceed thirty percent (30%) of AMI; and (iv) (_) two-bedroom, and_ (__) three-bedroom Regulated Units for households whose income does not exceed sixty percent (60%) of AMI. The remaining two (2) unregulated units shall include at least one two bedroom unit reserved for use by on-site Project management staff.

DRAFT

Preference shall be given to prospective tenants who are elderly, disabled, veterans (persons who served in the active military, naval, or air service and who were discharged or released from such service under conditions other than dishonorable), and persons who are residents and/or who are employed within the City of Roseville at the time of rental application to the extent permitted under applicable law, regulations and state and federal affordable housing guidelines.

The Project shall be owned, managed and operated as a single, multi-family residential rental project, which may be comprised of several buildings and structures, each consisting of more than one residential dwelling unit, together with facilities functionally related and subordinate thereto, in accordance with the applicable provisions of the Internal Revenue Code and applicable California law, as the same may be amended from time to time. All of the residential dwelling units in the Project will be similarly constructed and shall contain separate and complete facilities for living, sleeping, eating, cooking and sanitation for a single person or family, including sleeping area, bathing and sanitation facilities and cooking facilities equipped with a cooking range, refrigerator and sink. None of the residential dwelling units shall be utilized, at any time, on a transient basis. Neither the Project, nor any portion thereof, shall ever be used as a hotel, motel, hostel, vacation rental, dormitory, fraternity house, sorority house, rooming house, hospital, nursing home, sanitarium, rest home or trailer park, or court. DEVELOPER shall further ensure that reasonable support services for the residents of this Project are provided, such as, but not limited to, life skills training, social and recreational programs, educational, health and nutritional programs, and computer training.

17. **PROJECT RENTS.** Rents for Regulated Units shall be limited to Qualifying Rents as set forth in **Exhibit B** as the same may be revised from time to time in accordance with this Regulatory Agreement and applicable federal or state laws and regulations. Rent shall be no greater than considered "affordable rent" for the applicable household pursuant to Sections 50052.5 and 50053 of the California Health and Safety Code, as amended, or any successor statute thereto, including the use of a CITY-approved utility allowance. Nothing in this Regulatory Agreement shall prevent DEVELOPER from charging lower rents.

18. **SECURITY DEPOSITS.** Any security deposits collected by DEVELOPER or DEVELOPER's agent shall be kept separate and apart from all other funds in a trust account with a depository insured by the Federal Deposit Insurance Corporation or other comparable federal deposit insurance program and shall be held and disbursed in accordance with California law. The balance in the trust account shall at all times equal or exceed the aggregate of all outstanding obligations, plus accrued interest thereon.

19. **RENTAL INCREASES FOR EXISTING TENANTS ON THE PROPERTY.** Irrespective of when income limits are published under applicable tax credit law, rents for Regulated Units may be adjusted no more frequently than: (a) after the initial twelve (12) months following the date of initial occupancy or (b) every twelve (12) months following the last permissible date of recorded rental adjustment. Additionally, in no event shall the amount of annual rent increase result in a total rent amount that is in excess of that allowed by the Tax Credit Law. Rents for Regulated Units may be adjusted annually to the then current California Tax Credit Allocation Committee Rent Limits.

20. **CONDOMINIUM CONVERSION PROHIBITED.** DEVELOPER shall not convert Project units, including Regulated Units and/or any unregulated units, to condominium or cooperative ownership or sell condominium or cooperative conversion rights to the Project units, during the term of this Regulatory Agreement.

DRAFT

21. **NONDISCRIMINATION.**

A. DEVELOPER herein covenants by and for itself, its subcontractors, its successors and assigns, and all persons claiming under or through them, that there shall be no discrimination against or segregation of, nor denial of the benefits of this Regulatory Agreement to, any person or group of persons, on the basis of race, color, ancestry, national origin or ethnic group identification, religion or religious creed, sex, gender or self-identified gender, gender expression, sexual orientation, marital status, age, mental disability, physical disability or medical condition (including cancer, HIV and AIDS), genetic information, military or veteran status, familial status, source of income, or political affiliation or belief, nor any unlawful discrimination against any employee or applicant for employment because of race, color, ancestry, national origin or ethnic group identification, religion or religious creed, sex, gender or self-identified gender, gender expression, sexual orientation, marital status, age (over 40), mental disability, physical disability or medical condition (including cancer, HIV and AIDS), use of family care leave, genetic information, military or veteran status, familial status, source of income, or political affiliation or belief. DEVELOPER shall ensure that the evaluation and treatment of employees and applicants for employment are free of such discrimination or harassment. In addition to the foregoing general obligations, DEVELOPER shall comply with the provisions of the Fair Employment and Housing Act (Government Code Section 12900, et seq.), the regulations promulgated thereunder (Title 2, California Code of Regulations, Section 10000, et seq.), the provisions of Article 9.5, Chapter 1, Part 1, Division 3, Title 2 of the Government Code (Sections 11135-11139.5) and any state or local regulations adopted to implement any of the foregoing, as such statutes and regulations may be amended from time to time. To the extent this Regulatory Agreement subcontracts to DEVELOPER services or works required of the CITY by the State of California pursuant to agreement between the CITY and the State, the applicable regulations of the Fair Employment and Housing Commission implementing Government Code Section 12990 (a) through (f), set forth in Subchapter 5 of Division 4.1 of Title 2 of the California Code of Regulations are expressly incorporated into this Regulatory Agreement by reference and made a part hereof as if set forth in full, and DEVELOPER and any of its subcontractors shall give written notice of their obligations thereunder to labor organizations with which they have collective bargaining or other agreements.

B. The provisions of paragraph (A) shall further apply to the leasing, subleasing, transferring, use, occupancy, tenure or enjoyment of the Project, and DEVELOPER and any person claiming under or through the DEVELOPER, shall not establish or permit any such practice or practices of discrimination or segregation with reference to the selection, location, number, use or occupancy of tenants, lessees, sublessees, subtenants, or vendees in the Project.

C. DEVELOPER shall include the provisions contained in this section in all contracts and subcontracts related to the Project.

D. The requirements in this section shall survive the repayment of the Loan, and the reconveyance of the Deeds of Trust.

22. **MANAGEMENT RESPONSIBILITIES.** DEVELOPER is specifically responsible, subject to its obligations herein, for all management functions with respect to the Property, including, without limitation, the selection of tenants, certification and recertification of household size and income, evictions, collection of rents and deposits, maintenance, landscaping, routine and extraordinary repairs, replacement of capital items, and security. The CITY shall have no responsibility over management of the Property. A resident manager or an alternative designated contact shall be required to reside on-site.

DRAFT

23. **INTENTIONALLY DELETED.**

24. **DRAFT AND FINAL MANAGEMENT PLANS.**

A. **DRAFT MANAGEMENT PLAN.** DEVELOPER shall prepare and submit to the CITY a Draft Management Plan for the CITY's review and approval. The Draft Management Plan shall be submitted to the CITY at least one hundred eighty (180) calendar days prior to the anticipated date for completion of construction of the Project. The Draft Management Plan shall contain, but is not limited to, specific statement as to (1) the identity, experience and duties of all employees of the Management Agency who intend to manage the Project; (2) marketing policies and strategies; (3) tenancy occupancy rules and regulations; (4) rental procedures and tenant income limitation; (5) eviction procedures; (6) operating policies and guidelines; (7) reserve account policies; (8) maintenance and capital improvement policies; and (9) shall provide as an exhibit thereto a sample form of lease agreement. Upon transfer of OWNER/ DEVELOPER's interest in the Project, the party to whom the Project is transferred shall, as a condition of such transfer, provide the CITY with a copy of such party's Management Plan for the Project, which plan shall provide statements as called for herein.

B. **CITY REVIEW OF DRAFT MANAGEMENT PLAN.** Upon submittal of the Draft Management Plan by DEVELOPER to the CITY, the CITY shall review the Draft Management Plan and provide written comments to DEVELOPER within ninety (90) calendar days or as soon thereafter as is practicable.

C. **FINAL MANAGEMENT PLAN.** Prior to issuance of any Certificate of Occupancy for the Project, DEVELOPER shall submit a Final Management Plan to the CITY for its review and final approval no later than thirty (30) calendar days prior to the anticipated date for completion of construction of the Project.

Notwithstanding the foregoing, the CITY shall have the right to review and approve any proposed amendments to DEVELOPER's contract with its management firm, or any new management contracts, during the term of this Regulatory Agreement; provided, however, that the CITY's approval shall not be required for a renewal of the initial management contract.

25. **MANAGEMENT AGENCY.** The Project shall at all times be managed by an experienced Management Agency reasonably acceptable to the CITY, with demonstrated ability to operate residential facilities like the Project in a manner that will provide decent, safe and sanitary housing. The City shall have the right to require a change in the Management Agency or the on-site manager for reasonable cause at any time during the term of this Regulatory Agreement, subject to the prior written consent of any senior lenders and the tax credit investor. During the monitoring, the CITY will assess the Management Agency's ability to operate the Project in a decent, safe and sanitary manner. Calls for police and fire services at a significantly greater number or with a significantly greater frequency of serious calls and frequent fair housing complaints by tenants or applicants may be among

criteria considered by the CITY in determining whether any management change shall be required.

DEVELOPER shall submit for the CITY's approval the identity of any proposed Management Agency. DEVELOPER shall also submit such additional information about the background, experience, and financial condition of any proposed Management Agency as is reasonably necessary for the CITY to determine whether the proposed Management Agency meets the standards for a qualified Management Agency set forth above.

If the proposed Management Agency meets the standards for a qualified Management Agency set forth above, the CITY shall approve the proposed Management Agency by notifying OWNER/DEVELPER in writing. Unless the proposed Management Agency is disapproved by the CITY within thirty (30) calendar days of said submission of identity and qualifications of proposed Management Agency, which disapproval shall state reasonable specificity the basis for disapproval, it shall be deemed approved. The CITY hereby approves of the use of FPI Management, Inc., a Nevada Corporation, engaged in the provision of multi-family residential and commercial property management services, as the designated initial Management Agency for the Project.

26. **DISMISSAL OF MANAGEMENT AGENCY.** Within thirty-five (35) calendar days from DEVELOPER's receipt of any recommendation by CITY staff to dismiss the Management Agency, DEVELOPER shall either dismiss the Management Agency or request a meeting with CITY staff representatives to discuss further. If an agreement cannot be reached with CITY staff representatives, DEVELOPER may request a public meeting to discuss the CITY recommendation. If, after conducting a requested public meeting, the CITY Council supports said recommendation of CITY staff, DEVELOPER shall promptly dismiss the Management Agency and shall appoint as the new Management Agency a person or entity which meets the standards for Management Agency and is approved by the CITY.

27. **MAINTENANCE AND SECURITY.** DEVELOPER shall at its own cost and expense maintain the Property in good condition, in good repair, and in decent, safe, sanitary, habitable, and tenantable living condition for the benefit of Project occupants. DEVELOPER shall not commit or permit any waste on or to the Property, and shall prevent and/or rectify any physical deterioration of the Property. DEVELOPER shall provide adequate security for the safety of Project occupants and to minimize the need for public safety calls. DEVELOPER shall maintain the Property in conformance with all applicable state, federal, and local laws, ordinances, codes, and regulations and the Management Plan; but DEVELOPER's maintenance obligations shall not be limited only to the standards contained in these laws or the Management Plan.

In the event the DEVELOPER fails to maintain the Property in accordance with the foregoing standards, and after at least ten (10) calendar days' prior written notice to DEVELOPER and the Senior Lenders, the CITY or its agent may, but shall be under no obligation to, enter upon the Property, make such repairs or replacements as are deemed necessary in the CITY's reasonable discretion (with the prior written consent of the Senior Lenders), and provide for payment thereof. Any amount advanced by the CITY to make such repairs, together with interest thereon from the date of such advance at the same rate of interest as specified in the Notes for the Project (unless payment of such an interest rate would be contrary to applicable law, in which case interest shall accrue at the highest rate then allowed by applicable law), shall become an additional obligation of DEVELOPER to the CITY, and shall be secured by the Deeds of Trust.

28. **UNIT VACANCIES.** DEVELOPER shall use its best efforts to fill vacancies in Regulated Units as quickly as possible.

29. **INSPECTIONS AND RECORDS.** DEVELOPER shall maintain complete, accurate and current records which clearly document DEVELOPER's performance of its obligations to operate the Property and the Project under the terms of this Regulatory Agreement. DEVELOPER shall submit any records reasonably requested by the CITY in connection with the Project to the CITY within ten (10) business days of the CITY's request. DEVELOPER shall also permit the CITY or its duly authorized representatives to enter and

inspect the Property and the Project for compliance with obligations under this Regulatory Agreement upon seventy-two (72) hours advance notice of such visit by the CITY to DEVELOPER or DEVELOPER's Management Agency and to tenants of any inspected Project units, subject to the provisions of the leases regarding inspection and entry rights, which provisions must otherwise be consistent with state law.

All tenant lists, applications and waiting lists relating to the Regulated Units shall at all times be kept separate and identifiable from any other business of the DEVELOPER and shall be maintained as required by the CITY, in a reasonable condition for proper audit and subject to examination during business hours by representatives of the CITY. DEVELOPER shall retain copies of all materials obtained or produced with respect to occupancy of the Regulated Units for a period of at least five (5) years.

The CITY shall also have the right to perform on-site inspections of the Project, including the Regulated Units, as is reasonably required to ensure compliance with the Loan Documents, but in any case at least once per year. DEVELOPER agrees to cooperate in such inspection(s). If the CITY desires to inspect the interior of the Regulated Units, the CITY shall give DEVELOPER sufficient notice to allow DEVELOPER to give seventy-two (72) hours' notice to tenants.

30. **ANNUAL REPORTS.** DEVELOPER shall provide any information reasonably requested by the CITY in connection with the Project. In particular, upon request and reasonable notice by CITY, DEVELOPER shall provide the CITY with annual reports required by the Regulatory Agreement, including but not limited to reports regarding the Project's rent and occupancy levels, as well as the annual operating budget. Without limitation, DEVELOPER shall provide the CITY no later than the one hundred twentieth (120th) day after the close of each calendar year following the date of this Regulatory Agreement, hardcopies or PDF copies of the following documents:

A. Insurance certificates detailing all coverage required under the Deeds of Trust.

B. Evidence of payment of property taxes or property tax exemption for the Project, as applicable.

C. Financial statements for the Project.

D. An occupancy report including: (i) the verified income of each tenant or household; (ii) the number and demographic information of tenants in each household; (iii) the current rents charged each tenant or household and whether these rents include utilities; (iv) the date tenancy commenced for each Unit; and (v) any additional information required by California Health and Safety Code Section 33418.

E. Certifications of eligibility for all tenants of Regulated Units at the time of initial occupancy. Such certification shall include verified income statements on a form provided by the CITY. DEVELOPER shall retain in the tenant's file all verifications of tenant's initial certification income (paycheck stubs, benefit statements, etc.).

Within fifteen (15) calendar days after receipt of a written request, DEVELOPER shall provide any other information or completed forms requested by the CITY to ensure compliance with the Loan Documents or this Regulatory Agreement.

If similar reports on some or all of the Regulated Units are required for regulatory

DRAFT

compliance with other financing programs, those reports may be deemed satisfactory for the purpose of this section by the CITY, with respect to the portion of the requirements of this section covered by such reports, provided that copies are provided on an annual basis to the CITY with an owner certification addressed to the CITY certifying that the DEVELOPER has complied with this Regulatory Agreement.

31. **MONITORING/NON-COMPLIANCE/CURE.** DEVELOPER's compliance with the provisions of this Regulatory Agreement shall be reviewed at least annually, and at such other times as the CITY may require, upon thirty (30) calendar days prior written notice from the CITY. During any such review, DEVELOPER shall bear the burden of proof to demonstrate good faith compliance with the terms of this Regulatory Agreement. If, as a result of such review, the CITY finds and determines that DEVELOPER has not complied in good faith with the terms and conditions of this Regulatory Agreement, the CITY shall give written notice to DEVELOPER of its findings and of the exact nature of DEVELOPER's non-compliance. DEVELOPER shall be given a period of sixty (60) calendar days after delivery of any such notice in which to cure, to the reasonable satisfaction of the CITY, any non-compliance; provided that, if the non-compliance cannot be cured within sixty (60) calendar days, DEVELOPER shall not be in breach so long as DEVELOPER is diligently undertaking to cure such non-compliance. In the event the CITY fails to give DEVELOPER notice of any non-compliance at or before the annual review, DEVELOPER shall not be held responsible for any failure to comply with the terms and conditions of this Regulatory Agreement during the year covered by the annual review.

32. **CITY REMEDIES FOR BREACH.** If DEVELOPER is unable or otherwise fails to cure any non-compliance within sixty (60) calendar days (or longer as provided herein) after the CITY delivers notice of non-compliance, the CITY may, in addition to any other remedy provided by law or equity, modify or terminate this Regulatory Agreement, revoke the Project approval, or take any other action available to it under this Regulatory Agreement.

In particular, and without limitation by reason of enumeration, DEVELOPER acknowledges and agrees that failure to cure any non-compliance under this Regulatory Agreement, whether by DEVELOPER or any successor, shall, at the option of the CITY, constitute a breach and default under this Regulatory Agreement as to all other property within the Project. In addition, and without limitation by reason of enumeration, OWNER/DEVLOPER acknowledges and agrees that the CITY shall have the right to withhold issuance of all building permits within the Project until such breach is cured.

Any partners of DEVELOPER shall have the right to cure any default. The CITY agrees that any cure of a default by any partners of DEVELOPER shall be deemed to be a cure by DEVELOPER, and shall be accepted or rejected on the same basis as if made or tendered by DEVELOPER.

In the event of any breach/default or violation of any agreement, obligation, or warranty under this Regulatory Agreement, the CITY shall give written notice to DEVELOPER, with copies to the Senior Lenders, specifying: (a) the nature of the breach or violation; (b) the action required to cure the breach or violation; and (c) a date, which shall not be less than thirty (30) calendar days from the date of the notice, by which such action to cure must be taken. (provided that, if the non- compliance cannot be cured within thirty (30) calendar days, DEVELOPER shall not be in breach so long as DEVELOPER is diligently undertaking to cure such non-compliance.) If DEVELOPER fails to cure the breach or violation as provided above, the CITY additionally has the right, at its sole election, to:

A. Declare a default under the Notes, accelerate the indebtedness evidenced by the Notes, and with respect to the Loan, proceed with foreclosure under the

DRAFT

Deeds of Trust;

B. Bring an action for equitable relief seeking the specific performance by DEVELOPER of the terms and conditions of this Regulatory Agreement, and/or enjoining, abating, or preventing any violation of said terms and conditions, and/or seeking declaratory relief;

C. Upon lawful order of a court with proper jurisdiction, enter upon, take possession of, and manage the Property and the Project, either in person, by agent, or by a receiver appointed by a court, and collect any rents, income, deposits, or reserves and apply them to operate the Property and the Project, and continue in possession until such time as the court determines that DEVELOPER is in a position to operate the Property and the Project in compliance with this Regulatory Agreement;

D. After notice provided for herein, make such repairs or replacements to the Property as are necessary and provide for payment thereof;

E. Declare an event of default under the Loan Documents and pursue the remedies described therein; and/or

F. Pursue any other remedy allowed at law or in equity.

The CITY's rights hereunder shall be in addition to, and not in lieu of, every other right or remedy provided for herein or now or hereafter existing at law or in equity by statute or otherwise, including, but not limited to injunctive relief, specific performance and damages. The exercise or beginning of exercise by the CITY of any one or more rights or remedies, provided herein or now or hereafter existing at law or in equity by statute or otherwise, shall not preclude the simultaneous or later exercise by the CITY of any or all other rights or remedies provided for in this Regulatory Agreement or now or hereafter existing at law or in equity or by statute or otherwise. All such rights and remedies shall be considered cumulative and nonexclusive.

33. **FEES, TAXES, AND OTHER LEVIES.** DEVELOPER shall be responsible for payment of all fees, assessments, taxes, charges, and levies imposed by any public authority or utility company with respect to the Property and the Project, and shall pay such charges prior to delinquency in order to prevent any penalty from accruing or any lien or charge from attaching to the Property or the Project. However, DEVELOPER shall not be required to pay any such charge so long as (a) the legality thereof is being contested in good faith and by appropriate proceedings; and (b) DEVELOPER maintains reserves adequate to pay any contested liabilities. In the event DEVELOPER exercises its right to contest any tax, assessment, or charge against it, DEVELOPER, on final determination of the proceeding or contest, shall immediately payor discharge any decision or judgment rendered against it, together with all costs, charges and interest.

34. **INSURANCE COVERAGE.** DEVELOPER shall cause to have in full force and effect during the term of this Regulatory Agreement continuous insurance coverage as required by the Loan Agreement.

35. **PROPERTY DAMAGE OR DESTRUCTION.** Subject to the requirements of Senior Lenders, and if economically feasible in the CITY's reasonable judgment after consultation with the DEVELOPER, if any improvement now or in the future on the Property is damaged or destroyed, then the DEVELOPER shall, at its cost and expense, diligently undertake to repair or restore such improvement consistent with the plans and specifications for the Development. Such work or repair shall be commenced no later than the later of one

DRAFT

hundred twenty (120) calendar days after receiving requisite permits from the City, or such longer period approved by the CITY in writing, after the damage or loss occurs and sixty (60) calendar days following receipt of the insurance proceeds, and shall be complete within one year thereafter or such reasonable time as may be required. Any insurance proceeds collected for such damage or destruction shall be applied to the cost of such repairs or restoration and, if such insurance proceeds shall be insufficient for such purpose, then the DEVELOPER shall make up the deficiency. If the DEVELOPER does not make repairs, then any insurance proceeds collected for such damage or destruction shall be promptly delivered to the CITY as a special repayment of the Loan, subject to the rights of the Senior Lenders, if any.

GENERAL PROVISIONS

36. **SUBORDINATION.** Except as expressly set forth herein or in the Loan Agreement, this Regulatory Agreement shall not be subordinated in priority to any other interest in the Property that was not recorded on or prior to the date of recordation of this Regulatory Agreement, unless the CITY expressly consents, in writing, to the subordination or junior priority of this Regulatory Agreement. Such consent, if any, shall be within the CITY's sole discretion, and may only be permitted, if at all, for purposes that conform with the circumstances authorized by California Health and Safety Code Section 33334.14(a), and to the extent the proposed subordination does not jeopardize the CITY's security interest in the property and is otherwise consistent and compliant with all legal standards, including eligibility requirements and other conditions imposed by funding sources for the Project and any Loan. Notwithstanding the foregoing, consent is expressly given herein to subordinate this Regulatory Agreement as reasonably required for Property financing, including, without limitation, any required subordination based on construction or permanent loan financing and tax credits financing.

37. **TRANSFER AND ENCUMBRANCE OF PROPERTY.** During the term of this Regulatory Agreement, DEVELOPER shall not make or permit any sale, agreement to sell, assignment, conveyance, lease (other than the rental of Project units to eligible residential tenant occupants), or transfer of the Property or any part thereof, including the sale of any general or limited partnership interests, the removal of any general partner, or any substantial change in operational or management control over the Property (collectively referred to as "Transfers"), without the prior written consent of the CITY, which consent shall not be unreasonably withheld The limitations on DEVELOPER's right of assignment or other transfer shall not apply to any foreclosure, deed in lieu of foreclosure, or other remedial action lawfully taken by any Senior Lender holding a security interest in the Property with priority over the CITY's interests; nor shall they apply to: (i) the transfer of limited partner interests in DEVELOPER, (ii) the removal of a general partner or a limited partner pursuant to the terms and conditions of DEVELOPER's organizational document; and/or (iii) transfers to a tax-exempt entity under the direct control of or under common control with DEVELOPER.

The CITY shall give its consent to a Transfer provided that it determines all of the following conditions are met: (a) DEVELOPER is in compliance with this Regulatory Agreement and the Loan Documents, or the Transfer will cure existing violations of this Regulatory Agreement or the Loan Documents; (b) the transferee agrees to assume all obligations of DEVELOPER imposed by this Regulatory Agreement and the Loan Documents; (c) the transferee demonstrates to the CITY's satisfaction that it is capable of owning and/or operating the Property and the Project in full compliance with this Regulatory Agreement and the Loan Documents; (d) the terms of the Transfer shall not jeopardize the CITY's security interest in the Property and is otherwise in full compliance with all legal standards, including eligibility requirements and other conditions imposed by funding sources for the Project and any Loan; and (e) the Transfer has been approved by the CITY's governing body, if such approval is

DRAFT

required.

During the term of this Regulatory Agreement, DEVELOPER shall not engage in any financing or other transaction creating any mortgage or other encumbrance or lien upon the Property and/or the Project (except for any financing provided by the CITY), without the prior written consent of the CITY, which consent may be withheld in the CITY's reasonable discretion. The CITY may give its consent to such financing if and only to the extent necessary to maintain or improve the affordability or condition of the Property and/or the Project. The term "financing" in this section shall not include the refinancing of an existing loan.

38. **NONLIABILITY OF OFFICIALS, EMPLOYEES, AND AGENTS.** No member, official, officer, director, employee, agent, or independent contractor of the CITY shall be personally liable to DEVELOPER or third-party beneficiaries for any obligation created under the terms of this Regulatory Agreement.

39. **INDEMNITY AND WAIVER.** Notwithstanding the insurance coverage required herein and to the fullest extent allowed by law, DEVELOPER shall defend, indemnify and save and hold the CITY, its members, officials, officers, directors, employees, agents, and independent contractors (collectively "Indemnitees"), harmless against any losses, damages, liabilities, claims, demands, judgments, actions, court costs, and legal or other expenses (including attorneys' fees) which Indemnitees may incur as a result of (1) DEVELOPER's failure to perform any obligations as and when required by this Regulatory Agreement; (2) any failure of DEVELOPER's representations or warranties to be true and complete in any material respect; or (3) any act or omission by DEVELOPER or any contractor, subcontractor, management agent, or supplier with respect to the Project or the Property, except to the extent that such losses are caused solely by the negligence or willful misconduct of Indemnitees. The duty of the DEVELOPER to indemnify includes the duty to defend Indemnitees in any court action, administrative action, or other proceeding brought by any third party arising from the Project or the Property. DEVELOPER's duty to defend and indemnify Indemnitees shall survive the term of this Regulatory Agreement, the reconveyance of the Deeds of Trust, and any release of part or all of the Property from the burdens of this Regulatory Agreement. The parties intend that this provision shall be broadly construed.

The parties hereby acknowledge and agree that, without limitation, the Loan and any Project entitlements, permits, or approvals have conferred upon the DEVELOPER and/or the Project either a direct financial contribution or other form of assistance pursuant to Section 1954.52(b) of the CHRHA.

40. **GOVERNING LAW AND VENUE.** This Regulatory Agreement shall be interpreted under and be governed by the laws of the State of California, except for those provisions relating to choice of law and those provisions preempted by federal law. Any action arising out of this Regulatory Agreement shall be brought in Placer County, California, regardless of where else venue may lie.

41. **CONFLICTS.** In the event of any conflict among the Loan Documents, the most restrictive requirements shall apply. In addition, the Project may be subject to the terms of other governmental subsidy programs. This Regulatory Agreement and the agreements entered into by DEVELOPER pursuant to these subsidy programs independently regulate the Regulated Units in the Project. If any provision of another regulatory agreement is found in conflict or in contradiction with the terms of this Regulatory Agreement in relation to the Regulated Units, the most restrictive requirement, providing the greatest affordability to the most tenants for the longest term, shall apply to those Regulated Units, except as otherwise specified.

DRAFT

42. **ATTORNEYS' FEES AND COSTS.** In the event that a legal or administrative action is brought to interpret or enforce the terms of this Regulatory Agreement, the prevailing party in such action shall be entitled to recover its reasonable litigation expenses, including but not limited to, court costs, expert witness fees, discovery expenses, and attorneys' fees.

43. **TIME.** Time is of the essence in this Regulatory Agreement.

44. **CONSENTS AND APPROVALS.** Except as otherwise expressly provided in this Regulatory Agreement, any consent or approval required under the Regulatory Agreement shall not be unreasonably withheld or delayed.

45. **NOTICES, DEMANDS, AND COMMUNICATIONS.** Formal notices, demands, and communications between DEVELOPER and the CITY shall be given by registered or certified mail, return receipt requested, postage prepaid or delivered personally, to DEVELOPER and the CITY as follows, or at such other address as a party may designate by written notice to the other party:

CITY OF ROSEVILLE

Economic Development Director
City of Roseville
311 Vernon Street
Roseville, CA 95678

DEVELOPER

Koroni, LLC
3007 Douglas Blvd.
Suite 170
Roseville, CA 95661

with a copy to:

Greek Orthodox Housing Corporation
4120 Douglas Blvd.
#306-511
Granite Bay, CA 95746

46. **BINDING UPON SUCCESSORS.** All provisions of this Regulatory Agreement shall be binding upon and inure to the benefit of the heirs, administrators, executors, successors in interest, transferees, and assigns of DEVELOPER and the CITY, and shall run with the land for the full term of this Regulatory Agreement, regardless of any assignment, payment, prepayment, expiration, extinguishment of the Loan or Notes, any reconveyance of the Deeds of Trust, or any conveyance or transfer of the Property. Any successor in interest to DEVELOPER and any purchaser or transferee of the Property shall be subject to all of the duties and obligations imposed on DEVELOPER under this Regulatory Agreement for the full term of this Regulatory Agreement. The term "DEVELOPER" as used in this Regulatory Agreement shall include all such assigns, successors-in-interest, and transferees.

47. **RELATIONSHIP OF PARTIES.** The relationship of DEVELOPER and the CITY for this Project during the term of this Regulatory Agreement shall not be construed as a joint venture, equity venture, or partnership. The CITY neither undertakes nor assumes any responsibility or duty to DEVELOPER or to any third party with respect to the operation of the Property or the actions of DEVELOPER. Except as the CITY may specify in writing, DEVELOPER shall have no authority to act as an agent of the CITY or to bind the CITY to any obligation.

DRAFT

48. **WAIVER.** Any waiver by the CITY of any obligation in this Regulatory Agreement must be in writing. No waiver shall be implied from any delay or failure by the CITY to take action on any breach or default of DEVELOPER or to pursue any remedy allowed under this Regulatory Agreement or applicable law. Any extension of time granted to DEVELOPER to perform any obligation under this Regulatory Agreement shall not operate as a waiver or release from any of its obligations under this Regulatory Agreement. Consent by the CITY to any act or omission by DEVELOPER shall not be construed as the consent to any other or subsequent act or omission or to waive the requirement for the CITY's written consent to future waivers.

49. **OTHER AGREEMENTS.** DEVELOPER represents that it has not entered into any agreements that would restrict or compromise its ability to comply with the terms of this Regulatory Agreement. DEVELOPER shall not enter into any agreements that are inconsistent with the terms of this Regulatory Agreement without an express written waiver by the CITY.

50. **AMENDMENTS AND MODIFICATIONS.** Any amendments or modifications to this Regulatory Agreement must be in writing, and shall be effective only if executed by both DEVELOPER and the CITY, following receipt of all required approvals, and only with the consent of the Senior Lenders.

51. **SEVERABILITY.** Every provision of this Regulatory Agreement is intended to be severable. If any provision of this Regulatory Agreement is held invalid, illegal, or unenforceable by a court of competent jurisdiction, the validity, legality, and enforceability of the remaining provisions shall not be affected or impaired.

SPECIAL PROVISIONS

52. **ADMINISTRATIVE FEE.** In the event of DEVELOPER's breach or violation of any agreement, obligation or warranty under the Regulatory Agreement that is uncured within the cure periods provided herein, or in the event the Property is transferred in violation of this Regulatory Agreement, DEVELOPER shall pay annually, not later than April 15 of each year, a $10,000 fee ("Administrative Fee") until the breach is cured. The CITY shall provide the DEVELOPER with notice and the right to cure, as set forth in above, any event which the CITY believes give rise to an obligation to pay the Administrative Fee. Such fee shall remain in effect during any period of breach or violation. The payment of such Administrative Fee shall be in addition to, and not to the exclusion of, the CITY's other remedies contemplated in this Regulatory Agreement; provided however that this provision shall be subject to the nonrecourse provisions set forth in the Notes.

53. **REFINANCING/RESYNDICATION REVIEW FEE.** In the event that the Property and/or the Project is a tax credit project and is refinanced or resyndicated during the term of this Regulatory Agreement, DEVELOPER shall provide the CITY a prepayment in amount to be determined by the CITY, upon request by DEVELOPER, for CITY's staff actual and documented costs in reviewing any refinancing or resyndication documentation submitted to the CITY for the CITY's review and approval. Such prepayment shall be submitted by DEVELOPER prior to the CITY commencing any review and shall not exceed five thousand dollars ($5,000.00). DEVELOPER shall not be entitled to receive a refund of any such fee in the event that DEVELOPER fails to complete such refinancing or resyndication.

54. **TENANT MONITORING FEE.** Commencing one (1) year after the date of the final Certificate of Occupancy for the Project and annually thereafter, DEVELOPER shall pay to the CITY, not later than March 31 of each year, a tenant monitoring fee equal to FORTY

DRAFT

DOLLARS ($40) for each occupied, rent restricted, apartment unit within the Project. penalty of ten percent (10%) per month shall be assessed against any fee not paid when due.

55. **PARTICIPATION IN HOUSING CHOICE VOUCHER PROGRAM.** DEVELOPER agrees to accept tenants who qualify under the Housing Choice Voucher ("HCV") program administered by the Roseville Housing Authority (the "Authority") or its successor.

56. **CHECKLIST FOR REGULATED UNITS.** DEVELOPER agrees that each prospective tenant, prior to rental of a Regulated Unit, shall be required to complete forms required by **Exhibit C**, or DEVELOPER's equivalent as approved in writing by the CITY.

[Signatures Next Page]

IN WITNESS WHEREOF, the City of Roseville, a municipal corporation, has authorized the execution of this Regulatory Agreement in duplicate by its City Manager and attested to by its City Clerk under the authority of Resolution No._____, adopted by the Council of the City of Roseville on the___day of_____, 2024, and DEVELOPER has caused this Regulatory Agreement to be executed.

CITY OF ROSEVILLE, a municipal corporation:

BY:_____
DOMINICK CASEY
City Manager

ATTEST:

BY:_____
CARMEN AVALOS
City Clerk

APPROVED AS TO FORM:

BY:_____
MICHELLE SHEIDENBERGER
City Attorney

APPROVED AS TO SUBSTANCE:

BY: _____
MELISSA ANGUIANO
Economic Development Director

GREEK ORTHODOX HOUSING CORPORATION, a California nonprofit corporation:

BY: _____
NAME
Title

and

BY: _____
NAME
Title

EXHIBIT A

LEGAL DESCRIPTION OF PROPERTY

The land described herein is situated in the State of California, County of Placer, City of Roseville, and is described as follows:

EXHIBIT B
UNIT CONFIGURATION AND INITIAL RENT RESTRICTIONS

Maximum Household Income 30% AMI

Bedroom size	Number of Units	Gross Rent	Less TCAC approved CUAC*	Allowable Contract Rent
1		$	$	**$**
2		$	$	**$**
3		$	$	**$**

Maximum Household Income 40% AMI

Bedroom size	Number of Units	Gross Rent	Less TCAC approved CUAC*	Allowable Contract Rent
1		$	$	**$**
2		$	$	**$**
3		$	$	**$**

Maximum Household Income 50% AMI

Bedroom size	Number of Units	Gross Rent	Less TCAC approved CUAC*	Allowable Contract Rent
1		$	$	**$**
2		$	$	**$**
3		$	$	**$**

Maximum Household Income 60% AMI

Bedroom size	Number of Units	Gross Rent	Less TCAC approved CUAC*	Allowable Contract Rent
1		$	$	**$**
2		$	$	**$**
3		$	$	**$**

* California Utility Allowance Calculator (CUAC) is California's energy consumption model for calculating utility allowance estimates. These estimates are approved by California's Tax Credit Allocation Committee (TCAC) and are limited to new construction projects in the design phase.

DRAFT

EXHIBIT C

CHECKLIST FOR AFFORDABLE RENTAL UNITS

The following documentation must be present in the Tenant's file (in a form approved by the Housing Manager) for an "affordable renter."

____ Certification of Affordable Rental Unit Eligibility

____ Calculation of Tenant Eligibility Form

____ Record of Rental Increases

____ Written, third party verification of all income sources, including:

- ____ Employment
- ____ Self-employment (tax return and profit & loss statement for current year)
- ____ Unemployment
- ____ AFDC (Welfare) Benefits
- ____ Child Support
- ____ Alimony
- ____ Social Security Benefits
- ____ Supplemental Security Income (SSK)
- ____ VA or Military Benefits
- ____ Pensions and/or Annuities
- ____ Retirement Funds
- ____ Savings Accounts (Interest Income)
- ____ Checking Accounts
- ____ Government Grants
- ____ Trust Funds
- ____ Stocks & Bonds (Cash Value)
- ____ Life Insurance (Cash Value)

DRAFT

Name_____ **Complex**

_____

Title_____ **Date**

_____

DRAFT

CERTIFICATION OF AFFORDABLE RENTAL UNIT ELIGIBILITY

Re: _____ Apt. # _____
Apartment Complex

I/we have read and answered truthfully, fully frankly and personally each of the following questions for all persons who are to occupy the unit being applied for in the above apartment project. Listed below are the names of all persons who intend to reside in the unit:

1) Name of Members of the Household	2) Relationship to head of Household	3) Age	4) Social Security No.	5) Place of Employment

DRAFT

CERTIFICATION OF AFFORDABLE RENTAL UNIT ELIGIBILITY (CONT.)
INCOME COMPUTATION

6) The total anticipated income calculated in accordance with this paragraph 6, of all persons (except children under the age of 18 years) listed above for the 12-month period beginning the date that I/we plan to move into a unit is $_____.

Included in the total anticipated income listed above are:

a. All wages and salaries, overtime pay, commissions, fees and other compensation for personal services, before payroll deductions.

Excluded from such anticipated income are:

a. Casual, sporadic or irregular gifts;

b. Amounts which are specifically for or in reimbursement of medical expenses;

c. Lump sum additions to family assets, such as inheritances, insurance payments (including payments under health and accident insurance and worker's compensation), capital gains and settlements for personal or property losses;

d. Amounts of educational scholarships paid directly to the student or the educational institution and amounts paid by the government to a veteran for use in meeting the costs of tuition, fees, books, and equipment. Any amounts of such scholarships or payments to veterans not used for the above purposes are to be included in income;

e. Hazardous duty pay to a family member in the Armed Forces who is away from home and exposed to hostile fire;

f. Relocation payments under Title II of the Uniform Relocation Assistance and Real Property Acquisition Policies Act of 1970;

g. Foster child care payments;

h. The value of coupon allotments for the purchase of food pursuant to the Food Stamp Act of 1977.

7) This certificate is made with the knowledge that it will be relied upon by the Owner to determine maximum income for eligibility to occupy the unit; and I/we declare that all information set forth herein is true, correct and complete and based upon information I/we deem reliable and that the statement of total anticipated income contained in paragraph 6 is reasonable and based upon such investigation as the undersigned deemed necessary.

DRAFT

8) I/We will assist the Owner in obtaining any information or documents required to verify the statement made herein, including either an income verification from my/our present employer(s) or copies of federal tax returns for the immediately preceding calendar year.

9) I/We acknowledge that I/we have been advised that the making of any misrepresentation or misstatement in this declaration will constitute a material breach of my/our agreement with the Owner to lease the unit and will entitle the Owner to prevent or terminate my/our occupancy of the unit by institution of an action for eviction or other appropriate proceedings.

I/We declare under penalty of perjury that the foregoing is true and correct.

Executed this_____day of_____in the City of _____ California.

_____
Applicant

_____
Applicant

_____
Applicant

_____
Applicant

_____
Applicant

[All persons listed in number 2 above, except children under the age of 18 must sign this form]

DRAFT

CALCULATION OF TENANT ELIGIBILITY FORM

(FORM COMPLETION BY APARTMENT OWNER OR AGENT)

NAME:_____ UNIT # _____

SOURCE		**MONTHLY**		**ANNUAL**
Social Security		$_____		$ _____
Social Security		$_____		$ _____
Civil Service		$_____		$ _____
Pension_____	$____	$_____	Interest_____	
	$____	$_____	Wages_____	
_____	$____	$_____	Tips_____	
_____	$____	$_____	Wages_____	
_____	$____	$_____	Tips_____	
_____	$____	$_____		
Child Support		$_____		$ _____
Welfare		$_____		$ _____
Stocks/Bonds		$_____		$ _____
Other_____		$_____		$ _____
Other _____		$_____		$ _____
TOTAL INCOME		**$**_____		**$** _____
		Monthly base rent		$_____
		Move-in date		_____

BY

TITLE_____

DATE _____

DRAFT

AFFORDABLE TENANT
RECORD OF RENTAL INCREASES

(FORM COMPLETION BY APARTMENT OWNER OR AGENT)

NAME_____ APT. NO. _____

MOVE-IN DATE_____ INITIAL BASE RENT $_____

ANNUAL INCOME $_____

DATE OF INCREASE	CURRENT RENT		ANNUAL ADJUSTMENT FACTORS		NEW RENT
_____	$_____	X	1._____	=	$_____
_____	$_____	X	1._____	=	$_____
_____	$_____	X	1._____	=	$_____
_____	$_____	X	1._____	=	$_____
_____	$_____	X	1._____	=	$_____
_____	$_____	X	1._____	=	$_____
_____	$_____	X	1._____	=	$_____
_____	$_____	X	1._____	=	$_____
_____	$_____	X	1._____	=	$_____
_____	$_____	X	1._____	=	$_____
_____	$_____	X	1._____	=	$_____
_____	$_____	X	1._____	=	$_____
_____	$_____	X	1._____	=	$_____
_____	$_____	X	1._____	=	$_____
_____	$_____	X	1._____	=	$_____
_____	$_____	X	1._____	=	$_____

DRAFT

AFFORDABLE TENANT
RECORD OF RENTAL INCREASES (For Tax Credit Projects Only)

(FOR COMPLETION BY APARTMENT DEVELOPER OR AGENT)

NAME:_____ APT. #_____

MOVE-IN DATE: _____

ANNUAL INCOME: _____

INITIAL BASE RENT: _____

DATE OF INCREASE	CURRENT RENT	NEW RENT

DRAFT

ACKNOWLEDGMENTS

State of California

County of _____

On_____before me,_____,
(here insert name and title of the officer)
personally appeared_____, who proved to me on the basis of satisfactory evidence to be the person(s) whose name(s) is/are subscribed to the within instrument and acknowledged to me that he/she/they executed the same in his/her/their authorized capacity(ies), and that by his/her/their signature(s) on the instrument the person(s), or the entity upon behalf of which the person(s) acted, executed the instrument.

I certify under PENALTY OF PERJURY under the laws of the State of California that the foregoing paragraph is true and correct.

WITNESS my hand and official seal.

Signature _____

(Seal)

ACKNOWLEDGMENTS

State of California

County of _____

On_____before me,_____,
(here insert name and title of the officer)
personally appeared_____, who proved to me on the basis of satisfactory evidence to be the person(s) whose name(s) is/are subscribed to the within instrument and acknowledged to me that he/she/they executed the same in his/her/their authorized capacity(ies), and that by his/her/their signature(s) on the instrument the person(s), or the entity upon behalf of which the person(s) acted, executed the instrument.

I certify under PENALTY OF PERJURY under the laws of the State of California that the foregoing paragraph is true and correct.

WITNESS my hand and official seal.

DRAFT

Signature _____

(Seal)

DRAFT

ORDINANCE NO. 6853

ORDINANCE OF THE COUNCIL OF THE CITY OF ROSEVILLE AUTHORIZING CERTAIN AMENDMENTS TO THE FISCAL YEAR 2024-25 BUDGET AND DECLARING THIS ORDINANCE TO BE IMMEDIATELY EFFECTIVE AS AN APPROPRIATION MEASURE

THE CITY OF ROSEVILLE ORDAINS:

SECTION 1. The City of Roseville Annual Budget, Fiscal Year 2024-25, is hereby amended as listed on the attached budget adjustment for the Sierra Vista Parcel Acquisition project for affordable housing development.

SECTION 2. This ordinance is hereby declared to be an appropriation measure, immediately effective pursuant to the provisions of Section 5.03 of the Charter.

SECTION 3. The City Clerk is hereby authorized and directed to post a true copy of the foregoing ordinance in each of three (3) conspicuous locations in the City and she shall immediately after such posting enter in the ordinance book, under the record of the ordinance, a certificate under her hand stating the time and place of such publication by posting.

PASSED AND ADOPTED by the Council of the City of Roseville, this _____day of_____, 2024, by the following vote on roll call:

AYES COUNCILMEMBERS:

NOES COUNCILMEMBERS:

ABSENT COUNCILMEMBERS:

_____
MAYOR

ATTEST:

_____
City Clerk

REQUEST FOR BUDGET ADJUSTMENT

Updated 5/24/2024

REQUESTER NAME & TITLE:	Claudia Carreno Management Analyst	FISCAL YEAR:	2024-25
PREPARER NAME & TITLE:	Claudia Carreno Management Analyst	COUNCIL DATE (if applicable):	08/21/24
DEPARTMENT/DIVISION:	Economic Development - Housing	ORDINANCE:	

EXPENDITURES/EXPENSES/TRANSFERS OUT

ACCOUNT STRING				BUDGET ($)	DESCRIPTION
Fund	Account	Center	Project	Adjustment	
2201	5573	54101		571,850	Increase CDBG Grants Deferred Loans Affordable Housing Development
EXPENDITURES/EXPENSES/TRANSFERS OUT TOTAL				571,850	

REVENUES/TRANSFERS IN

ACCOUNT STRING				BUDGET ($)	DESCRIPTION
Fund	Account	Center	Project	Adjustment	
2201	4401	54101		571,850	Increase CDBG Federal Grants Revenue for Affordable Housing Development
REVENUES/TRANSFERS IN TOTAL				571,850	

NET ADJUSTMENT	-	

FUND BALANCE

ACCOUNT STRING				BUDGET ($)	DESCRIPTION
Fund	Account	Center	Project	Adjustment	
	3601	00000	000000		
	3601	00000	000000		
	3601	00000	000000		
	3601	00000	000000		
	3601	00000	000000		
	3601	00000	000000		
FUND BALANCE TOTAL				-	

Justification for Budget Adjustment:

Staff recommends this budget adjustment to increase the Grants Deferred Loans expenditure budget in the Community Development Block Grant (CDBG) fund by $571,850 to fund the Sierra Vista Parcel Acquisition for an affordable housing development. This budget adjustment will increase the existing Grants Deferred Loans budget of $350,000 to $921,850. This budget adjustment will also increase Federal Grants CDBG revenue by $571,850 which will increase the existing revenue budget of $700,000 to $1,271,850 funded by CDBG carryover grants from prior years (2020, 2021, 2022, and 2023).

COUNCIL COMMUNICATION

CC #: 3504
File #: 0114

Title:	State Ballot Measure - Proposition 36: The Drug and Theft Crime Penalties and Treatment-Mandated Felonies Initiative
Contact:	Mark Wolinski 916-774-5179 mwolinski@roseville.ca.us

Meeting Date: 8/21/2024
Item #: 8.1.

RECOMMENDATION TO COUNCIL

Staff requests the City Council's consideration to adopt a resolution in support of Proposition 36– The Drug and Theft Crime Penalties and Treatment-Mandated Felonies Initiative.

BACKGROUND

Californians statewide will be asked to vote on Proposition 36 – The Drug and Theft Crime Penalties and Treatment-Mandated Felonies Initiative as an initiated state statute on November 5, 2024.

The bipartisan measure is focused on improving safety in every community and neighborhood in California. It focuses narrowly on accountability measures for repeat offenders of theft and drug traffickers of serious drugs like fentanyl, while incentivizing and encouraging more individuals to participate in and complete drug treatment programs. The measure creates a deterrent for repeat offenders and redirects addicts towards treatment rather than incarceration.

The initiative has garnered support from small business owners, victims of fentanyl, social justice leaders, community organizations, and elected officials, and aims to address the rising issues of drug addiction and theft exacerbated by the 2014 voter-backed initiative Prop. 47, which lowered penalties for these crimes. Prop. 47 more than doubled the amount a person could steal before facing a felony charge from $400 to $950, by requiring that thefts under $950 be charged as misdemeanors.

Proposition 36 would increase penalties for crimes where money or property worth $950 or less is stolen. The initiative would make the crime punishable as a felony for individuals who have two or more prior theft-related convictions. The initiative would make the punishment up to three years in jail or prison depending on their criminal history. Currently, it is punishable by up to six months in jail. The initiative would also increase sentences based on the amount of property stolen.

The initiative introduces "treatment-mandated felonies," which combine judicial discretion with

mandatory treatment programs to effectively curb the cycle of drug use and criminal behavior.

Key Proposals of Prop 36:
• Drug and Mental Health Treatment: This proposal mandates treatment for drug addiction with enforceable legal consequences for non-compliance, aiming to support recovery.
• Tougher Laws on Drug Dealing: It proposes increased penalties for drug dealers, especially those involved with fentanyl and other hard drugs, with provisions for murder charges if trafficking leads to death.
• Revising Theft Penalties: The initiative seeks to reintroduce harsher penalties for repeat theft offenses, target "smash and grab" crimes, and allow for the aggregation of theft values to elevate charges to felonies.

The initiative would also increase penalties for certain drug crimes by increasing sentence lengths and level of crime. The initiative would add fentanyl to the list of drugs (cocaine, heroin, and methamphetamine) that would warrant a felony charge if an individual possessed one of the listed drugs and a loaded firearm. The punishment for this crime is up to four years in prison. Currently, possessing fentanyl and a loaded firearm is punishable by up to one year in jail.

Furthermore, the initiative would increase sentences based on the quantity of certain drugs sold illegally. The initiative would require individuals who receive increased sentences because of this to serve their entire sentence in state prison instead of county jail regardless of their criminal history.

In addition, the proposed ballot measure will:
• Hold those who are committing repeated retail theft and fentanyl sales crimes accountable, for the safety and health of our communities.
• Create accountability for repeat smash and grab offenders who are driving up costs for all Californians and chasing retailers out of the state.
• Bring back incentives and accountability that are needed for individuals to get into necessary drug treatment and job training programs — helping them begin new lives. Currently those arrested multiple times for hard drug use currently have no incentive to choose treatment, with no consequences.

A "yes" vote supports making changes to Proposition 47 approved in 2014, including:
• Classifying certain drug offenses as treatment-mandated felonies.
• Increasing penalties for certain drug crimes by increasing sentence lengths and level of crime.
• Requiring courts to warn individuals convicted of distributing illegal drugs of their potential future criminal liability if they distribute deadly drugs like fentanyl, heroin, cocaine, and methamphetamine; and
• Increasing sentences for theft based on the value of the property stolen.

A "no" vote opposes this initiative that makes changes to Proposition 47 (2014), thereby maintaining the status quo with certain drug and theft crimes as misdemeanors.

<u>Conclusion</u>
This measure would amend state laws to (1) create a new court process for certain drug possession crimes, (2) require a warning of future criminal liability for people convicted of drug distribution, (3) increase penalties for certain drug crimes, and (4) increase penalties for certain theft crimes. Some of these changes would undo certain reductions in punishment enacted by

Proposition 47. Ultimately the measure would make changes to current laws when it comes to addressing rampant retail theft or the growing epidemic of fentanyl overdoses.

FISCAL IMPACT

The costs of these activities are contained within the City's current budget.

ENVIRONMENTAL REVIEW

The California Environmental Quality Act (CEQA) does not apply to activities that will not result in a direct or reasonably foreseeable indirect physical change in the environment, or is otherwise not considered a project as defined by CEQA Statute §21065 and CEQA State Guidelines §15060(c)(3) and §15378. The action of reviewing legislation meets the above criteria and is not subject to CEQA. No additional environmental review is required.

CITY COUNCIL STRATEGIC PLAN/OVERARCHING GOALS

Goal B - Support community engagement and advocacy
Goal C - Maintain a safe and healthy community

Respectfully Submitted,

Mark Wolinski, Government Relations Administrator

Megan MacPherson Scheid, Deputy City Manager, Public Affairs and Communications Director

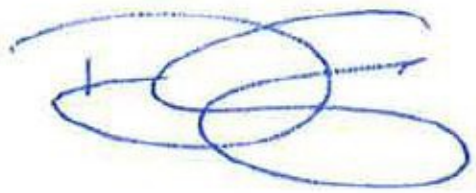

_____
Dominick Casey, City Manager

ATTACHMENTS:

Description

Resolution 24-301

Proposition 36: Drug Addiction Theft Reform

RESOLUTION NO. 24-301

SUPPORTING STATE BALLOT MEASURE PROPOSITION 36 – THE DRUG AND THEFT CRIME PENALTIES AND TREATMENT-MANDATED FELONIES

WHEREAS, Californians statewide will be asked to vote on Proposition 36 – The Drug and Theft Crime Penalties and Treatment-Mandated Felonies Initiative as an initiated state statute on November 5, 2024; and

WHEREAS, the bipartisan measure is focused on improving safety in every community and neighborhood in California and focuses narrowly on accountability measures for repeat offenders of theft and drug traffickers of serious drugs like fentanyl, while incentivizing and encouraging more individuals to participate in and complete drug treatment programs; and

WHEREAS, the initiative has garnered support from small business owners, victims of fentanyl, social justice leaders, community organizations, and elected officials, and aims to address the rising issues of drug addiction and theft; and

WHEREAS, Proposition 36 would increase penalties for crimes where money or property worth $950 or less is stolen and would also increase sentences based on the amount of property stolen; and

WHEREAS, the initiative would also increase penalties for certain drug crimes by increasing sentence lengths and level of crime; and

WHEREAS, in addition, the proposed ballot measure will:

- Hold those who are committing repeated retail theft and fentanyl sales crimes accountable, for the safety and health of our communities.
- Create accountability for repeat smash and grab offenders who are driving up costs for all Californians and chasing retailers out of the state.
- Bring back incentives and accountability that are needed for individuals to get into necessary drug treatment and job training programs — helping them begin new lives.

WHEREAS, this measure would amend state laws to (1) create a new court process for certain drug possession crimes, (2) require a warning of future criminal liability for people convicted of drug distribution, (3) increase penalties for certain drug crimes, and (4) increase penalties for certain theft crimes.

NOW, THEREFORE, BE IT RESOLVED by the City Council of the City of Roseville that the City of Roseville is in support of Proposition 36 – The Drug and Theft Crime Penalties and Treatment-Mandated Felonies.

PASSED AND ADOPTED by the Council of the City of Roseville this_____day of _____, 20_, by the following vote on roll call:

AYES COUNCILMEMBERS:

NOES COUNCILMEMBERS:

ABSENT COUNCILMEMBERS:

_____
MAYOR

ATTEST:

_____
City Clerk

THE HOMELESSNESS, DRUG ADDICTION, AND THEFT REDUCTION ACT

SECTION 1. Title

This Act shall be known as The Homelessness, Drug Addiction, and Theft Reduction Act.

SECTION 2. Purposes and Intent

This measure will reform laws that have dramatically increased homelessness, drug addiction, and theft throughout California.

This measure will:

A. Provide drug and mental health treatment for people who are addicted to hard drugs such as fentanyl, cocaine, heroin, and methamphetamine.

B. Add fentanyl to existing laws that prohibit the possession of hard drugs while armed with a loaded firearm.

C. Add fentanyl to existing laws that prohibit the trafficking of large quantities of hard drugs.

D. Permit judges to use their discretion to sentence drug dealers to state prison instead of county jail when they are convicted of trafficking hard drugs in large quantities or are armed with a firearm while engaging in drug trafficking.

E. Warn convicted hard drug dealers and manufacturers that they can be charged with murder if they continue to traffic in hard drugs and someone dies as a result.

F. Reinstate penalties for hard drug dealers whose trafficking kills or seriously injures a drug user.

G. Increase penalties for people who repeatedly engage in theft.

H. Add new laws to address the increasing problem of "smash and grab" thefts that result in significant losses and damage, or that are committed by multiple thieves working together.

SECTION 3. Findings and Declarations

The People of the State of California find and declare as follows:

A. Reducing Homelessness Through Drug and Mental Health Treatment

1. California has reached a tipping point in its homelessness, drug, mental health, and theft crises. Our state has the highest rate of homelessness per capita of any state in the country. And drug overdoses now kill two to three times the number of people in California as car accidents.

2. Since the passage of Proposition 47 in 2014, homelessness in California has increased by 51%, while during the same time period in the rest of the country, it has declined by 11%. Proposition 47 reduced the legal consequences of both possession of hard drugs (fentanyl, cocaine, heroin, methamphetamine, and phencyclidine), and theft. The result has been massive increases in drug addiction, mental illness, and property crimes, including retail theft, committed by addicts to support their addiction. At the same time, California has seen a dramatic decrease in mental health and drug treatment for homeless people due to reduced incentives to participate in treatment. Our homelessness problem is directly connected to these unintended consequences of Proposition 47, which the voters now desire to correct.

3. Progressive states such as New Jersey, Maryland, Illinois, and Michigan have significantly stronger hard drug laws than California, and their homeless rate is 4 to 5 times lower than California's.

4. This proposal takes a modest step in the direction of these states by enacting a new class of crime called a "treatment-mandated felony." Under this new "treatment-mandated felony," prosecutors would have the discretion to charge a felony for hard drug possession after two previous drug convictions. If charged with this "treatment-mandated felony" for a third or subsequent drug offense, the offender would be given the option of participating in drug and mental health treatment. If the offender successfully completes drug and mental health treatment, the charge would be fully expunged, and the offender would receive no jail time. If the offender refuses drug and mental health treatment, they would serve jail time for hard drug possession. For a second conviction of the treatment-mandated felony (the 4th total conviction for hard drug possession), a judge would have the option of imposing time in jail or state prison. Along with hard drug and mental health treatment, offenders charged with a treatment-mandated felony would be offered shelter, job training, and other services designed to break the cycle of addiction and homelessness.

B. Cracking Down on Hard Drug Dealers

1. Fentanyl is the most dangerous drug that our nation has ever seen. Because it is largely produced synthetically, fentanyl is typically cheaper than other hard drugs. As a result, drug dealers now regularly include fentanyl in other drugs such as diet, anxiety, and

sleeping pills, cocaine, and heroin. Further, fentanyl is up to 50 times stronger than heroin. Therefore, a very tiny amount of fentanyl can prove deadly. One kilogram (2.2 pounds) of fentanyl provides enough of the drug to manufacture four to ten million doses, or enough to kill 500,000 people. Finally, because such a small amount of fentanyl is necessary to create addiction, it is easier to smuggle across the border in smaller, yet much more deadly quantities.

2. This Act would authorize greater consequences for hard drug dealers whose trafficking kills or seriously injures a person who uses those drugs, and it would provide a mechanism to warn convicted hard drug dealers and manufacturers that they can be charged with murder if they continue to traffic in hard drugs and someone dies as a result.

3. This Act would add non-prescription fentanyl to an existing list of hard drugs such as heroin, cocaine, and methamphetamine, for which it is illegal to possess the drug while armed with a loaded firearm.

4. This Act would also add non-prescription fentanyl to an existing list of hard drugs such as heroin, cocaine, and methamphetamine that authorizes greater consequences for drug dealers who sell large quantities of hard drugs.

5. This Act also permits judges to sentence drug dealers who traffic in large quantities of hard drugs or who are armed with a firearm while trafficking in hard drugs to state prison instead of local county jails. Only our state prisons are equipped to manage security for hardened drug dealers and to provide them the rehabilitation services they need to safely re-enter society.

C. Accountability for Repeat Theft and Smash and Grab Thefts

1. Prior to Proposition 47, individuals who repeatedly engaged in theft could be charged with a felony. Prop 47 eliminated this repeat offender felony and instead provided that any theft up to $950 in value is now a misdemeanor – regardless of how many times the offender has committed theft. In practice, this means that an offender who repeatedly steals up to $950 in value faces virtually no legal consequences.

2. The result has been an explosion in retail and cargo theft causing stores throughout California to close to protect employees and customers from criminal activity that disrupts the efficient delivery of products directly to consumers and creates billions of dollars in economic losses to our local communities and state. This rapid increase in retail and cargo theft has also contributed to rising inflation, as businesses have been forced to raise prices to account for their economic losses. This retail and cargo theft explosion has collided with the fentanyl epidemic, as hard drug users have engaged in brazen theft to support their drug habits, knowing that there will be no consequences for either their theft or their hard drug use.

3. Under this Act, an offender with two prior convictions for theft can be charged with a felony, regardless of the value of the stolen property. Diversion programs will continue to

exist, meaning that judges will retain discretion not to incarcerate an offender even for more than two theft convictions. But prosecutors will have the ability to bring felony charges against hardened, repeat offenders who continue to engage in theft. Judges will have the discretion to sentence a repeat offender to jail in appropriate cases, or to state prison if an offender is convicted four or more times of theft.

4. This Act also authorizes judges to exercise their discretion to impose an enhanced penalty when an offender steals, damages, or destroys property by acting together with two or more offenders or by causing losses of $50,000 or more. By permitting discretion in these scenarios, judges will be able to fashion sentences that are appropriate for the crime committed, including so-called "smash and grabs" committed by mobs or large groups of people working together.

5. The value of property stolen in multiple thefts will be permitted to be added together so that in appropriate cases an offender may be charged with felony theft instead of petty theft. This provision addresses the problem of offenders who commit a series of thefts in which the property stolen during each theft has a value under the $950 felony theft threshold, in order to insulate themselves from felony charges.

6. Along with the hard drug provisions in this Act, these theft law changes will stop the vicious cycle of hard drug users stealing to support their habits without legal consequences for their actions.

SECTION 4. Section 11369 is added to the Health & Safety Code to read:

11369. (a) This section shall be known, and may be cited, as Alexandra's Law.

(b) The court shall advise a person who is convicted of, or who pleads guilty or no contest to, a violation of Section 11351, 11351.5, 11352, 11378, 11378.5, 11379, 11379.5, or 11379.6 involving a hard drug, of the following:

"You are hereby advised that it is extremely dangerous and deadly to human life to illicitly manufacture, distribute, sell, furnish, administer, or give away any drugs in any form, including real or counterfeit drugs or pills. You can kill someone by engaging in such conduct. All drugs and counterfeit pills are dangerous to human life. These substances alone, or mixed, kill human beings in very small doses. If you illicitly manufacture, distribute, sell, furnish administer, or give away any real or counterfeit drugs or pills, and that conduct results in the death of a human being, you could be charged with homicide, up to and including the crime of murder, within the meaning of Section 187 of the Penal Code."

(c) The advisory statement shall be provided to the defendant in writing, either on a plea form if used, as an addendum to a plea form, or at sentencing, and the fact that the advisory was given shall be specified on the record and recorded in the abstract of the conviction.

(d) (1) Except as provided in paragraph (2), as used in this section, "hard drug" means a substance listed in Sections 11054 or 11055, including a substance containing fentanyl, heroin, cocaine, cocaine base, methamphetamine, or phencyclidine, and the analogs of any of these substances as defined in Sections 11400 and 11401.

(2) As used in this section "hard drug" does not include cannabis, cannabis products, peyote, lysergic acid diethylamide (LSD) or other psychedelic drugs such as mescaline and psilocybin (mushrooms), or any other substance listed in subdivisions (d) and (e) of Section 11054, or, with the exception of methamphetamine, any other substance listed in subdivision (d) of Section 11055.

SECTION 5. Section 11370.1 of the Health & Safety Code is amended to read:

11370.1. (a) Notwithstanding Section 11350 or 11377 or any other provision of law, every person who unlawfully possesses any amount of a substance containing cocaine base, a substance containing cocaine, a substance containing heroin, a substance containing methamphetamine, *a substance containing fentanyl, a* crystalline substance containing phencyclidine, a liquid substance containing phencyclidine, plant material containing phencyclidine, or a hand-rolled cigarette treated with phencyclidine while armed with a loaded, operable firearm is guilty of a felony punishable by imprisonment in the state prison for two, three, or four years.

(b) Subdivision (a) does not apply to any person lawfully possessing fentanyl, including with a valid prescription.

(c) As used in ~~this~~ subdivision *(a),* "armed with" means having available for immediate offensive or defensive use.

~~(b)~~ *(d)* Any person who is convicted under this section shall be ineligible for diversion or deferred entry of judgment under Chapter 2.5 (commencing with Section 1000) of Title 6 of Part 2 of the Penal Code.

SECTION 6. Section 11370.4 of the Health & Safety Code is amended to read:

11370.4. (a) ~~Any~~ *(1) A* person convicted of a violation of, or of a conspiracy to violate, Section 11351, 11351.5, or 11352 with respect to a substance containing heroin, cocaine base as specified in paragraph (1) of subdivision (f) of Section 11054, or cocaine as specified in paragraph (6) of subdivision (b) of Section 11055 shall receive an additional *state prison* term as follows:

~~(1)Where~~

(A) If the substance exceeds one kilogram by weight, the person shall receive an additional term of three years.

~~(2)Where~~

(B) If the substance exceeds four kilograms by weight, the person shall receive an additional term of five years.

~~(3)Where~~

(C) If the substance exceeds 10 kilograms by weight, the person shall receive an additional term of 10 years.

~~(4)Where~~

(D) If the substance exceeds 20 kilograms by weight, the person shall receive an additional term of 15 years.

~~(5)Where~~

(E) If the substance exceeds 40 kilograms by weight, the person shall receive an additional term of 20 years.

~~(6)Where~~

(F) If the substance exceeds 80 kilograms by weight, the person shall receive an additional term of 25 years.

(2) The conspiracy enhancements provided for in this subdivision shall not be imposed unless the trier of fact finds that the defendant conspirator was substantially involved in the planning, direction, execution, or financing of the underlying offense.

(b) ~~Any~~ *(1) A* person convicted of a violation of, or of conspiracy to violate, Section 11378, 11378.5, 11379, or 11379.5 with respect to a substance containing methamphetamine, amphetamine, phencyclidine (PCP) and its analogs shall receive an additional *state prison* term as follows:

~~(1)Where~~

(A) If the substance exceeds one kilogram by weight, or 30 liters by liquid volume, the person shall receive an additional term of three years.

~~(2)Where~~

(B) If the substance exceeds four kilograms by weight, or 100 liters by liquid volume, the person shall receive an additional term of five years.

~~(3)Where~~

(C) If the substance exceeds 10 kilograms by weight, or 200 liters by liquid volume, the person shall receive an additional term of 10 years.

~~(4)Where~~

(D) If the substance exceeds 20 kilograms by weight, or 400 liters by liquid volume, the person shall receive an additional term of 15 years.

(2) In computing the quantities involved in this subdivision, plant or vegetable material seized shall not be included.

(3) The conspiracy enhancements provided for in this subdivision shall not be imposed unless the trier of fact finds that the defendant conspirator was substantially involved in the planning, direction, execution, or financing of the underlying offense.

(c) (1) A person convicted of a violation of, or of a conspiracy to violate, Section 11351 or 11352 with respect to a substance containing fentanyl shall receive an additional state prison term as follows:

(A) If the substance exceeds 28.35 grams (one ounce) by weight, the person shall receive an additional term of three years.

(B) If the substance exceeds 100 grams by weight, the person shall receive an additional term of five years.

(C) If the substance exceeds 500 grams by weight, the person shall receive an additional term of seven years.

(D) If the substance exceeds one kilogram by weight, the person shall receive an additional term of 10 years.

(E) If the substance exceeds four kilograms by weight, the person shall receive an additional term of 13 years.

(F) If the substance exceeds 10 kilograms by weight, the person shall receive an additional term of 16 years.

(G) If the substance exceeds 20 kilograms by weight, the person shall receive an additional term of 19 years.

(H) If the substance exceeds 40 kilograms by weight, the person shall receive an additional term of 22 years.

(I) If the substance exceeds 80 kilograms by weight, the person shall receive an additional term of 25 years.

(2) The conspiracy enhancements provided for in this subdivision shall not be imposed unless the trier of fact finds that the defendant conspirator was substantially involved in the planning, direction, execution, or financing of the underlying offense.

~~(c)~~ *(d)*The additional terms provided in this section shall not be imposed unless the allegation that the weight of the substance containing heroin, *fentanyl,* cocaine base as specified in paragraph (1) of subdivision (f) of Section 11054, cocaine as specified in paragraph (6) of subdivision (b) of Section 11055, methamphetamine, amphetamine, or phencyclidine (PCP) and its analogs exceeds the amounts provided in this section is charged in the accusatory pleading and admitted or found to be true by the trier of fact.

(e)Notwithstanding paragraph (9) of subdivision (h) of Section 1170 of the Penal Code, a defendant convicted of an underlying violation specified in this section who admits an enhancement pursuant to this section or for whom an enhancement pursuant to this section is found true, is punishable by imprisonment in the state prison and not pursuant to subdivision (h) of Section 1170 of the Penal Code.

~~(d)~~ *(f)*The additional terms provided in this section shall be in addition to any other punishment provided by law.

~~(e)~~ *(g)*Notwithstanding any other ~~provision of~~ law, the court may strike the additional punishment for the enhancements provided in this section if it determines that there are circumstances in mitigation of the additional punishment and states on the record its reasons for striking the additional punishment.

SECTION 7. Article 8 (commencing with Section 11395) is added to Chapter 6 of Division 10 of the Health & Safety Code, to read:

11395. (a) This section shall be known as the "Treatment-Mandated Felony."

(b) (1) Notwithstanding any other law, and except as provided in subdivision (d), a person described in subdivision (c) who possesses a hard drug, unless upon the written prescription of a physician, dentist, podiatrist, or veterinarian licensed to practice in this state, shall be punished by imprisonment in a county jail for not more than one year or pursuant to subdivision (h) of Section 1170 of the Penal Code. A second or subsequent conviction of this section, is punishable by imprisonment in the county jail not exceeding one year or by imprisonment in the state prison.

(2) A person shall not be sentenced to jail or prison pursuant to this section unless a court determines that the person is not eligible or suitable for treatment or that any other circumstance described in paragraph (4) of subdivision (d) applies to that person.

(c) Subdivision (b) applies to a person who has two or more prior convictions for a felony or misdemeanor violation of Sections 11350, 11351, 11351.5, 11352, 11353, 11353.5, 11353.7, 11370.1, 11377, 11378, 11378.5, 11379, 11379.5, 11379.6, 11380, or 11395, including a conviction that occurred before the effective date of this section. Prior convictions shall be alleged in the accusatory pleading, and either admitted by the defendant in open court or found to be true by the trier of fact.

(d) (1)(i) In lieu of a jail or prison sentence, or a grant of probation with jail as a condition of probation, a defendant charged with a violation of this section may elect treatment by pleading guilty or no contest to a violation of this section and admitting the alleged prior convictions, waiving time for sentencing and the pronouncement of judgment, and agreeing to participate in, and complete, a detailed treatment program developed by a drug addiction expert and approved by the court. A defendant's plea of guilty or no contest shall not constitute a conviction for any purpose unless judgment is entered pursuant to paragraph (4) for a violation of this section.

(ii) Upon or subsequent to arraignment for a violation of this section, and at the request or with the consent of the defendant or their attorney, the court shall order a drug addiction expert to conduct a substance abuse and mental health evaluation of the defendant. The expert shall submit a report of the evaluation to the court and parties. The evaluation may be based on an interview of the defendant and/or other individuals with relevant knowledge and review of records the expert deems appropriate, such as medical records, criminal history, prior treatment history, and records pertaining to the current offense. If the defendant participates in the interview, neither the defendant's interview nor evidence derived from the interview may be used against the defendant at any subsequent trial for the instant offense except for the purposes of impeachment should the defendant testify inconsistently. The evaluation shall detail the defendant's drug abuse and/or mental health issues, if any, so the court and parties may better determine appropriate handling of the defendant's case.

(iii) Concurrent with the order for a substance abuse and mental health evaluation of the defendant, and with the defendant's consent, the court shall also order that a case worker or other qualified individual determine whether the defendant is eligible to receive Medi-Cal, Medicare, or any other relevant benefits for any programs or evaluations under this section. If the defendant did not previously consent to an eligibility determination at arraignment, the court shall order the eligibility determination upon and as a condition of the defendant's agreement to participate in and complete a treatment program as described in this subdivision.

(2) A treatment program may include, but is not limited to, drug treatment, mental health treatment, job training, and any other conditions related to treatment or a successful outcome for the defendant that the court finds appropriate. The court must hold regular hearings to review the progress of the defendant. The court shall make referrals to programs that provide services at no cost to the participant and have been deemed by the court, the drug addiction expert, and

the parties to be credible and effective. A defendant may also choose to pay for a program that is approved by the court.

(3) Upon the defendant's successful completion of the treatment program as specified in paragraph (2), the positive recommendation of the treatment program, and the motion of the defendant, prosecuting attorney, the court, or the probation department, the court shall dismiss this charge against the defendant and the provisions of Section 1000.4 of the Penal Code, as it read on the effective date of this section, shall apply, including the provision that the arrest upon which the defendant was deferred shall be deemed to have never occurred. A dismissal based on the successful completion of treatment shall not count as a conviction for any purpose, including for determining punishment pursuant to subdivision (b).

(4) If at any time it appears that the defendant is performing unsatisfactorily in the program, is not benefiting from treatment, is not amenable to treatment, has refused treatment, or has been convicted of a crime that was committed since starting treatment, the prosecuting attorney, the court on its own, or the probation department may make a motion for entry of judgment and sentencing. After notice to the defendant, the court shall hold a hearing to determine whether judgment should be entered and the defendant sentenced. Judgment shall be imposed and the defendant sentenced if the court finds true one or more of the foregoing circumstances. However, except when the defendant has been found to have been convicted of a crime that was committed since starting treatment, the court may re-refer the defendant to treatment if the court finds that it is in the interest of justice to do so, that the defendant is currently amenable to treatment, and if the defendant agrees to participate in, and complete, a treatment program as described in this section.

(5) For time spent in residential treatment, a defendant may earn only actual credits pursuant to Section 2900.5 of the Penal Code and shall not earn conduct credits pursuant to Section 4019 of the Penal Code or any other provision. Time spent in any other type of program or counseling is not eligible for any credits.

(e) (1) Except as provided in paragraph (2), as used in this section, "hard drug" means a substance listed in Sections 11054 or 11055, including a substance containing fentanyl, heroin, cocaine, cocaine base, methamphetamine, or phencyclidine, and the analogs of any of these substances as defined in Sections 11400 and 11401.

(2) As used in this section "hard drug" does not include cannabis, cannabis products, peyote, lysergic acid diethylamide (LSD) or other psychedelic drugs such as mescaline and psilocybin (mushrooms), or any other substance listed in subdivisions (d) and (e) of Section 11054, or, with the exception of methamphetamine, any other substance listed in subdivision (d) of Section 11055.

(f) Upon an arrest for a violation of this section, the court shall require judicial review prior to release to make an individualized determination of risk to public safety and likelihood to return to court.

(g) This section shall not be construed to preclude prosecution or punishment pursuant to any other law.

SECTION 8. Section 490.3 is added to the Penal Code to read:

490.3. Notwithstanding any other law, in any case involving one or more acts of theft or shoplifting, including but not limited to, violations of Sections 459.5, 484, 488, and 490.2, the value of property or merchandise stolen may be aggregated into a single count or charge, with the sum of the value of all property or merchandise being the values considered in determining the degree of theft.

SECTION 9. Section 666.1 is added to the Penal Code to read:

666.1. (a) (1) Notwithstanding any other law, a person who has two or more prior convictions for any of the offenses listed in paragraph (2), and who is convicted of petty theft or shoplifting, is punishable by imprisonment in the county jail not exceeding one year or pursuant to subdivision (h) of Section 1170. A second or subsequent conviction of this section is punishable by imprisonment in the county jail not exceeding one year or by imprisonment in the state prison.

(2) This section applies to the following offenses, including a conviction that occurred before the effective date of this section:

(A) Petty theft, as described in Section 488 or 490.2.

(B) Grand theft, as described in Section 487, 487h, and in Chapter 5 of Title 13 of Part 1 of the Penal Code (commencing with Section 484).

(C) Theft from an elder or dependent adult, as described in Section 368.

(D) The theft or unauthorized use of a vehicle, as described in Section 10851 of the Vehicle Code.

(E) Burglary, as described in Section 459.

(F) Carjacking, as described in Section 215.

(G) Robbery, as described in Section 211.

(H) Receiving stolen property, as described in Section 496.

(I) Shoplifting, as described in Section 459.5.

(J) Identity theft and mail theft, as described in Section 530.5.

(b) A person subject to charging under this section or actually charged with this section may be referred by a prosecuting attorney's office or by a county probation department to a theft diversion or deferred entry of judgment program pursuant to Section 1001.81. If appropriate, a person admitted to such a program may also be referred to a substance abuse treatment program.

(c) Upon an arrest for a violation of this section, the court shall require judicial review prior to release to make an individualized determination of risk to public safety and likelihood to return to court.

(d)This section shall not be construed to preclude prosecution or punishment pursuant to any other law.

SECTION 10. Section 12022 of the Penal Code is amended to read:

12022. (a) (1) Except as provided in subdivisions (c) and (d), a person who is armed with a firearm in the commission of a felony or attempted felony shall be punished by an additional and consecutive term of imprisonment pursuant to subdivision (h) of Section 1170 for one year, unless the arming is an element of that offense. This additional term shall apply to a person who is a principal in the commission of a felony or attempted felony if one or more of the principals is armed with a firearm, whether or not the person is personally armed with a firearm.

(2) Except as provided in subdivision (c), and notwithstanding subdivision (d), if the firearm is an assault weapon, as defined in Section 30510 or 30515, or a machinegun, as defined in Section 16880, or a .50 BMG rifle, as defined in Section 30530, the additional and consecutive term described in this subdivision shall be three years imprisonment pursuant to subdivision (h) of Section 1170 whether or not the arming is an element of the offense of which the person was convicted. The additional term provided in this paragraph shall apply to any person who is a principal in the commission of a felony or attempted felony if one or more of the principals is armed with an assault weapon, machinegun, or a .50 BMG rifle, whether or not the person is personally armed with an assault weapon, machinegun, or a .50 BMG rifle.

(b) (1) A person who personally uses a deadly or dangerous weapon in the commission of a felony or attempted felony shall be punished by an additional and consecutive term of imprisonment in the state prison for one year, unless use of a deadly or dangerous weapon is an element of that offense.

(2) If the person described in paragraph (1) has been convicted of carjacking or attempted carjacking, the additional term shall be in the state prison for one, two, or three years.

(3) When a person is found to have personally used a deadly or dangerous weapon in the commission of a felony or attempted felony as provided in this subdivision and the weapon is

owned by that person, the court shall order that the weapon be deemed a nuisance and disposed of in the manner provided in Sections 18000 and 18005.

(c) *(1)* Notwithstanding the enhancement set forth in subdivision (a), a person who is personally armed with a firearm in the commission of a violation or attempted violation of Section 11351, 11351.5, 11352, 11366.5, 11366.6, 11378, 11378.5, 11379, 11379.5, or 11379.6 of the Health and Safety Code shall be punished by an additional and consecutive term of imprisonment *in the state prison* ~~pursuant to subdivision (h) of Section 1170~~ for three, four, or five years.

(2) Notwithstanding paragraph (9) of subdivision (h) of Section 1170 of the Penal Code, a defendant convicted of an underlying violation specified in this subdivision who admits an enhancement pursuant to this subdivision or for whom an enhancement pursuant to this subdivision is found true, is punishable by imprisonment in the state prison and not pursuant to subdivision (h) of Section 1170 of the Penal Code.

(d) Notwithstanding the enhancement set forth in subdivision (a), a person who is not personally armed with a firearm who, knowing that another principal is personally armed with a firearm, is a principal in the commission of an offense or attempted offense specified in subdivision (c), shall be punished by an additional and consecutive term of imprisonment pursuant to subdivision (h) of Section 1170 for one, two, or three years.

(e) For purposes of imposing an enhancement under Section 1170.1, the enhancements under this section shall count as a single enhancement.

(f) Notwithstanding any other provision of law, the court may strike the additional punishment for the enhancements provided in subdivision (c) or (d) in an unusual case where the interests of justice would best be served, if the court specifies on the record and enters into the minutes the circumstances indicating that the interests of justice would best be served by that disposition.

SECTION 11. Section 12022.6 is added to the Penal Code to read:

12022.6. (a) When any person takes, damages, or destroys any property in the commission or attempted commission of a felony, or commits a felony violation of Section 496, the court shall impose a term in addition and consecutive to the punishment prescribed for the felony or attempted felony of which the defendant has been convicted, as follows:

(1) If the loss or property value exceeds fifty thousand dollars ($50,000), the court shall impose an additional term of one year.

(2) If the loss or property value exceeds two hundred thousand dollars ($200,000), the court shall impose an additional term of two years.

(3) If the loss or property value exceeds one million dollars ($1,000,000), the court shall impose an additional term of three years.

(4) If the loss or property value exceeds three million dollars ($3,000,000), the court shall impose an additional term of four years.

(5) For every additional loss or property value of three million dollars ($3,000,000), the court shall impose a term of one year in addition to the term specified in paragraph (4).

(b) In any accusatory pleading involving multiple charges of taking, damage, or destruction, or multiple violations of Section 496, the additional terms provided in this section may be imposed if the aggregate losses to the victims or aggregate property values from all felonies exceed the amounts specified in this section and arise from a common scheme or plan. All pleadings under this section shall remain subject to the rules of joinder and severance stated in Section 954.

(c) The additional terms provided in this section shall not be imposed unless the facts relating to the amounts provided in this section are charged in the accusatory pleading and admitted by the defendant or found to be true by the trier of fact.

(d) Notwithstanding any other law, the court may impose an enhancement pursuant to this section and another section on a single count, including an enhancement pursuant to Section 12022.65.

SECTION 12. Section 12022.65 is added to the Penal Code to read:

12022.65. (a) Any person who acts in concert with two or more persons to take, attempt to take, damage, or destroy any property, in the commission or attempted commission of a felony shall be punished by an additional and consecutive term of imprisonment of one, two, or three years.

(b) The additional term provided in this section shall not be imposed unless the existence of the facts required in subdivision (a) are charged in the accusatory pleading and admitted by the defendant or found to be true by the trier of fact.

(c) Notwithstanding any other law, the court may impose an enhancement pursuant to this section and another section on a single count, including an enhancement pursuant to Section 12022.6.

SECTION 13. Section 12022.7 of the Penal Code is amended to read:

12022.7. (a) Any person who personally inflicts great bodily injury on any person other than an accomplice in the commission of a felony or attempted felony shall be punished by an additional and consecutive term of imprisonment in the state prison for three years.

(b) Any person who personally inflicts great bodily injury on any person other than an accomplice in the commission of a felony or attempted felony which causes the victim to

become comatose due to brain injury or to suffer paralysis of a permanent nature shall be punished by an additional and consecutive term of imprisonment in the state prison for five years. As used in this subdivision, "paralysis" means a major or complete loss of motor function resulting from injury to the nervous system or to a muscular mechanism.

(c) Any person who personally inflicts great bodily injury on a person who is 70 years of age or older, other than an accomplice, in the commission of a felony or attempted felony shall be punished by an additional and consecutive term of imprisonment in the state prison for five years.

(d) Any person who personally inflicts great bodily injury on a child under the age of five years in the commission of a felony or attempted felony shall be punished by an additional and consecutive term of imprisonment in the state prison for four, five, or six years.

(e) Any person who personally inflicts great bodily injury under circumstances involving domestic violence in the commission of a felony or attempted felony shall be punished by an additional and consecutive term of imprisonment in the state prison for three, four, or five years. As used in this subdivision, "domestic violence" has the meaning provided in subdivision (b) of Section 13700.

(f) *(1)* As used in this section, "great bodily injury" means a significant or substantial physical injury.

(2) As used in this section, a person who sells, furnishes, administers, or gives away a controlled substance is deemed to have personally inflicted great bodily injury when the person to whom the substance was sold, furnished, administered, or given suffers a significant or substantial physical injury from using the substance.

(g) This section shall not apply to murder or manslaughter or a violation of Section 451 or 452. Subdivisions (a), (b), (c), and (d) shall not apply if infliction of great bodily injury is an element of the offense.

(h) The court shall impose the additional terms of imprisonment under ~~either~~ subdivision (a), (b), (c), or (d), but may not impose more than one of those terms for the same offense.

SECTION 14. Chapter 36 (commencing with Section 7599.200) is added to Division 7 of Title 1 of the Government Code, to read:

7599.200. (a) This section shall be known as "Funding for the Homelessness, Drug Addiction, and Theft Reduction Act."

(b) From monies disbursed to the Board of State and Community Corrections pursuant to paragraph (3) of subdivision (a) of Section 7599.2 of the Government Code and Section 6046.2 of the Penal Code, the Board of State and Community Corrections may allocate appropriate funds to counties and local governments for programs specified in Section 11395 of the Health and Safety Code. This provision shall not preclude funding for this Act from any other source, including but not limited to the Local Revenue Fund 2011 established under Government Code Section 30025 and other such funds designated for substance abuse and mental health treatment.

(c) A defendant charged with a treatment-mandated felony is eligible for any appropriate Medi-Cal or Medicare programs or services, including but not limited to those described in Government Code Section 30025(f)(16)(B)(iii)-(v), for the defendant's programs specified in Section 11395 of the Health and Safety Code. A county or local government may contract directly with the State Department of Healthcare Services or any other applicable State agency to provide for the provision or administration of any applicable Medi–Cal or Medicare treatment programs.

SECTION 15. Amendments

(a) Except as provided in subdivision (b), this Act shall not be amended by the Legislature except by a statute that furthers the purposes, intent, findings, and declarations of the Act and is passed in each house by roll call vote entered in the journal, two-thirds of the membership of each house concurring, or by a statute that becomes effective only when approved by the voters.

(b) The Legislature may, by majority vote, amend Section 11369 of the Health & Safety Code only to expand the list of drugs that qualify as a "hard drug" and to expand the list of convictions to which it applies, and may, by majority vote, amend Section 11395 of the Health & Safety Code only to expand the list of drugs that qualify as a "hard drug" and to expand the list of applicable prior convictions , and may, by majority vote, amend Section 666.1 of the Penal Code only to expand the list of applicable prior convictions.

SECTION 16. Severability

If any provision of this Act, or any part of any provision, or the application of any provision or part to any person or circumstance is for any reason held to be invalid or unconstitutional, the remaining provisions and applications of provisions shall not be affected, but shall remain in full force and effect, and to this end the provisions of this Act are severable.

SECTION 17. Conflicting Initiatives

(a) This Act creates a new drug treatment statute and changes the penalties for career and serial thieves. In the event that this Act and another initiative measure or measures relating to the same subject appear on the same statewide ballot, the provisions of the other measure or measures

shall be deemed to be in conflict with this measure. In the event this measure receives a greater number of affirmative votes than a measure deemed to be in conflict with it, the provisions of this measure shall prevail in their entirety, and the provisions of the other measure or measures shall be null and void.

(b) If this measure is approved by voters but superseded by law by any other conflicting measure approved by the voters at the same election, and the conflicting ballot measure is later held invalid, this measure shall be self-executing and given full force and effect.

COUNCIL COMMUNICATION

CC #: 3495
File #: 0103-34-02

Title:	Grants Advisory Commission - Policy Manual Updates and Direction on Voting Status of Youth Commissioner
Contact:	Tobi Thomas 916-746-1368 tthomas@roseville.ca.us

Meeting Date: 8/21/2024
Item #: 9.1.

RECOMMENDATION TO COUNCIL

Staff recommends that the City Council:

1) Approve the Youth Commissioner to become a voting member of the Grants Advisory Commission; and
2) Adopt a resolution to approve the Grants Advisory Commission (GAC) recommendations to update the Citizens' Benefit Fund (CBF) Policy Manual regarding eligibility of applicants.

BACKGROUND

Each year, the Grants Advisory Commission (GAC) reviews the past year's grant funding cycle process and documents and updates them, as needed, for the upcoming year. There are two items the GAC is recommending the City Council considers and adopts and approves:

1) Update the Citizens' Benefit Fund Policy Manual regarding eligibility of applicants, and
2) Allow the Youth Commissioner to become a voting member of the GAC

Citizens' Benefit Fund Policy Manual Update

During the FY2024-25 grant application process, another city reached out to the City Attorney's Office to learn about our long-standing success with the Grants Advisory Commission as they considered establishing a similar program. In sharing resources and discussing grant program insights with this city, staff discovered a California Constitutional provision from 1879 barring the use of public funds to directly aid private schools. It states:

No public money shall ever be appropriated for the support of any sectarian or denominational school, or any school not under the exclusive control of the officers of the public schools; nor shall any sectarian or denominational doctrine be taught, or instruction thereon be permitted, directly or indirectly, in any of the common schools of this State.

(Cal. Const., art. IX, § 8.)

In an effort to clarify this for our GAC applicants going forward, staff and the Commissioners reviewed the grant documents and recommended revising the Citizens' Benefit Fund Policy Manual under the Grant Request from Schools (page 16) section as follows:

Funds will not be awarded directly for private schools (a private school is any school not under the exclusive control of the officers of the public schools; public charter schools are generally not private schools), unless it is clear that any benefit to a private school is, at most, merely an "incidental" or "indirect" effect, and the direct benefit is improving the quality of life for the citizens of Roseville. For example, a private school passing through funds to provide food security to its students who are citizens of Roseville has no direct benefit to the private school itself, providing direct benefit, though, to our citizens.

Youth Commissioner Voting Status

The City's Boards and Commissions currently have four youth commissioners who serve on the Grants Advisory Commission, Transportation Commission, Parks and Recreation Commission, and the Library Board. The GAC Youth Commissioner is the only youth commissioner without voting rights.

When the GAC was formed, the Commissioners at that time felt the voting responsibility required more life experience than a high school student would have, given the competitive nature and the large dollar amounts given to the nonprofit organizations through the grants. Time has revealed that the Youth Commissioners' dedication, contributions, scoring and feedback have proven to be very valuable information to the Commissioners when making their decisions and recommendations to City Council. Notably, their scoring, though it hasn't counted toward final recommendations, has been highly consistent with the scoring of the rest of the commissioners. Given the exceptional quality and maturity of the high school students who serve on this commission, the GAC recommends changing the status of the youth commissioner to a voting member of the GAC, consistent with the status of the youth commissioners serving on the City's other boards and commissions. If approved by Council, staff will incorporate this change in a forthcoming version of the City of Roseville City Council/Boards, Commissions, and Committees Administrative Standards.

FISCAL IMPACT

This will have no fiscal impact to the General Fund.

ENVIRONMENTAL REVIEW

The California Environmental Quality Act (CEQA) does not apply to activities that will not result in a direct or reasonably foreseeable indirect physical change in the environment or is otherwise not considered a project as defined by CEQA Statute §21065 and CEQA State Guidelines §15060(c)(3) and §15378. Approval of the Grants Advisory Commission recommendations meet the above criteria and are not subject to CEQA. No additional environmental review is required.

CITY COUNCIL STRATEGIC PLAN/OVERARCHING GOALS

Goal B - Support community engagement and advocacy
Goal E - Deliver exceptional city services

Respectfully Submitted,

Tobi Thomas, Management Analyst

Megan Scheid, Deputy City Manager

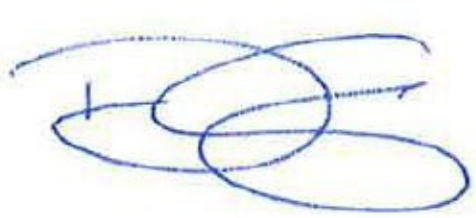

Dominick Casey, City Manager

ATTACHMENTS:

Description

Resolution 24-294

CBF Policy Manual Updates - Redline

RESOLUTION NO. 24-294

APPROVING REVISIONS TO THE CITIZENS' BENEFIT FUND POLICY MANUAL

WHEREAS, the Grants Advisory Commission reviews policies and procedures annually in an effort to improve efficiencies and streamline processes; and

WHEREAS, this year, staff recommends the following policy revisions to the Citizens' Benefit Fund Policy Manual for the upcoming 2024/2025 funding cycle:

Applicant Eligibility

- Updates policy to exclude private schools from receiving funds per California Constitutional provision.

WHEREAS, City Council has reviewed staff recommendations; and

NOW, THEREFORE, BE IT RESOLVED by the Council of the City of Roseville that said recommendations are hereby approved.

PASSED AND ADOPTED by the Council of the City of Roseville this____day of _____, 2024, by the following vote on roll call:

AYES – COUNCILMEMBERS:

NOES – COUNCILMEMBERS:

ABSENT COUNCILMEMBERS:

_____
MAYOR

ATTEST:

_____
City Clerk

City of Roseville
Citizens' Benefit Fund
Policy Manual

adopted by the
Roseville Grants Advisory Commission

September 12, 2000
amended
November 12, 2002
December 3, 2003
November 9, 2004
November 8, 2005
November 18, 2008
December 19, 2012
October 8, 2013
February 17, 2016
June 21, 2017
November 18, 2020
October 18, 2023
August 21, 2024

Policy Manual
Table of Contents

Purpose …….. 2
Chronology of Citizens' Benefit Fund…… 3
Adopted Policies of the Grants Advisory Commission & Roseville City Council….. 6
Criteria for Grant Applicants…… 7
Original Criteria and Application Submittal Requirements…….. 7
Americans with Disabilities Act Compliance……. 7
Bids for Capital Items……..…….. …. 7
Funding for Religious or Sectarian Activities Prohibited……..…. 8
Grant recipients located in Roseville …… 8
Ownership or Long-term Lease of Property Improved with Grant Funds……. 8
Compliance with California Prevailing Wage Law – SB 975/AB 2690…….. 8
Tax Status……... 9
Process-Related Policies…….…… 10
Annual Review …… 10
Recipient Reporting ……... 10
Appeal of Grant Advisory Commission Decision …….. 10
Funds Expended within One Year …….. 10
Line Item Review…… 10
Applicant Workshop…… 11
Process to Amend or Extend Timeframe of Approved Grants……..……. 11
Site Visits……. 11
Application Review and Process…….…… 12
Funding Policies…….…… 13
City Projects..…….. 13
Categories and Target Maximum Amount……..……... 13
Funding Priorities…….……... 13
Matching Funds Not Required……... 14
Multiple Applications from One Agency……... 14
Multiple Year Grants …….. 14
Perpetual Funding …….. 15
Fund Investing & Funding Source……. 15
Grant requests from Schools …… 15
Appendices……. 16
A: Ordinance 3388
B: Application Guidelines
C: Application
D: Finance Department Audit Form (Request for Funds and Report of Expenditures) – form retired after 2007/08 funding cycle
E: Grant Agreement
F: Request for Amendment to Grant Application
G: Memorandum from Deputy City Attorney Bob Schmitt to Assistant to the City Manager Julia Burrows dated September 20, 2002 regarding SB 975 and the Citizens' Benefit Fund
H: Memorandum from Associate City Attorney Michele Sheidenberger dated August 31, 2004 regarding AB 2690 and the Citizens' Benefit Fund
I: 2013 Historical Assessment of the Roseville Grant Program

J: Implementation Strategies for 2019/20 Kone' Consulting's Community Needs Assessment (CNA)

City of Roseville
Citizens' Benefit Fund
Policy Manual

Purpose

The purpose of the Citizens' Benefit Fund Policy Manual is to:

- Document the policy decisions of the Grants Advisory Commission and Roseville City Council regarding the Citizens' Benefit Fund by year and by topic;
- Serve as a reference for new Grants Advisory Commissioners and Roseville City Councilmembers as to program implementation; and
- Answer questions from the public regarding the grants process, including questions from potential grant applicants, and current grant recipients.

Chronology of Citizens' Benefit Fund

Jun 1, 1994	Grants Advisory Commission established by Ordinance 2774. Hospital Proceeds Fund Established by Ordinance number 2788. Chapter 4.06 is added to the Roseville Municipal Code to establish the Hospital Proceeds Fund.
Jul 12, 1994	City Council approves criteria and first grant application.
Jan 25, 1995	Joint City Council/Grants Advisory Commission Workshop to discuss Grant application process, including estimated timeframe for processing grant applications and restricting grant funds to benefit Roseville residents only for specific project, rather than general funding; no funding for administrative costs, audit procedures following Grant awards; procedures to notice Commission meetings and interviews with applicants.
Sep 10, 1997	Joint City Council/Grants Advisory Commission Workshop to discuss grant consideration process, appeal opportunities, award process, stewardship of funds, application form changes, multiple year funding, auditing, collaboration of organizations, grant requests for capital projects, city projects or from agencies outside the city.
Dec 16, 1998	City Council approves formal process to consider modifications to approved grants and adoption of marketing program for the Citizens' Benefit Fund.
Aug 18, 1999	Ordinance 3388 adopted by the Roseville City Council amending Chapter 4.06 of the Roseville Municipal Code. Amendments include: 1. Name change from Hospital Proceeds Fund to Citizens' Benefit Fund to reflect opportunity for donations to the fund from the community rather than limited principal amount from sale of municipal hospital. 2. Amendment to Section 4.04.040, Expenditures of Money, to indicate unappropriated amounts may be carried forward to subsequent fiscal years, or at the discretion of the City, may be added to the principal.
Jul 10, 1999	Joint City Council/Grants Advisory Commission Workshop to discuss policies related to requirement for matching funds, grant funding for leased vs. owned property, perpetual funding, monitoring/annual reports, and Ad Hoc Committee.
Nov 3, 1999	City Council adopts policies related to issues from joint Commission/Council workshop.
Dec 3, 2003	City Council approves Grants Advisory Commission recommendations for funding criteria and process improvements following three workshops by the Commission and the first REACH/Enron funding cycle.

Dec 15, 2004	City Council approved Grants Advisory Commission recommendations for revisions as a result of AB 2690 – repealing the requirement that volunteers be paid prevailing wages and eliminating the mandatory workshop.
December 19, 2012	The City Council approved a financial report on the Citizens' Benefit Fund (CBF) and a work plan for a comprehensive grants policy review.
May 29, 2014	GIM to the City Council regarding completion of phase 1 in the Comprehensive Grants Review Process – Historical Assessment Report of the Roseville Grants program.
April 20, 2015	Joint City Council/Grants Advisory Commission Workshop to discuss policies relating to administration of the Fund and Fund investment and program options.
December 16, 2015	City Council considered and reaffirmed: 1. Retention of the Citizens' Benefit Fund (CBF) with the City to be invested and administered by the City. 2. Retention of the Grants Program and Commission with administration by the City. 3. Revision of the Citizens' Benefit Fund (CBF) Policy Manual and Guidelines, as follows: a) Accept investment strategy revisions expanding strategy consistent with Government Codes. b) Reaffirm smoothing strategy to hold back proceeds in excess of $500K and establish new policy for annually utilizing proceeds in excess of $500K for smoothing or special projects or community benefits. c) Reaffirm the nine (9) funding program categories. d) Retain limits on school districts and schools, as approved by the Grants Commission. e) Continue policy that the City Manager, or his designee, approve grants submitted for City requests. f) Confirm no giving priorities with each funding request to be evaluated on its own merits. g) Establish a policy for an annual needs assessment for Council to consider and establish priorities for the coming funding cycle.
June 17, 2017	City Council approved revisions to Grants Policy Documents to streamline program procedures relating to administration of Grants program. Additionally, Grants have been focused and aligned to solely private schools and non-profits entities.

November 18, 2020. City Council approved new Implementation Strategies provided by the Grants Advisory Commission based on findings from the Community Needs Assessment by Kone Consulting. Changes include:

1.) Service Categories
2.) Funding priorities
3.) Collaboration
4.) Promoting Outcomes
5.) Measuring Success
6.) Scoring Methodologies

October 18, 2023 City Council approved revisions to clarify policies relating to bid requirements and site visits by the Grants Commissioners.

Adopted Policies of the Grants Advisory Commission and Roseville City Council 1994-2023

Criteria for Grant Applicants

Original Criteria and Application Submittal Requirements (6/94, 2/16)
Americans with Disabilities Act Compliance (1/99)
Bids Required for Capital Expenditures to be Included (1/96, 10/99) revised 10/23
Funding for Religious or Sectarian Activities Prohibited (1/99)
Grant recipients located in Roseville (9/97)
Ownership or Long-term Lease of Property Improved by Grant Funds (11/99)
Compliance with State of California Prevailing Wage Law – SB 975 (11/02) & AB 2690 (12/04)
Tax Status (12/03)

Process-Related Policies

Annual Review (10/13, 6/17)
Recipient Reporting (11/99)
Appeal of Grant Advisory Commission Decision (9/97, 6/17)
Funds Expended within One Year (8/97)
Line Item Review (11/99)
Applicant Workshop (9/97)
Process to Amend or Extend Timeframe of Approved Grants (12/98)
Site Visits (12/03, clarified 10/23)
Application Review and Process (12/03, 2/16, 6/17)

Funding Policies

Categories and Target Maximum Amount (9/97, 12/03, 2/16, 6/17, 11/20)
Priority Areas (11/20)
Matching Funds Not Required (11/99)
Multiple Applications from One Agency (12/03, 6/17)
Multiple Year Grants (9/97, 12/03)
Perpetual Funding (11/99)
Fund Investing and Funding Source (11/05, 2/16)
Funding for Schools (11/08, 6/17, 8/24)

Criteria for Grant Applicants

Original Criteria and Application Submittal Requirements — Adopted July 1994, Revised February 2016

The original criteria and application form were established by the Grant Evaluation Criteria Subcommittee in 1994. The subcommittee conducted public meetings on May 24, June 14, and June 27 to discuss and revise the guidelines and presented their draft, adopted by the Commission on June 27th to the City Council on July 6, 1994.

The criteria included a points/rating system that was not adopted by the Commission. A majority of the questions in the current application were as originally drafted. New policies that have amended the application over time are discussed in this manual.

In January 2014, the Grants Advisory Commission approved, and made a requirement that all, Grant Applications be submitted via an online web-based program.

Americans with Disabilities Act Compliance — Adopted January 1999

The Commission added a question to the application form requesting specific information regarding compliance with the Americans with Disabilities Act. The City is not allowed to fund programs or services by agencies that do not comply with ADA. Applicants are also required to comply with state disability laws, which in many cases are more stringent than the federal ADA law.

Bids Required for Capital Expenditures — Adopted January 1996, Revised October 1999, Revised February 2016, Revised October 2023

In January 1996, the Commission adopted a requirement for applicants to submit bids for ”capital expenditures.”

Capital expenditures for individual items and projects less than $500 do not require documented bids. Capital expenditures for individual items and projects costing $3,999 and under must have at least three (3) telephone or written bids documented/included with the submitted application. Capital expenditures for individual items and projects costing $4,000 and above must have three (3) written bids included with the submitted application. Bids do not have to be awarded to the lowest bidder; bids should be awarded to the most responsible bidder.

If, in the rare case, the capital expenditure item or project is not conducive to bidding, an explanation in lieu of bid information should be attached to the application, e.g., in some instances, three bids are not available for specialized equipment that may be manufactured by only one or two companies. Additionally, in some cases, bids are only valid for 30 to 60 days or less, while the grant application process runs from approximately December through June for final approval, which may extend beyond the expiration date for the bids. The bids are still to be included in the application, but with notations if less than three (3) bids are included.

Bid Requirements Summary: Individual items and projects costing $500 - $3,999 require three (3) documented telephone, online or written cost estimates. Individual items and projects $4,000 or greater require three (3) written cost estimates. Individual items or projects less than $500 do not require an estimate.

Capital expenditure – An expenditure that results in the acquisition of fixed assets or additions to fixed assets that have benefits for more than one (1) year. Examples include: the acquisition of land; existing buildings; land improvements; construction of buildings; additions and remodeling of buildings; initial, additional, and replacement of equipment, furniture and fixtures, machinery, vehicles, and media materials.

Funding for Religious or Sectarian Activities Prohibited Adopted January 1999

In January 1999, the Commission added a question to the application form asking if funding would be used to support any religious or sectarian activities. The City is allowed to fund religious organizations, but the activity, project or program cannot include the promotion a particular religious belief. The City is prohibited from funding religious activities based on laws governing the separation of church and state.

Grant Recipients Located in Roseville Adopted September 1997

The Commission and Council specified that grant recipients are to be located in Roseville rather than previous wording stating that grant recipients are to be "local." In practice, this has been interpreted by the Commission to mean that grant recipients that provide service in Roseville, but may have headquarters or offices in other locations, are eligible for funding.

Ownership or Long-Term Lease for Properties Improved by Grant Funds Adopted November 1999 Revised February 2016

Concerns were raised during the 1999-2000 grant funding cycle regarding the investment in properties by grant applicants who do not own the property. The public funds are therefore making the property of a private citizen more valuable. Grant applicants are required to submit ownership documents and/or copies of lease agreements that reveal how long the property will be leased by the applicant. With long-term leases, the value of any capital improvements will depreciate over time and benefit the grant recipients directly. The Commission recommended and the Council adopted a policy to review the applicants with long-term leases on a case-by-case basis. Staff is to look at the amount of grant funding requested and the use of the funds in particular.

Compliance with California Prevailing Wage Law – SB 975 Adopted November 2002 Revised December 2004 Revised February 2016

The California Labor Code as amended by SB 975 in 2000 affects applicants to the Citizens' Benefit Fund in two ways: the requirement to pay prevailing wages for public or private works of improvement that receive public funds and the use of volunteer labor.

By Interoffice Memorandum from the City Attorney's Office to the City Manager's Office dated September 20, 2002, the attorney clearly states applicants must comply with the SB 975. The memo details the policy for the State Prevailing Wage Laws and the Applicability to Volunteer Labor. The memorandum is attached as Appendix G to the Policy Manual.

By Interoffice Memorandum from the City Attorney's office to the City Manager's office dated August 31, 2004, the requirement that prevailing wages be paid to volunteers on public works projects was repealed by urgency legislation signed by the Governor.

Under the new law, AB 2690, the requirement to pay prevailing wages does not apply to volunteers, volunteer coordinators, or members of the California Conservation Corps or Community Conservation Corps. Although a volunteer cannot be paid, the volunteer may receive reasonable meals, lodging, transportation, and incidental expenses or nominal non-monetary awards without losing volunteer status if those benefits and payments are not a substitute form of compensation for work performed. The Memorandum is attached as Appendix H to the Policy Manual.

State Prevailing Wage Laws. Any grant applicant receiving $1,000 or greater in public monies, in this case, Citizens' Benefit Fund, must pay prevailing wages to all workers employed on public works. Public works actually includes any public or private work of improvement, and is defined as "construction, alteration, demolition, installation, or repair work done under contract and paid for in whole or in part out of public funds." (Labor Code Section 1720 (a)(1)).

Exceptions to the law include public utility improvements, carpet installation, transportation projects, and certain residential and low-income housing projects. (Labor Code Section 1720(a)).

An applicant or their advisor may request the Director of Industrial Relations to provide an opinion as to the applicability of SB 975 to their project. Previous opinions and current prevailing wages can be found at the state agency's web-site: www.dir.ca.gov.

Tax Status

Adopted December 2003
June 2017

The Grants Advisory Commission is recommending that only agencies with the following tax status be eligible for funding.

- 501(C) 3
- 501(C) 4
- Private schools

Applications from agencies that are not within one of these categories will be ineligible. For example, 501 (C) (6) are not eligible because 1) by definition they exist primarily to serve their members rather than the community at large and 2) they can lobby and take political positions on issues, thus creating potential for conflict of interest.

Process-Related Policies

Annual Review

Adopted October 2013
Revised February 2016
Revised June 2017

The Grants Staff Liaison will annually review the Grant Application and Guidelines, and make revisions to improve efficiencies. The Grant Application and Guidelines shall reflect, but is not limited to: 1) current funds available; and 2) Council priorities, if identified.

Recipient Reporting

Adopted November 1999
Revised November 2005, 2008
Revised February 2016

Beginning with the 2009-10 funding cycle, applicants who fail to submit a Final Report for a grant received from the preceding funding year are not eligible to apply during the subsequent funding year, or any future funding cycle until at least one year after the Final Report has been submitted.

Beginning with the 2006-2007 funding cycle, each recipient is required to submit a report describing the expenditures and accomplishments achieved with the grant funds. The report is due within 30 days of the end of the grant period. In addition, the Commission at its discretion may also require a grant recipient to submit a "mid-year" report due six months from the grantee's initial receipt of funds.

Appeal of Grant Advisory Commission Decision

Adopted September 1997
Revised June 2017

There is no appeal of Grant eligibility made by the Grants Staff Liaison or allocation recommendation made by the Commission. Final allocation decisions are made by the City Council.

Funds Expended within One Year

Adopted August 1997

Based upon several requests from agencies that funds be carried over to another fiscal year, or be used for additional purposes, the Commission voted to revise all forms stating that funds must be expended during the fiscal year for which the grant was included in the City budget. The Citizens' Benefit Fund contract was also amended to state that all funds must be spent with one year.

Line Item Review

Adopted November 1999

The City Council reaffirmed a standing practice that individual grant applications may be reviewed by the City Council following the recommendations being forwarded by the Grants Advisory Commission. The City Council reviews the recommendations as part of the annual

budget adoption in June of each year. Councilmembers may “pull” individual grant applications for discussion, questions, and separate action.

Applicant Workshop

Adopted September 1997
Revised November 2004
Revised February 2016

The Grants Advisory Commission strongly encourages that a representative from each applying agency attend the applicant workshop, held on the 2nd Tuesday of January.

Process to Amend or Extend Timeframe of Approved Grants

Adopted December 1998

In September 1998, the Commission determined that a formal process should be established to clearly define the requirements in the event a change to an approved grant was requested by a grant recipient. Through the work of Policy Subcommittee members, Sylvia Besana, Carol Garcia, and Susan Rohan, guidelines and a standard form were drafted for use by future applicants. Appendix F includes the Guidelines and Form approved by the City Council on December 16, 1998. As stated in the Guidelines, the City does not encourage amendments to approved grants. Circumstances may warrant flexibility by the Grants Commission and the City Council; however, only if the criteria established by the Policy Subcommittee are met and the amendment process is followed.

Site Visits

Adopted December 2003
Revised February 2016
Revised October 2023

The Commission reached consensus to NOT conduct site visits during the application period - beginning when applications become available to applicants until City Council takes action on funding recommendations (approximately, December through June— and to limit visits to other times during the year.

If individual Grants Commissioners visit applicants during the process of reviewing grants, they may receive information in addition to that contained in the written application that is not received by the other Commissioners (in addition to general Brown Act considerations). The City’s criteria specifically states the grant will be awarded based upon the written materials provided to the Commission for its consideration.

For clarity, “site visits” includes visiting the physical location(s) or site(s) of an applicant or anticipated applicant (collectively, “applicant”) of grant funding, as well as attending, participating, or visiting, a location where an applicant(s) is hosting, co-hosting, sponsoring, or otherwise engaged in carrying out an event, program, open house, or activity.

Application Review and Process

Adopted December 2003
Modified October 2013
Revised February 2016
Revised June 2017

The Grants Commission Staff Liaison shall review and either approve or disqualify each grant application. Staff will make their decisions based upon the materials submitted by the agency and/or organization. Grant applications submitted without required and/or complete documents will be disqualified. Grant applicants do not have the right to appeal disqualifications.

The Grants Advisory Commission will meet in the Council Chambers on the second Tuesday of April to review and recommend final funding for each grant application.

Funding Policies

City Projects

Adopted September 1997
Reaffirmed October 1999
Revised February 2016

Due to the limited amount of funding in the community and the high level of local need for qualifying projects, City projects and programs will no longer qualify for funding.

Categories and Target Maximum Amount

Adopted September 1997
Revised December 2003
Revised February 2016
Revised June 2017
Revised November 2020

In keeping with the original intent of the sale of the Roseville hospital to "Improve the Quality of Life for the Citizens of Roseville", Service Categories have been aligned with Social Determinants of Health as interpreted in the Kone Consulting community workshops with the goal of making Roseville a healthier community. The City Council approved updated funding Service Categories as follows:

- Neighborhood and Physical Environment – Improved access to safe and affordable housing for all
- Food – Increased access to healthier food options for lower income communities
- Health and Wellness – Improved physical, mental, and behavioral health and wellness
- Community and Social Context – Improved access to arts and cultural resources for all and a kinder, more inclusive and connected community
- Education – More vocational training and educational opportunities for all ages

For a more detailed definition of previously approved CBF Categories, please refer to the 2013 Historical Assessment of the Roseville Grant Program (Appendix I). At its discretion, the Grants Advisory Commission, with action by the City Council, may wish to prioritize the above-stated categories for CBF funding for a given application year.

Funding Priorities

Adopted November 2020

The target goal is to divide the grants awards among the three areas described below. The Commission will work to fund grant requests to the extent it is reasonable based on funds available, the applications received and the consensus on merit of the proposals in a given year.

The City Council approved the addition of the following funding priorities:

1. Strategic, one-time grants for innovative projects or programs, capital improvements or new initiatives. Examples of these “special” grants may be:

    - **New Initiatives** – Applicant identifies a need, service, or opportunity in the community that could offer an enhanced and improved quality of life or experience in Roseville.

    - **Innovative Ideas** – Based on models from other areas or agencies and attempting to take a new approach in providing opportunity to enhance or improve quality of life or experience in Roseville.

    - **One-time requests** – If applicants need special consideration on a single request basis.

2. Operational/Mission support grants for programs or projects that demonstrate effectiveness addressing a community need. Grant recipient can reapply in future years for this priority area.

3. Smaller requests of up to $10,000 which can go towards either new programs/projects or support existing operations which have demonstrated effectiveness at meeting community needs.

Matching Funds Not Required Adopted November 1999

The City Council approved the Grants Advisory Commission recommendation that matching funds not be required of grant applicants. Mandating that matching funds be required would limit the application numbers and the flexibility of the Commission and Council to award grants to worthy applicants. Matching funds will be a component of the evaluation by Commissioners and Council in determining which applicants have demonstrated their commitment to a project, but will not be mandatory.

Multiple Applications from One Agency Affirmed December 2003
Revised November 2004
Revised June 2017

The Commission agreed that the practice of allowing multiple grant applications from a single agency should not be continued. The City Council has directed the Commission to issue fewer larger grants.

Multiple Year Grants Adopted September 1997
Reaffirmed November 2020

The Grants Advisory Commission and City Council discussed, but voted against allowing grant applicants to apply for funding beyond one fiscal year. Funding is only available for the fiscal year in which the grant is approved.

The Commission and Council affirmed this policy after discussion in 2020.

Perpetual Funding

Adopted November 1999
Reaffirmed December 2003

The City Council approved the Grants Advisory Commission recommendation that no limit be set on the number of years a grant applicant may receive funding. Grant applicants will be judged on their individual merit each year.

The Commission and Council affirmed this policy after discussion in 2003. There are several agencies that receive repetitive funding from the Citizens' Benefit Fund. In fact, five organizations have received funding in all of the past ten funding cycles, and six organizations have received funding in eight of the last ten funding cycles. The Commission agreed that because the agencies provide worthy services to the community and Commissioners do an independent evaluation each year, there should not be a limit on repetitive funding.

Fund Investing & Funding Source

Adopted November 2005
Revised February 2016

Grant Funds shall be invested in accordance with the Government Code §53601, as determined by the City's Chief Financial Officer or his designee.

Grant Fund proceeds in excess of $500,000 shall be retained for smoothing during lean years and/or special project or community benefits, as approved by the City Council.

The Grants Advisory Commission may award grants from multiple funding sources. In the event that an applicant meets funding criteria for more than one funding source, the Commission has the discretion to make awards from any or all funds for which any individual applicant is eligible.

Grant Requests from Schools

Adopted November 2008
Revised June 2017
Revised August 2024

Private School and non-profit Parent-Teacher Clubs, Booster Clubs and non-profit school-based programs are eligible to apply and are limited to one grant request per site.

Funds will not be awarded directly for private schools (a private school is any school not under the exclusive control of the officers of the public schools; public charter schools are generally not private schools), unless it is clear that any benefit to a private school is, at most, merely an "incidental" or "indirect" effect, and the direct benefit is improving the quality of life for the citizens of Roseville. For example, a private school passing through funds to provide food security to its students who are citizens of Roseville has no direct benefit to the private school itself, providing direct benefit, though, to our citizens.

Appendices (to be replaced/updated annually by City staff as needed)

Related Ordinances - Appendix A

Funding Guidelines for Current Year - Appendix B

Grant Application for Current Year - Appendix C

Request for Funds & Report of Expenditures - Appendix D

Sample Grant Agreement - Appendix E

Request for Amendment to CBF Grant - Appendix F

Memorandum re: SB975 and Citizens' Benefit Fund - Appendix G

Memorandum re: AB 2690 and Citizens' Benefit Fund - Appendix H

2013 Historical Assessment of the Roseville Grant Program – Appendix I

Implementation Strategy 2019/20 Kone' Consulting's CNA - Appendix J

COUNCIL COMMUNICATION

CC #: 3483
File #: 0102

Title:	Council Discretionary Funds - Latino Leadership Council
Contact:	Heather Blanco 916-746-1171 hblanco@roseville.ca.us

Meeting Date: 8/21/2024
Item #: 9.2.

RECOMMENDATION TO COUNCIL

Recommend that the City Council consider a sponsorship of $1,500 from Council Discretionary Funds for the Latino Leadership Council for their 10th annual forum on the Latino Community on September 11, 2024, would be greatly appreciated. This year's theme is "Celebrating 10 Years of Bringing our Communities Together: Latinos Thrive when Partnerships Work". There is no fiscal impact to the City's General Fund.

BACKGROUND

The Citizens' Benefit Fund was established in 1993 with the net proceeds from the sale of the Roseville Hospital. The City Council may, after receiving the recommendation of the Roseville Grants Advisory Commission, annually appropriate up to 90 percent of the annual earnings of the Citizens' Benefit Fund for the purpose of improving the quality of life for the citizens of the City of Roseville. The City Council, without the recommendation of the Roseville Grants Advisory Commission, may annually appropriate a minor amount up to $15,000 of the annual earnings for the purpose of improving the quality of life in Roseville.

The Latino Leadership Council (LLC) is the only Latino-focused nonprofit 501(c)(3) in the South Placer region that has been serving the underserved Latino communities, connecting them to health, education and youth development services and supporting agencies and organizations to build their capacity to serve this population.

The LLC has been an active partner with Roseville staff in community engagement in core neighborhoods and beyond and specifically with the Roseville Police Department. For the past seven years, LLC has been housed in a Roseville office complex to serve as its staff-only office. From there, LLC conducts home visits during the day, evenings and weekends to mitigate transportation and childcare barriers and serves all ages of Roseville residents from 0 -100.

Roseville staff from Police, Economic Development, City Clerk, and Public Affairs and Communications are planning to attend the Forum, which is free to attend and will be held at the Rocklin Event Center. This sponsorship is to help underwrite event costs.

LLC supporters include County of Placer Health and Human Services, Placer County Office of Education, Placer Community Foundation, First 5 Placer, Kaiser Permanente, and Sutter Health.

FISCAL IMPACT

There is no fiscal impact to the City's General Fund. Annually, the Assistant City Manager/Chief Financial Officer allocates $15,000 of the annual earnings on the Citizens' Benefit Fund per section 4.06.040 in the Municipal Code and includes it in the annual budget along with the Citizens' Benefit Fund resources available for appropriation each year. These earnings are restricted for the purpose of improving the quality of life for Roseville residents and appropriated by the City Council. The balance remaining in the Council's Discretionary Funds for FY2024-25 after rolling over unspent funds from last fiscal year is $18,321.

ENVIRONMENTAL REVIEW

The California Environmental Quality Act (CEQA) does not apply to activities that will not result in a direct or reasonably foreseeable indirect physical change in the environment, or is otherwise not considered a project as defined by CEQA Statute §21065 and CEQA State Guidelines §15060(c)(3) and §15378. The award of funds meets the above criteria and is not subject to CEQA. No additional environmental review is required.

CITY COUNCIL STRATEGIC PLAN/OVERARCHING GOALS

Goal B - Support community engagement and advocacy

Respectfully Submitted,

Heather Blanco, Executive Assistant

Carmen Avalos, City Clerk

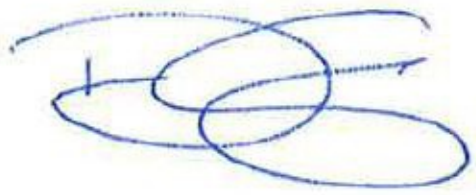

Dominick Casey, City Manager

ATTACHMENTS:

Description

Latino Leadership Council

Advancing the wellness and leadership capacity of Latino populations.

Avanzando el bienestar y la capacidad de liderazgo de la gente Latina.

Concilio de Liderazgo LATINO Leadership Council INC.

July 8, 2024

Heather Blanco
Executive Assistant
Office of the City Manager
City of Roseville
311 Vernon Street
Roseville, CA 95678

RE: Council discretionary funds for our 10th Annual Forum on the Latino Community

Dear Heather,

Attached please find the sponsorship flyer for the Latino Leadership Council's *10th Annual Forum on the Latino Community*, which is a celebration of our organization's work in bringing complex issues impacting our Latino populations to our Placer and Sacramento region for awareness and discussion.

Our theme this year is "**Celebrating 10 Years of Bringing our Communities Together: Latinos Thrive when Partnerships Work**." We are proud to consider Roseville a partner.

We are the only Latino-focused nonprofit 501(c)3 in the region that has been serving the underserved communities, connecting them to health, education and youth development services, and supporting our agencies and organizations to build their capacity to improve their services to Latinos/as.

For the past 7 years, we have been housed in a Roseville office complex to serve as our staff-only office. We conduct home visits during the day, evenings and weekends to mitigate transportation and childcare barriers and serve all ages, from 0 -100.

We are requesting council discretionary funds in the amount of $1500 (Plata Sponsorship) or more. These funds will be used to pay for various costs associated with this event, including print materials, food and facility rental.

If you have any questions, please don't hesitate to contact me.

Sincerely,

Elisa Herrera
Founding Executive Director

A 501(c)3 Organization
office 530.320.5353 | **email** info@LatinoLeadershipCouncil.org
website www.LatinoLeadershipCouncil.org | **mail** 2945 Bell Road #274, Auburn, CA 95603

Celebrating 10 Years of Bringing our Communities Together: Latinos Thrive when Partnerships Work

Wednesday, September 11, 2024, 8 am-12:30 pm
Rocklin Event Center, Rocklin, CA

Sponsorship Levels

Our Annual Forum is the Latino Leadership Council's flagship event that attracts nearly 200 leaders in the government, health, education, human services, law enforcement, and business sectors who desire to learn about the cultural, linguistic, and capacity challenges and solutions to serve the largest ethnic group in California.

We are the region's only Latino-focused non-profit 501(C)(3) organization. Check out our great work at www.latinoleadershipcouncil.org

Platino Sponsor $5,000 (1 at this level)

- Logo on all event materials and wall display
- Recognition in printed signage & online event program, e-newsletter and social media
- Opportunity to leave promotional materials
- Special Verbal recognition in event welcome and closing
- Opportunity for representative to present Quetzal Awards

  * sponsorship comes with tickets for 8

Oro Sponsor $3,000 (4 at this level)

- Logo on all event materials and wall display
- Recognition in printed signage & online event program
- Opportunity to leave promotional materials
- Special Verbal recognition in event welcome and closing

  * sponsorship comes with tickets for 8

Plata Sponsor $1,500 (6 at this level)

- Logo on all event materials and wall display
- Recognition in printed signage & online event program
- Special Verbal recognition in event welcome and closing

  * sponsorship comes with tickets for 4

Mesa Sponsors $500 (30 available)

- Name and logo on one banquet table & wall display

  * sponsorship comes with tickets for 4

COUNCIL COMMUNICATION

CC #: 3498
File #: 0102

Title:	Council Discretionary Funds - The Gathering Inn
Contact:	Heather Blanco 916-746-1171 hblanco@roseville.ca.us

Meeting Date: 8/21/2024
Item #: 9.3.

RECOMMENDATION TO COUNCIL

Recommend City Council consider a request for sponsorship from Council Discretionary Funds for The Gathering Inn's annual Gathering for Hope 2024 event. This year's theme is a Roaring 20's Gala in honor of the Gathering Inn's 20 Year Anniversary. The event is taking place at the Rocklin Event Center on November 15, 2024.

BACKGROUND

The Gathering Inn, a 501 (c) (3) Non-Profit Organization is requesting sponsorship but did not specify an amount. For reference the City Council approved a $3,000 sponsorship in 2023 for this same event. The Gathering Inn organization is partnering with Robert Craig Films for the annual Gathering for Hope 2024 event. Robert Craig Films' dedicated efforts to confront the pressing challenge of homelessness through their "Big 5" initiative. This project is anchored by the compelling film "No Address," slated for a Summer 2024 release, which thoughtfully explores the complexities of homelessness, weaving narratives of adversity and resilience.
The Gathering Inn applied for funding from the Grants Advisory Commission during the Funding Cycle 2024-25 for their Mental Wellness Program but was not awarded any funds this cycle.
The Citizens' Benefit Fund was established in 1993 with the net proceeds from the sale of the Roseville Hospital. The City Council may, after receiving the recommendation of the Roseville Grants Advisory Commission, annually appropriate up to 90 percent of the annual earnings of the Citizens' Benefit Fund for the purpose of improving the quality of life for the citizens of the City of Roseville. The City Council, without the recommendation of the Roseville Grants Advisory Commission, may annually appropriate a minor amount up to $15,000 of the annual earnings for the purpose of improving the quality of life in Roseville.

FISCAL IMPACT

There is no fiscal impact to the City's General Fund. Annually, the Assistant City Manager/Chief Financial Officer allocates $15,000 of the annual earnings on the Citizens' Benefit Fund per section 4.06.040 in the Municipal Code and includes it in the annual budget along with the Citizens' Benefit Fund resources available for appropriation each year. These earnings are restricted for

the purpose of improving the quality of life for Roseville residents and appropriated by the City Council. The balance remaining in the Council's Discretionary Funds for FY2024-25 is $18,321.

ENVIRONMENTAL REVIEW

The California Environmental Quality Act (CEQA) does not apply to activities that will not result in a direct or reasonably foreseeable indirect physical change in the environment, or is otherwise not considered a project as defined by CEQA Statute §21065 and CEQA State Guidelines §15060(c)(3) and §15378. The award of funds meets the above criteria and is not subject to CEQA. No additional environmental review is required.

CITY COUNCIL STRATEGIC PLAN/OVERARCHING GOALS

Goal B - Support community engagement and advocacy

Respectfully Submitted,

Heather Blanco, Executive Assistant

Carmen Avalos, City Clerk

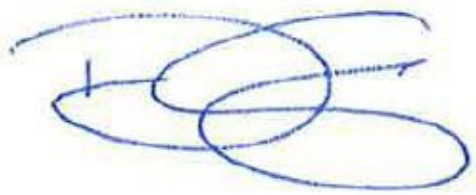

_____
Dominick Casey, City Manager

ATTACHMENTS:

Description

The Gathering Inn

20 Years of Reaching Out & Lifting Up

The Gathering Inn

Dear

As we celebrate the 20th anniversary of The Gathering Inn (TGI), we are thrilled to renew our partnership with **Robert Craig Films, serving once again as the Presenting Sponsor for our annual Gathering for Hope 2024 event.** This collaboration underscores Robert Craig Films' dedicated efforts to confront the pressing challenge of homelessness through their "Big 5" initiative. This project is anchored by the compelling film "No Address," slated for a Summer 2024 release, which thoughtfully explores the complexities of homelessness, weaving narratives of adversity and resilience. It is accompanied by the documentary "Americans With No Address," due in Spring 2024, providing an in-depth look at this issue. The initiative is further enriched by a novelization of "No Address," an interactive study guide to encourage conversations around solutions to homelessness, and a thematic music album. We are thankful for this partnership, which seeks to inspire change and hope by bringing light to the complexities of homelessness with a comprehensive and engaging approach.

This year also sees the return of the "Leo and Eileen French Spirit of Hope" award, a recognition of remarkable contributions towards combating homelessness. We are delighted to honor **Placer Title Company,** whose unwavering support has been pivotal in TGI's growth to now serving over 300 individuals daily across 12 program locations.

We cordially invite you to join us on **Friday, November 15, 2024, at the Rocklin Event Center** for an evening dedicated to uplifting those facing homelessness in Placer County. This event is a testament to the strength and generosity of our community, celebrating the significant contributions of our donors, partners, and supporters. Together, we aim to champion hope and provide a pathway to sustainable housing for those in need.

Your participation and support on this memorable night will not only honor our collective efforts but also amplify our impact, enabling us to offer comprehensive services including case management, rehabilitation, mental health support, and basic needs assistance. This gala is a promise of our community's commitment to dignity, hope, and the well-being of every individual we serve.

With warm regards,

Robert Craig Films

Keith E. Diederich, MS President and CEO

CCS CENTURY Commercial Service
LIGHTING ELECTRICAL PLUMBING MECHANICAL

Nella

PTC PLACER TITLE COMPANY

In celebration of the 20 Year Anniversary,
The Gathering Inn brings to you,

Gathering For Hope Roaring 20s Gala

A GLAMOROUS EVENING WITH
DINNER, VENDORS, RAFFLE & LIVE AUCTION.

Friday, November 15, 2024

DOORS OPEN AT 5:00 P.M.

Vendor Tasting, Raffle &
Hosted Cocktail Hour
5:00 – 7:00

Inspirational Program,
Dinner & Live Auction
7:00 – 9:30

Rocklin Event Center

2650 Sunset Boulevard
Rocklin, Ca 95677

1920's Dress Attire

encouraged

20 Years of Reaching Out & Lifting Up

Sponsorships Available

Please contact Darlene Cullivan
dcullivan@thegatheringinn.com

www.thegatheringinn.com | (916) 791-9355

The Gathering Inn Celebrates Their 20th Anniversary

Join us for the Signature Event

Gathering For Hope - November 15, 2024

The Gathering Inn

Sponsorship Opportunities

	Presenting $20,000	Title $10,000	Major $5,000	Hope $3,000
Opportunity to address the room of attendees	✓			
Premiere positioning on all event collateral	✓	✓		
Recognition in events PowerPoint and at least 1 emcee mention during event program	✓	✓	✓	
Logo displayed in the PowerPoint Presentation scrolling throughout the event	✓	✓	✓	✓
Logo listed on the event webpage with a hyperlink to your company's webpage	✓	✓	✓	✓
Premium Wine at the Dinner Table	Champagne included	✓	✓	✓
Program Recognition	Two full-page ads with prominent placement in program	One full page ad in the program	One 1/2 page ad in the program	Logo displayed in the program
Gathering For Hope Event Admissions	Two tables of 8	One table of 8	One table of 8	One table of 8

Gala Sponsorships

Benefits based on date of commitment

Coffee Station — $1,500

- Opportunity to provide branded napkins to guests at coffee station.
- Includes two (2) admission to the 2024 Gathering For Hope Event
- Corporate Sponsor recognition on event website, event invitation e-blast, event social media platforms, event signage, post-event thank you e-blast

Speakeasy — $3,500

- Logo Recognition on Cocktail Napkins
- Opportunity, naming rights to specialty drink served during cocktail hours and password.
- Includes admission for four (4) to Gathering For Hope Event.
- 1/2 Page ad in program booklet
- Corporate Sponsor recognition on event website, event invitation e-blast, event social media platforms, event signage, post-event thank you e-blast

Golden Ticket — $2,000

- Logo co-branded alongside TGI Logo on custom Golden Tickets
- Corporate Sponsor recognition on event website, Event Social Media platforms, Post-event thank you e-blast

Print — $5,000

- Prominent inside front and back ad placement in program booklet
- Includes two (2) admissions to the 2024 Gathering For Hope Event
- Corporate Sponsor recognition on event website, event invitation e-blast, event social media platforms, event signage, post-event thank you e-blast

Program Production — $7,500

- Co-branded Logo recognition on event presentation program PowerPoint slides
- Includes 4 admissions to the 2024 Gathering For Hope Event
- Full page ad in program booklet
- Prominent Corporate Sponsor recognition on event website, event invitation e-blast, event social media platforms, event signage, post-event thank you e-blast

For questions, please contact Meredith Adams, meredith@thegatheringinn.com

The Gathering Inn Celebrates 20 Years

20 Years of Reaching Out & Lifting Up
The Gathering Inn

Friday, November 15, 2024
at the
Rocklin Event Center

Sponsorship Agreement

Company Name

Contact Name

Street address/PO Box

City State Zip Code

Phone Number

Email

☐ Check Made payable to ***The Gathering Inn***

☐ Invoice

☐ Credit Card

Name on Card

Billing Address

Card Number

Exp Date CVV

Signature Date

Choose Sponsorship Level

☐ ~~Presenting~~ **SOLD OUT**	~~$20,000~~	☐ Program	$7,500	☐ Golden Ticket	$2,000
☐ Title	$10,000	☐ Speakeasy	$3,500	☐ Full Page Ad	$500
☐ Major	$5,000	☐ Coffee Station	$1,500	☐ 1/2 Page Ad	$250
☐ Hope	$3,000	☐ Print	$5,000		

☐ I would like to donate_____of my seats to *Friends of The Gathering Inn*

Please send completed form to Meredith Adams, **meredith@thegatheringinn.com**

COUNCIL COMMUNICATION

CC #: 3509
File #: 0502-01

Title:	General Municipal Election November 5, 2024 - Consideration and Direction on Elections and/or Appointments for Vacancies in Districts 1 and 3
Contact:	Carmen Avalos 916-774-5269 cavalos@roseville.ca.us

Meeting Date: 8/21/2024
Item #: 9.4.

RECOMMENDATION TO COUNCIL

Receive the City Clerk's Certification of Facts that there are not more candidates than offices to be filled and choose one of the following options:
1. Adopt a resolution providing for the appointment to the office of Members of the City Council for District 1 and District 3, that were to be elected on Tuesday, November 5, 2024, and authorize canceling the election for Districts 1 and 3; or
2. Provide other direction, as determined appropriate, pursuant to California Elections Code Section 10229.

BACKGROUND

The City Council adopted Resolution No. 24-234 on June 19, 2024, Declaring, Calling, and Ordering a General Municipal Election to be held on Tuesday, November 5, 2024, to fill three (3) Council vacancies for Members of the City Council for Districts 1, 3 and 5 for four-year terms.

The nomination period began on Monday, July 15, 2024, and ended on Friday, August 9, 2024. At the close of the nomination period on August 9, 2024, only one person was nominated for each of District 1 and District 3. Tracy Mendonsa was nominated to serve a four-year term for District 1 and Bruce Houdesheldt was nominated to serve a four-year term for District 3. The City Clerk is required to submit a certificate of these facts to the City Council and inform the Council of available options as well as posting a notice of the facts and courses of action available.

Pursuant to California Elections Code Section 10229, the City Council may take one of the following courses of action:

1. Appoint to the office(s) the person(s) who have been nominated.
2. Appoint to the offices(s) any eligible voter if no one has been nominated.
3. Hold the election if either no one or only one person has been nominated.

The City Council may appoint the two nominated candidates and cancel the General Municipal

Election for Districts 1 and 3, thereby saving the City of Roseville from the costs of conducting those elections. The election for office for Member of the City Council in District 5, receiving more than one nominated candidate, shall continue to be conducted as previously declared, called for, and ordered.

If by August 22, 2024, the 75th day before the municipal election, the City Council fails to act and no person has been appointed to each of the offices in District 1 and District 3, respectively, then the election shall be held for all offices.

The required posting was satisfied and completed after the close of nomination on August 9, 2024, at 5:05 pm. The publication in the Sacramento Bee, a paper of general circulation was satisfied on August 15, 2024, as required by Government Code Section 6061.

FISCAL IMPACT

The FY2024-25 budget included an allocation of $190,000 for the 2024 Roseville Municipal Election. By canceling the November 5, 2024 election of Districts 1 and 3 with an appointment of the two nominated candidates, there would be a cost savings of approximately $50,000 dollars to the City's General Fund.

ENVIRONMENTAL REVIEW

The California Environmental Quality Act (CEQA) does not apply to activities that will not result in a direct or reasonably foreseeable indirect physical change in the environment, or is otherwise not considered a project as defined by CEQA Statute §21065 and CEQA State Guidelines §15060(c)(3) and §15378. The adoption of a resolution and other activities described herein relating to municipal elections meets the above criteria and is not subject to CEQA. No additional environmental review is required.

CITY COUNCIL STRATEGIC PLAN/OVERARCHING GOALS

Goal B - Support community engagement and advocacy

Respectfully Submitted,

Carmen Avalos, City Clerk

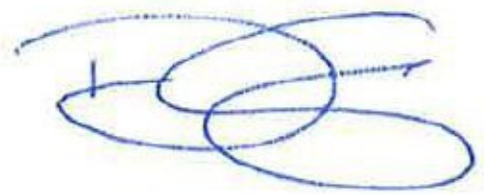

Dominick Casey, City Manager

ATTACHMENTS:

Description

Resolution 24-305

Certification of Facts

RESOLUTION 24-305

A RESOLUTION OF THE CITY COUNCIL OF THE CITY OF ROSEVILLE, COUNTY OF PLACER, STATE OF CALIFORNIA, PROVIDING FOR APPOINTMENT TO THE OFFICES OF MEMBERS OF THE CITY COUNCIL, DISTRICT 1 AND DISTRICT 3, THAT WERE TO BE ELECTED ON TUESDAY, NOVEMBER 5, 2024, AND CANCELING THE ELECTION FOR DISTRICTS 1 AND 3

WHEREAS, the City of Roseville has scheduled a General Municipal Election on November 5, 2024, to elect three (3) Members of the Roseville City Council for one (1) seat in each of three (3) districts, and a Notice of Election was published on June 28, 2024, in the Sacramento Bee and on July 12, 2024, in the Roseville Press Tribune, with notices also posted at all designated locations; and

WHEREAS, pursuant to California Elections Code Section 10229, a Certification of Facts was submitted to the City Council, informing that as of the close of the nomination period on August 9th, 2024, there were not more candidates than offices to be elected as only one (1) person was nominated to each of District 1 and District 3 and a Notice was posted at all designated locations, the City website and published on August 15, 2024, in the Sacramento Bee, a newspaper of general circulation, pursuant to law; and

WHEREAS, California Elections Code Section 10229 allows for one of the following courses of action to be taken by the City Council:

1. Appoint to the office the person who has been nominated.
2. Appoint to the office any eligible voter if no one has been nominated.
3. Hold the election if either no one or only one person has been nominated.

NOW, THEREFORE, THE CITY COUNCIL OF THE CITY OF ROSEVILLE, CALIFORNIA, HEREBY RESOLVES, DETERMINES AND ORDERS AS FOLLOWS:

SECTION 1. That pursuant to California Elections Code Section 10229, the following action is being taken:

The following persons being the only candidates for the offices for which they were nominated, are being appointed to those offices and shall qualify and take office and serve exactly as if elected at a municipal election for the office:

NAME	OFFICE	TERM
Tracy Mendonsa	Member of the City Council – District 1	4 years
Bruce Houdesheldt	Member of the City Council – District 3	4 years

SECTION 2. The City Clerk/Elections Official or designee shall not accept for filing any statement of write-in candidacy which is submitted after the appointments are made.

SECTION 3. That if an appointment to the office is made in a particular legislative district pursuant to California Elections Code Section 10229, that appointment shall not affect the conduct of the municipal election in other legislative districts of the City of Roseville.

SECTION 4. The Municipal Election scheduled to be held on Tuesday, November 5, 2024, for Districts 1 and 3 to elect a Member of the City Council in each of those districts is therefore canceled and removed from the ballot.

SECTION 5. The Municipal Election scheduled to be held on Tuesday, November 5, 2024, to elect a Member of the City Council for District 5 shall be conducted.

SECTION 6. This resolution will become effective immediately upon adoption.

SECTION 7. That the City Clerk shall certify to the passage and adoption of this resolution and forward a certified copy to the Placer County Clerk/Elections Office. The City Clerk of the City of Roseville is hereby authorized, in the discretion of the City Clerk, to do all other things determined to be necessary to carry out the purposes of this Resolution and to facilitate the election(s) and appointment(s) as described herein. The City Clerk is hereby empowered and authorized to execute, submit, file, sign, communicate, and otherwise do whatever else is necessary to effectuate the intent hereof; and the City Clerk is further directed to take all other administrative actions necessary to accomplish the orders set forth in this Resolution.

PASSED AND ADOPTED by the Council of the City of Roseville this 21st day of August 2024.

_____

Krista Bernasconi, Vice Mayor

ATTEST:

_____

Carmen Avalos, City Clerk

311 Vernon Street
Roseville, CA 95678
(916) 774-5263
www.roseville.ca.us

PUBLIC NOTICE

CITY CLERK'S CERTIFICATION THAT THERE ARE NOT MORE CANDIDATES THAN OFFICES TO BE ELECTED

I, Carmen Avalos, City Clerk/Elections Official of the City of Roseville, do hereby certify pursuant to Elections Code § 10229 the following facts relating to the General Municipal Election to be held on Tuesday, November 5, 2024:

As of the close of the nomination period on August 9, 2024, at 5:00 PM, there are not more candidates than offices to be elected and that one qualified candidate is eligible for each of the following elected office(s) for District 1 and 3 respectively.

The person(s) nominated are as follows:

Tracy Mendonsa – Member of City Council, District 1

Bruce Houdesheldt – Member of City Council, District 3

Elections Code § 10229 allows one of the following courses of action to be taken by the City Council:

1. Appoint to the office the person who has been nominated.
2. Appoint to the office any eligible voter if no one has been nominated.
3. Hold the election if either no one or only one person has been nominated.

A notice of these facts was posted on August 9, 2024, and will be published on August 15, 2024, in a newspaper of general circulation in the city (Sacramento Bee) pursuant to Government Code § 6061.

On August 21, 2024, at 6:00 pm, at a regular City Council meeting and after the fifth day following the date of publication the City Council will meet to either make the appointment(s) or direct an election to be held. The person(s) appointed, if any, shall qualify and take office and serve exactly as if elected at a municipal election for the office.

If, by the 75th day before the municipal election (August 22, 2024), no person has been appointed to the office pursuant to (1) or (2) above, the election shall be held.

If the City Council makes an appointment pursuant to Elections Code § 10229 subdivision (a) the City Clerk/Elections Official will not accept for filing any statement of write-in candidacy which is submitted after the appointment is made.

If an appointment to office(s) is made in a particular legislative district pursuant to § 10229 (a), that appointment shall not affect the conduct of the municipal election in other legislative districts of the city.

Carmen Avalos, City Clerk
Dated/ Posted: August 9, 2024 @ 5:05 PM

COUNCIL COMMUNICATION

CC #: 3507
File #: 0800-02

Title:	Roseville Municipal Code - Regional Sewer Connection Fee Adjustments
Contact:	Shane Whittington 916-774-5557 slwhittington@roseville.ca.us

Meeting Date: 8/21/2024
Item #: 10.1.

RECOMMENDATION TO COUNCIL

Staff recommends that the City Council:

1. Conduct the scheduled public hearing to receive public comment and respond to questions regarding the proposed regional sewer connection fee adjustments; and
2. Introduce for first reading an ordinance amending the Roseville Municipal Code section pertaining to the regional sewer connection fee (§14.16.080). The proposed changes are to update the regional sewer connection fee from $9,852 (after inflation adjustments pursuant to §14.16.080C) per sewer unit to $9,802 per sewer unit for new connections to the wastewater system.

BACKGROUND

Regional sewer connection fees are impact fees assessed to new developments to cover the costs associated with the additional wastewater treatment capacity necessary to support those new developments. These fees are administered by sewer units (or equivalent dwelling units) as specified in Roseville Municipal Code §14.16.100-§14.16.100.4. While South Placer Wastewater Authority (SPWA) is responsible for reevaluating and recommending the minimum Regional Connection Fee not less than once every five years, it is the responsibility of the City of Roseville to enact and enforce the minimum Regional Connection Fee.

Roseville Municipal Code §14.16.080B was last updated in May 2019 as part of Ordinance No. 6100. In April 2022, the City of Roseville contracted with IB Consulting LLC on behalf of the SPWA to conduct the Regional Wastewater Capacity Fee Study. On January 25, 2024, staff presented the initial findings to the SPWA Board (Attachment 2). Staff intended to present proposed fee adjustments on April 22, 2024, but the corresponding Board Meeting was cancelled. On June 27, 2024, the SPWA Board approved the regional sewer connection fee calculated by IB Consulting LLC (Attachment 3).

Approval of the recommended amendments to §14.16.080 accomplishes primarily three things. First, it fulfills the legal requirement to update the study at least every eight years (California Government Code §66016.5). Second, it aligns with the City's General Plan and the appropriate

level of funding necessary to support current and future wastewater treatment capacity demands. And lastly, it fulfills the City's obligation to enact and enforce the minimum Regional Connection Fee.

FISCAL IMPACT

The reduction of the Regional Sewer Connection fee will align with the projected new residential and nonresidential development in the City. Sufficient funds will be available to support capital improvement projects needed to serve new development. There is no impact to the City's utility enterprise funds or utility rates as a result of this action.

ENVIRONMENTAL REVIEW

The California Environmental Quality Act (CEQA) only applies to projects which have the potential to cause a significant effect on the environment. Where it can be seen with certainty that there is no possibility that the activity in question may have a significant effect on the environment, the activity is not subject to CEQA. (CEQA Guidelines §15061(b)(3)).

CITY COUNCIL STRATEGIC PLAN/OVERARCHING GOALS

Goal A - Remain fiscally responsible in a changing world
Goal F - Invest in well-planned infrastructure and growth

Respectfully Submitted,

Shane Whittington, Environmental Utilities Business Services Manager

Richard Plecker, Environmental Utilities Director

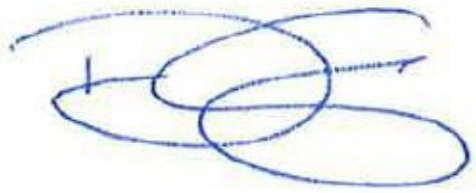

_____
Dominick Casey, City Manager

ATTACHMENTS:

Description

Attachment 1 - redlined ordinance

Attachment 2 - South Placer Wastewater Authority Regional Wastewater Capacity Fee Study - April 24, 2024

Attachment 3 - South Placer Wastewater Authority Resolution No. 2024-15- Final and Signed

ORDINANCE NO. _____

ORDINANCE OF THE COUNCIL OF THE CITY OF ROSEVILLE AMENDING SECTION 14.16.080 OF CHAPTER 14.16 OF TITLE 14 OF THE ROSEVILLE MUNICIPAL CODE REGARDING REGIONAL SEWER CONNECTION FEE

THE CITY OF ROSEVILLE ORDAINS:

SECTION 1. The section of the Roseville Municipal Code listed above is hereby amended to read as shown on Attachment "A".

SECTION 2. This ordinance shall be effective at the expiration of sixty (60) days from the date of adoption.

SECTION 3. The City Clerk is hereby directed to cause this ordinance to be published in full at least once within fourteen (14) days after it is adopted in a newspaper of general circulation in the City, or shall within fourteen (14) days after its adoption cause this ordinance to be posted in full in at least three (3) public places in the City and enter in the Ordinance Book a certificate stating the time and place of said publication by posting.

PASSED AND ADOPTED by the Council of the City of Roseville this____day of _____, 20_, by the following vote on roll call:

AYES COUNCILMEMBERS:

NOES COUNCILMEMBERS:

ABSENT COUNCILMEMBERS:

_____

MAYOR

ATTEST:

_____

City Clerk

ATTACHMENT "A"

§ 14.16.080. Regional sewer connection fee.

A. A regional sewer connection fee shall be charged in accordance with Section **14.16.010** for each sewer unit connected to the city-owned public sewer.

B. The regional sewer connection fee shall be $9,802.00~~7,854.00~~.

C. The fee established by this chapter shall be adjusted annually on July 1st by a percentage equal to the adjustment rate for the prior year for construction costs as determined by the director in the preceding June. The director's determination shall be based upon averaging the Construction Cost Index (CCI) for 20 cities and for San Francisco, as published in the Engineering News Record publication for the preceding 12 months ending in May. The resultant fee shall be rounded to the nearest dollar figure.

April 24, 2024

South Placer Wastewater Authority
Regional Wastewater Capacity Fee Study

IB Consulting, LLC

31938 Temecula Parkway, Suite A #350

Temecula, CA. 92592

TABLE OF CONTENTS

Executive Summary 3
Overview 4
Capacity Fee Methodology 5
Capacity Fee Analysis 7
Updated Capacity Fee 12
Appendix A 13
Appendix B 16

TABLES

Table 1 – Debt Service Paid-to-Date of Existing Debt Obligations 7
Table 2 – Outstanding Principal of Debt Obligations 8
Table 3 – NPV of Outstanding Interest of Debt Obligations 8
Table 4 – Reserves and Debt Proceeds Adjustments 9
Table 5 – Capacity of Pleasant Grove WTP and Expansions 10
Table 6 – Buy-In Component ($ per EDU) 10
Table 7 – Incremental Costs 11
Table 8 – Incremental Cost Component ($ per EDU) 11
Table 9 – Proposed Regional Wastewater Capacity Fee 12
Table 10 – Cashflow Pro forma – 100% of Projected EDUs 13
Table 11 – Cashflow Pro forma – 90% of Projected EDUs 16

FIGURES

Figure 1 – Capacity Fee Analysis 5
Figure 2 – Buy-In Method 6
Figure 3 – Formula for Incremental-Cost Method 6

Executive Summary

The South Placer Wastewater Authority (SPWA) engaged IB Consulting to complete a capacity fee nexus study for its regional wastewater treatment plants and expansions located in the City of Roseville. SPWA was formed in October 2000 as a Joint Powers Authority between the City of Roseville (Roseville), Placer County (County), and South Placer Municipal Utility District (SPMUD). The regional system includes two wastewater treatment plants known as Pleasant Grove Wastewater Treatment Plant (Pleasant Grove WTP) and Dry Creek Wastewater Treatment Plant (Dry Creek WTP).

SPWA completed a Master Regional Wastewater Systems Evaluation Report in 2020 (2020 System Evaluation) that identified the current capacity of each treatment plant and expansions required to accommodate future demand through Fiscal Year 2059-2060 (FY 2060) (Planning Period). Both treatment plants require expansions, identified as Pleasant Grove WTP – Phase 1 and Phase 2, and Dry Creek WTP – Phase 1 and Phase 2. Pleasant Grove WTP – Phase 1 is under construction and will be completed in 2024, and Dry Creek WTP – Phase 1 is expected to be completed in 2025. The Phase 2 expansions are expected to be completed in FY 2042 for the Pleasant Grove WTP and FY 2046 for the Dry Creek WTP.

SPWA was initially formed to build the Pleasant Grove WTP, which was necessary to accommodate future growth. Treatment plants are built in advance of growth, therefore, the Pleasant Grove WTP was debt-financed through the issuance of bonds and secured by capacity fees. Capacity fee revenue is dependent on the level of development occurring and can vary substantially each year. Therefore, the SPWA established a Rate Stabilization Reserve (RSR) equal to $50M through contributions from each member agency. The RSR provides security for the bonds and covers any shortage related to the annual debt service payments caused by development volatility. Each member agency's contribution to the RSR was proportionate to its share of future growth over the planning period. In addition, future debt is anticipated to fund Dry Creek WTP – Phase 2. This Report captures previously funded facilities financed through debt, the future expansions to each treatment plant, costs related to any debt financing, and revenues from other sources, such as grants and remaining debt proceeds.

The existing regional wastewater capacity fee is **$9,852** for a single-family residential connection, defined as one Equivalent Dwelling Unit (1 EDU)[1]. Based on our analysis, the updated regional wastewater capacity fee is **$9,802** per EDU ($50 reduction). The updated fee recovers each new EDU's proportionate share of facility costs. This Capacity Fee Study Report (Report) describes the approach, methodology, and technical analysis used to derive the updated capacity fee per EDU in compliance with California State Government Code, Section 66013 (GC 66013). GC 66013 allows an agency to charge the estimated reasonable cost to serve a new connection for which the charge is imposed. IB Consulting recommends adjusting the capacity fee yearly to keep pace with inflation by applying the Engineering News-Record Construction Cost Index (ENR). SPWA should also review its capacity charges every three to five years to capture any significant changes and ensure capacity fees remain equitable.

[1] 1 EDU = 190 gallons of flow per day

Overview

Background

SPWA was formed in October 2000 as a joint power authority between Roseville, Placer County, and SPMUD for the purpose of funding regional treatment plant facilities needed to accommodate future growth within the SPWA service area. The City, on behalf of the regional partners, owns and operates two regional wastewater treatment facilities, of which, Pleasant Grove WTP was built and financed through SPWA. Additionally, Roseville owns and operates the network of gravity sewers, pump stations, and force mains that serve customers within the City's limits, including the joint (regional) facilities that convey flow from SPWA member agencies. SPMUD owns and operates gravity sewers, pump stations, and force mains in Rocklin, Loomis, and portions of southern Placer County. Placer County owns and operates gravity sewers, pump stations, and force mains in unincorporated areas of Placer County that other agencies do not serve. SPWA completed the 2020 System Evaluation to determine updated wastewater collection and treatment capacity needs. Based on the 2020 System Evaluation, multiple expansions are required over the Planning Period for both regional treatment plants.

The Phase 1 expansions for Pleasant Grove WTP and Dry Creek WTP are underway and expected to be completed in 2024 and 2025, respectively. Each of these expansions will add three million gallons per day (3 mgd) of capacity. The Phase 2 expansions for Pleasant Grove WTP and Dry Creek WTP are expected to be required in 2040 and 2044, respectively. Pleasant Grove WTP – Phase 2 is expected to add 5.6M gpd, and Dry Creek WTP – Phase 2 is expected to add 3.5M gpd of capacity. Dry Creek WTP – Phase 2 is anticipated to be debt-financed, which is incorporated into this analysis.

Capacity Fee

A "Capacity Fee" is defined as a charge for public facilities in existence when a charge is imposed or for new facilities to be constructed in the future that benefit the person or property being charged. Capacity fees ensure new development or existing users requiring increased system capacity pay their fair share of the costs associated with the wastewater facilities.

Based on the requirements of GC 66013, capacity fees must be based on the *"reasonable cost"* to accommodate additional demand from new development or the expansion of existing connections. In addition, Proposition 26 amended the State Constitution in 2010, which redefined a "tax" as any levy, charge, or exaction of any kind imposed by a local government. However, there were seven exemptions within Proposition 26, including cost-based charges imposed as a requirement for service (i.e., capacity fees) so long as a reasonable relationship exists between the fees and cost of facilities. Therefore, the nexus study summarized in this Report connects the costs of facilities, the capacity of the Pleasant Grove WTP treatment plant, the increased capacity gained from the expansions, and the updated proposed fee in compliance with the Proposition 26 exemption.

Capacity Fee Methodology

There are four primary steps in calculating capacity fees: (1) determine the cost of facilities and assets recoverable through capacity fees, (2) incorporate any credits or adjustments to apply towards the total infrastructure costs such as grants, existing debt obligations, unspent debt proceeds, and available funding through previously collected capacity fees, (3) identify demand or capacity related to the facilities and define the baseline requirements for a connection or equivalent dwelling unit based on planning documents, and (4) apportion the net infrastructure costs in connection to the capacity available to accommodate growth on an EDU basis, reflecting the demand placed on the system.

Figure 1 – Capacity Fee Analysis

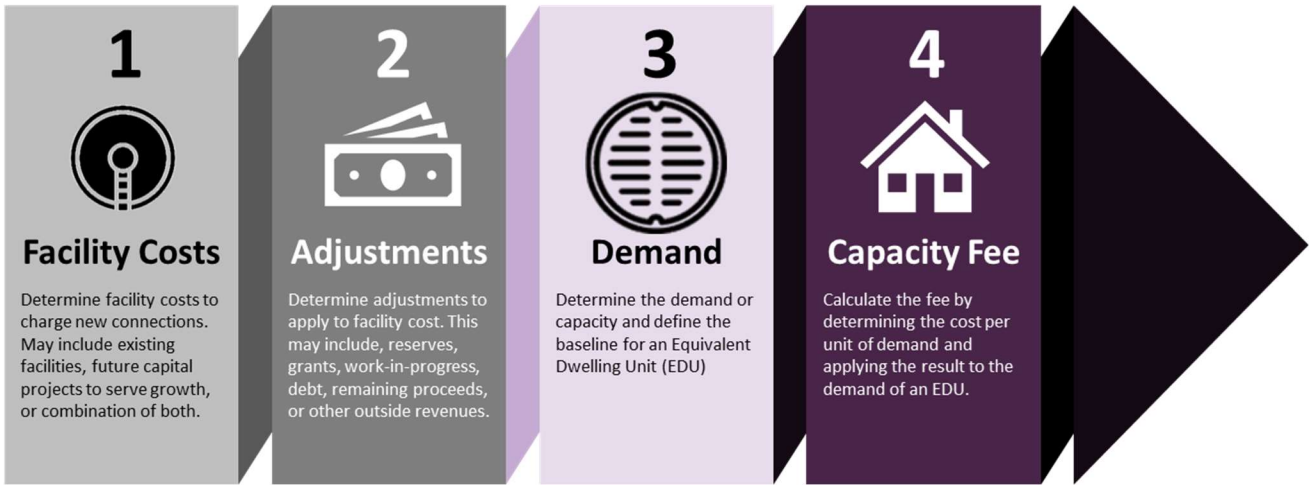

In addition to the four steps above, there are two primary approaches for calculating capacity fees: the "Buy-In Method" and "Incremental-Cost Method." Selecting the best method depends on the unique circumstances of the utility, existing facilities funded in advance of development, current and future capacity planned to be built in the system, available funding, whether future facilities will be debt-financed, expected EDUs, and access to up-to-date planning documents/Master Plans. Careful consideration may be required to allocate costs between existing and new customers and ensure no duplication of costs.

Buy-In Method

The basis of the Buy-In Method is to pay for existing facilities funded in advance of growth. This approach ensures new development and expanded connections buy into the utility system's existing facilities. For this study, only the debt associated with the Pleasant Grove WTP, which was funded through SPWA, is included. New development and in-fill connections will pay an amount equal to their fair share of the existing debt.

Once the Buy-In cost is determined, dividing the total cost by the total demand derives the buy-in amount per EDU. Demand is commonly used for system design and planning. It is a primary driver for the system's current configuration and how it expands in the future. For a wastewater treatment plant, the capacity of the existing treatment plant is commonly represented in mgd of influent. With the total Buy-In cost and capacity both known, a cost per gallon per day of capacity is derived. The cost per gallon is then multiplied by the daily flow represented by one EDU (190 gallons per day) to determine the updated Buy-In amount per EDU.

Figure **2** shows the framework for calculating capacity fees using the Buy-In Method.

Figure 2 – Buy-In Method

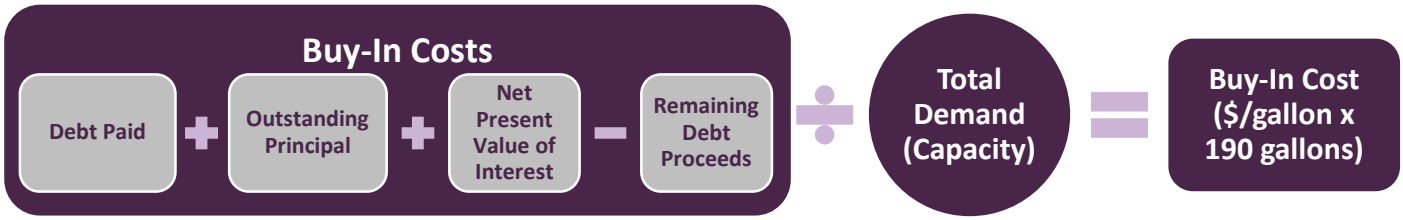

Incremental-Cost Method

The Incremental-Cost Method is based on the principle that new development should pay for improvements required to connect them to the system, including the need for any additional capacity and/or expansions. This approach is typically used when specific capital improvements are identified within planning documents and required for growth to occur. For this study, the incremental project costs are identified within SPWA's 2020 System Evaluation. Under the Incremental-Cost Method, growth-related capital improvements are allocated to new development based on their capacity requirements. Figure 3 shows the framework for calculating capacity fees using the Incremental Cost Method.

Figure 3 – Formula for Incremental-Cost Method

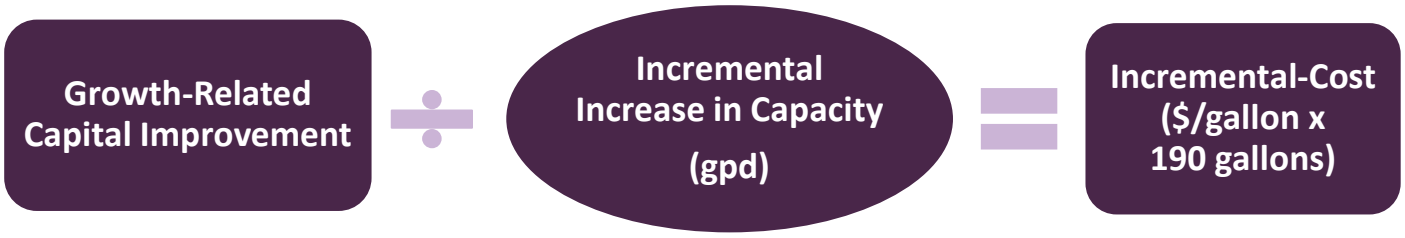

Hybrid Method

When the Buy-In Method and Incremental-Cost Method are both used to update capacity fees, this approach is commonly referred to as the Hybrid Method. For this study, the updated regional wastewater capacity fees are based on the **Hybrid Method**. The Buy-In Method will be used to capture existing facilities that were debt-financed in advance of growth and the Incremental-Cost Method will be used to capture future expansions required to accommodate future growth.

Capacity Fee Analysis

Step 1 – Buy-In Costs

For this study, the Buy-In Method is used for existing and proposed debt. The debt has been refinanced and the current outstanding debt obligations include Wastewater Revenue Bonds – Series 2017 (2017 Bonds) and Wastewater Revenue Bonds – Series 2020 (2020 Bonds). In addition, there are two recent State Revolving Fund (SRF) loans with debt payments commencing in FY 2024. The first SRF loan (CWSRF 8215-110) funded the current Pleasant Grove WTP – Phase 1 expansion and the second SRF loan (CWSRF 8215-210) funded the Energy Recovery Project (ERP). The ERP includes improvements to the Pleasant Grove WTP – Phase 1 expansion to generate its own onsite power, which also provides energy credits. These debt obligations are directly related to Pleasant Grove WTP and expansions to serve new development. In addition, the debt payments of these obligations are secured by the collections of capacity fees from new development. Therefore, these debt obligations are incorporated into this updated capacity fee study, as described below. This approach ensures that new development and expanded connections "***Buy In"*** to the existing Pleasant Grove WTP facilities by paying a proportionate share of the debt obligations. Existing debt was grouped into three separate categories: Debt Paid-to-Date, Outstanding Principal, and Outstanding Interest.

Debt Paid-to-Date: Previously paid debt of the 2017 Bonds and 2020 Bonds prior to FY 2024

Outstanding Principal: Remaining outstanding principal payments of 2017 Bonds and 2020 Bonds

Outstanding Interest: Remaining interest payment due from FY 2024 through maturity

Existing debts were grouped into these categories to ensure the costs were spread over the correct amount of system capacity. Outstanding Interest requires an additional step to derive the Net Present Value (NPV) of all future interest payments. The capacity fees must cover all future interest payments; however, interest is amortized over multiple years. Paying the total amount of future interest payments in advance without any consideration of the return on investment would overcharge new connections as these future interest payments are not yet incurred. Therefore, the NPV of interest is calculated using a discount factor equal to the average yield since 2000 of the Treasury Securities at a 3-Year Constant Maturity (Treasury Securities), equal to 2.282%. Treasury Securities are a safe and conservative return on investment for public agency investments. The NPV calculation discounts the future interest payments by 2.282%, compounded on an annual basis. The NPV of outstanding principal is not required as the principal portion of the debt is directly related to the cost of the facilities already constructed, plus debt-related issuance costs.

Table 1 identifies the amount of debt (principal and interest) paid to date prior to FY 2024 for the existing debt obligations.

Table 1 – Debt Service Paid-to-Date of Existing Debt Obligations

Debt Paid-to-Date			
Description	Value ($)	Include ?	Included Debt Paid-to-Date
(+) Principal Paid	$79,500,000	Yes	$79,500,000
(+) Interest Paid	$129,299,624	Yes	$129,299,624
Subtotal Debt Paid-to-Date	$208,799,624		$208,799,624

The capital project costs related to the existing SRF debts, and the future debt issuance are captured as part of the Incremental-Cost Component. Therefore, the principal portion of these debts are excluded to not charge new connections twice for the same cost. Table 2 identifies the amount of outstanding principal remaining for the 2017 Bonds and 2020 Bonds.

Table 2 – Outstanding Principal of Debt Obligations

Outstanding Principal			
Description	Value ($)	Include ?	Included Outstanding Principal
Wastewater Revenue Bonds, Series 2017	$63,590,000	Yes	$63,590,000
Wastewater Revenue Bonds, Series 2020	$46,920,000	Yes	$46,920,000
CWSRF 8215-210	$25,674,755	No	$0
CWSRF 8215-110	$78,347,000	No	$0
FY 2044 New/Proposed Debt	$51,020,408	No	$0
Subtotal Outstanding Principal	**$265,552,163**		**$110,510,000**

Table 3 shows the amount of outstanding interest and the net present value of the outstanding interest using the 2.282% discount factor.

Table 3 – NPV of Outstanding Interest of Debt Obligations

NPV of Outstanding Interest				
Description	Total Interest	NPV of Interest	Include ?	Included NPV of Outstanding Interest
Wastewater Revenue Bonds, Series 2017	$21,111,500	$18,565,651	Yes	$18,565,651
Wastewater Revenue Bonds, Series 2020	$23,184,000	$20,464,055	Yes	$20,464,055
CWSRF 8215-210	$5,495,628	$4,345,057	Yes	$4,345,057
CWSRF 8215-110	$16,770,013	$13,259,022	Yes	$13,259,022
FY 2044 New/Proposed Debt	$30,859,783	$16,087,471	Yes	$16,087,471
Subtotal NPV of Outstanding Interest	**$97,420,924**	**$72,721,256**		**$72,721,256**

Step 2 - Adjustments

It is important to identify any adjustments or credits to apply to the Buy-In component. An RSR was established with a minimum balance equal to $50M. Each member agency's contribution to the RSR was based on their proportionate share of future growth over the Planning Period (% of total EDUs). In addition, all capacity fee revenue is deposited into the RSR. The beginning balance of the RSR for FY 2024 was $172,105,105. If the RSR balance dips below the minimum requirement, additional contributions would be required from the SPWA member agencies. Therefore, part of our analysis for this study includes a cashflow pro forma to identify any fiscal years in which the RSR balance is below the $50M requirement. The cashflow pro forma includes the number of EDUs expected to come online based on each member agency's planning documents, revenue generated by the existing and proposed capacity fee, administration costs, future capital projects, and debt service payments. The cashflow pro forma is included as Appendix A.

In instances where the RSR is below the minimum, SPWA member agencies either need to contribute more to the RSR, or if the use of the RSR is due to planned capital projects, debt may be utilized to maintain the RSR above the minimum requirement. Based on the cashflow pro forma, the RSR would be depleted by FY 2046 when Dry Creek WTP – Phase 2 is completed. However, debt-financing $50M of Dry Creek WTP –

Phase 2 would maintain the RSR above the minimum balance, without the need for additional contributions. Over the Planning Period, the RSR is projected to have an ending balance of approximately $120M. However, if the actual EDUs planned to come online over the Planning Period is 90% of the projected EDUs, the RSR balance would drop to approximately $18M. Therefore, given the sensitivity in cashflow from a slight reduction in EDUs, the RSR will not be applied as a credit towards capital projects at this time. The RSR will continue to be used as a safeguard to cover any shortage in debt service payments. Once all projects are completed, the remaining balance could either be used to retire the debt early or refunded back to the SPWA member agencies, after all debt is retired, proportionate to their original contributions. The cashflow pro forma with reduced EDUs is included as Appendix B.

There is also $30M available in remaining debt proceeds from the 2017 Bonds. These proceeds will be spent on future capital projects and are shown as a credit. Table 4 identifies adjustments applied to the updated capacity fees.

Table 4 – Reserves and Debt Proceeds Adjustments

Capital-Related Reserves	FY 2024		
Description	Value ($)	Include ?	Reserves and Debt Proceeds
(+) Rate Stabilization Reserve	$172,105,105	No	$0
(+) Additional RSR Funding	$0	Yes	$0
(-) Remaining Debt Proceeds	$30,000,000	Yes	($30,000,000)
Subtotal Capital-Related Reserves	$202,105,105		($30,000,000)

Step 3 – System Demand/Capacity

The Pleasant Grove WTP has a current maximum capacity of 9 mgd and was originally built to accommodate growth. If the original Pleasant Grove WTP had sufficient capacity to serve the total demand over the Planning Period, the debt obligations would be divided by the 9 mgd to derive the buy-in component of the updated capacity fee. However, with the additional expansion needed to serve growth, the buy-in calculations must account not only for the existing capacity that was built, but also the additional capacity planned from the future expansions. This is necessary to ensure a new EDU is only charged for its proportional share of cost once based on the projected flow of 190 gpd.

The total design capacity of the wastewater treatment plants does not necessarily reflect the safe operating capacity. Once the plant capacity is close to 90% of total capacity, additional upgrades or expansions are required. Therefore, when deriving capacity-related unit rates, the operating capacity is used. Table 5 summarizes the total capacity and operating capacity of the treatment plant and expansions.

Table 5 – Capacity of Pleasant Grove WTP and Expansions

Treatment Plant Facilities	Total Capacity (gpd) [A]	Operating Capacity (gpd) [B] = A x 90%
Capacity - Pleasant Grove WTP	9,000,000	8,100,000
Pleasant Grove WTP - Phase 1	3,000,000	2,700,000
Pleasant Grove WTP - Phase 2	5,600,000	5,040,000
Dry Creek WTP - Phase 1	3,000,000	2,700,000
Dry Creek WTP - Phase 2	3,500,000	3,150,000
Capacity - All Expansions	15,100,000	13,590,000
Pleasant Grove WTP + Expansions	24,100,000	21,690,000

Step 4 – Buy-In Component Calculations

The previous steps identified existing and proposed debt, adjustments, and system capacity. The Buy-In component can be determined by deriving the cost per gallon of debt and adjustments. The remaining proceeds will be used to fund a portion of the planned expansions; therefore, the $30M in proceeds is spread over the total operating capacity of expansions. Debt Paid-to-Date is spread over the operating capacity of Pleasant Grove WTP + All Expansions. As part of the original issuance of bonds, the debt was secured by all future capacity fees at that point in time. Therefore, debt paid-to-date (2017 Bonds and 2020 Bonds) accounts for the original plant capacity plus the capacity of all future expansions, representing the total amount of influent from new development. The NPV of outstanding interest is the future interest payments in today's dollars covered by future connections. Therefore, the NPV of outstanding interest is spread over the operating capacity of all expansions. Table 6 summarizes the cost per gallon of credits and each debt obligation, the associated cost per EDU, and the total Buy-In amount per EDU.

Table 6 – Buy-In Component ($ per EDU)

Buy-In Component						
Buy-In Calculations	Value ($) [A]	Allocation Basis	Units of Service [B]	Unit Rate [C] = A ÷ B	Conversion Factor [D]	$ per EDU [E] = C x D
Adjustments			*gpd*	*$/gallon*	*EDU Flow (gpd)*	
(-) Remaining Debt Proceeds	($30,000,000)	All Exps @ 90% Ops Capacity	13,590,000	($2.21)	190	**($420.00)**
(+) Principal and Interest Paid to Date	$208,799,624	PG + All Exps @ 90% Ops Capacity	21,690,000	$9.63	190	**$1,830.00**
(+) Outstanding Debt Principal	$110,510,000	PG + All Exps @ 90% Ops Capacity	21,690,000	$5.09	190	**$969.00**
(+) Net Present Value of Outstanding Interest						
Wastewater Revenue Bonds, Series 2017	$18,565,651	PG + All Exps @ 90% Ops Capacity	21,690,000	$0.86	190	**$163.00**
Wastewater Revenue Bonds, Series 2020	$20,464,055	PG + All Exps @ 90% Ops Capacity	21,690,000	$0.94	190	**$180.00**
CWSRF 8215-210	$4,345,057	All Exps @ 90% Ops Capacity	13,590,000	$0.32	190	**$61.00**
CWSRF 8215-110	$13,259,022	All Exps @ 90% Ops Capacity	13,590,000	$0.98	190	**$186.00**
FY 2044 New/Proposed Debt	$16,087,471	All Exps @ 90% Ops Capacity	13,590,000	$1.18	190	**$225.00**
Buy-In Component per EDU						**$3,194.00**

Step 5 – Incremental Costs

As part of the Hybrid Method, the capacity fee includes planned capital projects required to accommodate new development based on the 2020 System Evaluation. These projects include the four treatment plant expansions, the ERP improvements, capacity-related improvements, and new buildings. The total cost of the planned capital projects equals approximately $472M, as shown in Table 7.

Table 7 – Incremental Costs

Incremental Costs	
Capital Projects	Project Cost
Pleasant Grove WWTP - Energy Recovery	$34,798,613
Pleasant Grove Electrical Expansion	$31,500,000
DCWWTP and PGWWTP Capacity Evaluation	$1,500,000
Pleasant Grove UV	$5,720,000
Dry Creek Expansion Phase 1	$16,725,000
Dry Creek Expansion Phase 2	$156,401,000
Pleasant Grove Expansion Phase 1	$77,254,600
Pleasant Grove Expansion Follow Up Projects	$1,500,000
Pleasant Grove Expansion Phase 2	$98,000,000
Regional Pump Station 26 and Force Main Capacity Improvement	$4,597,071
PGWWTP Maintenance Adminstration and Shop Building	$25,350,000
Corridors Capacity Addition	$5,400,000
Dry Creek Operations and Lab Building	$13,500,000
Total Incremental Capital Projects	**$472,246,283**

Step 6 – Incremental Component Calculations

All the incremental costs are associated with the construction of additional capacity to serve new development over the Planning Period. Therefore, each incremental project cost is spread over the operating capacity of all future expansions. Table 8 summarizes the cost per gallon of incremental capital projects, the associated cost per EDU, and the total Incremental amount per EDU.

Table 8 – Incremental Cost Component ($ per EDU)

Incremental Component						
Capital Projects	Project Cost [A]	Allocation Basis	Units of Service [B]	Unit Rate [C] = A ÷ B	Conversion Factor [D]	$ per EDU [E] = C x D
			gpd	*$/gallon*	*EDU Flow (gpd)*	
Pleasant Grove WWTP - Energy Recovery	$34,798,613	All Exps @ 90% Ops Capacity	13,590,000	$2.56	190	**$487.00**
Pleasant Grove Electrical Expansion	$31,500,000	All Exps @ 90% Ops Capacity	13,590,000	$2.32	190	**$441.00**
DCWWTP and PGWWTP Capacity Evaluation	$1,500,000	All Exps @ 90% Ops Capacity	13,590,000	$0.11	190	**$21.00**
Pleasant Grove UV	$5,720,000	All Exps @ 90% Ops Capacity	13,590,000	$0.42	190	**$80.00**
Dry Creek Expansion Phase 1	$16,725,000	All Exps @ 90% Ops Capacity	13,590,000	$1.23	190	**$234.00**
Dry Creek Expansion Phase 2	$156,401,000	All Exps @ 90% Ops Capacity	13,590,000	$11.51	190	**$2,187.00**
Pleasant Grove Expansion Phase 1	$77,254,600	All Exps @ 90% Ops Capacity	13,590,000	$5.68	190	**$1,081.00**
Pleasant Grove Expansion Follow Up Projects	$1,500,000	All Exps @ 90% Ops Capacity	13,590,000	$0.11	190	**$21.00**
Pleasant Grove Expansion Phase 2	$98,000,000	All Exps @ 90% Ops Capacity	13,590,000	$7.21	190	**$1,371.00**
Regional Pump Station 26 and Force Main Capacity Improvement	$4,597,071	All Exps @ 90% Ops Capacity	13,590,000	$0.34	190	**$65.00**
PGWWTP Maintenance Adminstration and Shop Building	$25,350,000	All Exps @ 90% Ops Capacity	13,590,000	$1.87	190	**$355.00**
Corridors Capacity Addition	$5,400,000	All Exps @ 90% Ops Capacity	13,590,000	$0.40	190	**$76.00**
Dry Creek Operations and Lab Building	$13,500,000	All Exps @ 90% Ops Capacity	13,590,000	$0.99	190	**$189.00**
Total Incremental Capital Projects	**$472,246,283**					**$6,608.00**

Updated Capacity Fee

Table 9 summarizes the updated regional wastewater capacity fee per EDU by combining the Buy-In and the Incremental components. The updated regional wastewater capacity fee reflects a $50 reduction per EDU from the current capacity fee. Non-residential connections will be assigned EDUs on a case-by-case basis to account for total flow and strength loading in relation to a single-family residential unit.

Table 9 – Proposed Regional Wastewater Capacity Fee

Proposed Regional Wastewater Capacity Fee	
System Buy-In Component	**$ per EDU**
Wastewater Infrastructure	
(-) Remaining Debt Proceeds	($420)
(+) Principal and Interest Paid to Date	$1,830
(+) Outstanding Debt Principal	$969
(+) Net Present Value of Outstanding Interest	
Wastewater Revenue Bonds, Series 2017	$163
Wastewater Revenue Bonds, Series 2020	$180
CWSRF 8215-210	$61
CWSRF 8215-110	$186
FY 2044 New/Proposed Debt	$225
Total System Buy-In Component	**$3,194**
Incremental-Cost Component	**$ per EDU**
Pleasant Grove WWTP - Energy Recovery	$487
Pleasant Grove Electrical Expansion	$441
DCWWTP and PGWWTP Capacity Evaluation	$21
Pleasant Grove UV	$80
Dry Creek Expansion Phase 1	$234
Dry Creek Expansion Phase 2	$2,187
Pleasant Grove Expansion Phase 1	$1,081
Pleasant Grove Expansion Follow Up Projects	$21
Pleasant Grove Expansion Phase 2	$1,371
Regional Pump Station 26 and Force Main Capacity Improvement	$65
PGWWTP Maintenance Adminstration and Shop Building	$355
Corridors Capacity Addition	$76
Dry Creek Operations and Lab Building	$189
Total Incremental Capital Projects	**$6,608**
Total Regional Wastewater Capacity Fee	**$9,802**

In conjunction with adopting the updated regional wastewater capacity fee, IB Consulting recommends SPWA adjust the capacity fees each year by applying the annual percentage change in the ENR to keep pace with inflation, coupled with a comprehensive update every five years.

Appendix A

Table 10 – Cashflow Pro forma – 100% of Projected EDUs

Cashflow Pro forma Key Assumptions			FY 2024	FY 2025	FY 2026	FY 2027	FY 2028	FY 2029	FY 2030	FY 2031	FY 2032	FY 2033	FY 2034	FY 2035	FY 2036	FY 2037	FY 2038
Revenue Escalation																	
Reserve Interest			1.0%	1.0%	1.0%	1.0%	1.0%	1.0%	1.0%	1.0%	1.0%	1.0%	1.0%	1.0%	1.0%	1.0%	1.0%
Expenditure Escalation																	
General Costs			3.5%	3.5%	3.5%	3.5%	3.5%	3.5%	3.5%	3.5%	3.5%	3.5%	3.5%	3.5%	3.5%	3.5%	3.5%
Capital Costs			3.9%	3.9%	3.9%	3.9%	3.9%	3.9%	3.9%	3.9%	3.9%	3.9%	3.9%	3.9%	3.9%	3.9%	3.9%
Cumulative Inflationary Factor		2024	103.9%	108.0%	112.3%	116.7%	121.3%	126.0%	131.0%	136.2%	141.5%	147.1%	152.9%	158.9%	165.1%	171.6%	178.4%
New Debt Proceeds			$0	$0	$0	$0	$0	$0	$0	$0	$0	$0	$0	$0	$0	$0	$0
Projected Capacity Fee Revenues	% of Planned EDUs		FY 2024	FY 2025	FY 2026	FY 2027	FY 2028	FY 2029	FY 2030	FY 2031	FY 2032	FY 2033	FY 2034	FY 2035	FY 2036	FY 2037	FY 2038
Proposed Capacity Fee			$9,802	$10,188	$10,588	$11,005	$11,438	$11,888	$12,355	$12,841	$13,346	$13,871	$14,417	$14,984	$15,573	$16,186	$16,822
Roseville EDUs																	
Additional Residential EDUs	100.0%		1,763	1,763	1,038	1,038	912	912	912	912	912	0	0	0	0	0	0
Additional Commercial EDUs	100.0%		0	0	1,358	1,358	1,358	1,358	1,358	1,358	1,358	1,358	1,358	1,358	0	0	0
Total Additional Roseville EDUs			1,763	1,763	2,396	2,396	2,270	2,270	2,270	2,270	2,270	1,358	1,358	1,358	0	0	0
Roseville Capacity Fee Revenue			$17,280,926	$17,960,664	$25,369,520	$26,367,420	$25,963,429	$26,984,689	$28,046,120	$29,149,303	$30,295,878	$18,837,047	$19,577,994	$20,348,087	$0	$0	$0
Placer County EDUs																	
Additional Residential EDUs	100.0%		413	510	413	463	463	463	462	510	480	530	530	580	580	580	643
Additional Commercial EDUs	100.0%		18	86	86	94	94	94	94	130	130	165	165	227	222	297	292
Total Additional Placer County EDUs			431	596	499	557	557	557	556	640	610	695	695	807	802	877	935
Placer County Capacity Fee Revenue			$4,224,662	$6,071,784	$5,283,552	$6,129,655	$6,370,762	$6,621,353	$6,869,446	$8,218,306	$8,141,183	$9,640,462	$10,019,666	$12,091,978	$12,489,744	$14,194,959	$15,729,015
SPMUD EDUs																	
Additional Residential EDUs	100.0%		343	343	273	273	273	273	273	273	273	273	273	273	273	273	273
Additional Commercial EDUs	100.0%		0	0	0	0	0	0	0	0	0	0	0	0	0	0	0
Total Additional SPMUD EDUs			343	343	273	273	273	273	273	273	273	273	273	273	273	273	273
SPMUD Capacity Fee Revenue			$3,362,086	$3,494,332	$2,890,601	$3,004,301	$3,122,474	$3,245,295	$3,372,948	$3,505,621	$3,643,513	$3,786,829	$3,935,782	$4,090,595	$4,251,496	$4,418,727	$4,592,536
Total EDUs			2,537	2,702	3,168	3,226	3,100	3,100	3,099	3,183	3,153	2,326	2,326	2,438	1,075	1,150	1,208
Total Capacity Fee Revenue			$24,867,674	$27,526,780	$33,543,673	$35,501,376	$35,456,665	$36,851,338	$38,288,514	$40,873,229	$42,080,574	$32,264,339	$33,533,443	$36,530,659	$16,741,241	$18,613,686	$20,321,551
Rate Stabilization Reserve			FY 2024	FY 2025	FY 2026	FY 2027	FY 2028	FY 2029	FY 2030	FY 2031	FY 2032	FY 2033	FY 2034	FY 2035	FY 2036	FY 2037	FY 2038
Beginning Fund Balance			**$172,105,105**	**$198,854,720**	**$190,975,806**	**$185,769,685**	**$173,868,872**	**$195,217,232**	**$218,165,053**	**$244,980,025**	**$274,987,153**	**$306,351,536**	**$327,995,932**	**$350,973,131**	**$377,018,680**	**$383,259,953**	**$390,611,312**
Funding Sources																	
Projected Capacity Fee Revenue			$24,867,674	$27,526,780	$33,543,673	$35,501,376	$35,456,665	$36,851,338	$38,288,514	$40,873,229	$42,080,574	$32,264,339	$33,533,443	$36,530,659	$16,741,241	$18,613,686	$20,321,551
Remaining Proceeds			$30,000,000	$0	$0	$0	$0	$0	$0	$0	$0	$0	$0	$0	$0	$0	$0
New Debt Proceeds			$0	$0	$0	$0	$0	$0	$0	$0	$0	$0	$0	$0	$0	$0	$0
SRF Loan Funding			$12,408,755	$10,552,353	$0	$0	$0	$0	$0	$0	$0	$0	$0	$0	$0	$0	$0
Grants/Other Funding			$0	$0	$0	$0	$0	$0	$0	$0	$0	$0	$0	$0	$0	$0	$0
Total Funding Sources			$67,276,429	$38,079,133	$33,543,673	$35,501,376	$35,456,665	$36,851,338	$38,288,514	$40,873,229	$42,080,574	$32,264,339	$33,533,443	$36,530,659	$16,741,241	$18,613,686	$20,321,551
Revenue Requirements																	
Administrative Costs			$269,366	$278,906	$288,783	$299,010	$309,600	$320,564	$331,917	$343,672	$355,843	$368,446	$381,494	$395,005	$408,994	$423,479	$438,476
Incremental CIP		*Escalate Costs?*															
Pleasant Grove WWTP - Energy Recovery		Yes	$738,491	$0	$0	$0	$0	$0	$0	$0	$0	$0	$0	$0	$0	$0	$0
Pleasant Grove Electrical Expansion		Yes	$5,196,673	$10,802,164	$0	$19,253,312	$0	$0	$0	$0	$0	$0	$0	$0	$0	$0	$0
DCWWTP and PGWWTP Capacity Evaluation		Yes	$916,166	$0	$0	$0	$0	$0	$0	$0	$0	$0	$0	$0	$0	$0	$0
Pleasant Grove UV		Yes	$5,029,525	$0	$0	$0	$0	$0	$0	$0	$0	$0	$0	$0	$0	$0	$0
Dry Creek Expansion Phase 1		Yes	$4,157,338	$13,745,753	$0	$0	$0	$0	$0	$0	$0	$0	$0	$0	$0	$0	$0
Dry Creek Expansion Phase 2		Yes	$0	$0	$0	$0	$0	$0	$0	$0	$0	$0	$0	$0	$0	$0	$0
Pleasant Grove Expansion Phase 1		Yes	$1,455,278	$0	$0	$0	$0	$0	$0	$0	$0	$0	$0	$0	$0	$0	$0
Pleasant Grove Expansion Follow Up Projects		Yes	$1,559,002	$0	$0	$0	$0	$0	$0	$0	$0	$0	$0	$0	$0	$0	$0
Pleasant Grove Expansion Phase 2		Yes	$0	$0	$0	$0	$0	$0	$0	$0	$0	$0	$0	$0	$0	$0	$0
Regional Pump Station 26 and Force Main Capacity Improvement		Yes	$1,039,335	$3,395,469	$0	$0	$0	$0	$0	$0	$0	$0	$0	$0	$0	$0	$0
PGWWTP Maintenance Administration and Shop Building		Yes	$623,601	$0	$13,472,474	$14,002,408	$0	$0	$0	$0	$0	$0	$0	$0	$0	$0	$0
Corridors Capacity Addition		Yes	$5,612,407	$0	$0	$0	$0	$0	$0	$0	$0	$0	$0	$0	$0	$0	$0
Dry Creek Operations and Lab Building		Yes	$0	$3,780,757	$11,227,062	$0	$0	$0	$0	$0	$0	$0	$0	$0	$0	$0	$0
Existing Debt Service			$15,775,205	$15,894,455	$15,635,830	$15,636,705	$15,634,955	$15,639,580	$13,445,830	$13,109,330	$13,252,580	$13,407,455	$13,552,705	$13,711,955	$13,873,455	$14,688,955	$14,690,205
Proposed Debt			$0	$0	$0	$0	$0	$0	$0	$0	$0	$0	$0	$0	$0	$0	$0
Total Revenue Requirements			$42,372,385	$47,897,503	$40,624,149	$49,191,435	$15,944,555	$15,960,144	$13,777,747	$13,453,002	$13,608,423	$13,775,901	$13,934,199	$14,106,960	$14,282,449	$15,112,434	$15,128,681
Net Cashflow			$24,904,044	($9,818,370)	($7,080,476)	($13,690,060)	$19,512,110	$20,891,194	$24,510,767	$27,420,227	$28,472,151	$18,488,438	$19,599,244	$22,423,699	$2,458,792	$3,501,253	$5,192,870
Subtotal Rate Stabilization Reserve			$197,009,149	$189,036,350	$183,895,329	$172,079,625	$193,380,982	$216,108,425	$242,675,820	$272,400,252	$303,459,304	$324,839,975	$347,595,176	$373,396,831	$379,477,472	$386,761,206	$396,804,182
Interest Earnings			$1,845,571	$1,939,455	$1,874,356	$1,789,247	$1,836,249	$2,056,628	$2,304,204	$2,586,901	$2,892,232	$3,155,958	$3,377,956	$3,621,850	$3,782,481	$3,850,106	$3,932,077
Ending Balance			**$198,854,720**	**$190,975,806**	**$185,769,685**	**$173,868,872**	**$195,217,232**	**$218,165,053**	**$244,980,025**	**$274,987,153**	**$306,351,536**	**$327,995,932**	**$350,973,131**	**$377,018,680**	**$383,259,953**	**$390,611,312**	**$399,736,259**

Table 10 – Cashflow Pro forma – 100% of Projected EDUs (Cont.)

Cashflow Pro forma Key Assumptions			FY 2039	FY 2040	FY 2041	FY 2042	FY 2043	FY 2044	FY 2045	FY 2046	FY 2047	FY 2048	FY 2049	FY 2050	FY 2051	FY 2052
Revenue Escalation																
Reserve Interest			1.0%	1.0%	1.0%	1.0%	1.0%	1.0%	1.0%	1.0%	1.0%	1.0%	1.0%	1.0%	1.0%	1.0%
Expenditure Escalation																
General Costs			3.5%	3.5%	3.5%	3.5%	3.5%	3.5%	3.5%	3.5%	3.5%	3.5%	3.5%	3.5%	3.5%	3.5%
Capital Costs			3.9%	3.9%	3.9%	3.9%	3.9%	3.9%	3.9%	3.9%	3.9%	3.9%	3.9%	3.9%	3.9%	3.9%
Cumulative Inflationary Factor		2024	185.4%	192.7%	200.3%	208.1%	216.3%	224.8%	233.7%	242.9%	252.4%	262.4%	272.7%	283.4%	294.5%	306.1%
New Debt Proceeds			$0	$0	$0	$0	$0	$50,000,000	$0	$0	$0	$0	$0	$0	$0	$0
Projected Capacity Fee Revenues	% of Planned EDUs		FY 2039	FY 2040	FY 2041	FY 2042	FY 2043	FY 2044	FY 2045	FY 2046	FY 2047	FY 2048	FY 2049	FY 2050	FY 2051	FY 2052
Proposed Capacity Fee			$17,484	$18,172	$18,887	$19,630	$20,402	$21,204	$22,038	$22,905	$23,806	$24,743	$25,716	$26,727	$27,779	$28,871
Roseville EDUs																
Additional Residential EDUs	100.0%		0	0	0	0	0	0	0	0	0	0	0	0	0	0
Additional CommercialEDUs	100.0%		0	0	0	0	0	0	0	0	0	0	0	0	0	0
Total Additional Roseville EDUs			0	0	0	0	0	0	0	0	0	0	0	0	0	0
Roseville Capacity Fee Revenue			$0	$0	$0	$0	$0	$0	$0	$0	$0	$0	$0	$0	$0	$0
Placer County EDUs																
Additional Residential EDUs	100.0%		588	585	585	585	582	630	630	630	630	630	0	0	0	0
Additional CommercialEDUs	100.0%		292	292	293	288	288	283	233	233	218	218	0	0	0	0
Total Additional Placer County EDUs			880	877	878	873	870	913	863	863	848	848	0	0	0	0
Placer County Capacity Fee Revenue			$15,386,079	$15,936,769	$16,582,521	$17,136,640	$17,749,497	$19,359,447	$19,019,029	$19,767,134	$20,187,574	$20,981,644	$0	$0	$0	$0
SPMUD EDUs																
Additional Residential EDUs	100.0%		273	273	273	273	273	273	273	273	273	273	273	273	273	273
Additional CommercialEDUs	100.0%		0	0	0	0	0	0	0	0	0	0	0	0	0	0
Total Additional SPMUD EDUs			273	273	273	273	273	273	273	273	273	273	273	273	273	273
SPMUD Capacity Fee Revenue			$4,773,181	$4,960,933	$5,156,069	$5,358,880	$5,569,670	$5,788,750	$6,016,448	$6,253,103	$6,499,066	$6,754,704	$7,020,397	$7,296,541	$7,583,548	$7,881,843
Total EDUs			1,153	1,150	1,151	1,146	1,143	1,186	1,136	1,136	1,121	1,121	273	273	273	273
Total Capacity Fee Revenue			$20,159,261	$20,897,701	$21,738,590	$22,495,520	$23,319,166	$25,148,197	$25,035,477	$26,020,237	$26,686,640	$27,736,348	$7,020,397	$7,296,541	$7,583,548	$7,881,843
Rate Stabilization Reserve			FY 2039	FY 2040	FY 2041	FY 2042	FY 2043	FY 2044	FY 2045	FY 2046	FY 2047	FY 2048	FY 2049	FY 2050	FY 2051	FY 2052
Beginning Fund Balance			$399,736,259	$419,306,776	$376,541,442	$331,688,608	$284,544,557	$306,070,710	$257,966,738	$154,365,580	$45,882,287	$64,213,318	$83,761,269	$82,663,066	$81,808,520	$81,210,175
Funding Sources																
Projected Capacity Fee Revenue			$20,159,261	$20,897,701	$21,738,590	$22,495,520	$23,319,166	$25,148,197	$25,035,477	$26,020,237	$26,686,640	$27,736,348	$7,020,397	$7,296,541	$7,583,548	$7,881,843
Remaining Proceeds			$0	$0	$0	$0	$0	$0	$0	$0	$0	$0	$0	$0	$0	$0
New Debt Proceeds			$0	$0	$0	$0	$0	$50,000,000	$0	$0	$0	$0	$0	$0	$0	$0
SRF Loan Funding			$0	$0	$0	$0	$0	$0	$0	$0	$0	$0	$0	$0	$0	$0
Grants/Other Funding			$0	$0	$0	$0	$0	$0	$0	$0	$0	$0	$0	$0	$0	$0
Total Funding Sources			$20,159,261	$20,897,701	$21,738,590	$22,495,520	$23,319,166	$75,148,197	$25,035,477	$26,020,237	$26,686,640	$27,736,348	$7,020,397	$7,296,541	$7,583,548	$7,881,843
Revenue Requirements																
Administrative Costs			$454,005	$470,084	$486,732	$503,969	$521,818	$540,298	$559,433	$579,245	$599,759	$621,000	$642,992	$665,764	$689,342	$713,755
Incremental CIP		Escalate Costs?														
Pleasant Grove WWTP - Energy Recovery		Yes	$0	$0	$0	$0	$0	$0	$0	$0	$0	$0	$0	$0	$0	$0
Pleasant Grove Electrical Expansion		Yes	$0	$0	$0	$0	$0	$0	$0	$0	$0	$0	$0	$0	$0	$0
DCWWTP and PGWWTP Capacity Evaluation		Yes	$0	$0	$0	$0	$0	$0	$0	$0	$0	$0	$0	$0	$0	$0
Pleasant Grove UV		Yes	$0	$0	$0	$0	$0	$0	$0	$0	$0	$0	$0	$0	$0	$0
Dry Creek Expansion Phase 1		Yes	$0	$0	$0	$0	$0	$0	$0	$0	$0	$0	$0	$0	$0	$0
Dry Creek Expansion Phase 2		Yes	$0	$0	$0	$0	$0	$117,214,439	$121,825,018	$126,616,953	$0	$0	$0	$0	$0	$0
Pleasant Grove Expansion Phase 1		Yes	$0	$0	$0	$0	$0	$0	$0	$0	$0	$0	$0	$0	$0	$0
Pleasant Grove Expansion Follow Up Projects		Yes	$0	$0	$0	$0	$0	$0	$0	$0	$0	$0	$0	$0	$0	$0
Pleasant Grove Expansion Phase 2		Yes	$0	$62,942,816	$65,418,645	$67,991,859	$0	$0	$0	$0	$0	$0	$0	$0	$0	$0
Regional Pump Station 2B and Force Main Capacity Improvement		Yes	$0	$0	$0	$0	$0	$0	$0	$0	$0	$0	$0	$0	$0	$0
PGWWTP Maintenance Administration and Shop Building		Yes	$0	$0	$0	$0	$0	$0	$0	$0	$0	$0	$0	$0	$0	$0
Corridors Capacity Addition		Yes	$0	$0	$0	$0	$0	$0	$0	$0	$0	$0	$0	$0	$0	$0
Dry Creek Operations and Lab Building		Yes	$0	$0	$0	$0	$0	$0	$0	$0	$0	$0	$0	$0	$0	$0
Existing Debt Service			$4,209,580	$4,209,580	$4,209,580	$4,209,580	$4,209,580	$4,209,580	$4,209,580	$4,209,580	$4,209,580	$4,209,580	$4,209,580	$4,209,580	$4,209,580	$4,209,580
Proposed Debt			$0	$0	$0	$0	$0	$4,094,010	$4,094,010	$4,094,010	$4,094,010	$4,094,010	$4,094,010	$4,094,010	$4,094,010	$4,094,010
Total Revenue Requirements			$4,663,585	$67,622,479	$70,114,956	$72,705,408	$4,731,397	$126,058,326	$130,688,040	$135,499,787	$8,903,348	$8,924,589	$8,946,582	$8,969,353	$8,992,932	$9,017,345
Net Cashflow			$15,495,676	($46,724,778)	($48,376,366)	($50,209,888)	$18,587,769	($50,910,129)	($105,652,563)	($109,479,551)	$17,783,292	$18,811,759	($1,926,185)	($1,672,812)	($1,409,384)	($1,135,501)
Subtotal Rate Stabilization Reserve			$415,231,935	$372,581,998	$328,165,076	$281,478,720	$303,132,326	$255,160,582	$152,314,175	$44,886,029	$63,665,579	$83,025,077	$81,835,084	$80,990,254	$80,399,137	$80,074,674
Interest Earnings			$4,074,841	$3,959,444	$3,523,533	$3,065,837	$2,938,384	$2,806,156	$2,051,405	$996,258	$547,739	$736,192	$827,982	$818,267	$811,038	$806,424
Ending Balance			**$419,306,776**	**$376,541,442**	**$331,688,608**	**$284,544,557**	**$306,070,710**	**$257,966,738**	**$154,365,580**	**$45,882,287**	**$64,213,318**	**$83,761,269**	**$82,663,066**	**$81,808,520**	**$81,210,175**	**$80,881,098**

Table 10 – Cashflow Pro forma – 100% of Projected EDUs (Cont.)

Cashflow Pro forma Key Assumptions			FY 2053	FY 2054	FY 2055	FY 2056	FY 2057	FY 2058	FY 2059	FY 2060
Revenue Escalation										
Reserve Interest			1.0%	1.0%	1.0%	1.0%	1.0%	1.0%	1.0%	1.0%
Expenditure Escalation										
General Costs			3.5%	3.5%	3.5%	3.5%	3.5%	3.5%	3.5%	3.5%
Capital Costs			3.9%	3.9%	3.9%	3.9%	3.9%	3.9%	3.9%	3.9%
Cumulative Inflationary Factor		2024	318.2%	330.7%	343.7%	357.2%	371.3%	385.9%	401.0%	416.8%
New Debt Proceeds			$0	$0	$0	$0	$0	$0	$0	$0
Projected Capacity Fee Revenues	% of Planned EDUs		FY 2053	FY 2054	FY 2055	FY 2056	FY 2057	FY 2058	FY 2059	FY 2060
Proposed Capacity Fee			$30,007	$31,187	$32,414	$33,689	$35,014	$36,391	$37,823	$39,310
Roseville EDUs										
Additional Residential EDUs	100.0%		0	0	0	0	0	0	0	0
Additional CommercialEDUs	100.0%		0	0	0	0	0	0	0	0
Total Additional Roseville EDUs			0	0	0	0	0	0	0	0
Roseville Capacity Fee Revenue			$0	$0	$0	$0	$0	$0	$0	$0
Placer County EDUs										
Additional Residential EDUs	100.0%		0	0	0	0	0	0	0	0
Additional CommercialEDUs	100.0%		0	0	0	0	0	0	0	0
Total Additional Placer County EDUs			0	0	0	0	0	0	0	0
Placer County Capacity Fee Revenue			$0	$0	$0	$0	$0	$0	$0	$0
SPMUD EDUs										
Additional Residential EDUs	100.0%		273	273	273	273	273	273	273	273
Additional CommercialEDUs	100.0%		0	0	0	0	0	0	0	0
Total Additional SPMUD EDUs			273	273	273	273	273	273	273	273
SPMUD Capacity Fee Revenue			$8,191,872	$8,514,096	$8,848,994	$9,197,066	$9,558,828	$9,934,821	$10,325,603	$10,731,756
Total EDUs			273	273	273	273	273	273	273	273
Total Capacity Fee Revenue			$8,191,872	$8,514,096	$8,848,994	$9,197,066	$9,558,828	$9,934,821	$10,325,603	$10,731,756
Rate Stabilization Reserve			FY 2053	FY 2054	FY 2055	FY 2056	FY 2057	FY 2058	FY 2059	FY 2060
Beginning Fund Balance			**$80,881,098**	**$80,834,905**	**$85,316,409**	**$90,152,065**	**$95,357,690**	**$100,949,744**	**$106,945,358**	**$113,362,361**
Funding Sources										
Projected Capacity Fee Revenue			$8,191,872	$8,514,096	$8,848,994	$9,197,066	$9,558,828	$9,934,821	$10,325,603	$10,731,756
Remaining Proceeds			$0	$0	$0	$0	$0	$0	$0	$0
New Debt Proceeds			$0	$0	$0	$0	$0	$0	$0	$0
SRF Loan Funding			$0	$0	$0	$0	$0	$0	$0	$0
Grants/Other Funding			$0	$0	$0	$0	$0	$0	$0	$0
Total Funding Sources			$8,191,872	$8,514,096	$8,848,994	$9,197,066	$9,558,828	$9,934,821	$10,325,603	$10,731,756
Revenue Requirements										
Administrative Costs			$739,033	$765,206	$792,306	$820,366	$849,419	$879,501	$910,649	$942,900
Incremental CIP		*Escalate Costs?*								
Pleasant Grove WWTP - Energy Recovery		Yes	$0	$0	$0	$0	$0	$0	$0	$0
Pleasant Grove Electrical Expansion		Yes	$0	$0	$0	$0	$0	$0	$0	$0
DCWWTP and PGWWTP Capacity Evaluation		Yes	$0	$0	$0	$0	$0	$0	$0	$0
Pleasant Grove UV		Yes	$0	$0	$0	$0	$0	$0	$0	$0
Dry Creek Expansion Phase 1		Yes	$0	$0	$0	$0	$0	$0	$0	$0
Dry Creek Expansion Phase 2		Yes	$0	$0	$0	$0	$0	$0	$0	$0
Pleasant Grove Expansion Phase 1		Yes	$0	$0	$0	$0	$0	$0	$0	$0
Pleasant Grove Expansion Follow Up Projects		Yes	$0	$0	$0	$0	$0	$0	$0	$0
Pleasant Grove Expansion Phase 2		Yes	$0	$0	$0	$0	$0	$0	$0	$0
Regional Pump Station 2B and Force Main Capacity Improvement		Yes	$0	$0	$0	$0	$0	$0	$0	$0
PGWWTP Maintenance Administration and Shop Building		Yes	$0	$0	$0	$0	$0	$0	$0	$0
Corridors Capacity Addition		Yes	$0	$0	$0	$0	$0	$0	$0	$0
Dry Creek Operations and Lab Building		Yes	$0	$0	$0	$0	$0	$0	$0	$0
Existing Debt Service			$4,209,580	$0	$0	$0	$0	$0	$0	$0
Proposed Debt			$4,094,010	$4,094,010	$4,094,010	$4,094,010	$4,094,010	$4,094,010	$4,094,010	$4,094,010
Total Revenue Requirements			$9,042,622	$4,859,216	$4,886,315	$4,914,375	$4,943,428	$4,973,511	$5,004,658	$5,036,909
Net Cashflow			($850,750)	$3,654,880	$3,962,679	$4,282,691	$4,615,400	$4,961,310	$5,320,944	$5,694,847
Subtotal Rate Stabilization Reserve			$80,030,348	$84,489,785	$89,279,088	$94,434,756	$99,973,090	$105,911,054	$112,266,302	$119,057,207
Interest Earnings			$804,557	$826,623	$872,977	$922,934	$976,654	$1,034,304	$1,096,058	$1,162,098
Ending Balance			**$80,834,905**	**$85,316,409**	**$90,152,065**	**$95,357,690**	**$100,949,744**	**$105,945,358**	**$113,362,361**	**$120,219,305**

Appendix B

Table 11 – Cashflow Pro forma – 90% of Projected EDUs

Cashflow Pro forma Key Assumptions			FY 2024	FY 2025	FY 2026	FY 2027	FY 2028	FY 2029	FY 2030	FY 2031	FY 2032	FY 2033	FY 2034	FY 2035	FY 2036	FY 2037	FY 2038
Revenue Escalation																	
Reserve interest			1.0%	1.0%	1.0%	1.0%	1.0%	1.0%	1.0%	1.0%	1.0%	1.0%	1.0%	1.0%	1.0%	1.0%	1.0%
Expenditure Escalation																	
General Costs			3.5%	3.5%	3.5%	3.5%	3.5%	3.5%	3.5%	3.5%	3.5%	3.5%	3.5%	3.5%	3.5%	3.5%	3.5%
Capital Costs			3.0%	3.0%	3.0%	3.0%	3.0%	3.0%	3.0%	3.0%	3.0%	3.0%	3.0%	3.0%	3.0%	3.0%	3.0%
Cumulative Inflationary Factor		2024	103.0%	108.0%	112.3%	116.7%	121.3%	126.0%	131.0%	136.2%	141.5%	147.1%	152.9%	158.9%	165.1%	171.6%	178.4%
New Debt Proceeds			$0	$0	$0	$0	$0	$0	$0	$0	$0	$0	$0	$0	$0	$0	$0
Projected Capacity Fee Revenues			**FY 2024**	**FY 2025**	**FY 2026**	**FY 2027**	**FY 2028**	**FY 2029**	**FY 2030**	**FY 2031**	**FY 2032**	**FY 2033**	**FY 2034**	**FY 2035**	**FY 2036**	**FY 2037**	**FY 2038**
Proposed Capacity Fee			$9,802	$10,188	$10,588	$11,005	$11,438	$11,888	$12,355	$12,841	$13,346	$13,871	$14,417	$14,984	$15,573	$16,186	$16,822
Roseville EDUs																	
Additional Residential EDUs	90.0%		1,587	1,587	934	934	821	821	821	821	821	0	0	0	0	0	0
Additional CommercialEDUs	90.0%		0	0	1,223	1,223	1,223	1,223	1,223	1,223	1,223	1,223	1,223	1,223	0	0	0
Total Additional Roseville EDUs			1,587	1,587	2,157	2,157	2,044	2,044	2,044	2,044	2,044	1,223	1,223	1,223	0	0	0
Roseville Capacity Fee Revenue			$15,555,774	$16,167,654	$22,838,921	$23,737,281	$23,378,524	$24,298,108	$25,253,864	$26,247,213	$27,279,636	$16,964,440	$17,631,728	$18,325,265	$0	$0	$0
Placer County EDUs																	
Additional Residential EDUs	90.0%		372	459	372	417	417	417	416	459	432	477	477	522	522	522	579
Additional CommercialEDUs	90.0%		17	78	78	85	85	85	85	117	117	149	149	205	200	268	263
Total Additional Placer County EDUs			389	537	450	502	502	502	501	576	549	626	626	727	722	790	842
Placer County Capacity Fee Revenue			$3,812,976	$5,470,718	$4,764,726	$5,524,393	$5,741,692	$5,967,539	$6,189,915	$7,396,475	$7,327,065	$8,883,352	$9,024,908	$10,893,269	$11,243,885	$12,786,793	$14,164,525
SPMUD EDUs																	
Additional Residential EDUs	90.0%		309	309	246	246	246	246	246	246	246	246	246	246	246	246	246
Additional CommercialEDUs	90.0%		0	0	0	0	0	0	0	0	0	0	0	0	0	0	0
Total Additional SPMUD EDUs			309	309	246	246	246	246	246	246	246	246	246	246	246	246	246
SPMUD Capacity Fee Revenue			$3,028,818	$3,147,955	$2,604,717	$2,707,172	$2,813,658	$2,924,332	$3,039,359	$3,158,911	$3,283,166	$3,412,308	$3,546,529	$3,686,030	$3,831,019	$3,981,710	$4,138,329
Total EDUs			2,285	2,433	2,853	2,905	2,792	2,792	2,791	2,866	2,839	2,095	2,095	2,196	968	1,036	1,088
Total Capacity Fee Revenue			$22,397,570	$24,786,327	$30,208,365	$31,968,846	$31,933,874	$33,189,979	$34,483,138	$36,802,600	$37,889,867	$29,060,099	$30,203,165	$32,904,564	$15,074,903	$16,768,504	$18,302,854
Rate Stabilization Reserve			**FY 2024**	**FY 2025**	**FY 2026**	**FY 2027**	**FY 2028**	**FY 2029**	**FY 2030**	**FY 2031**	**FY 2032**	**FY 2033**	**FY 2034**	**FY 2035**	**FY 2036**	**FY 2037**	**FY 2038**
Beginning Fund Balance			**$172,305,105**	**$196,972,285**	**$185,714,571**	**$177,109,651**	**$161,565,985**	**$179,250,911**	**$198,358,404**	**$221,151,915**	**$248,829,780**	**$279,700,929**	**$291,798,557**	**$311,066,854**	**$330,088,115**	**$307,196,222**	**$342,282,595**
Funding Sources																	
Projected Capacity Fee Revenue			$22,397,570	$24,786,327	$30,208,365	$31,968,846	$31,933,874	$33,189,979	$34,483,138	$36,802,600	$37,889,867	$29,060,099	$30,203,165	$32,904,564	$15,074,903	$16,768,504	$18,302,854
Remaining Proceeds			$30,000,000	$0	$0	$0	$0	$0	$0	$0	$0	$0	$0	$0	$0	$0	$0
New Debt Proceeds			$0	$0	$0	$0	$0	$0	$0	$0	$0	$0	$0	$0	$0	$0	$0
SRF Loan Funding			$12,408,755	$10,552,353	$0	$0	$0	$0	$0	$0	$0	$0	$0	$0	$0	$0	$0
Grants/Other Funding			$0	$0	$0	$0	$0	$0	$0	$0	$0	$0	$0	$0	$0	$0	$0
Total Funding Sources			$64,806,325	$35,338,680	$30,208,365	$31,968,846	$31,933,874	$33,189,979	$34,483,138	$36,802,600	$37,889,867	$29,060,099	$30,203,165	$32,904,564	$15,074,903	$16,768,504	$18,302,854
Revenue Requirements																	
Administrative Costs			$266,366	$276,908	$288,783	$299,010	$309,600	$320,564	$331,917	$343,672	$355,843	$368,446	$381,494	$395,005	$408,994	$423,479	$438,476
Incremental CIP		Escalate Costs?															
Pleasant Grove WWTP - Energy Recovery		Yes	$738,491	$0	$0	$0	$0	$0	$0	$0	$0	$0	$0	$0	$0	$0	$0
Pleasant Grove Electrical Expansion		Yes	$5,196,673	$10,802,164	$0	$19,253,312	$0	$0	$0	$0	$0	$0	$0	$0	$0	$0	$0
DCWWTP and PGWWTP Capacity Evaluation		Yes	$916,166	$0	$0	$0	$0	$0	$0	$0	$0	$0	$0	$0	$0	$0	$0
Pleasant Grove I/I		Yes	$5,029,525	$0	$0	$0	$0	$0	$0	$0	$0	$0	$0	$0	$0	$0	$0
Dry Creek Expansion Phase 1		Yes	$4,157,338	$13,745,753	$0	$0	$0	$0	$0	$0	$0	$0	$0	$0	$0	$0	$0
Dry Creek Expansion Phase 2		Yes	$0	$0	$0	$0	$0	$0	$0	$0	$0	$0	$0	$0	$0	$0	$0
Pleasant Grove Expansion Phase 1		Yes	$1,455,278	$0	$0	$0	$0	$0	$0	$0	$0	$0	$0	$0	$0	$0	$0
Pleasant Grove Expansion Follow Up Projects		Yes	$1,559,032	$0	$0	$0	$0	$0	$0	$0	$0	$0	$0	$0	$0	$0	$0
Pleasant Grove Expansion Phase 2		Yes	$0	$0	$0	$0	$0	$0	$0	$0	$0	$0	$0	$0	$0	$0	$0
Regional Pump Station 26 and Force Main Capacity Improvement		Yes	$1,039,335	$3,395,469	$0	$0	$0	$0	$0	$0	$0	$0	$0	$0	$0	$0	$0
PGWWTP Maintenance Administration and Shop Building		Yes	$623,601	$0	$13,472,474	$14,002,408	$0	$0	$0	$0	$0	$0	$0	$0	$0	$0	$0
Corridors Capacity Addition		Yes	$5,612,407	$0	$0	$0	$0	$0	$0	$0	$0	$0	$0	$0	$0	$0	$0
Dry Creek Operations and Lab Building		Yes	$0	$3,780,757	$11,227,062	$0	$0	$0	$0	$0	$0	$0	$0	$0	$0	$0	$0
Existing Debt Service			$15,775,205	$15,894,455	$15,635,830	$15,636,705	$15,634,955	$15,639,580	$13,445,830	$13,109,330	$13,252,580	$13,407,455	$13,552,705	$13,711,955	$13,879,455	$14,688,955	$14,690,205
Proposed Debt			$0	$0	$0	$0	$0	$0	$0	$0	$0	$0	$0	$0	$0	$0	$0
Total Revenue Requirements			$42,372,385	$47,897,503	$40,624,149	$49,191,435	$15,944,555	$15,960,144	$13,777,747	$13,453,002	$13,608,423	$13,775,901	$13,934,199	$14,106,960	$14,288,449	$15,112,434	$15,128,681
Net Cashflow			$22,433,940	($12,558,823)	($10,415,785)	($17,222,590)	$15,989,319	$17,229,835	$20,705,390	$23,349,598	$24,281,443	$15,284,198	$16,268,966	$18,797,604	$792,454	$1,656,070	$3,174,173
Subtotal Rate Stabilization Reserve			$194,739,045	$184,413,463	$175,298,787	$159,887,062	$177,555,305	$196,480,746	$219,064,794	$244,501,513	$272,111,224	$288,985,127	$308,067,523	$329,864,458	$330,881,569	$308,852,292	$345,456,768
Interest Earnings			$1,833,221	$1,300,929	$1,805,065	$1,684,924	$1,695,606	$1,878,658	$2,087,121	$2,328,267	$2,589,705	$2,813,430	$2,999,330	$3,204,657	$3,314,653	$3,380,243	$3,438,190
Ending Balance			**$196,572,265**	**$185,714,371**	**$177,108,851**	**$161,565,986**	**$179,250,911**	**$198,359,404**	**$221,151,915**	**$246,829,780**	**$273,700,929**	**$291,798,557**	**$311,066,854**	**$333,069,115**	**$307,196,222**	**$342,282,535**	**$348,644,904**

Table 11 – Cashflow Pro forma – 90% of Projected EDUs (Cont.)

Cashflow Pro forma Key Assumptions			FY 2039	FY 2040	FY 2041	FY 2042	FY 2043	FY 2044	FY 2045	FY 2046	FY 2047	FY 2048	FY 2049	FY 2050	FY 2051	FY 2052
Revenue Escalation																
Reserve Interest			1.0%	1.0%	1.0%	1.0%	1.0%	1.0%	1.0%	1.0%	1.0%	1.0%	1.0%	1.0%	1.0%	1.0%
Expenditure Escalation																
General Costs			3.5%	3.5%	3.5%	3.5%	3.5%	3.5%	3.5%	3.5%	3.5%	3.5%	3.5%	3.5%	3.5%	3.5%
Capital Costs			3.0%	3.0%	3.0%	3.0%	3.0%	3.0%	3.0%	3.0%	3.0%	3.0%	3.0%	3.0%	3.0%	3.0%
Cumulative Inflationary Factor		2034	185.4%	192.7%	200.3%	208.1%	216.1%	224.8%	233.7%	242.9%	252.4%	262.4%	272.7%	283.4%	294.5%	306.1%
New Debt Proceeds			$0	$0	$0	$0	$0	$50,000,000	$0	$0	$0	$0	$0	$0	$0	$0
Projected Capacity Fee Revenues			**FY 2039**	**FY 2040**	**FY 2041**	**FY 2042**	**FY 2043**	**FY 2044**	**FY 2045**	**FY 2046**	**FY 2047**	**FY 2048**	**FY 2049**	**FY 2050**	**FY 2051**	**FY 2052**
Proposed Capacity Fee			$17,484	$18,172	$18,887	$19,630	$20,402	$21,204	$22,038	$22,905	$23,806	$24,743	$25,716	$26,727	$27,779	$28,871
Roseville EDUs																
Additional Residential EDUs		90.0%	0	0	0	0	0	0	0	0	0	0	0	0	0	0
Additional Commercial EDUs		90.0%	0	0	0	0	0	0	0	0	0	0	0	0	0	0
Total Additional Roseville EDUs			0	0	0	0	0	0	0	0	0	0	0	0	0	0
Roseville Capacity Fee Revenue			$0	$0	$0	$0	$0	$0	$0	$0	$0	$0	$0	$0	$0	$0
Placer County EDUs																
Additional Residential EDUs		90.0%	530	527	527	527	524	567	567	567	567	567	0	0	0	0
Additional Commercial EDUs		90.0%	263	263	264	260	260	255	210	210	197	197	0	0	0	0
Total Additional Placer County EDUs			793	790	791	787	784	822	777	777	764	764	0	0	0	0
Placer County Capacity Fee Revenue			$13,864,956	$14,355,812	$14,930,378	$15,448,494	$15,994,949	$17,429,863	$17,123,737	$17,797,292	$18,187,862	$18,901,273	$0	$0	$0	$0
SPMUD EDUs																
Additional Residential EDUs		90.0%	246	246	246	246	246	246	246	246	246	246	246	246	246	246
Additional Commercial EDUs		90.0%	0	0	0	0	0	0	0	0	0	0	0	0	0	0
Total Additional SPMUD EDUs			246	246	246	246	246	246	246	246	246	246	246	246	246	246
SPMUD Capacity Fee Revenue			$4,301,109	$4,470,291	$4,648,128	$4,828,881	$5,018,823	$5,216,236	$5,421,415	$5,634,664	$5,856,301	$6,086,656	$6,326,072	$6,574,905	$6,833,527	$7,102,320
Total EDUs			1,039	1,036	1,037	1,033	1,030	1,068	1,023	1,023	1,010	1,010	246	246	246	246
Total Capacity Fee Revenue			$18,166,064	$18,826,103	$19,585,506	$20,277,375	$21,013,772	$22,646,100	$22,545,152	$23,431,956	$24,044,163	$24,989,930	$6,326,072	$6,574,905	$6,833,527	$7,102,320
Rate Stabilization Reserve			**FY 2039**	**FY 2040**	**FY 2041**	**FY 2042**	**FY 2043**	**FY 2044**	**FY 2045**	**FY 2046**	**FY 2047**	**FY 2048**	**FY 2049**	**FY 2050**	**FY 2051**	**FY 2052**
Beginning Fund Balance			$348,844,904	$365,909,345	$330,522,020	$272,945,148	$222,984,422	$241,578,053	$190,314,548	$83,534,088	($28,533,742)	($13,392,927)	$2,672,413	$65,525	($2,328,823)	($4,488,328)
Funding Sources																
Projected Capacity Fee Revenue			$18,166,064	$18,826,103	$19,585,506	$20,277,375	$21,013,772	$22,646,100	$22,545,152	$23,431,956	$24,044,163	$24,989,930	$6,326,072	$6,574,905	$6,833,527	$7,102,320
Remaining Proceeds			$0	$0	$0	$0	$0	$0	$0	$0	$0	$0	$0	$0	$0	$0
New Debt Proceeds			$0	$0	$0	$0	$0	$50,000,000	$0	$0	$0	$0	$0	$0	$0	$0
SRF Loan Funding			$0	$0	$0	$0	$0	$0	$0	$0	$0	$0	$0	$0	$0	$0
Grants/Other Funding			$0	$0	$0	$0	$0	$0	$0	$0	$0	$0	$0	$0	$0	$0
Total Funding Sources			$18,166,064	$18,826,103	$19,585,506	$20,277,375	$21,013,772	$72,646,100	$22,545,152	$23,431,956	$24,044,163	$24,989,930	$6,326,072	$6,574,905	$6,833,527	$7,102,320
Revenue Requirements																
Administrative Costs			$454,005	$470,084	$486,732	$503,969	$521,818	$540,298	$559,433	$579,245	$599,759	$621,000	$642,993	$665,764	$689,342	$713,755
Incremental CIP		Escalate Costs?														
Pleasant Grove WWTP - Energy Recovery		Yes	$0	$0	$0	$0	$0	$0	$0	$0	$0	$0	$0	$0	$0	$0
Pleasant Grove Electrical Expansion		Yes	$0	$0	$0	$0	$0	$0	$0	$0	$0	$0	$0	$0	$0	$0
DCWWTP and PGWWTP Capacity Evaluation		Yes	$0	$0	$0	$0	$0	$0	$0	$0	$0	$0	$0	$0	$0	$0
Pleasant Grove UV		Yes	$0	$0	$0	$0	$0	$0	$0	$0	$0	$0	$0	$0	$0	$0
Dry Creek Expansion Phase 1		Yes	$0	$0	$0	$0	$0	$0	$0	$0	$0	$0	$0	$0	$0	$0
Dry Creek Expansion Phase 2		Yes	$0	$0	$0	$0	$0	$117,214,439	$121,825,018	$126,616,953	$0	$0	$0	$0	$0	$0
Pleasant Grove Expansion Phase 1		Yes	$0	$0	$0	$0	$0	$0	$0	$0	$0	$0	$0	$0	$0	$0
Pleasant Grove Expansion Follow Up Projects		Yes	$0	$0	$0	$0	$0	$0	$0	$0	$0	$0	$0	$0	$0	$0
Pleasant Grove Expansion Phase 2		Yes	$0	$62,942,816	$65,418,045	$67,991,859	$0	$0	$0	$0	$0	$0	$0	$0	$0	$0
Regional Pump Station 2G and Force Main Capacity Improvement		Yes	$0	$0	$0	$0	$0	$0	$0	$0	$0	$0	$0	$0	$0	$0
PGWWTP Maintenance Administration and Shop Building		Yes	$0	$0	$0	$0	$0	$0	$0	$0	$0	$0	$0	$0	$0	$0
Corridors Capacity Addition		Yes	$0	$0	$0	$0	$0	$0	$0	$0	$0	$0	$0	$0	$0	$0
Dry Creek Operations and Lab Building		Yes	$0	$0	$0	$0	$0	$0	$0	$0	$0	$0	$0	$0	$0	$0
Existing Debt Service			$4,209,580	$4,209,580	$4,209,580	$4,209,580	$4,209,580	$4,209,580	$4,209,580	$4,209,580	$4,209,580	$4,209,580	$4,209,580	$4,209,580	$4,209,580	$4,209,580
Proposed Debt			$0	$0	$0	$0	$0	$4,094,010	$4,094,010	$4,094,010	$4,094,010	$4,094,010	$4,094,010	$4,094,010	$4,094,010	$4,094,010
Total Revenue Requirements			$4,663,585	$67,622,479	$70,114,356	$72,705,408	$4,731,397	$126,058,326	$130,688,040	$135,499,787	$8,903,348	$8,924,589	$8,946,582	$8,969,353	$8,992,932	$9,017,345
Net Cashflow			$13,502,479	($48,796,376)	($50,529,450)	($52,428,033)	$16,282,375	($53,412,226)	($108,142,888)	($112,067,831)	$15,140,814	$16,065,341	($2,620,510)	($2,394,448)	($2,159,405)	($1,915,024)
Subtotal Rate Stabilization Reserve			$362,347,384	$317,106,969	$269,992,570	$220,517,111	$238,266,797	$188,165,827	$82,171,658	($28,533,742)	($13,392,927)	$2,672,413	$51,904	($2,328,823)	($4,488,328)	($6,403,352)
Interest Earnings			$3,555,961	$3,415,052	$2,952,573	$2,467,311	$2,311,256	$2,148,719	$1,362,431	$0	$0	$0	$13,622	$0	$0	$0
Ending Balance			**$365,903,345**	**$320,522,020**	**$272,945,143**	**$222,984,422**	**$241,578,053**	**$190,314,546**	**$83,534,088**	**($28,533,742)**	**($13,392,927)**	**$2,672,413**	**$65,525**	**($2,328,823)**	**($4,488,328)**	**($6,403,352)**

Table 11 – Cashflow Pro forma – 90% of Projected EDUs (Cont.)

Cashflow Pro forma Key Assumptions			FY 2053	FY 2054	FY 2055	FY 2056	FY 2057	FY 2058	FY 2059	FY 2060
Revenue Escalation										
Reserve Interest			1.0%	1.0%	1.0%	1.0%	1.0%	1.0%	1.0%	1.0%
Expenditure Escalation										
General Costs			3.5%	3.5%	3.5%	3.5%	3.5%	3.5%	3.5%	3.5%
Capital Costs			3.0%	3.0%	3.0%	3.0%	3.0%	3.0%	3.0%	3.0%
Cumulative Inflationary Factor		2034	318.2%	330.7%	343.7%	357.2%	371.3%	385.9%	401.0%	416.8%
New Debt Proceeds			$0	$0	$0	$0	$0	$0	$0	$0
Projected Capacity Fee Revenues			**FY 2053**	**FY 2054**	**FY 2055**	**FY 2056**	**FY 2057**	**FY 2058**	**FY 2059**	**FY 2060**
Proposed Capacity Fee			$30,007	$31,187	$32,414	$33,689	$35,014	$36,391	$37,823	$39,310
Roseville EDUs										
Additional Residential EDUs		90.0%	0	0	0	0	0	0	0	0
Additional Commercial EDUs		90.0%	0	0	0	0	0	0	0	0
Total Additional Roseville EDUs			0	0	0	0	0	0	0	0
Roseville Capacity Fee Revenue			$0	$0	$0	$0	$0	$0	$0	$0
Placer County EDUs										
Additional Residential EDUs		90.0%	0	0	0	0	0	0	0	0
Additional Commercial EDUs		90.0%	0	0	0	0	0	0	0	0
Total Additional Placer County EDUs			0	0	0	0	0	0	0	0
Placer County Capacity Fee Revenue			$0	$0	$0	$0	$0	$0	$0	$0
SPMUD EDUs										
Additional Residential EDUs		90.0%	246	246	246	246	246	246	246	246
Additional Commercial EDUs		90.0%	0	0	0	0	0	0	0	0
Total Additional SPMUD EDUs			246	246	246	246	246	246	246	246
SPMUD Capacity Fee Revenue			$7,381,687	$7,672,043	$7,973,829	$8,287,466	$8,613,450	$8,952,256	$9,304,389	$9,670,173
Total EDUs			246	246	246	246	246	246	246	246
Total Capacity Fee Revenue			$7,381,687	$7,672,043	$7,973,829	$8,287,466	$8,613,450	$8,952,256	$9,304,389	$9,670,173
Rate Stabilization Reserve			**FY 2053**	**FY 2054**	**FY 2055**	**FY 2056**	**FY 2057**	**FY 2058**	**FY 2059**	**FY 2060**
Beginning Fund Balance			**($6,408,352)**	**($8,064,287)**	**($5,251,460)**	**($2,163,957)**	**$1,209,134**	**$4,909,587**	**$8,957,382**	**$13,388,135**
Funding Sources										
Projected Capacity Fee Revenue			$7,381,687	$7,672,043	$7,973,829	$8,287,466	$8,613,450	$8,952,256	$9,304,389	$9,670,173
Remaining Proceeds			$0	$0	$0	$0	$0	$0	$0	$0
New Debt Proceeds			$0	$0	$0	$0	$0	$0	$0	$0
SRF Loan Funding			$0	$0	$0	$0	$0	$0	$0	$0
Grants/Other Funding			$0	$0	$0	$0	$0	$0	$0	$0
Total Funding Sources			$7,381,687	$7,672,043	$7,973,829	$8,287,466	$8,613,450	$8,952,256	$9,304,389	$9,670,173
Revenue Requirements										
Administrative Costs			$739,033	$765,308	$792,508	$820,366	$849,419	$879,501	$910,649	$942,900
Incremental CIP		Escalate Costs?								
Pleasant Grove WWTP - Energy Recovery		Yes	$0	$0	$0	$0	$0	$0	$0	$0
Pleasant Grove Electrical Expansion		Yes	$0	$0	$0	$0	$0	$0	$0	$0
DCWWTP and PGWWTP Capacity Evaluation		Yes	$0	$0	$0	$0	$0	$0	$0	$0
Pleasant Grove UV		Yes	$0	$0	$0	$0	$0	$0	$0	$0
Dry Creek Expansion Phase 1		Yes	$0	$0	$0	$0	$0	$0	$0	$0
Dry Creek Expansion Phase 2		Yes	$0	$0	$0	$0	$0	$0	$0	$0
Pleasant Grove Expansion Phase 1		Yes	$0	$0	$0	$0	$0	$0	$0	$0
Pleasant Grove Expansion Follow Up Projects		Yes	$0	$0	$0	$0	$0	$0	$0	$0
Pleasant Grove Expansion Phase 2		Yes	$0	$0	$0	$0	$0	$0	$0	$0
Regional Pump Station 2S and Force Main Capacity Improvement		Yes	$0	$0	$0	$0	$0	$0	$0	$0
PGWWTP Maintenance Administration and Shop Building		Yes	$0	$0	$0	$0	$0	$0	$0	$0
Corridors Capacity Addition		Yes	$0	$0	$0	$0	$0	$0	$0	$0
Dry Creek Operations and Lab Building		Yes	$0	$0	$0	$0	$0	$0	$0	$0
Existing Debt Service			$4,209,580	$0	$0	$0	$0	$0	$0	$0
Proposed Debt			$4,094,010	$4,094,010	$4,094,010	$4,094,010	$4,094,010	$4,094,010	$4,094,010	$4,094,010
Total Revenue Requirements			$9,042,622	$4,859,318	$4,886,518	$4,914,376	$4,943,428	$4,973,511	$5,004,658	$5,036,909
Net Cashflow			($1,660,935)	$2,812,827	$3,087,304	$3,373,091	$3,670,021	$3,978,745	$4,299,731	$4,633,464
Subtotal Rate Stabilization Reserve			($8,064,287)	($5,251,460)	($2,163,957)	$1,209,134	$4,879,155	$8,888,342	$13,257,063	$18,001,599
Interest Earnings			$0	$0	$0	$0	$30,441	$68,990	$111,072	$156,849
Ending Balance			**($8,064,287)**	**($5,251,460)**	**($2,163,957)**	**$1,209,134**	**$4,909,587**	**$8,957,382**	**$13,388,135**	**$18,158,448**

SOUTH PLACER WASTEWATER AUTHORITY

RESOLUTION NO. 2024-15

RESOLUTION OF THE BOARD OF DIRECTORS OF THE SOUTH PLACER WASTEWATER AUTHORITY APPROVING NEW CAPACITY FEE EFFECTIVE JULY 1, 2024

NOW, THEREFORE, BE IT RESOLVED, the Board of Directors for the South Placer Wastewater Authority ("Authority") hereby approves a capacity fee in the amount of $9,802.00 effective July 1, 2024, which fee shall be subject to annual adjustments based on the Engineering News-Record Construction Cost Index.

PASSED AND ADOPTED this 27th day of June 2024, by the following vote:

AYES: Alvord, Gore, Landon, Roccucci, Willaims

NOES: None

ABSENT: None

ABSTAIN: None

Chairperson

ATTEST:

Secretary