Roseville Electric Building,
116 S. Grant Street, 1st Floor

roseville.ca.us

The City of Roseville welcomes your participation.

Meeting Schedule: Regular meetings of the City Council are held on the first and third Wednesday of each month at 6:00 p.m.

Two Public Comment Periods for Non-Agenda Items: A total of twenty-five (25) minutes is allotted for public comments. At the beginning and end of the meeting, each speaker has three (3) minutes to address the Mayor/Chair on issues that are not listed on the agenda and are within the City's jurisdiction. Please submit a yellow speaker card to the City Clerk before the item is heard if you wish to make a comment. You will still have an opportunity to comment if you haven't filled out a yellow speaker card.

Brown Act: The City Council cannot discuss or act on items not listed on the agenda. Public Comment on Agenda Items: Each speaker has five (5) minutes to address items that are listed on the agenda.

Levine Act Provisions: If you've made a campaign contribution totaling more than $500 ($250 prior to January 1, 2025) to City Council Members in the last twelve (12) months, you must disclose it before addressing an item on the agenda. Please visit Levine Act – City of Roseville for updated forms and information.

Audio/Visual Presentations: If making a presentation regarding an agenda item, audio/visual materials must be submitted to the City Clerk for consideration at least 72 hours in advance.

Americans with Disabilities Act: If special assistance is required to participate in a meeting, including the need of auxiliary aids or services, please notify the City Clerk at least 72 hours in advance of the meeting. City Clerk 311 Vernon Street cityclerkroseville@roseville.ca.us 916-774-5263 TDD: 916-774-5220

Security Measures: All meeting attendees must successfully pass through a security metal detector. Any person with a prohibited item will not be allowed entry. Prohibited items include but are not limited to firearms (even with valid CCW), knives, pepper spray/mace, explosives of any kind/any weapons and/or dangerous devices of any kind, illegal drugs, and alcohol.

Viewing Options: The City of Roseville provides three options for viewing meetings:



Krista Bernasconi, Mayor
Karen Alvord, Vice Mayor
Bruce Houdesheldt, Councilmember
Tracy Mendonsa, Councilmember
Pauline Roccucci, Councilmember
Dominick Casey, City Manager
Michelle Sheidenberger, City Attorney
Carmen Avalos, City Clerk

AGENDA

City Council Regular Meeting
March 4, 2026
6:00 PM
Roseville Electric Building,
116 S. Grant Street, 1st Floor

I. CALL TO ORDER

II. ROLL CALL

III. PLEDGE OF ALLEGIANCE

IV. MEETING PROCEDURES

V. PRESENTATIONS

1. Proclamation - California Arbor Week

Summary: Proclaim March 7-14, 2026 as California Arbor Week and urge all residents to observe and celebrate the week by planting trees for our benefit and for the benefit of future generations.

CONTACT: Arleta Wagenhals 916-774-5200 amswagenhals@roseville.ca.us

VI. PUBLIC COMMENTS

This is the first opportunity to make a public comment on non-agenda items.

VII. CONSENT CALENDAR

2. Resolution Declaring Public Weeds and Rubbish a Public Nuisance - Setting a Public Hearing Date (FIRE DEPARTMENT)

Summary: Staff recommends approval of a resolution declaring weeds, rubbish, dirt, and/or rank growth within the City to be a public nuisance, as well as ordering the Fire Chief to give notice of the passage and setting a time and place for the required public hearing. The public hearing will be scheduled for the City Council meeting on Wednesday, April 15, 2026. Owners of private parcels that are abated by the City are responsible for the costs associated with providing abatement services. This item has no fiscal impact on the General Fund.

CONTACT: Jordan Paul 916-774-5802 jpaul@roseville.ca.us

The City Council will consider the recommendation to:

a. Adopt Resolution No. 26-045 declaring all weeds, dirt, rubbish, and/or rank growths within the City of Roseville to be a nuisance; ordering the Fire Chief to give notice of the passage of this resolution; and setting a time and place for hearing any objections to the proposed destruction or removal of such weeds, dirt, rubbish, or rank growths.

3. **Aquifer Storage Recovery Well and Pump Station Design Project - Professional Design Services Agreement Amendment and Budget Adjustment** (ENVIRONMENTAL UTILITIES DEPARTMENT - WATER)

Summary: Staff recommends approval of a third amendment to the professional design services agreement with Carollo Engineers, Inc. for the Aquifer Storage Recovery Well and Pump Station Design Project in the amount of $1,028,656. The third amendment will increase the total not-to exceed contract amount from $6,369,033 to $7,397,689. This item also requests approval of a budget adjustment of $1,028,656 from the Water Construction Fund to fund the amendment.

CONTACT: Janice Gainey 916-774-5535 jrgainey@roseville.ca.us

The City Council will consider the recommendation to:

a. Adopt Resolution No. 26-041 approving a third amendment to professional design services agreement, by and between the City of Roseville and Carollo Engineers, Inc., and authorizing the City Manager to execute it on behalf of the City of Roseville.

b. Adopt Ordinance No. 7048 authorizing certain amendments to the fiscal year 2025-26 budget and declaring this ordinance to be immediately effective as an appropriation measure.

4. **Roseville Municipal Code Ordinance - Military Equipment Policy** (POLICE DEPARTMENT)

Summary: Staff recommends adoption of findings pursuant to California Government Code Section 7071 and 7072, and introduce for first reading an ordinance renewing Ordinance 6463 and readopting and continuing Roseville Police Department Policy No. 706, titled “Military Equipment”, thereby authorizing the Roseville Police Department’s continued use of “military equipment”, as defined by Government Code Section 7070.

CONTACT: Scott Blynn 916-774-5079 sblynn@roseville.ca.us

The City Council will consider the recommendation to:

a. Adopt the findings and introduce for first reading an ordinance renewing Ordinance 6463 and readopting and continuing Roseville Police Department Policy No. 706, titled “Military Equipment”, thereby authorizing the Roseville Police Department’s continued use of “military equipment”, as defined by Government Code Section 7070.

5. **Infill PCL 13 1028 Main Street Subdivision Project — Notice of Completion** (DEVELOPMENT SERVICES DEPARTMENT - ENGINEERING DIVISION)

Summary: Staff recommends approval of the Notice of Completion for the Infill PCL 13 1028 Main Street Subdivision Project as complete. The Engineering Division has made a final inspection of the project and has found the roadway infrastructure work complete in accordance with the improvement plans and City specifications. This action has no impact to the City's General Fund. Construction costs were paid by the developer.

CONTACT: Jeremy Knuthson 916-774-5252 jknuthson@roseville.ca.us

The City Council will consider the recommendation to:

a. Adopt Resolution No. 26-042 accepting the public work known as Infill PCL 13 1028 Main Street Subdivision Project, approving the "Notice of Completion", and authorizing and directing the City Engineer to execute said notice on behalf of the City of Roseville, therefore, and accepting all dedications offered on the recorded map of the subdivision.

6. Parking Lot at the Maidu Soccer Fields — Notice of Completion (PUBLIC WORKS DEPARTMENT - ENGINEERING - CITY PROJECT'S)

Summary: Staff recommends approval of the Notice of Completion for the Parking Lot at the Maidu Soccer Fields. The project included the construction of 84 parking spaces, including accessible spaces, and installation of two drainage facilities to support the improvements. The total cost of the construction contract with BRCO Constructors, Inc. was $633,900. The project was funded by General Fund resources.

CONTACT: Nick Bumb 916-746-1313 nfbumb@roseville.ca.us

The City Council will consider the recommendation to:

a. Adopt Resolution No. 26-044 accepting the public work known as Parking Lot at the Maidu Soccer Fields, approving the “Notice of Completion”, and authorizing the Public Works Director to execute said notice on behalf of the City of Roseville.

7. Federal Emergency Management Agency Fiscal Year 2025 Hazard Mitigation Grant Program – Application (PUBLIC WORKS DEPARTMENT – ENGINEERING – FLOODPLAIN MANAGEMENT)

Summary: Staff recommends authorization to submit a grant application to the Federal Emergency Management Agency (FEMA) through the California Office of Emergency Services (CalOES) for the Fiscal Year 2025 Hazard Mitigation Grant Program (HMGP) and authorizing the City Manager or his designee to execute all related forms and agreements on behalf of the City. If awarded, funds would be applied to the Pleasant Grove Stormwater Retention Basin Project. The project is funded by the Pleasant Grove/Curry Creek Watershed Drainage Mitigation Fee Fund. No General Fund resources are included for this project.

CONTACT: Brian Walker 916-746-1349 walkerbrian@roseville.ca.us

The City Council will consider the recommendation to:

a. Adopt Resolution No. 26-046 approving a grant application to the California Office of Emergency Services for the Federal Emergency Management Agency fiscal year 2025 Hazard

Mitigation Grant Program, and authorizing the Assistant City Manager or Public Works Director to execute all related forms and agreements on behalf of the City of Roseville.

8. **Fiscal Year 2024-25 Transporation Development Act Claim Revision** (PUBLIC WORKS DEPARTMENT - TRANSPORTATION)

Summary: Staff recommends approval of the revised Fiscal Year 2024-25 Transportation Development Act claim in the amount of $12,563,878 for the City's transit and transportation funding, and authorization for the City Manager or his designee to execute the claim on behalf of the City. Included in this approval is a payment of $59,547 to Placer County Transportation Planning Agency for Roseville's share of the Funding Strategy Outreach program.

CONTACT: Kimberly Goulet 916-746-1320 kegoulet@roseville.ca.us

The City Council will consider the recommendation to:

a. Adopt Resolution No. 26-053 approving and authorizing execution of the 2024/25 Transportation Development Act claims revision to the Placer County Transportation Planning Agency; and

b. Approve payment of FY2024-25 Local Transportation Fund funds to Placer County Transportation Planning Agency in the amount of $59,547 for the Placer County Transportation Planning Agency Funding Strategy Outreach program.

9. **Reservation of Affordable Housing Funds for Development of the Pleasant Grove Apartments Phase II** (ECONOMIC DEVELOPMENT DEPARTMENT - HOUSING)

Summary: Staff recommends approval to reserve $3,000,000 in affordable housing funds for an affordable housing project to be developed in Roseville. The request is to reserve $1,500,000 from the City Local Housing Trust Fund and $1,500,000 from the State Local Housing Trust Fund for construction of Mercy Housing's affordable housing project, Pleasant Grove Apartments Phase II. The City's Local Housing Trust Fund receives funding from developer in-lieu fees and payoffs from developer subsidized affordable purchase loans. The Housing Division has funding available in the Local Housing Trust Fund (LHTF), which will be used to match available state-awarded LHTFs. No General Fund resources will be used.

CONTACT: Kristine Faelz 916-774-5451 kpfaelz@roseville.ca.us

The City Council will consider the recommendation to:

a. Adopt Resolution No. 26-052 approving the reservation of $3,000,000 in affordable housing funds for the development of the Pleasant Grove Apartments Phase II.

10. **Western Systems Power Pool Agreement Collateral Annex and Cover Sheet** (ELECTRIC DEPARTMENT - FINANCIAL & ADMINISTRATIVE)

Summary: Staff recommends approval of the Western Systems Power Pool (WSPP) Collateral Annex, including the Cover Sheet Elections, with NRG Business Marketing LLC (NRG) and Triolith Energy Fund, LP (Triolith). The documents supplement the WSPP Agreement previously

executed by the City and establish industry-standard credit and collateral provisions that would apply to any future wholesale physical power transactions with NRG and Triolith under the WSPP framework. There is no cost associated with the execution of these documents.

CONTACT: Patrick Zanardelli 916-774-5673 pzanardelli@roseville.ca.us

The City Council will consider the recommendation to:

a. Adopt Resolution No. 26-049 approving the Western Systems Power Pool Collateral Annex and Cover Sheet Elections, by and between the City of Roseville and NRG Business Marketing LLC, and authorizing the City Manager to execute them on behalf of the City of Roseville.

b. Adopt Resolution No. 26-050 approving the Western Systems Power Pool Collateral Annex and Cover Sheet Elections, by and between the City of Roseville and Triolith Energy Fund, LP, and authorizing the City Manager to execute them on behalf of the City of Roseville.

11. Substation Transformer Civil Construction - Approval of Plans and Specifications and Authorization to Call for Bids (ELECTRIC DEPARTMENT - ENGINEERING)

Summary: Staff recommends approval of plans and specifications of the Substation Transformer Civil Construction project and authorization for staff to call for bids. Construction work will occur at two locations: a new concrete foundation at Fiddyment Substation is required to site a spare 46MVA substation transformer, and construction work at Sierra Vista Substation is required to meet oil containment requirements. The cost of the project is estimated at $300,000. Funds are available in the Electric Department's FY2025-26 budget in the Electric Fund.

CONTACT: David Angel Jimenez 916-774-5698 dangel-jimenez@roseville.ca.us

The City Council will consider the recommendation to:

a. Approve the plans and specifications for the SubstationTransformer Civil Construction project and authorize staff to call for bids.

12. Renewable Energy Transaction Confirmation and Credit Support Addendum - Amendments (ELECTRIC DEPARTMENT - RESOURCE PLANNING & GENERATION)

Summary: Staff recommends approval of an amendment to the existing renewable agreement with Shell Energy North America, L.P. and to execute an updated Credit Support Annex. The contract amendment will increase the contract term by one year for a new term totaling 11.5 years, and increase the cost of the contract by $6,951,000, up to a total of $84,125,000 over the amended term of the contract. The updated Credit Support Annex with Shell Energy North America, L.P. will increase credit limits for both parties from $25,000,000 to $35,000,000, for high investment grade ratings, to reflect the higher total control authority. Funding for the cost of the amendment will be included in the Electric Department's proposed FY2026-27 budget and contingent on the City Council's approval.

CONTACT: Petra Wallace 916-774-5510 pwallace@roseville.ca.us

The City Council will consider the recommendation to:

a. Adopt Resolution No. 26-047 approving a first amendment to transaction confirmation, by and between the City of Roseville and Carollo Engineers, Inc., and authorizing the City Manager to execute it on behalf of the City of Roseville.

b. Adopt Resolution No. 26-048 approving a second amendment to WSPP Agreement Credit Support Addendum, by and between the City of Roseville and Carollo Engineers, Inc., and authorizing the City Manager to execute it on behalf of the City of Roseville.

13. Main Gas Supplier - Agreement Confirmation (ELECTRIC DEPARTMENT - RESOURCE PLANNING & GENERATION)

Summary: Staff recommends approval of a three-year main gas supplier agreement with ConocoPhillips Company to provide natural gas balancing services to the City. The agreement supports the Electric Department's operation of its natural gas generating facilities by scheduling the daily natural gas deliveries for planned electricity production. The annual cost of the agreement is estimated to be approximately $30,000. Funding is included in the Electric Department's FY2025-26 budget in the Electric Fund.

CONTACT: Petra Wallace 916-774-5510 pwallace@roseville.ca.us

The City Council will consider the recommendation to:

a. Adopt Resolution No. 26-043 approving a main gas supplier agreement confirmation, by and between the City of Roseville and Conocophillips Company, and authorizing the City Manager to execute it on behalf of the City of Roseville.

14. JM-51 Park Project - Approve Plans and Specifications and Authorize Staff to Call for Bids (PARKS, RECREATION, AND LIBRARIES DEPARTMENT - PARK DEVELOPMENT)

Summary: Staff recommends City Council approval of the plans and specifications for the JM-51 Park Project and authorize staff to call for bids. The project scope includes grading and utilities, a playground, shaded picnic area, walking paths, turf area, planting and irrigation. The project is estimated to cost $715,000 for the base bid and will be funded by the JM-51 Neighborhood Park project budget in the Neighborhood Park - Sierra Vista Fund.

CONTACT: Joel De Jong 916-774-5924 jdejong@roseville.ca.us

The City Council will consider the recommendation to:

a. Approve plans and specifications for the JM-51 Park Project and authorize staff to call for bids.

15. JM-52 Park Project - Approval of Plans and Specifications and Authorize Staff to Call for Bids (PARKS, RECREATION, AND LIBRARIES DEPARTMENT - PARK DEVELOPMENT)

Summary: Staff recommends City Council approval of plans and specifications for the JM-52 Park Project and authorize staff to call for bids. The project scope includes a playground, paved and natural walking paths, picnic area and seating, turf area, planting and irrigation. The project is

estimated to cost $475,000 for the base bid and will be funded by the JM-52 Neighborhood Park project budget in the Sierra Vista Neighborhood Park Fund.

CONTACT: Josh Cervantes 916-746-1233 jrcervantes@roseville.ca.us

The City Council will consider the recommendation to:

a. Approve the plans and specifications for the JM-52 Park Project and authorize staff to call for bids.

16. CO-61 Park Project - Approval of Plans and Specifications and Authorize Staff to Call for Bids (PARKS, RECREATION, AND LIBRARIES DEPARTMENT - PARK DEVELOPMENT)

Summary: Staff recommends approval of plans and specifications for the CO-61 Park Project and authorize staff to call for bids. The project scope includes grading and utilities, a playground, picnic area, walking paths, turf area, planting and irrigation. The project is estimated to cost $1,395,000 and will be funded by the Campus Oaks Neighborhood Park Fund.

CONTACT: Joel De Jong 916-774-5924 jdejong@roseville.ca.us

The City Council will consider the recommendation to:

a. Approve plans and specifications for the CO-61 Park Project and authorize staff to call for bids.

17. Property Tax Revenue Consulting Services - Professional Services Agreement (FINANCE DEPARTMENT)

Summary: Staff recommends approval of a professional services agreement with HdL Coren & Cone to provide property tax revenue consulting services for an amount not to exceed $88,500 and a term of three years, with two optional one-year renewals. There are adequate funds available in the FY2025-26 adopted budget to fund this agreement.

CONTACT: Jeannine Thrash 916-774-5473 jthrash@roseville.ca.us

The City Council will consider the recommendation to:

a. Adopt Resolution No. 26-051 approving a professional services agreement, by and between the City of Roseville and HdL Coren & Cone, and authorizing the City Manager to execute it on behalf of the City of Roseville.

18. Resolution - Deneen Blair

Summary: Commend Deneen Blair, who is retiring from the Environmental Utilities Department, for more than thirty-one years of outstanding service and dedication to the City of Roseville, congratulate her for her many accomplishments, and wish her a long, healthy, and fulfilling retirement.

CONTACT: Arleta Wagenhals 916-774-5200 amswagenhals@roseville.ca.us

19. Minutes of Prior Meetings (CITY CLERK DEPARTMENT)

Summary: Staff recommends approval of the minutes of the February 4, 2026, Special Closed Session Meeting and minutes of the February 18, 2026, City Council Meeting.

CONTACT: Adilia Keller 916-774-5265 amkeller@roseville.ca.us

The City Council will consider the recommendation to:

a. Approve the minutes of the February 4, 2026, Special Closed Session Meeting and minutes of the February 18, 2026, City Council Meeting.

END OF CONSENT CALENDAR

VIII. PRESENTATIONS/REPORTS

20. Council Discretionary Funds Request - Volunteers of America, Northern California & Northern Nevada (CITY MANAGER DEPARTMENT - ASSISTANT CITY MANAGER)

Summary: Memo from Executive Assistant Heather Blanco and City Clerk Carmen Avalos requesting the City Council consider a request for a $3,000 sponsorship from Council Discretionary Funds for Volunteers of America, Northern California & Northern Nevada (VOA, NCNN) in support of the Voices of Hope fundraising event on April 30, 2026, from 8:00 a.m. to 10:00 a.m. at the DoubleTree Hilton Hotel. The money raised for the Voices of Hope fundraising event will serve individuals experiencing homelessness, including in Roseville. The event features a program presentation with speakers who share their life experiences and the impact of VOA's services on their path to stability and independence. All attendees will be provided with a full breakfast. The sponsorship funds will be used to cover the costs of venue rental, catering, event marketing materials, etc. to ensure 100% of the event donations go towards program needs.

CONTACT: Heather Blanco 916-746-1171 hblanco@roseville.ca.us

The City Council will consider the recommendation to:

a. Consider a request for $3,000 sponsorship from Council Discretionary Funds for Volunteers of America, Northern California & Northern Nevada (VOA, NCNN) in support of the Voices of Hope fundraising event.

IX. PUBLIC HEARINGS

NOTICE TO THE PUBLIC: Public Hearing Process

City Council, when considering the matter, will take the following actions:

1. Open the Public Hearing
2. Presentation by staff
3. Presentation by applicant or appellant
4. Accept public testimony
5. Appellant or applicant rebuttal period
6. Close the Public Hearing
7. City Council comments and questions

8. City Council action

Any challenges in court about public hearing matters noticed on this agenda may be limited to only those issues, that were raised orally at the public hearing or in written form received by the City on or before the hearing.
Public Hearings listed for continuance will be continued and posting of this agenda will serve as notice of continuation.

21. Tax Equity and Fiscal Responsibility Act Hearing for Siena Apartments (FINANCE DEPARTMENT)

Summary: Staff recommends Council conduct a Tax Equity and Fiscal Responsibility Act (TEFRA) Hearing to consider approval of the issuance of bonds by the California Statewide Communities Development Authority (CSCDA) in an amount not to exceed $17,000,000, for the benefit of Siena Roseville, L.P., to refinance the acquisition, rehabilitation, improvement and equipping of a 156-unit multifamily rental housing project generally known as Siena Apartments. Siena Roseville, L.P. has requested that CSCDA serve as the municipal issuer of tax-exempt multifamily housing revenue bonds. In order for all or a portion of the bonds to qualify as tax-exempt, the City must conduct a public hearing providing members of the community an opportunity to speak in favor of or against the use of tax-exempt bonds for the financing of the Project. Adoption of the resolution is solely for the purpose of satisfying the requirements of TEFRA, the Internal Revenue Code, and California Government Code Section 6500. There is no fiscal impact to the City.

CONTACT: Jeannine Thrash 916-774-5473 jthrash@roseville.ca.us

The City Council will consider the recommendation to:

a. Adopt Resolution No. 26-054 approving the issuance by the California Statewide Communities Development Authority of exempt facility bonds for the Siena Apartments.

22. Roseville Municipal Code Updates - Electric General Service 5 Rate (ELECTRIC DEPARTMENT - FINANCIAL & ADMINISTRATIVE)

Summary: Staff recommends City Council introduce for first reading an ordinance amending sections 14.24.020 and 14.24.050 of Chapter 14.24 of the Roseville Municipal Code in regards to establishing a new General Service 5 rate class for Roseville Electric customers with recorded demand greater than 7,500 kW and a load factor of 85 percent or higher. The rate is designed to more accurately reflect the cost of service for extra-large customers with highly efficient usage patterns and maintain alignment with Roseville's cost-based rate policy.

CONTACT: Kerri Crosby 916-746-1263 kcrosby@roseville.ca.us

The City Council will consider the recommendation to:

a. Introduce for first reading an Ordinance amending sections 14.24.020 and 14.24.050 of Chapter 14.24 of the Roseville Municipal Code in regards to the Electric General Service 5 Rate.

X. PUBLIC COMMENTS

This is the second opportunity to make a public comment on non-agenda items.

XI. STAFF/COUNCIL REPORTS

XII. ADJOURNMENT

City Council Communication

Meeting Date: 3/4/2026
Item #: V.1
File #: 0102-06
Item ID: 2026-119

Title:	Proclamation - California Arbor Week
Contact:	Arleta Wagenhals 916-774-5200 amswagenhals@roseville.ca.us

SUMMARY

Proclaim March 7-14, 2026 as California Arbor Week and urge all residents to observe and celebrate the week by planting trees for our benefit and for the benefit of future generations.

RECOMMENDATION

Proclaim March 7-14, 2026 as California Arbor Week and urge all residents to observe and celebrate the week by planting trees for our benefit and for the benefit of future generations.

BACKGROUND

Not Applicable

FISCAL IMPACT

Not Applicable

ENVIRONMENTAL REVIEW

The California Environmental Quality Act (CEQA) does not apply to activities that will not result in a direct or reasonably foreseeable indirect physical change in the environment, or is otherwise not considered a project as defined by CEQA Statute §21065 and CEQA State Guidelines §15060(c)(3) and §15378. Council approval of a proclamation meets the above criteria and is not subject to CEQA. No additional environmental review is required.

CITY COUNCIL STRATEGIC PLAN/OVERARCHING GOALS

1. Ensure a safe and healthy community
5. Support community engagement and advocacy
6. Deliver exceptional City services

Respectfully Submitted,
Arleta Wagenhals, City Clerk Technician

Carmen Avalos, City Clerk

ATTACHMENTS:

1. CA Arbor Week Proclamation 2026

REVIEWERS:

Arleta Wagenhals, City Clerk Department	Created/Initiated - 2/10/2026
Dennis Kauffman, City Manager Department - Assistant City Manager	Approved - 2/10/2026
Michelle Sheidenberger, City Attorney Department	Final Approval - 2/10/2026

Proclamation

CALIFORNIA ARBOR WEEK
MARCH 7-14, 2026

WHEREAS, Arbor Day is celebrated nationally to encourage everyone to maintain and replenish our country's vast forests, orchards, and woodlands; and

WHEREAS, In California, Arbor Day is observed on the birthday of Luther Burbank, a famed California horticulturalist whose life's labor produced hundreds of plants and trees that have contributed to the natural splendor and food production in the state; and

WHEREAS, California Arbor Week has the involvement of the City of Roseville and Roseville Urban Forest Foundation by planting and caring for trees, which contributes to a healthier urban environment; and

WHEREAS, Trees play an important role in energy conservation by modifying temperature extremes with shade and humidity, and are particularly important in reducing the amount of energy consumed in heating and cooling buildings and homes; and

WHEREAS, Trees planted in urban areas play a significant role in meeting the state's greenhouse gas emission reduction targets by sequestering carbon as well as reducing energy consumption; and

WHEREAS, Trees directly contribute to improving California's air quality, reducing air pollution by removing airborne particulates from the atmosphere and helping to purify the air, playing a vital role in improving public health in our communities; and

WHEREAS, Trees are significant in protecting and purifying California's limited water resources by reducing surface runoff, contributing to stormwater management activity and protecting urban water resources; and

WHEREAS, Trees provide essential habitat for much of California's wildlife, including many listed, threatened, and endangered species; and

WHEREAS, Trees enhance the aesthetic quality of life in urban communities by providing a natural buffer for surface noise and natural recreational resources for California's children and youth.

NOW, THEREFORE, I, KRISTA BERNASCONI, MAYOR OF THE CITY OF ROSEVILLE, CALIFORNIA, do hereby proclaim **March 7-14, 2026** as **CALIFORNIA ARBOR WEEK** and urge all residents to observe and celebrate the week by planting trees for our benefit and for the benefit of future generations.

SIGNED AND APPROVED this 4TH day of March 2026.

CITY OF ROSEVILLE
INCORPORATED APRIL 10, 1909

KRISTA BERNASCONI, MAYOR

City Council Communication

Meeting Date: 3/4/2026
Item #: VII.2
File #: 0324-01
Item ID: 2026-37

Title:	Resolution Declaring Public Weeds and Rubbish a Public Nuisance - Setting a Public Hearing Date
Contact:	Jordan Paul 916-774-5802 jpaul@roseville.ca.us

SUMMARY

Staff recommends approval of a resolution declaring weeds, rubbish, dirt, and/or rank growth within the City to be a public nuisance, as well as ordering the Fire Chief to give notice of the passage and setting a time and place for the required public hearing. The public hearing will be scheduled for the City Council meeting on Wednesday, April 15, 2026. Owners of private parcels that are abated by the City are responsible for the costs associated with providing abatement services. This item has no fiscal impact on the General Fund.

RECOMMENDATION

Staff recommends that the City Council approve a resolution declaring weeds, rubbish, dirt, and/or rank growth within the City of Roseville on the parcels identified on the attached list (based on available City GIS data at the time of the report) to be a public nuisance, as well as ordering the Fire Chief to give notice of the passage and the setting on the time and place for the required public hearing.

BACKGROUND

The Fire Department manages a very proactive and effective annual Weed Abatement Program. Each year all vacant parcels are identified and property owners are notified of their obligation to maintain adequate fire breaks as a fire protection/prevention measure. The fire and life safety requirements for vegetation management are contained in the California Fire Code, which is enforced by the Roseville Fire Department. Property owners are given an opportunity to abate hazards that exist on their parcels. The City only conducts abatement activities on private parcels once the owner has failed to abate the hazard by a pre-determined date specified by the Fire Department. Abatement costs related to private properties are billed to the respective property owners. The notification, public hearing, and cost recovery processes are specified in Chapter 9.20 of the Roseville Municipal Code.

The public hearing will be scheduled for the City Council meeting on Wednesday, April 15, 2026.

FISCAL IMPACT

Owners of private parcels that are abated by the City are responsible for the costs associated with providing abatement services. A bill is sent to each property owner detailing the abatement costs, as well as an administrative fee. If the property owner fails to pay the bill, the City places a lien on the subject property and the monies owed are reimbursed through the property tax collection process.

ENVIRONMENTAL REVIEW

The Weed Abatement Program involves minor alteration in the condition of the land, water, and/or vegetation and will not remove healthy, mature, scenic trees. This activity is categorically exempt from

CEQA as a Class 4 Exemption (State CEQA Guidelines Section 15304). The Exemption has been prepared and no further CEQA action is required.

CITY COUNCIL STRATEGIC PLAN/OVERARCHING GOALS

1. Ensure a safe and healthy community

Respectfully Submitted,
Jordan Paul, Division Chief

Ryan Harrigan, Fire Chief

ATTACHMENTS:

1. Resolution 26-045
2. List of Parcels - Alpha Numeric by Street
3. List of Parcels - By APN
4. CEQA Exemption
5. Sample Letter
6. Public Notice

REVIEWERS:

Jordan Paul, Fire Department	Created/Initiated - 2/11/2026
Deanna Schondelmayer, Fire Department	Approved - 2/11/2026
Ryan Harrigan, Fire Department	Approved - 2/11/2026
Kelly Aye, City Attorney Department	Approved - 2/17/2026
Katrina Six, City Clerk Department	Approved - 2/18/2026
Ryan DeVore, City Manager Department - Assistant City Manager	Approved - 2/19/2026
Dennis Kauffman, City Manager Department - Assistant City Manager	Approved - 2/19/2026
Michelle Sheidenberger, City Attorney Department	Approved - 2/19/2026
Dominick Casey, City Clerk Department	Approved - 2/23/2026
Katrina Six, City Clerk Department	Final Approval - 2/23/2026

RESOLUTION NO. 26-045

RESOLUTION OF THE COUNCIL OF THE CITY OF ROSEVILLE DECLARING ALL WEEDS, DIRT, RUBBISH, AND/OR RANK GROWTHS WITHIN THE CITY OF ROSEVILLE TO BE A NUISANCE; ORDERING THE FIRE CHIEF TO GIVE NOTICE OF THE PASSAGE OF THIS RESOLUTION; AND SETTING A TIME AND PLACE FOR HEARING ANY OBJECTIONS TO THE PROPOSED DESTRUCTION OR REMOVAL OF SUCH WEEDS, DIRT, RUBBISH, OR RANK GROWTHS

WHEREAS, weeds, dirt, rubbish and rank growths are growing, located and existing on property within the City of Roseville and constitute a public nuisance; and

WHEREAS, it is the desire of the Council to cause the abatement of that nuisance by destruction or removal of such weeds, dirt, rubbish and rank growths.

NOW, THEREFORE, BE IT RESOLVED the City Council of the City of Roseville as follows:

That all weeds, dirt, rubbish and rank growths growing, located or existing on the property within the City of Roseville described by Placer County Assessor's parcel numbers in the "Weed, Dirt, Rubbish and Rank Growths Abatement List – 2026", a copy of which is on file in the office of the City Clerk, are hereby declared to be a public nuisance.

1. That the Fire Chief of the City of Roseville is hereby ordered to give notice of the passage of this resolution and required by law stating, among other things, that unless such nuisance is be abated without delay of the destruction or removal of the weeds, dirt, rubbish and rank growths, the nuisance will be abated by the city authorities and the expenses thereof assessed upon the lots, parcels and lands from or on which such nuisance is abated.

2. That Wednesday, April 15, 2026 at 6:00 p.m. or as soon thereafter as the matter can be heard, in the Roseville Electric Building, 116 S. Grant Street, Roseville, California, is hereby fixed as the time and place for hearing.

3. That the City Clerk is hereby directed to publish notice to destroy or remove those weeds, dirt, rubbish or rank growths declared therein to be a public nuisance at least twice in a newspaper published and circulated in the City of Roseville. The first publication of which shall be at least ten (10) days prior to the time fixed herein by this Council for hearing objections.

PASSED AND ADOPTED by the Council of the City of Roseville this____day of _____, 2026, by the following vote on roll call:

AYES COUNCILMEMBERS:

NOES COUNCILMEMBERS:

ABSENT COUNCILMEMBERS:

_____
MAYOR

ATTEST:

_____
City Clerk

Weed Abatement 2026 – List of Parcels

APN	Address	APN	Address
013-053-015-000	532 ALOLA ST	496-790-022-000	4009 AZURE SPRING WY
011-172-007-000	335 ALTA VISTA AV	496-790-009-000	4016 AZURE SPRING WY
011-181-006-000	625 ALTA VISTA AV	496-790-021-000	4017 AZURE SPRING WY
498-430-078-000	4001 ALUMROOT DR	496-790-010-000	4024 AZURE SPRING WY
498-430-077-000	4009 ALUMROOT DR	496-790-020-000	4025 AZURE SPRING WY
498-430-076-000	4025 ALUMROOT DR	496-790-011-000	4032 AZURE SPRING WY
498-430-075-000	4033 ALUMROOT DR	496-790-019-000	4033 AZURE SPRING WY
498-430-074-000	4041 ALUMROOT DR	496-790-012-000	4040 AZURE SPRING WY
498-430-042-000	4048 ALUMROOT DR	496-790-018-000	4041 AZURE SPRING WY
498-440-075-000	4049 ALUMROOT DR	496-790-013-000	4048 AZURE SPRING WY
498-430-043-000	4056 ALUMROOT DR	496-790-017-000	4049 AZURE SPRING WY
498-430-044-000	4064 ALUMROOT DR	496-780-003-000	4057 AZURE SPRING WY
498-430-045-000	4072 ALUMROOT DR	496-780-002-000	4065 AZURE SPRING WY
498-430-073-000	4073 ALUMROOT DR	014-033-024-000	329½ B ST
498-430-046-000	4080 ALUMROOT DR	015-920-004-000	508 BANDON DUNES CT
498-430-072-000	4081 ALUMROOT DR	015-920-005-000	516 BANDON DUNES CT
498-430-047-000	4088 ALUMROOT DR	015-920-011-000	517 BANDON DUNES CT
498-430-071-000	4089 ALUMROOT DR	015-920-006-000	524 BANDON DUNES CT
498-430-048-000	4096 ALUMROOT DR	015-920-010-000	525 BANDON DUNES CT
498-430-070-000	4097 ALUMROOT DR	015-920-007-000	532 BANDON DUNES CT
498-430-049-000	4104 ALUMROOT DR	015-920-009-000	533 BANDON DUNES CT
498-430-069-000	4105 ALUMROOT DR	015-920-008-000	540 BANDON DUNES CT
498-430-050-000	4112 ALUMROOT DR	015-910-030-000	2009 BANDON DUNES DR
498-430-068-000	4113 ALUMROOT DR	015-910-029-000	2017 BANDON DUNES DR
498-430-051-000	4120 ALUMROOT DR	015-910-028-000	2025 BANDON DUNES DR
498-430-067-000	4121 ALUMROOT DR	015-910-027-000	2033 BANDON DUNES DR
498-430-052-000	4128 ALUMROOT DR	015-910-026-000	2041 BANDON DUNES DR
498-430-066-000	4129 ALUMROOT DR	015-910-010-000	2048 BANDON DUNES DR
498-430-053-000	4136 ALUMROOT DR	015-910-025-000	2049 BANDON DUNES DR
498-430-065-000	4137 ALUMROOT DR	015-910-024-000	2057 BANDON DUNES DR
498-430-054-000	4144 ALUMROOT DR	015-910-023-000	2065 BANDON DUNES DR
498-430-064-000	4145 ALUMROOT DR	015-910-022-000	2073 BANDON DUNES DR
498-430-055-000	4152 ALUMROOT DR	015-910-021-000	2081 BANDON DUNES DR
498-430-063-000	4153 ALUMROOT DR	498-380-011-000	5009 BASALTO WY
498-430-056-000	4160 ALUMROOT DR	498-380-010-000	5017 BASALTO WY
490-360-003-000	1055 AMINGTON DR	498-380-009-000	5025 BASALTO WY
496-690-061-000	4000 AMORUSO RANCH RD	498-380-014-000	5032 BASALTO WY
496-690-060-000	4008 AMORUSO RANCH RD	498-380-008-000	5033 BASALTO WY
496-690-059-000	4016 AMORUSO RANCH RD	498-380-015-000	5040 BASALTO WY
496-690-058-000	4024 AMORUSO RANCH RD	498-380-007-000	5041 BASALTO WY
496-690-057-000	4032 AMORUSO RANCH RD	498-380-016-000	5048 BASALTO WY
496-690-056-000	4040 AMORUSO RANCH RD	498-380-006-000	5049 BASALTO WY
496-690-055-000	4048 AMORUSO RANCH RD	498-380-017-000	5056 BASALTO WY
017-480-027-000	4200 AMORUSO RANCH RD	498-380-005-000	5057 BASALTO WY
015-166-014-000	1271 ANTELOPE CREEK DR	498-380-018-000	5064 BASALTO WY
498-360-094-000	5192 ASTEROID WY	498-380-004-000	5065 BASALTO WY
498-360-093-000	5200 ASTEROID WY	498-410-005-000	5008 BASELINE RD
498-360-092-000	5208 ASTEROID WY	498-410-004-000	5040 BASELINE RD
012-131-041-000	507 ATKINSON ST	498-410-006-000	5050 BASELINE RD
012-091-015-000	705 ATKINSON ST	498-410-007-000	5060 BASELINE RD
473-180-011-000	8000 ATKINSON ST	498-410-009-000	5080 BASELINE RD
013-012-002-000	904 ATLANTIC ST	498-410-008-000	5088 BASELINE RD
496-790-008-000	4000 AZURE SPRING WY	498-410-002-000	5108 BASELINE RD
496-790-023-000	4001 AZURE SPRING WY	498-410-010-000	5120 BASELINE RD

Weed Abatement 2026 – List of Parcels

Address	APN	Address	APN
011-063-002-000	825 LINCOLN ST	013-194-012-000	229 DONNER AV
011-063-004-000	801 LINCOLN ST	013-194-027-000	1017 DOUGLAS BL
011-063-005-000	845 LINCOLN ST	013-212-049-000	228 HARDING BL
011-092-010-000	300 ELEFA ST	013-213-024-000	121 N SUNRISE AV
011-101-011-000	725 WASHINGTON BL	013-270-017-000	219 HARDING BL
011-101-012-000	751 WASHINGTON BL	013-290-002-000	401 OAK ST
011-147-034-000	510 LINCOLN ST	013-300-010-000	3104 DUBLIN PL
011-172-007-000	335 ALTA VISTA AV	013-300-011-000	3096 DUBLIN PL
011-181-006-000	625 ALTA VISTA AV	013-300-012-000	3088 DUBLIN PL
011-182-010-000	305 CAMPO ST	013-300-013-000	3080 DUBLIN PL
011-250-007-000	531 VALLEJO AV	013-300-014-000	3072 DUBLIN PL
011-280-031-000	417 HOVEY CT	013-300-015-000	3064 DUBLIN PL
012-091-015-000	705 ATKINSON ST	013-300-016-000	3168 DUBLIN PL
012-131-041-000	507 ATKINSON ST	013-300-017-000	3160 DUBLIN PL
012-132-047-000	262 ELM ST	013-300-018-000	3152 DUBLIN PL
012-134-031-000	246 FIG ST	013-300-019-000	3144 DUBLIN PL
012-142-018-000	116 ELM ST	013-300-020-000	3136 DUBLIN PL
012-144-010-000	600 CHURCH ST	013-300-021-000	3128 DUBLIN PL
012-152-011-000	405 CHURCH ST	013-300-022-000	3120 DUBLIN PL
012-162-009-000	213 FIG ST	014-033-024-000	329½ B ST
012-171-013-000	1012 CHURCH ST	014-041-016-000	426 FIFTH ST
012-171-022-000	115 FIG ST	014-051-017-000	350 SIXTH ST
012-171-029-000	1008 CHURCH ST	014-052-016-000	233 LA RUE AL
012-171-030-000	1004 CHURCH ST	014-061-039-000	435 FIFTH ST
012-171-031-000	1000 CHURCH ST	014-062-018-000	412 SIXTH ST
012-172-020-000	113 ELM ST	014-113-049-000	906 DOUGLAS BL
012-185-012-000	1118 CHURCH ST	014-113-060-000	214 KEEHNER AV
012-185-024-000	1110 CHURCH ST	014-120-010-000	200 BONNY KNOLL RD
012-185-029-000	125 GRAPE ST	014-130-008-000	1123 WAYNE DR
013-012-002-000	904 ATLANTIC ST	014-183-031-000	260 S HARDING BL
013-022-033-000	87 PARRY ST	014-252-003-000	408 EARL AV
013-022-047-000	124 CENTER ST	014-263-042-000	600 KINDRED LN
013-024-023-000	220 EAST ST	014-263-045-000	600 KINDRED LN
013-030-012-000	508 CENTER CT	015-080-001-000	941 LAWTON AV
013-030-013-000	516 CENTER CT	015-080-045-000	923 LAWTON AV
013-030-014-000	517 CENTER CT	015-100-031-000	505 BERRY ST
013-030-015-000	509 CENTER CT	015-100-066-000	601 BERRY ST
013-053-015-000	532 ALOLA ST	015-166-014-000	1271 ANTELOPE CREEK DR
013-123-021-000	431 VERNON ST	015-350-005-000	500 DEREK PL
013-152-019-000	620 OAK ST	015-360-026-000	204 PAUL CT
013-163-003-000	711 OAK ST	015-910-001-000	133 BAY HILL CT
013-163-004-000	705 OAK ST	015-910-005-000	101 BAY HILL CT
013-182-037-000	214 S LINCOLN ST	015-910-007-000	308 SAWGRASS PL

Notice of Exemption

To: Placer County Clerk
Recorder's Office
3091 County Center Dr.
Auburn, CA 95603

From: City of Roseville
Community Development Dept.
311 Vernon Street
Roseville, CA 95678

Project Title: 2026 Weed Abatement Project
(Resolution Declaring Weeds and Rubbish a Public Nuisance)

Project Location(s): City-wide throughout Roseville

Project Description: The City of Roseville Fire Department proposes to notify property owners of vacant parcels, within the City, that a potential fire hazard exists on these parcels. If corrective action is not taken by the property owner the City's Fire Department will proceed with weed abatement activities including, mechanical mowing, trimming, and other methods of weed removal.

Public Agency Approving Project: Roseville City Council

Agency/Individual Carrying Out Project: City of Roseville Fire Department

Reason why this Project is Exempt: This project is applicable to Class 4 Categorical Exemption as described in Section 15304 (i) of the California Environmental Quality Act (CEQA) guidelines which states:

> "Class 4 consists of…minor public...alterations in the conditions of land which do not involve removal of healthy, mature, scenic trees…including but not limited to…fuel management activities…"

Lead Agency Contact Person: Jordan Paul, Fire Division Chief, Fire Department (916-774-5806) 316 Vernon Street, Roseville, CA 95678.

Signature: Jessica Lynch Date: 2/10/2026

Jessica Lynch, Environmental Coordinator
City of Roseville

City of Roseville Fire Department • 316 Vernon St., #480 • Roseville, California 95678-2618
(916) 774-5800 • (916) 774-5810 *FAX* • (916) 774-5220 *TDD* • www.roseville.ca.us

April 1, 2026

NOTICE TO ABATE FIRE HAZARD

This letter is intended for parcels that are undeveloped.

If the property has been developed or sold, please disregard the following and complete the information on the following page(s) and return it to the Roseville Fire Department, 316 Vernon Street, Suite 480, Roseville, CA 95678.

This letter is to notify you that a fire hazard may exist on the undeveloped parcel(s) listed on the following page(s). The law requires that all cut or uncut weeds, grass, vines, vegetation, or other combustible materials be removed when determined to be a fire hazard. Roseville Fire Code (RFC) 304.1.3; H&S Code, Division 12, Part 5.

*If applicable, all necessary work shall be completed no later than **July 1, 2026**. If the property owner does not comply with this notice, the required firebreaks will be made by the City of Roseville. All costs incurred by the City, including a $**356.00** per parcel administration fee, shall be billed directly to the property owner.*

WEED ABATEMENT GUIDELINES

A clear firebreak of a minimum 30-foot width shall be created and maintained in all areas designated by the City of Roseville. Clear firebreaks shall be provided around all combustible buildings, fences, vehicles, structures, or storage on this parcel or on adjacent properties. We ask that you adhere to the following abatement requirements:

1. *The preferred method of weed abatement shall be accomplished by discing and completed so that all weeds, grass, other vegetation or organic material which can be expected to burn are completely removed or turned under so there is insufficient fuel to sustain or allow the spread of fire.*
    - *Discing does not negate the requirement for weed removal up to the structure.*
2. *Where discing is not practical, mowing is permitted where the material is mulched and the remaining weeds do not exceed two inches in height.*
3. *Spark arrestors shall be installed on all outdoor equipment with internal combustion engines.*
4. *Parcels that are one acre or less shall be completely abated.*

Prior to abating weeds, seasonal rains should be considered. Late rains will produce late growing weeds. Weeds once mowed, may require additional mowing. The weed abatement program's intent is to reduce the fire hazard during fire season.

SAMPLE

Notice to Abate Fire Hazard

Owner Name: Sample
Owner Address: 333 Sample Way
SACRAMENTO, CA 956XX

Assessor Parcel Number: 000-000-000-000
Site Address: 203 SAMPLE ST
Roseville, CA 956XX

Please check the box below depicting the current status of the property listed above.

☐ This property has been developed.
☐ This property has been sold.

If the property listed above has been sold, please provide the date of sale and contact information of the new owner below.

Date Sold: _____

New Owner Name and Address: _____
_____
_____

Return to: Roseville Fire Department
316 Vernon St, Suite 480
Roseville, CA 95678

Please remember: If applicable, all necessary work shall be completed by July 1, 2026

SAMPLE

PUBLIC NOTICE

Public Notice is hereby given that a public hearing will be held before the City Council of the City of Roseville for the purpose of considering the following:

WEED ABATEMENT HEARING

On March 4, 2026 pursuant to the provisions of Chapter 9.20 of the Roseville Municipal Code, the City Council of the City of Roseville adopted Resolution No. 26-XXX declaring that all weeds as defined in Section 9.20.010 (C) (1) of said chapter and all dirt, rubbish and/or rank growth, as defined in Section 9.20.010 (C) (2,3,4) of said chapter, of any kind on private property, or in any street or alley abutting any property, constitute a public nuisance which must be abated by the destruction or removal thereof.

All property owners, lessees or occupants of buildings, grounds or lots shall, without delay, destroy or remove all such weeds, dirt, rubbish and/or rank growths from their property and half of the abutting street and alley, if any, between the lot lines, as extended, or such weeds, dirt, rubbish and/or rank growths will be destroyed or removed and such nuisance abated by the city authorities, in which case the cost of destruction or removal will be assessed upon the lots and lands from or on which, or abutting the streets and alleys from or on which, such nuisance was abated, and such costs will constitute a lien upon the lots or parcels until paid and will be collected on the next tax roll upon which municipal taxes are collected.

All property owners having objections to the proposed abatement of the nuisances are hereby notified to attend a meeting of the Council of the City of Roseville to be held on April 15, 2026 at 6:00 o'clock p.m., or as soon thereafter as may be heard, in the Roseville Electric Building, 116 S. Grant Street, First Floor, Roseville, CA, where and when all objections will be heard and given due consideration.

FIRE CHIEF OF THE CITY OF ROSEVILLE
RYAN HARRIGAN

ROSEVILLE CITY COUNCIL
CARMEN AVALOS, CITY CLERK

DATED: March 4, 2026

PUBLISH: FRIDAY, April 3, 2026

City Council Communication

Meeting Date: 3/4/2026
Item #: VII.3
File #: 0800-02 & 0201-01
Item ID: 2026-91

Title:	Aquifer Storage Recovery Well and Pump Station Design Project - Professional Design Services Agreement Amendment and Budget Adjustment
Contact:	Janice Gainey 916-774-5535 jrgainey@roseville.ca.us

SUMMARY

Staff recommends approval of a third amendment to the professional design services agreement with Carollo Engineers, Inc. for the Aquifer Storage Recovery Well and Pump Station Design Project in the amount of $1,028,656. The third amendment will increase the total not-to exceed contract amount from $6,369,033 to $7,397,689. This item also requests approval of a budget adjustment of $1,028,656 from the Water Construction Fund to fund the amendment.

RECOMMENDATION

Staff recommends that the City Council:

1. Adopt a resolution to approve a Third Amendment to the Professional Design Services Agreement with Carollo Engineers, Inc. for the Aquifer Storage Recovery Well and Pump Station Project and authorize the City Manager to execute it on behalf of the City of Roseville.
2. Adopt an ordinance to approve a budget adjustment of $1,028,656 from available resources in the Water Construction Fund to fully fund the project.

BACKGROUND

The objective of this project is to support Roseville's groundwater program by designing additional ASR wells to expand the capacity of the existing program, further diversifying Roseville's water supply and ensure the City's water supply continues to meet the needs of our customers and provide the foundation for a thriving economy.

After a competitive proposal process, a Professional Design Services Agreement was awarded to Carollo Engineers on April 1, 2020, for design and engineering support during construction for the Aquifer Storage and Recovery (ASR) wells.

On January 19, 2022, an Amendment to Carollo's contract (Amendment 1) was approved to provide design of water treatment facilities to address water quality related to the presence of iron and manganese compounds in ground water at the Westbrook (Well 9) and Solaire (Well 18) facilities. Amendment 1 also increased the scope of work to provide support of Programmable Logic Controllers (PLC) programming and Supervisory Control and Data Acquisition (SCADA) system integration.

On June 5, 2024 an Amendment to Carollo's contract (Amendment 2) was approved to approve a portion of optional Task 10 for the design of the next two ASR wells; Misty Wood (well 19) and Campus Oaks (well 13). Amendment 2 also requested additional Carollo scope for PLC and SCADA system programming and SCADA system integration on the Campus Oaks and Misty Wood wells to be included in their Contract Amendment 2.

The proposed scope of Amendment 3 incorporates two additions to the scope of the Original Contract under Task 10.

Task 10.1 - Additional Design Work and Construction Documents.

During the design and startup of construction of the Campus Oaks and Misty Wood wells, there have been unanticipated changes to the standard design and site-specific designs that require additional design efforts. These changes include incorporation of lessons learned after the startup and operation of the first two wells (Solaire and Westbrook) and the new equipment.

- Structural and mechanical changes to the building and equipment.
- Preparation of additional construction documents: There have been more plan review iterations required than originally anticipated that have extended the project schedule by six months, increased the number of allocated plan set submittals by approximately 50%, and subsequently will increase the level of effort required by Carollo Engineers.
- Additional electrical design is required, including design of a backup generator duct bank routing and electrical room changes to accommodate changes to the City's network cabinet.
- Additional survey work is needed due to the relocation of monitoring wells at both the Misty Wood and Campus Oaks Well sites as a result of the horizontal locations of existing on-site utilities differing from record drawings.
- Changes due to site-specific conditions that were not anticipated when the original scope of work was developed, such as the addition of an energy dissipation structure for storm drain outlet, design of a small sewer lift station and force main, and fiber optic routing.

Task 10.3 - Additional efforts for Engineering Services During Construction

Additional scope for engineering services during construction (ESDC) associated with the two additional ASR wells are due to unexpected field conditions that were discovered during construction that required re-design of some portions of the work.

FISCAL IMPACT

The requested budget adjustment of $1,028,656 for the Aquifer Storage and Recovery Wells – Design project will be funded from available resources in the Water Construction Fund. This amount will pay for the amendment with Carollo Engineers, Inc. bringing the new project budget to $7,699,742.

ENVIRONMENTAL REVIEW

Project level CEQA compliance for the ASR Program was previously evaluated in the 2012 ASR Program EIR (State Clearinghouse No. 2009072018), which was certified by City Council on March 29, 2012. The Campus Oaks and Misty Wood well sites were added to the ASR Program and evaluated in the Supplement to the ASR EIR (certified December 17, 2020). The proposed amendment and all actions authorized within it are consistent with the projects evaluated in the previously certified and adopted CEQA documents, no new affects would be expected to occur, and all applicable mitigation measures from the CEQA documents will be implemented. As such, no additional CEQA action is required at this time.

CITY COUNCIL STRATEGIC PLAN/OVERARCHING GOALS

4. Invest in well-planned infrastructure and growth

Respectfully Submitted,
Janice Gainey, Principal Engineer

Sean Bigley, Environmental Utilities Director

ATTACHMENTS:

1. Resolution 26-041
2. Third Amendment to Agreement
3. Ordinance 7048

REVIEWERS:

Janice Gainey, Environmental Utilities Department - Water	Created/Initiated - 2/3/2026
George Hanson, Environmental Utilities Department - Water	Approved - 2/10/2026
Devin Whittington, Environmental Utilities Department	Approved - 2/10/2026
Sean Bigley, Environmental Utilities Department - All	Approved - 2/11/2026
Kelly Aye, City Attorney Department	Approved - 2/12/2026
Katrina Six, City Clerk Department	Approved - 2/12/2026
Ryan DeVore, City Manager Department - Assistant City Manager	Approved - 2/17/2026
Dennis Kauffman, City Manager Department - Assistant City Manager	Approved - 2/17/2026
Michelle Sheidenberger, City Attorney Department	Approved - 2/18/2026
Dominick Casey, City Manager Department - City Manager	Approved - 2/18/2026
Katrina Six, City Clerk Department	Final Approval - 2/18/2026

RESOLUTION NO. 26-041

APPROVING A THIRD AMENDMENT TO PROFESSIONAL DESIGN SERVICES AGREEMENT, BY AND BETWEEN THE CITY OF ROSEVILLE AND CAROLLO ENGINEERS, INC., AND AUTHORIZING THE CITY MANAGER TO EXECUTE IT ON BEHALF OF THE CITY OF ROSEVILLE

WHEREAS, a Third Amendment to Professional Design Services Agreement for the Aquifer Storage Recovery Well and Pump Station Project, by and between the City of Roseville and Carollo Engineers, Inc., has been reviewed by the City Council; and

NOW, THEREFORE, BE IT RESOLVED by the Council of the City of Roseville that said third amendment is hereby approved and that the City Manager is authorized to execute it on behalf of the City of Roseville.

PASSED AND ADOPTED by the Council of the City of Roseville this ___ day of _____, 2026, by the following vote on roll call:

AYES COUNCILMEMBERS:

NOES COUNCILMEMBERS:

ABSENT COUNCILMEMBERS:

_____
MAYOR

ATTEST:

_____
City Clerk

THIRD AMENDMENT TO

PROFESSIONAL DESIGN SERVICES AGREEMENT

Aquifer Storage Recovery Well and Pump Station Project

THIS THIRD AMENDMENT TO PROFESSIONAL DESIGN SERVICES AGREEMENT is made and entered into this ___ day of _____, 20__, by and between the City of Roseville, a municipal corporation ("CITY"), and Carollo Engineers, Inc., a Delaware corporation ("CONSULTANT"); and

W I T N E S S E T H:

WHEREAS, CITY and CONSULTANT previously entered into a Professional Design Services Agreement dated April 1, 2020, amended on January 19, 2022 , and June 5, 2024 ("Agreement") regarding the design, construction, and installation for the Aquifer Storage Recovery Well and Pump Station Project ("Project"); and

WHEREAS, CITY desires to amend the Agreement to include additional services as described in CONSULTANT's letter/proposal dated November 5, 2025, which is attached hereto as Exhibit "A" and incorporated herein by reference; and

WHEREAS, CONSULTANT is willing and able to provide such additional services; and

NOW, THEREFORE, the parties agree as follows:

1. CONSULTANT shall provide additional services as described in Exhibit "A" of this Third Amendment to Agreement.

2. Exhibit "B" to the Agreement is hereby replaced with Exhibit "B" to this Third Amendment to Agreement, attached hereto and incorporated herein by reference, which reflects updated rates for the term of the Third Amendment to Agreement.

3. Section 2 of the Agreement is amended by adding an additional paragraph to read as follows:

"CITY shall pay one million, twenty-eight thousand, six hundred fifty-six dollars ($1,028,656), in consideration of the additional services as set forth in Exhibit "A" to the Third Amendment to Agreement. This brings the total not to exceed contract amount to seven million three hundred ninety-seven thousand six hundred eighty-nine dollars ($7,397,689)."

4. All other provisions of the Agreement shall remain unchanged and in full force and effect.

IN WITNESS WHEREOF, the City of Roseville, a municipal corporation, has authorized the execution of this Third Amendment to Agreement in duplicate by its City Manager and attested to by its City Clerk under the authority of Resolution No. _____, adopted by the Council of the City of Roseville on the ___ day of _____, 20__, and CONSULTANT has caused this Third Amendment to Agreement to be executed.

CITY OF ROSEVILLE, a municipal corporation	CAROLLO ENGINEERS, INC., a Delaware corporation
BY: _____	BY: _____
DOMINICK CASEY City Manager	its: Senior Vice President

(SIGNATURES CONTINUED ON NEXT PAGE)

and

ATTEST:

BY: Beverly Hamm
its: Vice President

BY: _____
CARMEN AVALOS
City Clerk

APPROVED AS TO FORM:

BY: _____
MICHELLE SHEIDENBERGER
City Attorney

APPROVED AS TO SUBSTANCE:

BY: S P Bigley
SEAN BIGLEY
Environmental Utilities Director

EXHIBIT “A”

AMENDMENT NO. 3 SCOPE OF SERVICES

City of Roseville
Environmental Utilities Department
Professional Design Services Agreement - Aquifer Storage and Recovery Wells Project
November 5, 2025

PURPOSE

The purpose of this Amendment 3 is to describe additional services to be provided by the Carollo Engineers consultant team to support the Aquifer Storage and Recovery (ASR) Wells Design Project.

This amendment incorporates two additions to scope of the Original Contract under Task 10.

1. Additional Design Work and Construction Documents.
2. Additional efforts required for Engineering Services During Construction.

Task 10. This task was identified in the original project proposal as "optional" and provided a scope and fee for Detailed Design and Engineering Services During Construction (ESDC) for four additional wells. Amendment 2 authorized this scope for two of the four originally contemplated additional wells; Well 13 Campus Oaks and Well 19 Misty Wood.

A description of the additional scope of work for each of these tasks is provided below. Task numbers have been selected to align with existing project scope tasks.

TASK 10 Detailed Design and Engineering Services During Construction For Campus Oaks And Misty Wood Wells

TASK 10 - BACKGROUND AND CONSIDERATIONS

As part of Environmental Utilities' long-term water supply planning, six sites were identified for well installations enabling the City to implement the conjunctive use of surface and groundwater to enhance water supply reliability. The new well facilities were to be constructed with the capability for groundwater extraction and surface water injection. This conjunctive use feature of the wells is more broadly termed Aquifer Storage and Recovery (ASR).
In April 2020 Carollo was awarded a Professional Design Services Agreement for Design and ESDCs for this project.

The approach and scope of services outlined in the original proposal identified the scope of services for the first two wells as "Package 1" and included the Well 9 Westbrook and Well 18 Solaire ASR wells. An optional task (Task 10) described the scope of services for four additional wells and described this as "Package 2". Amendment 2 split Package 2 into two parts.

Package 2 will now consist of the scope of services for just two (2) wells; Well 13 Campus Oaks and Well 19 Misty Wood. A future Package 3 is anticipated to provide scope of services for the final two wells.

TASK 10 - SCOPE

The scope of work for this Amendment 3 will be as described in Optional Task 10 from the original contract, with the exception that it is for two wells instead of four. An outline of that scope is included here with full details included in the original contract.

TASK 10 – Detailed Design and ESDC for 2 Additional Wells (Campus Oaks and Misty Wood). Under this optional task detailed design and ESDC will be performed for the 2 additional wells previously implemented through the PDR phase. It is assumed that the detailed design of these two well sites (Package 2) will be similar in concept to the previous Package 1 well designs, with minor modifications to account for well and site characteristics only.

TASK 10.1 - CONSTRUCTION DOCUMENTS

Under this task Carollo will further develop sets of detailed design drawings and construction specifications for this project: one for construction of each of the 2 additional ASR well sites.

The mechanical, process, structural, electrical, and instrumentation design from the first two ASR wells, Well 9 Westbrook and Well 18 Solaire, was intended to be the standard design that would be used as the template for four additional ASR wells. It was expected that the civil site and utility plans would differ slightly since they are site dependent.

During the design and startup of construction of the Campus Oaks and Misty Wood wells there have been unanticipated changes to the standard design and site-specific designs requiring additional design efforts.

A. Standard Design Revisions

There were many small changes made to the first two wells, Well 9 Westbrook and Well 18 Solaire, design during construction which were incorporated into the record drawings and became a revised standard design to be implemented on the next 4 wells. During design of the next two wells, Well 13 Campus Oaks and Well 19 Misty Wood, some significant changes were made to the standard design because of lessons learned after the startup and operation of the first two wells and equipment updates. These changes required additional design efforts and included the following.

- **Structural and Mechanical changes to the building and equipment**
    - The standard structural design was edited to add a separate chemical trench drain and pipe chase from the chemical to the pump room, and relocate the chemical sump, water softener, and rollup door within the chemical room.
    - The pre-engineered perimeter wall was replaced with a CMU block wall due to limitations to accessorizing the wall for equipment mounting and screening alternatives (lights and security cameras).

- The structural building design was updated to reduce the weight of the blocks for value engineering. The Contractor added value engineering for the CMU building and the perimeter wall by reducing the block size and weight. Both of which required additional engineering calculations and re-design.
- The vertical strainer and angle pressure reducing valve were repositioned into a horizontal arrangement which changed the layout of the above ground mechanical piping, the model of the magnetic flow meter, chemical injection points, and tubing layout.
- The small diameter and distant location of the existing monitoring wells changed the sampling and testing plan. After consideration, the sampling pumps and conductivity analyzers were removed from the design and replaced with a manual sampling program.
- The preferred sodium hypochlorite system installed at the first two wells proved to be difficult, so a new chemical meter pump was designed and specified.

- **Additional preparation of construction documents**
  - There were more plan review iterations than originally anticipated that pushed back the project schedule and increased the level of effort and the number of allocated submittals.

- **Additional Electrical Design**
  - Addition of a permanent generator duct bank routing under the building slab modifications to the slab foundation and utility plans was required.
  - The electrical equipment in the electrical room was shifted to accommodate changes to the City network cabinet.
  - Electrical equipment in the pump room was relocated to allow better access to the mechanical equipment.

- **Additional Survey Work**
  - An additional topographic survey was completed because the monitoring well was installed on the opposite side of the site causing the civil layout to be rearranged.
  - Another topographic survey was performed after Painted Desert Drive was constructed because the horizontal locations of the utilities differed from the design drawings. The large water service and the power conduits were realigned because they did not line up with the perimeter wall, building, well, storm drain, and transformer locations.

B. Site Specific Conditions

Based on record drawings there were some assumptions made in the original scope of work and budget that wet and dry utility services are available at the back of curb. Site specific conditions requiring additional design efforts included the following.

- At the Misty Wood site an energy dissipation structure was added to the storm drain outlet and cross culvert to accommodate well flushing flow rates.
- A gravity sewer lateral was not supplied to the Misty Wood site. Two additional topographic surveys and associated planning were performed to explore two

alternative gravity sewer routes. In the end a small sewer lift station and force main were designed.
- Fiber Optic was not provided to the Campus Oaks site as described in the Development Agreement and was designed by Carollo.

TASK 10.3 - ENGINEERING SERVICES DURING CONSTRUCTION (PACKAGE 2)

Additional scope for engineering services during construction (ESDC), associated with the two additional ASR wells are due to unexpected field conditions that were discovered during construction that required re-design of some portions of the work.

There were some unexpected field conditions discovered during the initial phases of construction that increased the level of effort required to promptly respond to RFIs, Design Clarifications, and Contract Change Orders during construction. The design-assist team including the Engineer, Contractor, Construction Manager, and the City collaborated to make the necessary changes quickly to keep the project on schedule to meet the funding deadline.

Changes made during construction included aesthetic and structural alterations to the CMU perimeter wall due to public opinion, a wall back drain system that was added when a perched groundwater table was discovered during rough grading, additional scope to provide fiber optic cable to the sites because it was not installed as previously coordinated, and multiple revisions to the underground utility plans for power, water, sewer, and storm drain that were required to account for the differences in what was shown in the record utility drawings and what was found in the field.

TASK 10 - COST

Task 10.1 fees are for effort required to make modifications to the standard design between the construction of the first two wells Well 9 Westbrook and Well 18 Solaire Well and the construction of the next two wells, Well 13 Campus Oaks and Well 19 Misty Wood.

The fees for Task 10.3 are for the additional ESDC effort to account for unexpected field conditions discovered during construction and to continue ESDC services throughout construction including the review of equipment and materials submittals, respond to requests for information and design clarifications, progress and special meetings, field visits, start-up and commissioning, operator training, record drawings, and asset management.

The estimated cost to complete the detailed design and ESDC services for the next two wells, Well 13 Campus Oaks and Well 19 Misty Wood is $1,028,656. These costs are effective until January 2027. Cost for Task 10 is detailed in the attached fee proposal; **Attachment A**. Costs will be billed monthly on a time and materials not-to-exceed basis. Hourly rates are shown in the attached Fee Schedule, **Attachment B**.

TASK 10 - SCHEDULE

The schedule of completion for the work described in this base scope of services is for the approximately 12 months remaining of the original 18 months from the Notice to Proceed.

ATTACHMENTS

Attachment A – Amendment 3 Fee Proposal

Attachment B – Fee Schedule

CITY OF ROSEVILLE
ASR WELL & PUMP STATION PROJECT
ATTACHMENT A - FEE PROPOSAL

carollo
Engineers...Working Wonders With Water®

		Carollo Engineers, Inc.																			PROJECT TOTAL
		PIC	Advisor	Sr. PM	PM	Arch Lead	Str. PE	Staff Eng.	Elec	IC	SCADA	HVAC	Asset Mgmt	Sr. CAD Tech	CAD Tech	Doc. Process.	Total Hours	Labor Cost	PECE[1]	Expenses	Carollo Subtotal	
		Hann	Peterson	Cleveland	Ducker	Architect	Structural	Project Engineer	Electrical	Instr & Controls	SCADA	HVAC	Staff									
	2025 Rates	$337	$337	$337	$337	$354	$337	$232	$375	$285	$232	$285	$232	$243	$175	$150			$16			
	2026 Rates	$351	$351	$351	$351	$369	$351	$242	$390	$297	$242	$297	$242	$253	$182	$156			$17			
Task	Task Description																					
OPTIONAL SCOPE																						
10	Scope for 4 Well Sites Tasks 5-8.9																					
10.1	Construction Docs for 4 Addt'l Wells	10		10	434	44	110	542	44	44		12		160	160	**16**	1,586	$ 433,128	$ 25,376		$ 458,504	$ 458,504
10.2	Permit Assistance for 4 Addt'l Wells																-	$ -	$ -		$ -	$ -
10.3	ESDC for 4 Addt'l Wells	12	-	12	600	52	104	520	104	104		52	72	72	72	**16**	1,792	$ 538,688	$ 30,464	$ 1,000	$ 570,152	$ 570,152
	TASK 10 TOTAL	**22**	**-**	**22**	**1,034**	**96**	**214**	**1,062**	**148**	**148**	**-**	**64**	**72**	**232**	**232**	**32**	**3,378**	**$ 971,816**	**$ 55,840**	**$ 1,000**	**$ 1,028,656**	**$ 1,028,656**

Notes:
[1] Project Equipment and Communication Expense.
[2] Field services for test well drilling and geotechnical borings include prevailing wages and certfifed payroll in accordance with local, state, and federal laws.

EXHIBIT “B”

CAROLLO ENGINEERS, INC.
FEE SCHEDULE

As of January 1, 2025

Billing Classification	Hourly Rate
Engineers/Scientists	
Senior Project Manager	$ 364.00
Project Manager	$ 364.00
Senior Design Manager	$ 364.00
Senior Program Manager	$ 364.00
Program Manager	$ 304.00
Principal Professional	$ 364.00
Senior Service Delivery Lead	$ 364.00
Service Delivery Lead	$ 359.00
Supervising Professional	$ 361.00
Design Manager II	$ 366.00
Design Manager I	$ 275.00
Senior Professional	$ 282.00
Lead Professional	$ 265.00
Professional	$ 233.00
Staff Professional	$ 226.00
Engineering Intern	$ 141.00
Supervising Analyst	$ 284.00
Senior Analyst	$ 263.00
Lead Analyst	$ 236.00
Staff Analyst	$ 217.00
Technicians	
Supervising BIM Designer	$ 313.00
Senior BIM Designer	$ 265.00
Lead BIM Designer	$ 260.00
BIM Designer 3	$ 233.00
BIM Designer 2	$ 225.00
BIM Designer 1	$ 221.00
Supervising Designer	$ 245.00
Lead Designer	$ 237.00
Senior Designer	$ 210.00
Designer	$ 179.00
Staff Designer	$ 181.00
Senior Drafter	$ 175.00
CAD Drafter	$ 161.00
Construction Management and Operations	

CAROLLO ENGINEERS, INC.

FEE SCHEDULE
As of January 1, 2025

Billing Classification	Hourly Rate
Senior Construction Manager	$ 364.00
Principal Construction Manager	$ 347.00
Construction Manager	$ 337.00
Supervising Cost Estimator	$ 350.00
Lead Cost Estimator	$ 233.00
Resident Project Representative	$ 305.00
Lead Inspector	$ 259.00
Inspector	$ 243.00
Resident Engineer	$ 223.00
Principal Operations Specialist	$ 335.00
Operations Lead	$ 364.00
Operations Specialist	$ 305.00
Field Professional	$ 238.00
Support Staff	
Senior Project Services Administrator	$ 254.00
Project Services Administrator	$ 202.00
Lead Document Processor	$ 198.00
Document Processor II	$ 172.00
Document Processor I	$ 157.00
Administrative Assistant	$ 141.00

Project Equipment Communication Expense (PECE) Per DL Hour **$ 16.00**

Other Direct Expenses

Travel and Subsistence	Cost + 10%
Mileage	$ 0.70 per mile
Subconsultant	Cost + 10%
Other Direct Cost	Cost + 10%
Expert Witness	Hourly Rate x 2.0

This fee schedule is subject to annual revisions due to labor adjustments.

ORDINANCE NO. 7048

ORDINANCE OF THE COUNCIL OF THE CITY OF ROSEVILLE AUTHORIZING CERTAIN AMENDMENTS TO THE FISCAL YEAR 2025-26 BUDGET AND DECLARING THIS ORDINANCE TO BE IMMEDIATELY EFFECTIVE AS AN APPROPRIATION MEASURE

THE CITY OF ROSEVILLE ORDAINS:

SECTION 1. The City of Roseville Annual Budget, Fiscal Year 2025-26, is hereby amended as listed on the attached budget adjustment for the Aquifer Storage Recovery Well and Pump Station Project.

SECTION 2. This ordinance is hereby declared to be an appropriation measure, immediately effective pursuant to the provisions of Section 5.03 of the Charter.

SECTION 3. The City Clerk is hereby authorized and directed to post a true copy of the foregoing ordinance in each of three (3) conspicuous locations in the City and she shall immediately after such posting enter in the ordinance book, under the record of the ordinance, a certificate under her hand stating the time and place of such publication by posting.

PASSED AND ADOPTED by the Council of the City of Roseville, this _____day of_____, 2026, by the following vote on roll call:

AYES COUNCILMEMBERS:

NOES COUNCILMEMBERS:

ABSENT COUNCILMEMBERS:

_____
MAYOR

ATTEST:

_____
City Clerk

REQUEST FOR BUDGET ADJUSTMENT

Updated 11/19/2025

Please complete the cells highlighted in yellow.

REQUESTER NAME & TITLE:	Janice Gainey, Principal Engineer	FISCAL YEAR:	2025-26
PREPARER NAME & TITLE:	Linda York, EU Business Analyst	ORDINANCE:	
DEPARTMENT/DIVISION:	EU Water Engineering and Hydrology		

EXPENDITURES/EXPENSES/TRANSFERS OUT

ACCOUNT STRING				BUDGET ($)	DESCRIPTION
Fund	Account	Center	Project	Adjustment	
6120	5301	84001	500155	1,028,656	Increase professional services budget for Aquifer Storage and Recovery Well - Design Project 500155
EXPENDITURES/EXPENSES/TRANSFERS OUT TOTAL				1,028,656	

REVENUES/TRANSFERS IN

ACCOUNT STRING				BUDGET ($)	DESCRIPTION
Fund	Account	Center	Project	Adjustment	
REVENUES/TRANSFERS IN TOTAL				-	

NET ADJUSTMENT	1,028,656	

FUND BALANCE

ACCOUNT STRING				BUDGET ($)	DESCRIPTION
Fund	Account	Center	Project	Adjustment	
6120	3601	00000	000000	(1,028,656)	Decrease available resources in the Water Construction Fund (6120)
	3601	00000	000000		
	3601	00000	000000		
	3601	00000	000000		
	3601	00000	000000		
	3601	00000	000000		
FUND BALANCE TOTAL				(1,028,656)	

Justification for Budget Adjustment:

The Aquifer Storage and Recovery (ASR) Well - Design Project (500155) requires a Third Amendment with Carollo Engineers for $1,028,656. During the design and startup of construction of the Campus Oaks and Misty Wood wells there have been unanticipated changes to the standard design and site-specific designs requiring additional design efforts. These changes included incorporation of lessons learned after the startup and operation of the first two wells and the new equipment. Additional scope is required for engineering services during construction (ESDC) associated with the two additional ASR wells due to unexpected field conditions that were discovered during construction that required re-design of some portions of the work. The existing project budget currently is $6,671,086; this budget adjustment would bring the new project budget total to $7,699,742.□

City Council Communication

Meeting Date: 3/4/2026
Item #: VII.4
File #: 0323
Item ID: 2026-67

Title:	Roseville Municipal Code Ordinance - Military Equipment Policy
Contact:	Scott Blynn 916-774-5079 sblynn@roseville.ca.us

SUMMARY

Staff recommends adoption of findings pursuant to California Government Code Section 7071 and 7072, and introduce for first reading an ordinance renewing Ordinance 6463 and readopting and continuing Roseville Police Department Policy No. 706, titled “Military Equipment”, thereby authorizing the Roseville Police Department’s continued use of “military equipment”, as defined by Government Code Section 7070.

RECOMMENDATION

Staff recommends the City Council adopt findings pursuant to California Government Code Section 7071 and 7072, and introduce for first reading an ordinance renewing Ordinance 6463 and readopting and continuing Roseville Police Department Policy No. 706, titled “Military Equipment”, thereby authorizing the Roseville Police Department’s continued use of “military equipment”, as defined by Government Code Section 7070.

BACKGROUND

Brief History of AB 481

Assembly Bill 481 (“AB 481”), signed by Governor Newsom in September 2021, required that law enforcement agencies obtain approval from the agency’s governing body (here, the City Council) prior to purchasing or acquiring military equipment, using military equipment, and/or collaborating with other law enforcement agencies in the deployment or use of military equipment within the governing body’s territorial jurisdiction.

Such approval by the City Council was required to be in the form of an Ordinance, adopting a publicly released, written military equipment policy. AB 481 also required that the military equipment policy address a number of specific topics, including the type, quantity, capabilities, purposes, and authorized uses of each type of military equipment, the fiscal impact of their acquisition and use, the legal and procedural rules that govern their use, the training required by any officer allowed to use the equipment, the mechanisms in place to ensure policy compliance, and the procedures by which the public may submit complaints. To adopt such an Ordinance, the City Council was also required to make the following findings:

1. The military equipment is necessary because there is no reasonable alternative that can achieve the same objective of officer and civilian safety.
2. The proposed military equipment use policy will safeguard the public’s welfare, safety, civil rights, and civil liberties.
3. If purchasing the equipment, the equipment is reasonably cost effective compared to available alternatives that can achieve the same objective of officer and civilian safety.

4. Prior military equipment use complied with the military equipment use policy that was in effect at the time, or if prior uses did not comply with the accompanying military equipment use policy, corrective action has been taken to remedy nonconforming uses and ensure future compliance.

City's Original Adoption of Military Equipment Policy

At its March 1, 2022 meeting, the City Council was presented with Ordinance 6463, which included the findings required by AB 481 and, if adopted, would approve and adopt a Military Equipment policy for the Roseville Police Department. The City Council elected to move forward with the Military Equipment Policy and introduced Ordinance 6463 for first reading that evening. At its March 15, 2022 meeting, the City Council completed the second reading and adopted Ordinance 6463, thereby approving and adopting Roseville Police Department Policy No. 706, titled "Military Equipment".

Annual Review and Renewal of Military Equipment Policy

AB 481 further requires that the City Council review any ordinance adopted pursuant to AB 481 at least annually, and to vote on whether to "renew" the ordinance. In making this decision, the City Council is required to determine whether each type of military equipment owned by the City complied with the findings originally made during adoption of the ordinance. This determination is to be based on an annual "report" prepared by the Police Department that includes at least the following information for each type of military equipment approved for use:

1. A summary of how the military equipment was used and the purpose of its use.
2. A summary of any complaints or concerns received concerning the military equipment.
3. The results of any internal audits, any information about violations of the military equipment use policy, and any actions taken in response.
4. The total annual cost for each type of military equipment, including acquisition, personnel, training, transportation, maintenance, storage, upgrade, and other ongoing costs, and from what source funds will be provided for the military equipment in the calendar year following submission of the annual military equipment report.
5. The quantity possessed for each type of military equipment.
6. If the law enforcement agency intends to acquire additional military equipment in the next year, the quantity sought for each type of military equipment.

This annual report must also be made publicly available on the Police Department's website, and the Department must hold at least one well-publicized and conveniently located community engagement meeting at which the general public may discuss and ask questions regarding the annual military equipment report and the Department's funding, acquisition, or use of military equipment.

Prior Renewals

The City's Military Equipment policy for the Roseville Police Department was renewed for the first time in 2023. The Roseville Police Department prepared an Annual Report that covered the initial reporting period of April 16, 2022 (the day the Department's Military Equipment Policy first became effective) to December

31, 2022. The Report included all of the information required by AB 481, was published on the Department's webpage, and the Roseville Police Department held the requisite community engagement meeting. In March 2023, the City Council introduced and thereafter approved an uncodified ordinance readopting and continuing the Roseville Police Department's Military Equipment Policy. The Military Equipment Policy has been renewed in the same manner each year since.

Roseville Police Department Annual Report & Current Renewal of the Military Equipment Policy

The Roseville Police Department has prepared an Annual Report that covers the reporting period of January 1, 2025 to December 31, 2025. The Report, attached herewith, includes all of the information required by AB 481 and was published on the Department's webpage on February 5, 2026. The Roseville Police Department also held a community engagement meeting on February 10, 2026, at 5:00 p.m. at the Roseville Police Department. The general public was invited to attend the meeting to discuss and ask questions regarding the annual military equipment report and the Department's funding, acquisition, or use of military equipment. Notice of the meeting was published on the City's main webpage, the City events calendar, and the City's and Police Department's social media pages. Approximately 4 members of the community attended the meeting, and no community members expressed any opposition to or concern with the Annual Report or the Department's Military Equipment Policy.

Council Action to Renew the Ordinance and Military Equipment Policy

As noted above, AB 481 requires that the City Council "review" the military equipment ordinance, annual report, and policy, and make a determination as to whether the type of military equipment included in the policy has complied with the standards of approval originally adopted by Council. If determined to comply, the governing body can "vote to renew the ordinance" and the corresponding Military Equipment Policy. Because "renewal" of an ordinance is not a traditional City action, it is recommended that Council adopt a new uncodified ordinance making all relevant findings, renewing Ordinance 6463, and readopting and continuing the Roseville Police Department's Military Equipment Policy. No substantive changes are being made to the Military Equipment Policy. Copies of the proposed ordinance and Roseville Police Department Policy No. 706, titled "Military Equipment", are attached. It is recommended that Council introduce for first reading an uncodified ordinance renewing Ordinance 6463 and readopting and continuing Roseville Police Department Policy No. 706, titled "Military Equipment", which will allow for the continued use of "military equipment" as defined by Government Code section 7070.

FISCAL IMPACT

There is no fiscal impact associated with the proposed policy as the equipment identified in the "Military Equipment" policy has already been budgeted for and acquired. Any future equipment would be subject to approved budgets at the time of acquisition and approval.

ENVIRONMENTAL REVIEW

The California Environmental Quality Act (CEQA) does not apply to activities that will not result in a direct or reasonably foreseeable indirect physical change in the environment, or is otherwise not considered a project as defined by CEQA Statute Section 21065 and CEQA State Guidelines Section 15060(c)(3) and Section 15378. The proposed Ordinance meets the above criteria and is not subject to CEQA. No additional environmental review is required.

CITY COUNCIL STRATEGIC PLAN/OVERARCHING GOALS

1. Ensure a safe and healthy community
5. Support community engagement and advocacy
6. Deliver exceptional City services

Respectfully Submitted,
Scott Blynn, Police Lieutenant

Troy Bergstrom, Police Chief

ATTACHMENTS:

1. Ordinance renewing Military Equipment Policy (2026)
2. 2026 Annual Report (combined)
3. Policy 706 Military Equipment
4. Ordinance_6463_(final_signed) (1)

REVIEWERS:

Travis Cochran, City Attorney Department	Created/Initiated - 2/11/2026
Liz Luevano, City Clerk Department	Approved - 2/13/2026
Troy Bergstrom, Police Department	Approved - 2/16/2026
Kelly Aye, City Attorney Department	Approved - 2/17/2026
Katrina Six, City Clerk Department	Approved - 2/17/2026
Ryan DeVore, City Manager Department - Assistant City Manager	Approved - 2/17/2026
Dennis Kauffman, City Manager Department - Assistant City Manager	Approved - 2/17/2026
Michelle Sheidenberger, City Attorney Department	Approved - 2/18/2026
Dominick Casey, City Manager Department - City Manager	Approved - 2/18/2026
Katrina Six, City Clerk Department	Final Approval - 2/19/2026

ORDINANCE NO. ___

RENEWING CITY OF ROSEVILLE ORDINANCE 6463 AND READOPTING AND CONTINUING ROSEVILLE POLICE DEPARTMENT POLICY NO. 706, TITLED "MILITARY EQUIPMENT"

THE CITY OF ROSEVILLE ORDAINS:

SECTION 1.

A. On September 30, 2021, Governor Gavin Newsom signed into law Assembly Bill 481, relating to the use of military equipment by law enforcement agencies. Assembly Bill 481, codified at California Government Code sections 7070 through 7075, requires law enforcement agencies to obtain approval of the applicable governing body, by an ordinance adopting a "military equipment" use policy, at a regular meeting held pursuant to open meeting laws, prior to taking certain actions relating to the funding, acquisition, or use of military equipment. The term "military equipment" is defined in California Government Code section 7070(c). Assembly Bill 481 allows the governing body of a city to approve the funding, acquisition, and/or use of military equipment within its jurisdiction only if it makes specified findings.

B. At its March 1, 2022 meeting, the City Council was presented with Ordinance 6463, which included the findings required by AB 481 and, if adopted, would approve and adopt a Roseville Police Department Policy No. 706, titled "Military Equipment". The proposed Military Equipment Policy was consistent with AB 481 and based on a model policy utilized by many other law enforcement agencies in California. The City Council elected to move forward with the Military Equipment Policy and introduced Ordinance 6463 for first reading that evening.

C. At its March 15, 2022 meeting, the City Council completed the second reading and adopted Ordinance 6463, thereby approving and adopting Roseville Police Department Policy No. 706, titled "Military Equipment". Through adoption of Ordinance 6463, the City Council also made the following findings:

1. The "military equipment" (as defined by California Government Code section 7070(c)) is necessary because there is no reasonable alternative that can achieve the same objective of officer and civilian safety;

2. The "Military Equipment" Policy No. 706 will safeguard the public's welfare, safety, civil rights, and civil liberties;

3. The current "military equipment" identified in "Military Equipment" Policy No. 706 and purchasing any future "military equipment" on the list of "military equipment" (as defined by California Government Code section 7070(c)) is reasonably cost effective compared to available

alternatives that can achieve the same objective of officer and civilian safety; and

4. Prior "military equipment" use complied with the military equipment use policy that was in effect at the time.

D. AB 481 further requires that the City Council review any ordinance adopted pursuant to AB 481 at least annually, and to vote on whether to "renew" the ordinance. In making this decision, the City Council is required to determine whether each type of military equipment owned by the City complied with the findings originally made during adoption of the ordinance. This determination is to be based on an annual report prepared by the Police Department that includes at least the following information for each type of military equipment approved for use:

1. A summary of how the military equipment was used and the purpose of its use;

2. A summary of any complaints or concerns received concerning the military equipment;

3. The results of any internal audits, any information about violations of the military equipment use policy, and any actions taken in response;

4. The total annual cost for each type of military equipment, including acquisition, personnel, training, transportation, maintenance, storage, upgrade, and other ongoing costs, and from what source funds will be provided for the military equipment in the calendar year following submission of the annual military equipment report;

5. The quantity possessed for each type of military equipment; and

6. If the law enforcement agency intends to acquire additional military equipment in the next year, the quantity sought for each type of military equipment.

The annual report must also be made publicly available on the Roseville Police Department's webpage, and the Department must also hold at least one well-publicized and conveniently located community engagement meeting at which the general public may discuss and ask questions regarding the annual military equipment report and the Department's funding, acquisition, or use of military equipment.

E. On February 5, 2026, the Roseville Police Department published its Annual Report regarding AB 481 and the Military Equipment Policy to the Department's webpage. The Report covers the reporting period of January 1,

2025, through December 31, 2025, and includes all information required by AB 481. The Roseville Police Department also held a community engagement meeting on February 10, 2026, at 5:00 p.m. at the Roseville Police Department. The meeting was well-publicized, and the general public was invited to attend to discuss and ask questions regarding the annual military equipment report and the Department's funding, acquisition, or use of military equipment.

F. On March 4, 2026, the Annual Report for the period of January 1, 2025 through December 31, 2025, regarding AB 481 and the City of Roseville Police Department's Military Equipment Police was submitted to the City Council pursuant to Government Code section 7072.

SECTION 2. The City Council of the City of Roseville makes the following findings:

A. The City Council has reviewed Ordinance 6461, which was adopted pursuant to AB 481 and approved the funding, acquisition, or use of "military equipment" and approved and adopted Roseville Police Department Policy No. 706, titled "Military Equipment".

B. The City Council was presented with the Annual Report, covering the period of January 1, 2025 through December 31, 2025, prepared by the Roseville Police Department pursuant to Government Code sections 7071 and 7072.

C. Based on the Annual Report prepared by the Roseville Police Department and submitted to the City Council, the City Council determines that each type of "military equipment" identified in the Report has complied with the standards of approval set forth in Government Code section 7071, subsection (d), and adopted by the City Council through Ordinance 6463.

D. The Roseville Police Department Policy No. 706, titled "Military Equipment", meets all requirements of Government Code sections 7070 – 7075.

E. Ordinance 6463 is renewed and Roseville Police Department Policy No. 706, titled "Military Equipment", is approved and readopted.

SECTION 3. This ordinance shall be effective at the expiration of thirty (30) days from the date of its adoption.

SECTION 4. The City Clerk is hereby directed to cause this ordinance to be published in full at least once within fourteen (14) days after it is adopted in a newspaper of general circulation in the City, or shall within fourteen (14) days after its adoption cause this ordinance to be posted in full in at least three (3) public places in the City and enter in the Ordinance Book a certificate stating the time and place of said publication by posting.

PASSED AND ADOPTED by the Council of the City of Roseville this ___ day of _____, 20__, by the following vote on roll call:

AYES COUNCILMEMBERS:

NOES COUNCILMEMBERS:

ABSENT COUNCILMEMBERS:

_____
MAYOR

ATTEST:

_____
City Clerk

ROSEVILLE POLICE DEPARTMENT

2026 ANNUAL REPORT

ASSEMBLY BILL 481 - MILITARY EQUIPMENT

Title: 2026 Annual report for Military Equipment Policy Pursuant to California Assembly Bill 481

Contact: Troy Bergstrom, Chief of Police (916) 774-5010, tbergstrom@roseville.ca.us

Jeff Beigh, Captain (916) 774-5041, jbeigh@roseville.ca.us

Scott Blynn, Lieutenant 916-746-1076, sblynn@roseville.ca.us

BACKGROUND

AB 481

Assembly Bill 481 requires that law enforcement agencies obtain approval from the agency's governing body prior to purchasing, raising funds for, or acquiring "military equipment", using "military equipment", and collaborating with other law enforcement agencies in the deployment or use of "military equipment" within the governing body's territorial jurisdiction. AB 481 requires the Police Department to annually provide public notice of these requirements which is the purpose of this posting.

The term "military equipment", as used in AB 481, does not necessarily indicate equipment that has been used by the military, obtained from the military, or is even considered military grade. Pursuant to AB 481, items deemed to be "military equipment" include, but are not limited to, unmanned aerial or ground vehicles (i.e. drones or bomb disposal robots), armored vehicles, command post vehicles, battering rams, pepper balls, "bean bag" launchers, "rubber bullets", and commonly used long rifles. AB 481's intent is to increase transparency, accountability and oversight surrounding the acquisition and use of the designated "military equipment" by state and local law enforcement. After initial approval by the City Council, AB 481 requires that our Department receive approval for the use of "military equipment" and to submit annual reports to the City Council regarding the use of the equipment, any complaints received, any internal audits or other information about violations of the military equipment use policy, the cost and quantity of each type of military equipment, and the quantity of military equipment if the agency intends to acquire additional military equipment in the next year.

The City Council is required to review any ordinance it has adopted at least annually and vote on whether to renew the ordinance at a regular, public meeting.

Roseville Police Department's "Military Equipment" Policy

The Roseville Police Department's "Military Equipment" policy complies with AB 481 and is based on a model policy utilized by many other law enforcement agencies in California. The "Military Equipment" policy is reviewed annually and published on the Roseville Police Department's website.

ANNUAL REPORTING

The Roseville Police Department is required to prepare an annual report for its governing body on the status of the military equipment program. The report must be made publically available on the department's website for as long as the military equipment is available for use, and the report must include, at a minimum, all information as required by Government Code § 7072. This annual military equipment covers the period of January 1, 2025 to December 31, 2025.

Use of Equipment

All "Military Equipment" maintained by the Roseville Police Department is intended to be used to support law enforcement operations in order to safeguard the public's welfare, safety, civil rights, and civil liberties. Any Military Equipment used during the reporting period was consistent with such intended use and pursuant to the Department's Military Equipment Policy. Attached as Appendix A to this report is a summary of the equipment used and the purpose of the use during the reporting period.

Civilian Complaint Reporting

The Roseville Police Department maintains a procedure for citizens to report a complaint or concern associated with the Department. The Roseville Police Department has not received any complaints from the public during the reporting period regarding the intended or actual use of Military Equipment or the Department's Military Equipment Policy.

Internal Audits

The Roseville Police Department has assigned a designee to act as the Military Equipment Coordinator. The Military Equipment Coordinator, among other duties, conducts an annual inventory of all equipment listed under the "Military Equipment" policy. The Roseville Police Department has all equipment listed under this policy documented and accounted for. There have been no reports or complaints of violations of the Military Equipment Policy during the reporting period, and no internal audits have indicated any violations or misuse.

Fiscal Impact

There is no fiscal impact associated with equipment identified under the "Military Equipment" policy, as the equipment has already been acquired and budgeted for. Any future equipment would be subject to approved budgets at the time of acquisition and approval. Attached as Appendix B to this report is the Roseville Police Department's current inventory of Military Equipment. Appendix B lists any initial and ongoing costs associated with the Military Equipment. All Military Equipment is funded by City of Roseville general funds allocated to the Roseville Police Department unless otherwise indicated on the current inventory list (e.g., paid for by another local agency, grant funded, etc.).

Quantity Possessed

The Roseville Police Department maintains an updated list of "Military Equipment" in its inventory. Attached as Appendix B to this report is the current list of qualifying equipment maintained by the Department.

Intent to Acquire Additional Military Equipment

During the next calendar year for reporting purposes (January 1, 2026 – December 31, 2026), the Roseville Police Department does not intend to acquire new equipment that is not already listed on the current Military Equipment inventory (Appendix B). The Department does intend on replacing old equipment that is nearing the end of its expected lifespan, but this will be replacement only and it will not expend existing quantities.

Respectfully submitted,



Chief Troy Bergstrom

DATE	MILITARY EQUIPMENT USED	REASON FOR USE
Jan 1st, 2025	Mavic 3 Thermal	UAS - Patrol Assist
Jan 4th, 2025	Mavic 3 Thermal	UAS - Patrol Assist
Jan 9th, 2025	Mavic 3 Thermal	UAS - Patrol Assist
Jan 9th, 2025	Bearcat	Patrol Assist Search/Arrest Warrant SWAT call-out
Jan 9th, 2025	TRV	Patrol Assist Search/Arrest Warrant SWAT call-out
Jan 9th, 2025	TAG SWAT Sprinter Van	Patrol Assist Search/Arrest Warrant SWAT call-out
Jan 9th, 2025	40 MM CS Barricade 4330	Patrol Assist Search/Arrest Warrant SWAT call-out
Jan 9th, 2025	40 MM Baton Extended	Patrol Assist Search/Arrest Warrant SWAT call-out
Jan 9th, 2025	9 Bang Flashbang	Patrol Assist Search/Arrest Warrant SWAT call-out
Jan 12th, 2025	Mavic 3 Thermal	UAS - Patrol Assist
Jan 13th, 2025	Mavic 3 Thermal	UAS - Patrol Assist
Jan 15th, 2025	Mavic 3 Thermal	UAS - Patrol Assist
Jan 15th, 2025	TAG SWAT Sprinter Van	Patrol Assist Arrest Warrant SWAT call-out
Jan 24th, 2025	Avata 2	UAS - Patrol Assist
Jan 24th, 2025	Bearcat	Patrol Assist Search/Arrest Warrant SWAT call-out

Jan 24th, 2025	TRV	Patrol Assist Search/Arrest Warrant SWAT call-out
Jan 24th, 2025	TAG SWAT Sprinter Van	Patrol Assist Search/Arrest Warrant SWAT call-out
Jan 26th, 2025	Avata 2	UAS - Patrol Assist
Jan 26th, 2025	Mavic 3 Thermal	UAS - Patrol Assist
Jan 30th, 2025	Avata 2	UAS - Patrol Assist
Jan 30th, 2025	Mavic 3 Thermal	UAS - Patrol Assist
Jan 30th, 2025	Bearcat	Patrol Assist Search Warrant SWAT call-out
Jan 30th, 2025	TRV	Patrol Assist Search Warrant SWAT call-out
Jan 30th, 2025	TAG SWAT Sprinter Van	Patrol Assist Search Warrant SWAT call-out
Jan 30th, 2025	Bearcat	Patrol Assist Search Warrant SWAT call-out
Jan 30th, 2025	TRV	Patrol Assist Search Warrant SWAT call-out
Jan 30th, 2025	TAG SWAT Sprinter Van	Patrol Assist Search Warrant SWAT call-out
Jan 31st, 2025	ICOR Robot	Patrol Assist suspicious package
Feb 4th, 2025	Mavic 3 Thermal	UAS - Patrol Assist
Feb 4th, 2025	Avata 2	UAS - Patrol Assist
Feb 4th, 2025	Bearcat	Patrol Assist Search/Arrest Warrant SWAT call-out
Feb 4th, 2025	TRV	Patrol Assist Search/Arrest Warrant SWAT call-out

Feb 4th, 2025	TAG SWAT Sprinter Van	Patrol Assist Search/Arrest Warrant SWAT call-out
Feb 4th, 2025	Flashbang	Patrol Assist Search/Arrest Warrant SWAT call-out
Feb 8th, 2025	Mavic 3 Thermal	UAS - Patrol Assist
Feb 9th, 2025	Mavic 3 Thermal	UAS - Patrol Assist
Feb 9th, 2025	Mavic 3 Thermal	UAS - Patrol Assist
Feb 9th, 2025	Avata 2	UAS - Patrol Assist
Feb 10th, 2025	Mavic 3 Thermal	UAS - Patrol Assist
Feb 10th, 2025	Mavic 3 Thermal	UAS - Patrol Assist
Feb 10th, 2025	Mavic 3 Thermal	UAS - Patrol Assist
Feb 11th, 2025	Mavic 3 Thermal	UAS - Patrol Assist
Feb 12th, 2025	Mavic 3 Thermal	UAS - Patrol Assist
Feb 12th, 2025	Bearcat	Patrol Assist Search/Arrest Warrant SWAT call-out
Feb 12th, 2025	TRV	Patrol Assist Search/Arrest Warrant SWAT call-out
Feb 12th, 2025	TAG SWAT Sprinter Van	Patrol Assist Search/Arrest Warrant SWAT call-out
Feb 14th, 2025	Avata 2	UAS - Patrol Assist
Feb 19th, 2025	Mavic 3 Thermal	UAS - Patrol Assist
Feb 20th, 2025	Mavic 3 Thermal	UAS - Patrol Assist

Feb 21st, 2025	Mavic 3 Thermal	UAS - Patrol Assist
Feb 22nd, 2025	Mavic 3 Thermal	UAS - Patrol Assist
Feb 22nd, 2025	Mavic 3 Thermal	UAS - Patrol Assist
Feb 23rd, 2025	Bearcat	Patrol Assist Search Warrant SWAT call-out
Feb 23rd, 2025	TRV	Patrol Assist Search Warrant SWAT call-out
Feb 23rd, 2025	TAG SWAT Sprinter Van	Patrol Assist Search Warrant SWAT call-out
Feb 26th, 2025	Mavic 3 Thermal	UAS - Patrol Assist
Feb 26th, 2025	Bearcat	Patrol Assist Search/Arrest Warrant SWAT call-out
Feb 26th, 2025	TRV	Patrol Assist Search/Arrest Warrant SWAT call-out
Feb 26th, 2025	TAG SWAT Sprinter Van	Patrol Assist Search/Arrest Warrant SWAT call-out
Mar 1st, 2025	Mavic 3 Thermal	UAS - Patrol Assist
Mar 2nd, 2025	Mavic 3 Thermal	UAS - Patrol Assist
Mar 2nd, 2025	Mavic 3 Thermal	UAS - Patrol Assist
Mar 3rd, 2025	Mavic 3 Thermal	UAS - Patrol Assist
Mar 3rd, 2025	Mavic 3 Thermal	UAS - Patrol Assist
Mar 3rd, 2025	Mavic 3 Thermal	UAS - Patrol Assist
Mar 4th, 2025	Mavic 3 Thermal	UAS - Patrol Assist

Mar 6th, 2025	Mavic 3 Thermal	UAS - Patrol Assist
Mar 6th, 2025	Mavic 3 Thermal	UAS - Patrol Assist
Mar 8th, 2025	Mavic 3 Thermal	UAS - Patrol Assist
Mar 9th, 2025	Mavic 3 Thermal	UAS - Patrol Assist
Mar 9th, 2025	Mavic 3 Thermal	UAS - Patrol Assist
Mar 9th, 2025	Mavic 3 Thermal	UAS - Patrol Assist
Mar 10th, 2025	Mavic 3 Thermal	UAS - Patrol Assist
Mar 11th, 2025	Mavic 3 Thermal	UAS - Patrol Assist
Mar 17th, 2025	Mavic 3 Thermal	UAS - Patrol Assist
Mar 18th, 2025	Mavic 3 Thermal	UAS - Patrol Assist
Mar 20th, 2025	Mavic 3 Thermal	UAS - Patrol Assist
Mar 26th, 2025	Mavic 3 Thermal	UAS - Patrol Assist
Mar 30th, 2025	Mavic 3 Thermal	UAS - Patrol Assist
Apr 1st, 2025	Mavic 3 Thermal	UAS - Patrol Assist
Apr 2nd, 2025	Bearcat	Patrol Assist Search/Arrest Warrant SWAT call-out
Apr 2nd, 2025	Bearcat	Patrol Assist Arrest Warrant SWAT call-out
Apr 6th, 2025	Mavic 3 Thermal	UAS - Patrol Assist

Apr 7th, 2025	Mavic 3 Thermal	UAS - Patrol Assist
Apr 8th, 2025	Mavic 3 Thermal	UAS - Patrol Assist
Apr 9th, 2025	Mavic 3 Thermal	UAS - Patrol Assist
Apr 11th, 2025	Mavic 3 Thermal	UAS - Patrol Assist
Apr 13th, 2025	Mavic 3 Thermal	UAS - Patrol Assist
Apr 15th, 2025	Mavic 3 Thermal	UAS - Patrol Assist
Apr 16th, 2025	Mavic 3 Thermal	UAS - Patrol Assist
Apr 17th, 2025	Mavic 3 Thermal	UAS - Patrol Assist
Apr 18th, 2025	Mavic 3 Thermal	UAS - Patrol Assist
Apr 20th, 2025	Mavic 3 Thermal	UAS - Patrol Assist
Apr 21st, 2025	TAG SWAT Sprinter Van	Patrol Assist Arrest Warrant SWAT call-out
Apr 23rd, 2025	Mavic 3 Thermal	UAS - Patrol Assist
Apr 23rd, 2025	Bearcat	Patrol Assist Arrest Warrant SWAT call-out
Apr 23rd, 2025	TRV	Patrol Assist Arrest Warrant SWAT call-out
Apr 23rd, 2025	TAG SWAT Sprinter Van	Patrol Assist Arrest Warrant SWAT call-out
Apr 23rd, 2025	40 MM CS Barricade 4330	Patrol Assist Arrest Warrant SWAT call-out

Apr 23rd, 2025	Mobile Command Post	Patrol Assist Arrest Warrant SWAT call-out
Apr 26th, 2025	Mavic 3 Thermal	UAS - Patrol Assist
Apr 30th, 2025	Mavic 3 Thermal	UAS - Patrol Assist
Apr 30th, 2025	Avata 2	UAS - Patrol Assist
May 1st, 2025	Mavic 3 Thermal	UAS - Patrol Assist
May 4th, 2025	Mavic 3 Thermal	UAS - Patrol Assist
May 9th, 2025	Mavic 3 Thermal	UAS - Patrol Assist
May 10th, 2025	Mavic 3 Thermal	UAS - Patrol Assist
May 11th, 2025	Mavic 3 Thermal	UAS - Patrol Assist
May 13th, 2025	Mavic 3 Thermal	UAS - Patrol Assist
May 13th, 2025	Mavic 3 Thermal	UAS - Patrol Assist
May 13th, 2025	Mavic 3 Thermal	UAS - Patrol Assist
May 13th, 2025	Mavic 3 Thermal	UAS - Patrol Assist
May 14th, 2025	Mavic 3 Thermal	UAS - Patrol Assist
May 14th, 2025	Mavic 3 Thermal	UAS - Patrol Assist
May 14th, 2025	Mavic 3 Thermal	UAS - Patrol Assist
May 14th, 2025	Mavic 3 Thermal	UAS - Patrol Assist

May 14th, 2025	Mavic 3 Thermal	UAS - Patrol Assist
May 16th, 2025	Mavic 3 Thermal	UAS - Patrol Assist
May 18th, 2025	Mavic 3 Thermal	UAS - Patrol Assist
May 19th, 2025	Mavic 3 Thermal	UAS - Patrol Assist
May 19th, 2025	Mavic 3 Thermal	UAS - Patrol Assist
May 19th, 2025	Mavic 3 Thermal	UAS - Patrol Assist
May 20th, 2025	Mavic 3 Thermal	UAS - Patrol Assist
May 20th, 2025	Avata 2	UAS - Patrol Assist
May 20th, 2025	Mavic 3 Thermal	UAS - Patrol Assist
May 20th, 2025	Mavic 3 Thermal	UAS - Patrol Assist
May 20th, 2025	Mavic 3 Thermal	UAS - Patrol Assist
May 20th, 2025	Bearcat	Patrol Assist Search/Arrest Warrant SWAT call-out
May 20th, 2025	TRV	Patrol Assist Search/Arrest Warrant SWAT call-out
May 20th, 2025	TAG SWAT Sprinter Van	Patrol Assist Search/Arrest Warrant SWAT call-out
May 20th, 2025	Flashbang	Patrol Assist Search/Arrest Warrant SWAT call-out
May 21st, 2025	Mavic 3 Thermal	UAS - Patrol Assist
May 21st, 2025	Mavic 3 Thermal	UAS - Patrol Assist

May 21st, 2025	Mavic 3 Thermal	UAS - Patrol Assist
May 21st, 2025	Mavic 3 Thermal	UAS - Patrol Assist
May 21st, 2025	Mavic 3 Thermal	UAS - Patrol Assist
May 21st, 2025	Bearcat	Patrol Assist Search/Arrest Warrant SWAT call-out
May 21st, 2025	TRV	Patrol Assist Search/Arrest Warrant SWAT call-out
May 21st, 2025	TAG SWAT Sprinter Van	Patrol Assist Search/Arrest Warrant SWAT call-out
May 21st, 2025	40 MM CS Barricade 4330	Patrol Assist Search/Arrest Warrant SWAT call-out
May 21st, 2025	Mobile Command Post	Patrol Assist Search/Arrest Warrant SWAT call-out
May 22nd, 2025	Mavic 3 Thermal	UAS - Patrol Assist
May 22nd, 2025	Mavic 3 Thermal	UAS - Patrol Assist
May 22nd, 2025	Mavic 3 Thermal	UAS - Patrol Assist
May 22nd, 2025	Mavic 3 Thermal	UAS - Patrol Assist
May 23rd, 2025	Mavic 3 Thermal	UAS - Patrol Assist
May 23rd, 2025	Mavic 3 Thermal	UAS - Patrol Assist
May 23rd, 2025	Mavic 3 Thermal	UAS - Patrol Assist
May 27th, 2025	Mavic 3 Thermal	UAS - Patrol Assist

May 28th, 2025	Mavic 3 Thermal	UAS - Patrol Assist
May 28th, 2025	Mavic 3 Thermal	UAS - Patrol Assist
May 28th, 2025	Mavic 3 Thermal	UAS - Patrol Assist
May 28th, 2025	Mavic 3 Thermal	UAS - Patrol Assist
May 28th, 2025	Mavic 3 Thermal	UAS - Patrol Assist
May 29th, 2025	Mavic 3 Thermal	UAS - Patrol Assist
May 29th, 2025	Mavic 3 Thermal	UAS - Patrol Assist
May 29th, 2025	Mavic 3 Thermal	UAS - Patrol Assist
May 29th, 2025	Mavic 3 Thermal	UAS - Patrol Assist
May 29th, 2025	Mavic 3 Thermal	UAS - Patrol Assist
May 29th, 2025	Mavic 3 Thermal	UAS - Patrol Assist
May 29th, 2025	Mavic 3 Thermal	UAS - Patrol Assist
May 30th, 2025	Mavic 3 Thermal	UAS - Patrol Assist
May 30th, 2025	Mavic 3 Thermal	UAS - Patrol Assist
May 30th, 2025	Mavic 3 Thermal	UAS - Patrol Assist
May 31st, 2025	Mavic 3 Thermal	UAS - Patrol Assist
May 31st, 2025	Mavic 3 Thermal	UAS - Patrol Assist
Jun 3rd, 2025	Mavic 3 Thermal	UAS - Patrol Assist

Jun 3rd, 2025	Avata 2	UAS - Patrol Assist
Jun 3rd, 2025	Bearcat	Patrol Assist Search/Arrest Warrant SWAT call-out
Jun 3rd, 2025	TAG SWAT Sprinter Van	Patrol Assist Search/Arrest Warrant SWAT call-out
Jun 4th, 2025	Mavic 3 Thermal	UAS - Patrol Assist
Jun 4th, 2025	Mavic 3 Thermal	UAS - Patrol Assist
Jun 4th, 2025	Mavic 3 Thermal	UAS - Patrol Assist
Jun 4th, 2025	Mavic 3 Thermal	UAS - Patrol Assist
Jun 4th, 2025	Mavic 3 Thermal	UAS - Patrol Assist
Jun 5th, 2025	Mavic 3 Thermal	UAS - Patrol Assist
Jun 5th, 2025	Mavic 3 Thermal	UAS - Patrol Assist
Jun 6th, 2025	Mavic 3 Thermal	UAS - Patrol Assist
Jun 7th, 2025	Mavic 3 Thermal	UAS - Patrol Assist
Jun 8th, 2025	Mavic 3 Thermal	UAS - Patrol Assist
Jun 10th, 2025	Mavic 3 Thermal	UAS - Patrol Assist
Jun 11th, 2025	Mavic 3 Thermal	UAS - Patrol Assist
Jun 12th, 2025	Mavic 3 Thermal	UAS - Patrol Assist
Jun 12th, 2025	Bearcat	Patrol Assist Arrest Warrant SWAT call-out

Jun 12th, 2025	TRV	Patrol Assist Arrest Warrant SWAT call-out
Jun 12th, 2025	TAG SWAT Sprinter Van	Patrol Assist Arrest Warrant SWAT call-out
Jun 12th, 2025	Flashbang	Patrol Assist Arrest Warrant SWAT call-out
Jun 12th, 2025	9 Bang Flashbang	Patrol Assist Arrest Warrant SWAT call-out
Jun 12th, 2025	CS Irritant Smoke	Patrol Assist Arrest Warrant SWAT call-out
Jun 12th, 2025	40MM Baton Extended	Patrol Assist Arrest Warrant SWAT call-out
Jun 12th, 2025	Robot	Patrol Assist Arrest Warrant SWAT call-out
Jun 15th, 2025	Mavic 3 Thermal	UAS - Patrol Assist
Jun 16th, 2025	Mavic 3 Thermal	UAS - Patrol Assist
Jun 17th, 2025	Mavic 3 Thermal	UAS - Patrol Assist
Jun 20th, 2025	Avata 2	UAS - Patrol Assist
Jun 22nd, 2025	Mavic 3 Thermal	UAS - Patrol Assist
Jun 22nd, 2025	Mavic 3 Thermal	UAS - Patrol Assist
Jun 22nd, 2025	Mavic 3 Thermal	UAS - Patrol Assist
Jun 22nd, 2025	Avata 2	UAS - Patrol Assist
Jun 24th, 2025	Mavic 3 Thermal	UAS - Patrol Assist
Jun 25th, 2025	Mavic 3 Thermal	UAS - Patrol Assist

Jun 26th, 2025	Mavic 3 Thermal	UAS - Patrol Assist
Jun 30th, 2025	Mavic 3 Thermal	UAS - Patrol Assist
Jul 2nd, 2025	Mavic 3 Thermal	UAS - Patrol Assist
Jul 4th, 2025	Mobile Command Post	Traffic Control 4th of July Fireworks
Jul 9th, 2025	Mavic 3 Thermal	UAS - Patrol Assist
Jul 10th, 2025	Mavic 3 Thermal	UAS - Patrol Assist
Jul 12th, 2025	Mavic 3 Thermal	UAS - Patrol Assist
Jul 13th, 2025	Mavic 3 Thermal	UAS - Patrol Assist
Jul 15th, 2025	Mavic 3 Thermal	UAS - Patrol Assist
Jul 15th, 2025	Mavic 3 Thermal	UAS - Patrol Assist
Jul 15th, 2025	Mavic 3 Thermal	UAS - Patrol Assist
Jul 15th, 2025	Mavic 3 Thermal	UAS - Patrol Assist
Jul 15th, 2025	Mavic 3 Thermal	UAS - Patrol Assist
Jul 15th, 2025	Mavic 3 Thermal	UAS - Patrol Assist
Jul 15th, 2025	Mavic 3 Thermal	UAS - Patrol Assist
Jul 15th, 2025	Mavic 3 Thermal	UAS - Patrol Assist
Jul 16th, 2025	ICOR Robot	Patrol Assist suspicious package

Jul 18th, 2025	Mavic 3 Thermal	UAS - Patrol Assist
Jul 18th, 2025	Avata 2	UAS - Patrol Assist
Jul 18th, 2025	Mobile Command Post	DUI Enforcement OTS
Jul 19th, 2025	Mavic 3 Thermal	UAS - Patrol Assist
Jul 20th, 2025	Mavic 3 Thermal	UAS - Patrol Assist
Jul 21st, 2025	Mavic 3 Thermal	UAS - Patrol Assist
Jul 21st, 2025	Mavic 3 Thermal	UAS - Patrol Assist
Jul 21st, 2025	Mavic 3 Thermal	UAS - Patrol Assist
Jul 21st, 2025	Mavic 3 Thermal	UAS - Patrol Assist
Jul 21st, 2025	Mavic 3 Thermal	UAS - Patrol Assist
Jul 21st, 2025	Mavic 3 Thermal	UAS - Patrol Assist
Jul 21st, 2025	Mavic 3 Thermal	UAS - Patrol Assist
Jul 21st, 2025	Mavic 3 Thermal	UAS - Patrol Assist
Jul 21st, 2025	Mavic 3 Thermal	UAS - Patrol Assist
Jul 21st, 2025	Mavic 3 Thermal	UAS - Patrol Assist
Jul 21st, 2025	Mavic 3 Thermal	UAS - Patrol Assist
Jul 22nd, 2025	Mavic 3 Thermal	UAS - Patrol Assist
Jul 23rd, 2025	Avata 2	UAS - Patrol Assist
Jul 27th, 2025	Mavic 3 Thermal	UAS - Patrol Assist

Jul 28th, 2025	Mavic 3 Thermal	UAS - Patrol Assist
Jul 30th, 2025	Mavic 3 Thermal	UAS - Patrol Assist
Jul 31st, 2025	Mavic 3 Thermal	UAS - Patrol Assist
Jul 31st, 2025	Mavic 3 Thermal	UAS - Patrol Assist
Aug 1st, 2025	Mavic 3 Thermal	UAS - Patrol Assist
Aug 4th, 2025	Mavic 3 Thermal	UAS - Patrol Assist
Aug 7th, 2025	Mavic 3 Thermal	UAS - Patrol Assist
Aug 10th, 2025	Mavic 3 Thermal	UAS - Patrol Assist
Aug 11th, 2025	Mavic 3 Thermal	UAS - Patrol Assist
Aug 12th, 2025	Avata 2	UAS - Patrol Assist
Aug 17th, 2025	Mavic 3 Thermal	UAS - Patrol Assist
Aug 18th, 2025	Mavic 3 Thermal	UAS - Patrol Assist
Aug 19th, 2025	Mavic 3 Thermal	UAS - Patrol Assist
Aug 20th, 2025	Avata 2	UAS - Patrol Assist
Aug 21st, 2025	Mavic 3 Thermal	UAS - Patrol Assist
Aug 24th, 2025	Avata 2	UAS - Patrol Assist
Aug 27th, 2025	Bearcat	Dignitary Protection Detail

Aug 29th, 2025	Mobile Command Post	DUI Enforcement OTS
Sep 9th, 2025	Mavic 3 Thermal	UAS - Patrol Assist
Sep 13th, 2025	Mavic 3 Thermal	UAS - Patrol Assist
Sep 14th, 2025	Mavic 3 Thermal	UAS - Patrol Assist
Sep 16th, 2025	Bearcat	Patrol Assist Search/Arrest Warrant SWAT call-out
Sep 16th, 2025	TRV	Patrol Assist Search/Arrest Warrant SWAT call-out
Sep 16th, 2025	TAG SWAT Sprinter Van	Patrol Assist Search/Arrest Warrant SWAT call-out
Sep 16th, 2025	Bearcat	Patrol Assist Search/Arrest Warrant SWAT call-out
Sep 16th, 2025	TRV	Patrol Assist Search/Arrest Warrant SWAT call-out
Sep 16th, 2025	TAG SWAT Sprinter Van	Patrol Assist Search/Arrest Warrant SWAT call-out
Sep 19th, 2025	Mavic 3 Thermal	UAS - Patrol Assist
Sep 20th, 2025	Mavic 3 Thermal	UAS - Patrol Assist
Sep 20th, 2025	Mavic 3 Thermal	UAS - Patrol Assist
Sep 20th, 2025	Mavic 3 Thermal	UAS - Patrol Assist
Sep 22nd, 2025	Mavic 3 Thermal	UAS - Patrol Assist
Sep 24th, 2025	Mavic 3 Thermal	UAS - Patrol Assist
Sep 25th, 2025	Mavic 3 Thermal	UAS - Patrol Assist

Sep 27th, 2025	Mavic 3 Thermal	UAS - Patrol Assist
Sep 28th, 2025	Mavic 3 Thermal	UAS - Patrol Assist
Sep 28th, 2025	Mavic 3 Thermal	UAS - Patrol Assist
Sep 28th, 2025	Mavic 3 Thermal	UAS - Patrol Assist
Sep 29th, 2025	Mavic 3 Thermal	UAS - Patrol Assist
Sep 30th, 2025	Mobile Command Post	CalAPCO Display
Oct 12th, 2025	Mavic 3 Thermal	UAS - Patrol Assist
Oct 16th, 2025	Bearcat	Patrol Assist Search Warrant SWAT call-out
Oct 16th, 2025	TRV	Patrol Assist Search Warrant SWAT call-out
Oct 16th, 2025	TAG SWAT Sprinter Van	Patrol Assist Search Warrant SWAT call-out
Oct 16th, 2025	Flashbang	Patrol Assist Search Warrant SWAT call-out
Oct 16th, 2025	40 MM Baton Extended	Patrol Assist Search Warrant SWAT call-out
Nov 5th, 2025	Mavic 3 Thermal	UAS - Patrol Assist
Nov 5th, 2025	Bearcat	Patrol Assist SWAT call-out for 459 PC Suspect
Nov 5th, 2025	TRV	Patrol Assist SWAT call-out for 459 PC Suspect
Nov 5th, 2025	TAG SWAT Sprinter Van	Patrol Assist SWAT call-out for 459 PC Suspect
Nov 6th, 2025	Mavic 3 Thermal	UAS - Patrol Assist

Nov 10th, 2025	Mavic 3 Thermal	UAS - Patrol Assist
Nov 11th, 2025	Avata 2	UAS - Patrol Assist
Nov 11th, 2025	Avata 2	UAS - Patrol Assist
Nov 11th, 2025	Bearcat	Patrol Assist Search/Arrest Warrant SWAT call-out
Nov 11th, 2025	TRV	Patrol Assist Search/Arrest Warrant SWAT call-out
Nov 11th, 2025	TAG SWAT Sprinter Van	Patrol Assist Search/Arrest Warrant SWAT call-out
Nov 11th, 2025	Flashbang	Patrol Assist Search/Arrest Warrant SWAT call-out
Nov 14th, 2025	Bearcat	Patrol Assist Search Warrant SWAT call-out
Nov 14th, 2025	TRV	Patrol Assist Search Warrant SWAT call-out
Nov 14th, 2025	TAG SWAT Sprinter Van	Patrol Assist Search Warrant SWAT call-out
Nov 14th, 2025	Bearcat	Patrol Assist Search Warrant SWAT call-out
Nov 14th, 2025	TRV	Patrol Assist Search Warrant SWAT call-out
Nov 14th, 2025	TAG SWAT Sprinter Van	Patrol Assist Search Warrant SWAT call-out
Nov 14th, 2025	Flashbang	Patrol Assist Search Warrant SWAT call-out
Nov 16th, 2025	Mavic 3 Thermal	UAS - Patrol Assist
Nov 25th, 2025	Mavic 3 Thermal	UAS - Patrol Assist
Nov 25th, 2025	Mavic 3 Thermal	UAS - Patrol Assist

Nov 28th, 2025	Mavic 3 Thermal	UAS - Patrol Assist
Nov 29th, 2025	Mavic 3 Thermal	UAS - Patrol Assist
Nov 29th, 2025	Mavic 3 Thermal	UAS - Patrol Assist
Nov 30th, 2025	Mavic 3 Thermal	UAS - Patrol Assist
Nov 30th, 2025	Mavic 3 Thermal	UAS - Patrol Assist
Nov 30th, 2025	Mavic 3 Thermal	UAS - Patrol Assist
Nov 30th, 2025	Avata 2	UAS - Patrol Assist
Dec 4th, 2025	Avata 2	UAS - Patrol Assist
Dec 5th, 2025	Mobile Command Post	Operation Grinch Holiday Enforcement
Dec 7th, 2025	Mavic 3 Thermal	UAS - Patrol Assist
Dec 7th, 2025	Mavic 3 Thermal	UAS - Patrol Assist
Dec 10th, 2025	Mavic 3 Thermal	UAS - Patrol Assist
Dec 12th, 2025	Mavic 3 Thermal	UAS - Patrol Assist
Dec 22nd, 2025	Mobile Command Post	Homicide Investigation

DESCRIPTION (Military item)	QUANTITY (sought or possessed)	CAPABILITIES	EXPECTED LIFESPAN	PRODUCT DESCRIPTION (MANUFACTURER)	PURPOSE (AUTHORIZED USE)	FISCAL IMPACT (INITIAL AND YEARLY COST)	LEGAL RULES	TRAINING (CA POST OR OTHER)	COMPLIANCE (OVERSIGHT)	COMPLAINT PROCEDURE
TRV	1	Armored Transportation	Less than 20 years	LENCO Armored Vehicles	Transportation and Ballistic Protection	Initial: $383,692 Yearly: $1K	835a PC & Federal and State case precedent	CA POST Basic SWAT School	After Action Review, UOF Admin review, Internal Affairs Investigation - 1009	Roseville Policy 1009
Bearcat	1	Armored Transportation	Less than 20 years	LENCO Armored Vehicles	Transportation and Ballistic Protection	Initial: $369,911 Yearly: $1K	835a PC & Federal and State case precedent	CA POST Basic SWAT School	After Action Review, UOF Admin review, Internal Affairs Investigation - 1009	Roseville Policy 1009
TAG SWAT Sprinter Van	1	Armored Transportation	Less than 20 years	TAG	Transportation and Ballistic Protection	Initial: $210,000 Yearly: $1K	835a PC & Federal and State case precedent	CA POST Basic SWAT School	After Action Review, UOF Admin review, Internal Affairs Investigation - 1009	Roseville Policy 1009
Mobile Command Post	1	Mobile field command and control center for critical incidents	Less than 20 years	LDV Vehicles: Command Vehicle	Critical investigative and public safety incidents for mobile technology ICS functions	Subtotal with Tax: $490,177.38 Yearly: $300	835a PC & Federal and State case precedent	In house orientation and IT support	N/A	Roseville Policy 1009
Rifles (SWAT Issued M4's)	20	Lethal Force	15,000 Rounds	Colt Arms	Lethal Force	Initial: $2k each Yearly: $200	835a PC & Federal and State case precedent	CA POST Basic SWAT School	After Action Review, UOF Admin review, Internal Affairs Investigation - Policy 1009	Roseville Policy 1009
Shotguns (SWAT Issued)	1 Less Lethal (Orange), 1 Breaching	Less than Lethal/Lethal Force	30,000 Rounds	Remington 870	Less Lethal Force Compliance/Entry Breaching/Lethal Force	Initial: $400. Yearly: $0.00	835a PC & Federal and State case precedent	CA POST Basic SWAT Breaching School/ CA POST Certified Extended Range	After Action Review, UOF Admin review, Internal Affairs Investigation - Policy 1009	Roseville Policy 1009

								Projectile Munitions (4hrs)		
40 MM	2	Less than Lethal Force	10,000 Rounds	LMT	Less Lethal Force Compliance	Initial: $1000 each Yearly: $0.00	835a PC & Federal and State case precedent	CA POST Certified Extended Range Projectile Munitions (4hrs)	After Action Review, UOF Admin review, Internal Affairs Investigation - Policy 1009	Roseville Policy 1009
40 MM Baton Round	52	Less than Lethal Force	10 years	Defense Technologies	Less Lethal Force Compliance	Initial: $20 ea. Yearly: $500 max depending on dispersion.	835a PC & Federal and State case precedent	CA POST Certified Extended Range Projectile Munitions (4hrs)	After Action Review, UOF Admin review, Internal Affairs Investigation - Policy 1009	Roseville Policy 1009
40 MM Baton Extended	73	Less than Lethal Force	10 years	Defense Technologies	Less Lethal Force Compliance	Initial: $20 ea. Yearly: $500.	835a PC & Federal and State case precedent	CA POST Certified Extended Range Projectile Munitions (4hrs)	After Action Review, UOF Admin review, Internal Affairs Investigation - Policy 1009	Roseville Policy 1009
40 MM OC Round	15	Less than Lethal Force	5 years	Defense Technologies	Less Lethal Force Compliance	Initial: $20 ea. Yearly: $100.	835a PC & Federal and State case precedent	CA POST Certified Extended Range Projectile Munitions (4hrs)	After Action Review, UOF Admin review, Internal Affairs Investigation - Policy 1009	Roseville Policy 1009
40 MM CS Barricade 4330	59	Less than Lethal Force	5 years	CTS Combined Tactical Solution's	Less Lethal Force Compliance	Initial: $22 ea. Yearly: $100.	835a PC & Federal and State case precedent	CA POST Basic SWAT Gas School	After Action Review, UOF Admin review, Internal Affairs Investigation - Policy 1009	Roseville Policy 1009
Blank Shell Gas	25	Propel Chemical Agents	10 years	CTS Combined Tactical Solution's	Used to propel chemical agents from Gas Launcher Cup	Initial: $50 Yearly: Dispersion dependent	835a PC & Federal and State case precedent	CA POST Basic SWAT Gas School	After Action Review, UOF Admin review, Internal Affairs Investigation - Policy 1009	Roseville Policy 1009
Shotgun Bean Bag Round	6	Less than Lethal Force	10 years	Defense Technologies	Less Lethal Force Compliance	Initial: $5. each Yearly: $0.00	835a PC & Federal and State	CA POST Certified Extended Range	After Action Review, UOF Admin review, Internal Affairs	Roseville Policy 1009

						Dispersion dependent	case precedent	Projectile Munitions (4hrs)	Investigation - Policy 1009	
Gas Launcher Cup Attachment	3	Launch Chemical Agents	Unknown	CTS Combined Tactical Solution's	Used to propel chemical agents from Gas Launcher Cup	Initial: $260 ea. Yearly: $0.00	835a PC & Federal and State case precedent	CA POST Basic SWAT Gas School	After Action Review, UOF Admin review, Internal Affairs Investigation - Policy 1009	Roseville Policy 1009
Gas Spike	1	Introducing Chemical Agents	Unknown	Tomahawk Tactical	Introducing Chemical Agents into structure remotely	Initial: $4K Yearly: $0	835a PC & Federal and State case precedent	CA POST Basic SWAT Gas School	After Action Review, UOF Admin review, Internal Affairs Investigation - Policy 1009	Roseville Policy 1009
Flashbang	9	Less than Lethal Force	5 years	Defense Technology	Light Sound Diversionary Device	Initial: Yearly: Rocklin PD assumed cost	835a PC & Federal and State case precedent	CA POST Basic SWAT School	After Action Review, UOF Admin review, Internal Affairs Investigation - Policy 1009	Roseville Policy 1009
9 Bang Flashbang	0	Less than Lethal Force	5 years	Defense Technology	Light Sound Diversionary Device	Initial: Yearly: Rocklin PD assumed cost	835a PC & Federal and State case precedent	CA POST Basic SWAT School	After Action Review, UOF Admin review, Internal Affairs Investigation - Policy 1009	Roseville Policy 1009
Bang Pole	1	Introduce LSDD's	Unknown	Thunderstick American Tactical Entry Accessories MFG	Introducing LSDD's into specific area remotely	Initial: $500 Yearly: $0	835a PC & Federal and State case precedent	CA POST Basic SWAT School	After Action Review, UOF Admin review, Internal Affairs Investigation - Policy 1009	Roseville Policy 1009
MP5-SD	1	Lethal Force	15,000 Rounds	Heckler Koch (HK)	Lethal Force	Initial: $1,200 Yearly: $0	835a PC & Federal and State case precedent	CA POST Basic SWAT School	After Action Review, UOF Admin review, Internal Affairs Investigation - Policy 1009	Roseville Policy 1009
Jet Smoke 5210 JL	13	Less than Lethal Force	5 years	CTS Combined Tactical Solution's	Less Lethal Force Compliance	Initial: $34 ea Yearly: $0 Dispersion dependent	835a PC & Federal and State case precedent	CA POST Basic SWAT Gas School	After Action Review, UOF Admin review, Internal Affairs Investigation - Policy 1009	Roseville Policy 1009

Baffled Smoke 5210	5	Less than Lethal Force	5 years	CTS Combined Tactical Solution's	Less Lethal Force Compliance	Initial: $35 ea Yearly: $0 Dispersion dependent	835a PC & Federal and State case precedent	CA POST Basic SWAT Gas School	After Action Review, UOF Admin review, Internal Affairs Investigation - Policy 1009	Roseville Policy 1009
Baffled CS 5230	25	Less than Lethal Force	5 years	CTS Combined Tactical Solution's	Less Lethal Force Compliance	Initial: $28 ea Yearly: $0 Dispersion dependent	835a PC & Federal and State case precedent	CA POST Basic SWAT Gas School	After Action Review, UOF Admin review, Internal Affairs Investigation - Policy 1009	Roseville Policy 1009
Unbaffled CS 5230	15	Less than Lethal Force	5 years	CTS Combined Tactical Solution's	Less Lethal Force Compliance	Initial: $28 ea Yearly: $0 Dispersion dependent	835a PC & Federal and State case precedent	CA POST Basic SWAT Gas School	After Action Review, UOF Admin review, Internal Affairs Investigation - Policy 1009	Roseville Policy 1009
Aerosol OC CS 6343	17	Less than Lethal Force	5 years	CTS Combined Tactical Solution's	Less Lethal Force Compliance	Initial: $36 ea Yearly: $0 Dispersion dependent	835a PC & Federal and State case precedent	CA POST Basic SWAT Gas School	After Action Review, UOF Admin review, Internal Affairs Investigation - Policy 1009	Roseville Policy 1009
TRI Chambers	7	Less than Lethal Force	5 years	DEF Tech	Less Lethal Force Compliance	Initial: Rocklin assumed cost Yearly: Dispersion dependent	835a PC & Federal and State case precedent	CA POST Basic SWAT Gas School	After Action Review, UOF Admin review, Internal Affairs Investigation - Policy 1009	Roseville Policy 1009
CS 8230 Tactical Grenade Smoke	7	Less than Lethal Force	5 years	CTS Combined Tactical Solution's	Less Lethal Force Compliance	Initial: Rocklin assumed cost Yearly: Dispersion dependent	835a PC & Federal and State case precedent	CA POST Basic SWAT Gas School	After Action Review, UOF Admin review, Internal Affairs Investigation - Policy 1009	Roseville Policy 1009
Muzzle Bangs	50	Less than Lethal Force	10 years	CTS Combined Tactical Solution's	Light Sound Diversionary Device	Initial: $7 ea Yearly: Dispersion dependent	835a PC & Federal and State case precedent	CA POST Basic SWAT School	After Action Review, UOF Admin review, Internal Affairs Investigation - Policy 1009	Roseville Policy 1009
Breaching Shells	27 Black Caps, 32 Green Caps	Breaching Barricaded Entry/Lethal Force	10 years	Royal Arms	Bolt/Hinge Removal for entry into structures	Initial:$20 ea. box Yearly: Dispersion dependent	835a PC & Federal and State case precedent	CA POST Basic SWAT Breaching School	After Action Review, UOF Admin review, Internal Affairs	Roseville Policy 1009

									Investigation - Policy 1009	
4210 40 MM White SMOKE	2	Less than Lethal Force	5 years	CTS Combined Tactical Solution's	Less Lethal Force Compliance	Initial:$50 Yearly: Dispersion dependent	835a PC & Federal and State case precedent	CA POST Basic SWAT Gas School	After Action Review, UOF Admin review, Internal Affairs Investigation - Policy 1009	Roseville Policy 1009
CS Irritant Smoke	4	Less than Lethal Force	5 years	Sage Control Ordinance	Less Lethal Force Compliance	Initial: $50 Yearly: Dispersion dependent	835a PC & Federal and State case precedent	CA POST Basic SWAT Gas School	After Action Review, UOF Admin review, Internal Affairs Investigation - Policy 1009	Roseville Policy 1009
Sniper Rifles	4	Lethal Force	10,000 Rounds	Kimber 308	Lethal Force/Over Watch	Initial:$3K ea. Yearly: $100	835a PC & Federal and State case precedent	CA POST Basic SWAT Sniper School	After Action Review, UOF Admin review, Internal Affairs Investigation - Policy 1009	Roseville Policy 1009
Inline Night Vision (Sniper)	2	Night Vision	Unknown	Knight Force	Rifle Mounted Night Vision	Initial: $5K Yearly: $0 Grant funded OES	835a PC & Federal and State case precedent	CA POST Basic SWAT Sniper School	After Action Review, UOF Admin review, Internal Affairs Investigation - Policy 1009	Roseville Policy 1009
Infrared Laser Light	12	Night Vision Illuminator	Unknown	Steiner	Rifle Mounted Night Vision	Initial: $5K Yearly: $0 Grant funded OES	835a PC & Federal and State case precedent	CA POST Basic SWAT Sniper School	After Action Review, UOF Admin review, Internal Affairs Investigation - Policy 1009	Roseville Policy 1009
Night Vision Goggles w/Weapon Mounted	8	Night Vision	Unknown	PVS-14 Gen III WP	Helmet Mounted Night Vision	Initial: 5K ea. Yearly: $0 Grant funded OES	835a PC & Federal and State case precedent	CA POST Basic SWAT School	After Action Review, UOF Admin review, Internal Affairs Investigation - Policy 1009	Roseville Policy 1009
Rifle Mounted Monocular	2	Night Vision	Unknown	SIMRAD Optronics	Rifle Mounted Night Vision	Initial: $5K Yearly: 0$ Grant funded OES	835a PC & Federal and State case precedent	CA POST Basic SWAT School	After Action Review, UOF Admin review, Internal Affairs Investigation - Policy 1009	Roseville Policy 1009
Night Vision Monocular	1	Night Vision	Unknown	NAIT	Handheld Night Vision	Initial:$2K	835a PC & Federal and State	CA POST Basic SWAT School	After Action Review, UOF Admin review,	Roseville Policy 1009

						Yearly: $0 Grant funded OES	case precedent		Internal Affairs Investigation - Policy 1009	
Red Dot Sight Apertures	16	Sight Alignment	10 years	EO Tech	Illuminated Sight Alignment	Initial:$300 Yearly:$0	835a PC & Federal and State case precedent	CA POST Basic SWAT School	After Action Review, UOF Admin review, Internal Affairs Investigation - Policy 1009	Roseville Policy 1009
Night Vision Goggles	1	Night Vision	Unknown	Armasight NVG	Head Mounted Night Vision	Initial:$2K Yearly:$0	835a PC & Federal and State case precedent	CA POST Basic SWAT School	After Action Review, UOF Admin review, Internal Affairs Investigation - Policy 1009	Roseville Policy 1009
Pole Camera	1	Video Images from Remote Location	Unknown	CORE Tactical Electronics	Real Time Video Display from under closed door or unreachable location	Initial: $700 Yearly: $0	835a PC & Federal and State case precedent	CA POST Basic SWAT School	After Action Review, UOF Admin review, Internal Affairs Investigation - Policy 1009	Roseville Policy 1009
Robot (Throwbot)	1	Video Images from Remote Location	4-5 years	RECON Robotics	Remote Control Maneuverability with Real Time Video Display	Initial: $6,000 Yearly: $0	835a PC & Federal and State case precedent	CA POST Basic SWAT School	After Action Review, UOF Admin review, Internal Affairs Investigation - Policy 1009	Roseville Policy 1009
Robot (Tracked and wheeled)	3	Video Images from Remote Location	4-5 years	SuperDroid	Remote Control Maneuverability with Real Time Video Display	Initial: $15,000 Yearly: $0	835a PC & Federal and State case precedent	CA POST Basic SWAT School	After Action Review, UOF Admin review, Internal Affairs Investigation - Policy 1009	Roseville Policy 1009
Magnifiers	15	Magnification of Sight Aperture	10 years	EO Tech	Sight Magnification	Initial: $400 Yearly: $0	835a PC & Federal and State case precedent	CA POST Basic SWAT School	After Action Review, UOF Admin review, Internal Affairs Investigation - Policy 1009	Roseville Policy 1009
Magnifiers (Snipers)	4	Magnification of Sight Aperture	10 Years	Sig Sauer Tango MSR LPVO	Sight Magnification	Initial:$400 Yearly:$0	835a PC & Federal and State case precedent	CA POST Basic SWAT School	After Action Review, UOF Admin review, Internal Affairs Investigation - Policy 1009	Roseville Policy 1009

Suppressors (Snipers)	4	Noise Suppression	10,000 Rounds	SureFire	Noise Suppression	Initial:$975 Yearly:$0	835a PC & Federal and State case precedent	CA POST Basic SWAT School	After Action Review, UOF Admin review, Internal Affairs Investigation - Policy 1009	Roseville Policy 1009
Suppressors (Entry)	16	Noise Suppression	10,000 Rounds	HUXWRK	Noise Suppression	Initial: $975 Yearly: $0	835a PC & Federal and State case precedent	CA POST Basic SWAT School	After Action Review, UOF Admin review, Internal Affairs Investigation - Policy 1009	Roseville Policy 1009
Patrol Red Dot Optics	130	Rifle Sight. Non magnified	10 years	Aimpoint	Rifle Sight	$30 year/ batteries	835a PC & Federal and State case precedent	1 hour for Zero.	After Action Review, UOF Admin review, Internal Affairs Investigation - Policy 1009	Roseville Policy 1009
Pepperball Launcher	8	Less Lethal force option	10 years	Pepperball Inc	Less Lethal force option	Initial: entire system $700 No annual fee.	835a PC & Federal and State case precedent	1 hour In-House Trng	After Action Review, UOF Admin review, Internal Affairs Investigation - Policy 1009	Roseville Policy 1009
Pepperball Munitions	1000	Less Lethal force option	10 years	Pepperball Inc	Less Lethal force option	$1000 year for inert rounds.	835a PC & Federal and State case precedent	1 hours In-House Trng	After Action Review, UOF Admin review, Internal Affairs Investigation - Policy 1009	Roseville Policy 1009
40mm Launcher	45 (+2 more in SWAT)	Less Lethal force	20 years	LMT	Less Lethal force	$1000 year/ training rounds	835a PC & Federal and State case precedent	(4) hour POST Certified course	After Action Review, UOF Admin review, Internal Affairs Investigation - Policy 1009	Roseville Policy 1009
40mm Multi-Launcher	3	Less Lethal force	20 years	Milox	Less Lethal force	Initial $3600/ training rounds	835a PC & Federal and State case precedent	(4) hour POST Certified course	After Action Review, UOF Admin review, Internal Affairs Investigation - Policy 1009	Roseville Policy 1009
40mm munition	300	Less Lethal Blue Sponge Round munition	5 years	Def Tech	Less Lethal force	$0-$1500 year	835a PC & Federal and State case precedent	(4)hours POST Certified Course	After Action Review, UOF Admin review, Internal Affairs	Roseville Policy 1009

									Investigation - Policy 1009	
40mm munition	50	Less Lethal Orange OC munition	5 years	Def Tech	Less Lethal force	$0-$1000 per year.	835a PC & Federal and State case precedent	(4)hour POST Certified course	After Action Review, UOF Admin review, Internal Affairs Investigation - Policy 1009	Roseville Policy 1009
Bean Bag Launcher	65	Less Lethal force	30 years	Remington	Less Lethal force	$0 annually. Being phased out.	835a PC & Federal and State case precedent	(4)hour POST Certified Course	Being Phased out of dept use.	Roseville Policy 1009
Bean Bag Munitions	400	Less Lethal force munition	10 years	Def Tech	Less Lethal force	$0 annually. Being phased out.	835a PC & Federal and State case precedent	(4)hours POST course	Being Phased out of dept use.	Roseville Policy 1009
Kinetic Breaching Tool	1	Breaching Barricaded Entry	10 years	Kinetic Breaching	Forced Entry Tool	Initial: $0 Yearly: Dispersion dependent	835a PC & Federal and State case precedent	CA POST Basic SWAT Breaching School	After Action Review, UOF Admin review, Internal Affairs Investigation - Policy 1009	Roseville Policy 1009
UAS SECTION										
DJI Mavic 3T	4	UAS-Remote Piloted	2-5 years	DJI	See attached RPD Policy	7300 initial / 400-600 per year battery maintenance	FAA Requirements and Regulations.	FAA Part 107, RPD monthly training/skills	Sergeant and Lt oversight of the team	Professional Standards Unit Roseville Policy 1009
DJI Matrice 4TD	2	UAS – Remote Piloted	2-5 years	DJI	See attached RPD Policy	9850 initial / 1000-1500 per year battery maintenance	FAA Requirements and Regulations.	FAA Part 107, RPD monthly training/skills	Sergeant and Lt oversight of the team	Professional Standards Unit Roseville Policy 1009
DJI Avata 2	4	UAS – Remote Piloted	2-5 years	DJI	See attached RPD Policy	1350 initial / 200-300 per year battery maintenance	FAA Requirements and Regulations.	FAA Part 107, RPD monthly training/skills	Sergeant and Lt oversight of the team	Professional Standards Unit Roseville Policy 1009
PAN Disruptor	4	General disruption tool	At end of lifespan	Ideal Explosives/Carbon Fire	See attached RPD Policy	$5000 per unit/ No annual cost	FBI Requirements and Regulations	FBI Hazardous Devices School	After Action Review, UOF Admin review, Internal Affairs Investigation - Policy 1009	Roseville Policy 1009

PAN Rounds	96 Rounds	General disruption tool	Consumable	Carbon Fire	See attached RPD Policy	Part of a $5500 annual consumable budget	FBI Requirements and Regulations	FBI Hazardous Devices School	After Action Review, UOF Admin review, Internal Affairs Investigation - Policy 1009	Roseville Policy 1009
High Explosives	130 LBS	Used in general disruption tools, render safe, and counter charging	Consumable	Alpha Explosives	See attached RPD Policy	Part of a $5500 annual consumable budget	FBI Requirements and Regulations	FBI Hazardous Devices School	After Action Review, UOF Admin review, Internal Affairs Investigation - Policy 1009	Roseville Policy 1009
ICOR Robot	1	Remote piloted	At end of lifespan	ICOR	See attached RPD Policy	$75000/ Part of a $1500 annual maintenance budget	FBI Requirements and Regulations	FBI Hazardous Devices School	After Action Review, UOF Admin review, Internal Affairs Investigation - Policy 1009	Roseville Policy 1009
Remotec Robot	1	Remote piloted	At end of lifespan	ANDROS	See attached RPD Policy	10-33 program/ Part of a $1500 annual maintenance budget	FBI Requirements and Regulations	FBI Hazardous Devices School	After Action Review, UOF Admin review, Internal Affairs Investigation - Policy 1009	Roseville Policy 1009
Allen Vanguard Robot	1	Remote piloted	At end of lifespan	54 KG	See attached RPD Policy	$125000/ Part of a $1500 annual maintenance budget	FBI Requirements and Regulations	FBI Hazardous Devices School	After Action Review, UOF Admin review, Internal Affairs Investigation - Policy 1009	Roseville Policy 1009

Military Equipment

706.1 PURPOSE AND SCOPE

The purpose of this policy is to provide guidelines for the approval, acquisition, use, collaborating in the use, and reporting requirements of military equipment (Government Code § 7070; Government Code § 7071; Government Code § 7072).

706.1.1 DEFINITIONS

Definitions related to this policy include (Government Code § 7070):

Governing body – The elected or appointed body that oversees the Roseville Police Department.

Military equipment – Includes but is not limited to the following:

- Unmanned, remotely piloted, powered aerial or ground vehicles.
- Mine-resistant ambush-protected (MRAP) vehicles or armored personnel carriers.
- High mobility multipurpose wheeled vehicles (HMMWV), two-and-one-half-ton trucks, five-ton trucks, or wheeled vehicles that have a breaching or entry apparatus attached.
- Tracked armored vehicles that provide ballistic protection to their occupants.
- Command and control vehicles that are either built or modified to facilitate the operational control and direction of public safety units.
- Weaponized aircraft, vessels, or vehicles of any kind.
- Battering rams, slugs, and breaching apparatuses that are explosive in nature. This does not include a handheld, one-person ram.
- Firearms and ammunition of .50 caliber or greater, excluding standard-issue shotguns and standard-issue shotgun ammunition.
- Specialized firearms and ammunition of less than .50 caliber, including firearms and accessories identified as assault weapons in Penal Code § 30510 and Penal Code § 30515, with the exception of standard-issue firearms and standard-issue ammunition.
- Any firearm or firearm accessory that is designed to launch explosive projectiles.
- Noise-flash diversionary devices and explosive breaching tools.
- Munitions containing tear gas or OC, excluding standard, service-issued handheld pepper spray.
- TASER® Shockwave, microwave weapons, water cannons, and long-range acoustic devices (LRADs).
- Kinetic energy weapons and munitions.
- Any other equipment as determined by a governing body or a state agency to require additional oversight.

Copyright Lexipol, LLC 2025/02/07, All Rights Reserved.
Published with permission by Roseville Police Department

706.2 POLICY

It is the policy of the Roseville Police Department that members of this department comply with the provisions of Government Code § 7071 with respect to military equipment.

706.3 MILITARY EQUIPMENT COORDINATOR

The Chief of Police should designate a member of this department to act as the military equipment coordinator. The responsibilities of the military equipment coordinator include but are not limited to:

(a) Acting as liaison to the governing body for matters related to the requirements of this policy.

(b) Identifying department equipment that qualifies as military equipment in the current possession of the Department, or the equipment the Department intends to acquire that requires approval by the governing body.

(c) Conducting an inventory of all military equipment at least annually.

(d) Collaborating with any allied agency that may use military equipment within the jurisdiction of the Roseville Police Department (Government Code § 7071).

(e) Preparing for, scheduling, and coordinating the annual community engagement meeting to include:

1. Publicizing the details of the meeting.
2. Preparing for public questions regarding the department's funding, acquisition, and use of equipment.

(f) Preparing the annual military equipment report for submission to the Chief of Police and ensuring that the report is made available on the department website (Government Code § 7072).

(g) Establishing the procedure for a person to register a complaint or concern, or how that person may submit a question about the use of a type of military equipment, and how the Department will respond in a timely manner.

706.4 MILITARY EQUIPMENT INVENTORY

The following constitutes a list of qualifying equipment for the Department:

See attachment: Military Equipment 2025.pdf

706.5 APPROVAL

The Chief of Police or the authorized designee shall obtain approval from the governing body by way of an ordinance adopting the military equipment policy. As part of the approval process, the Chief of Police or the authorized designee shall ensure the proposed military equipment policy is submitted to the governing body and is available on the department website at least 30 days prior to any public hearing concerning the military equipment at issue (Government Code § 7071). The military equipment policy must be approved by the governing body prior to engaging in any of the following (Government Code § 7071):

Copyright Lexipol, LLC 2025/02/07, All Rights Reserved.
Published with permission by Roseville Police Department

(a) Requesting military equipment made available pursuant to 10 USC § 2576a.

(b) Seeking funds for military equipment, including but not limited to applying for a grant, soliciting or accepting private, local, state, or federal funds, in-kind donations, or other donations or transfers.

(c) Acquiring military equipment either permanently or temporarily, including by borrowing or leasing.

(d) Collaborating with another law enforcement agency in the deployment or other use of military equipment within the jurisdiction of this department.

(e) Using any new or existing military equipment for a purpose, in a manner, or by a person not previously approved by the governing body.

(f) Soliciting or responding to a proposal for, or entering into an agreement with, any other person or entity to seek funds for, apply to receive, acquire, use, or collaborate in the use of military equipment.

(g) Acquiring military equipment through any means not provided above.

706.6 COORDINATION WITH OTHER JURISDICTIONS

Military equipment should not be used by any other law enforcement agency or member in this jurisdiction unless the military equipment is approved for use in accordance with this policy.The Department should not use military equipment belonging to any other law enforcement agency unless the military equipment is approved for use in that jurisdiction.

Military equipment use and acquisition is often a collaboration with the City of Rocklin and the Rocklin Police Department due to our regional SWAT and EOD teams.

706.7 ANNUAL REPORT

Upon approval of a military equipment policy, the Chief of Police or the authorized designee should submit a military equipment report to the governing body for each type of military equipment approved within one year of approval, and annually thereafter for as long as the military equipment is available for use (Government Code § 7072).

The Chief of Police or the authorized designee should also make each annual military equipment report publicly available on the department website for as long as the military equipment is available for use. The report shall include all information required by Government Code § 7072 for the preceding calendar year for each type of military equipment in department inventory.

706.8 COMMUNITY ENGAGEMENT

Within 30 days of submitting and publicly releasing the annual report, the Department shall hold at least one well-publicized and conveniently located community engagement meeting, at which the Department should discuss the report and respond to public questions regarding the funding, acquisition, or use of military equipment.

Copyright Lexipol, LLC 2025/02/07, All Rights Reserved.
Published with permission by Roseville Police Department

706.9 COMPLAINT PROCEDURE

All complaints or concerns regarding this policy will be handled pursuant to the Department's normal complaint process.

Copyright Lexipol, LLC 2025/02/07, All Rights Reserved.
Published with permission by Roseville Police Department

ORDINANCE NO. 6463

ADOPTING A MILITARY EQUIPMENT POLICY AND APPROVING THE USE, ACQUISITION, AND SEEKING OF FUNDING FOR MILITARY EQUIPMENT

THE CITY OF ROSEVILLE ORDAINS:

SECTION 1.

A. On September 30, 2021, Governor Gavin Newsom signed into law Assembly Bill 481, relating to the use of military equipment by law enforcement agencies.

B. Assembly Bill 481, codified at California Government Code sections 7070 through 7075, requires law enforcement agencies to obtain approval of the applicable governing body, by an ordinance adopting a "military equipment" use policy, at a regular meeting held pursuant to open meeting laws, prior to taking certain actions relating to the funding, acquisition, or use of military equipment. The term "military equipment" is defined in California Government Code section 7070(c).

C. Assembly Bill 481 allows the governing body of a city to approve the funding, acquisition, and/or use of military equipment within its jurisdiction only if it makes specified findings.

D. The proposed Roseville Police Department military equipment use policy is titled "Military Equipment", Policy No. 706, within the Roseville Police Department Policy Manual.

E. Roseville Police Department Policy No. 706 "Military Equipment", along with a list of current "military equipment", was published on the Roseville Police Department's internet website on January 28, 2022 and has remained published. The Roseville Police Department Policy No. 706 "Military Equipment" was presented to City Council for the City of Roseville on March 2, 2022.

F. The Roseville Police Department Policy No. 706 "Military Equipment" meets the requirements of California Government Code section 7070(d).

SECTION 2. The Council of the City of Roseville has reviewed the facts and findings made at the March 2, 2022, City Council meeting, and makes the following findings:

A. The "military equipment" (as defined by California Government Code section 7070(c)) is necessary because there is no reasonable alternative that can achieve the same objective of officer and civilian safety;

B. The proposed "Military Equipment" Policy No. 706 will safeguard the public's welfare, safety, civil rights, and civil liberties;

C. The current "military equipment" identified in "Military Equipment" Policy No. 706 and purchasing any future "military equipment" on the list of "military equipment" (as defined by California Government Code section 7070(c)) is reasonably cost effective compared to available alternatives that can achieve the same objective of officer and civilian safety;

D. Prior "military equipment" use complied with the military equipment use policy that was in effect at the time;

E. Roseville Police Department Policy No. 706 "Military Equipment" is approved and adopted and City Council authorizes the use, acquisition, and seeking of funds for all "military equipment" as defined by California Government Code section 7070(c) and Policy No. 706 "Military Equipment".

SECTION 3. This ordinance shall be effective at the expiration of thirty (30) days from the date of its adoption.

SECTION 4. The City Clerk is hereby directed to cause this ordinance to be published in full at least once within fourteen (14) days after it is adopted in a newspaper of general circulation in the City, or shall within fourteen (14) days after its adoption cause this ordinance to be posted in full in at least three (3) public places in the City and enter in the Ordinance Book a certificate stating the time and place of said publication by posting.

PASSED AND ADOPTED by the Council of the City of Roseville this 16th day of March, 2022, by the following vote on roll call:

AYES COUNCILMEMBERS: Alvord, Roccucci, Mendonsa, Bernasconi

NOES COUNCILMEMBERS: None

ABSENT COUNCILMEMBERS: Houdesheldt

MAYOR

ATTEST:

City Clerk

Communication

Meeting Date: 3/4/2026
Item #: VII.5
File #: 0400-04-17-1
Item ID: 2026-84

Title:	Infill PCL 13 1028 Main Street Subdivision Project — Notice of Completion
Contact:	Jeremy Knuthson 916-774-5252 jknuthson@roseville.ca.us

SUMMARY

Staff recommends approval of the Notice of Completion for the Infill PCL 13 1028 Main Street Subdivision Project as complete. The Engineering Division has made a final inspection of the project and has found the roadway infrastructure work complete in accordance with the improvement plans and City specifications. This action has no impact to the City's General Fund. Construction costs were paid by the developer.

RECOMMENDATION

Staff recommends that the City Council adopt the attached resolution accepting Infill PCL 13 1028 Main Street Subdivision Project as complete and authorizing the City Engineer to execute the Notice of Completion.

BACKGROUND

The Engineering Division has made a final inspection of the above project and has found the roadway infrastructure work complete in accordance with the improvement plans and City specifications.

FISCAL IMPACT

The actions requested as part of this action have no impact to the City's General Fund. Construction costs were paid by the developer.

ENVIRONMENTAL REVIEW

The California Environmental Quality Act (CEQA) does not apply to activities that will not result in a direct or reasonably foreseeable indirect physical change in the environment, or is otherwise not considered a project as defined by CEQA Statute §21065 and CEQA State Guidelines §15060(c)(3) and §15378. The Notice of Completion meets the above criteria and is not subject to CEQA. No additional environmental review is required.

CITY COUNCIL STRATEGIC PLAN/OVERARCHING GOALS

4. Invest in well-planned infrastructure and growth

Respectfully Submitted,
Jeremy Knuthson, Construction Inspector

Mike Isom, Development Services Director

ATTACHMENTS:

1. Resolution 26-042

2. Notice of Completion
3. Vicinity Map
4. Final Map

REVIEWERS:

Jeremy Knuthson, Development Services Department - Engineering Division	Created/Initiated - 2/11/2026
Marc Stout, Development Services Department - Engineering Division	Approved - 2/11/2026
Mike Isom, Development Services Department	Approved - 2/11/2026
Kelly Aye, City Attorney Department	Approved - 2/17/2026
Katrina Six, City Clerk Department	Approved - 2/17/2026
Ryan DeVore, City Manager Department - Assistant City Manager	Approved - 2/17/2026
Dennis Kauffman, City Manager Department - Assistant City Manager	Approved - 2/17/2026
Michelle Sheidenberger, City Attorney Department	Approved - 2/18/2026
Dominick Casey, City Manager Department - City Manager	Approved - 2/18/2026
Katrina Six, City Clerk Department	Final Approval - 2/18/2026

RESOLUTION NO. 26-042

RESOLUTION OF THE COUNCIL OF THE CITY OF ROSEVILLE ACCEPTING THE PUBLIC WORK KNOWN AS INFILL PCL 13 1028 MAIN STREET SUBDIVISION PROJECT, APPROVING THE "NOTICE OF COMPLETION", AND AUTHORIZING AND DIRECTING THE CITY ENGINEER TO EXECUTE SAID NOTICE ON BEHALF OF THE CITY OF ROSEVILLE, THEREFORE, AND ACCEPTING ALL DEDICATIONS OFFERED ON THE RECORDED MAP OF THE SUBDIVISION.

BE IT RESOLVED by the Council of the City of Roseville as follows:

1. The "Notice of Completion" on file in the City Clerk's Department relative to that public work known as the Infill PCL 13 1028 Main Street Subdivision Project is hereby approved and the public work accepted.

2. All of the right-of-way and easements offered for dedication on the final map of Infill PCL 13 1028 Main Street Subdivision Project recorded in Book GG of Maps, Page 91, in the office of the recorder of Placer County, is hereby accepted by the City in part as said dedications relates to the improvement plan set known as Infill PCL 13 1028 Main Street Subdivision Project.

3. The City Engineer is hereby authorized and directed to execute said Notice on behalf of the City of Roseville.

PASSED AND ADOPTED by the Council of the City of Roseville, this_____day of _____, 2026, by the following vote on roll call:

AYES COUNCILMEMBERS:

NOES COUNCILMEMBERS:

ABSENT COUNCILMEMBERS:

_____
MAYOR

ATTEST:

_____
CITY CLERK

RECORDING REQUESTED BY AND WHEN
RECORDED MAIL TO:

CITY CLERK
CITY OF ROSEVILLE
311 VERNON STREET
ROSEVILLE, CA 95678

Exempt from recording fees
Pursuant to Gov't Code §27383

NOTICE OF COMPLETION

NOTICE IS HEREBY GIVEN that the public work of improvement known as the Infill PCL 13 1028 Main Street Subdivision Project was completed and accepted by the City of Roseville on _____. The location is situated in the City of Roseville, County of Placer, State of California and is indicated on the attached map, marked as Exhibit "A" and incorporated herein by this reference. The real property herein described is owned by the City of Roseville, 311 Vernon Street, Roseville CA 95678.

The direct/general contractor on said project was General Engineering Technology.

The surety on said project was Atlantic Specialty Insurance Company

800175288.

_____

Marc Stout

City Engineer
City of Roseville
Owner

ATTEST:

_____
Carmen Avalos, City Clerk

State of California)
County of Placer)

I, Marc Stout, being first duly sworn, depose and say: I am the City Engineer of the City of Roseville, a municipal corporation in the State of California, owner of the property described in the above Notice. I am duly authorized to make this verification for and on behalf of the City of Roseville. I have read the Notice of Completion and know its contents and the facts stated therein are true.

_____

Marc Stout

City Engineer
City of Roseville

A notary public or other officer completing this certificate verifies only the identity of the individual who signed the document to which this certificate is attached, and not the truthfulness, accuracy, or validity of that document.

State of California)
County of Placer)

Subscribed and sworn to (or affirmed) before me on this _____ day of _____, 20___, Marc Stout proved to me on the basis of satisfactory evidence to be the person(s) who appeared before me.

_____

Place Notary Seal and/or Stamp Above *Signature of Notary Public*

Exhibit A: Location Map

City of Roseville
Infill PCL 13 1028 Main Street
Subdivision Project

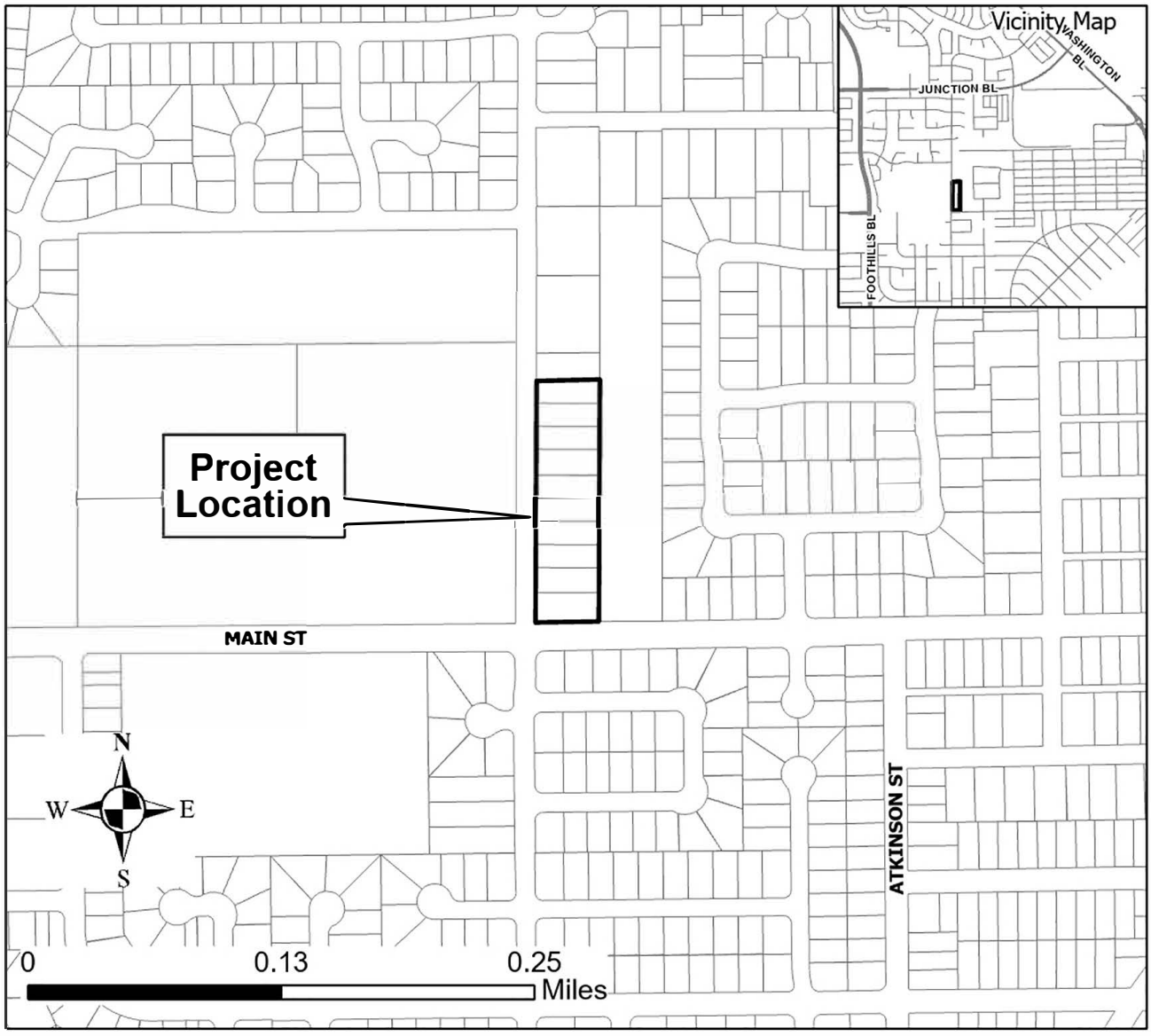

FINAL MAP OF INFILL PCL 13 1028 MAIN STREET SUBDIVISION

SUBDIVISION NUMBER PL21-0372
BEING A PORTION OF LOT 6 OF SUBDIVISION MAP
FILED IN BOOK C OF PARCEL MAPS, PAGE 58,
PLACER COUNTY RECORDS
LYING WITHIN PORTION OF SECTION 34,
T11N R6E, M.D.B. & M
CITY OF ROSEVILLE,
COUNTY OF PLACER, CALIFORNIA
KASL CONSULTING ENGINEERS, INC.
SEPTEMBER 2024
SHEET 1 OF 5

OWNER'S STATEMENT:

THE UNDERSIGNED HEREBY STATE THAT THEY ARE THE ONLY PERSONS HAVING ANY RECORD TITLE INTEREST IN THE REAL PROPERTY INCLUDED WITHIN THIS SUBDIVISION, AND THEY HEREBY CONSENT TO THE PREPARATION AND RECORDATION OF THIS FINAL MAP OF INFILL PCL 13 1028 MAIN STREET SUBDIVISION, AND HEREBY OFFER FOR DEDICATION AND DO HEREBY DEDICATE FOR PARTICULAR PURPOSES THE FOLLOWING:

THE REAL PROPERTY DESCRIBED BELOW IS DEDICATED IN FEE FOR PUBLIC PURPOSES:

(1) AS PUBLIC RIGHT OF WAY (INCLUDING IMPROVEMENTS THEREON) THE STREET SHOWN HEREON AS MAIN STREET.

THE REAL PROPERTY DESCRIBED BELOW IS DEDICATED AS AN EASEMENT FOR PUBLIC PURPOSES:

(1) PUBLIC EASEMENTS FOR THE INSTALLATION AND MAINTENANCE OF, BUT NOT LIMITED TO, WATER, SANITARY SEWER, AND GAS PIPES AND DRAINAGE PIPES TOGETHER WITH ANY AND ALL APPURTENANCES PERTAINING THERETO: AND FOR UNDERGROUND AND OVERHEAD WIRES AND CONDUITS FOR ELECTRIC, TELEVISION, AND TELEPHONE SERVICES: AND FOR ELECTROLIERS, TRAFFIC CONTROL APPURTENANCES, TOGETHER WITH ANY AND ALL APPURTENANCES PERTAINING THERETO, ON, OVER, UNDER AND ACROSS THE TEN (10) FEET AND TWELVE AND HALF (12.5) FEET WIDE STRIP(S) OF LAND CONTIGUOUS TO THE (STREET, BLVD....ETC) AND SHOWN HEREON AND DESIGNATED "P.U.E." (PUBLIC UTILITY EASEMENT)

THE REAL PROPERTY DESCRIBED BELOW IS DEDICATED AS AN EASEMENT FOR PRIVATE PURPOSES:

(1) PRIVATE DRAINAGE EASEMENTS (P.D.E.) TO BENEFIT LOTS 1-10 FOR DRAINAGE PURPOSES AND USES APPURTENANT THERETO, INCLUDING BUT NOT LIMITED THERETO THE CONSTRUCTION AND MAINTENANCE OF GRAVITY FLOW OR PRESSURE PIPE, OR OPEN DRAINAGE CHANNEL, AND STORMWATER QUALITY ENHANCEMENT FACILITIES UPON, OVER, UNDER AND ACROSS THOSE AREAS SO DESIGNATED.

ALL AS SHOWN ON SAID MAP, WITHIN SUBDIVISION.

ROSEVILLE 10, LLC, A DELAWARE
LIMITED LIABILITY COMPANY

BY: FDC NOR-CAL CORP., A CALIFORNIA CORPORATION
ITS: MANAGER

BY: _____
AARON ROSS

ITS: PRESIDENT

CITY ENGINEER STATEMENT

I HEREBY STATE THAT I HAVE EXAMINED THIS FINAL MAP OF INFILL PCL 13 1028 MAIN STREET SUBDIVISION AND FIND IT TO BE SUBSTANTIALLY THE SAME AS THE TENTATIVE MAP ON FILE AND ANY APPROVED ALTERATIONS THEREOF: THAT ALL PROVISIONS OF THE SUBDIVISION MAP ACT AND ALL APPLICABLE CITY ORDINANCES HAVE BEEN COMPLIED WITH.

_____ 9/12/24
MARC STOUT DATE
CITY ENGINEER, CITY OF ROSEVILLE
R.C.E. #69879 EXPIRATION DATE 9/30/24

I HEREBY STATE THAT I AM SATISFIED THAT THIS FINAL MAP OF INFILL PCL 13 1028 MAIN STREET SUBDIVISION IS TECHNICALLY CORRECT.

FOR MARC STOUT, CITY ENGINEER, CITY OF ROSEVILLE

_____ 9/13/24
TIMOTHY G. BLAIR DATE
PLS. #8278 EXPIRATION DATE: 12/31/25

PROFESSIONAL LAND SURVEYOR
TIMOTHY G. BLAIR
No. 8278
EXP. 12/31/25
STATE OF CALIFORNIA

ENGINEER'S STATEMENT:

THIS MAP WAS PREPARED BY ME OR UNDER MY DIRECTION AND IS BASED UPON A FIELD SURVEY IN CONFORMANCE WITH THE REQUIREMENTS OF THE SUBDIVISION MAP ACT AND LOCAL ORDINANCE AT THE REQUEST OF PAULINE C. VERRIS, ON MARCH 2023, AND THAT THE SURVEY IS TRUE AND COMPLETE AS SHOWN. I HEREBY STATE THAT ALL THE MONUMENTS ARE OF THE CHARACTER AND OCCUPY THE POSITIONS INDICATED OR THAT THEY WILL BE SET IN THOSE POSITIONS BEFORE JUNE 1, 2025, AND THAT THE MONUMENTS ARE, OR WILL BE, SUFFICIENT TO ENABLE THE SURVEY TO BE RETRACED, AND THAT THIS FINAL MAP SUBSTANTIALLY CONFORMS TO THE CONDITIONALLY APPROVED TENTATIVE MAP. ##MAP

JOHN C. SCROGGS R.C.E. 26388

September 3, 2024
DATE

EXPIRATION DATE: MARCH 31, 2026

REGISTERED PROFESSIONAL ENGINEER
JOHN C. SCROGGS
No. 26388
Exp. 3-31-26
CIVIL
STATE OF CALIFORNIA
*SCROGGS

S: 9-3-24

CITY CLERK'S STATEMENT

I HEREBY STATE THAT THE CITY COUNCIL OF THE CITY OF ROSEVILLE HAS APPROVED THIS FINAL MAP OF INFILL PCL 13 1028 MAIN STREET SUBDIVISION AND HAS ACCEPTED ON BEHALF OF THE PUBLIC THE PUBLIC UTILITY EASEMENTS AND THE RIGHT OF WAY OFFERED HEREON.

DATED September 12, 2024

_____
CITY CLERK, CITY OF ROSEVILLE

_____
ASSISTANT CITY CLERK

NOTARY'S ACKNOWLEDGMENT

A NOTARY PUBLIC OR OTHER OFFICER COMPLETING THIS CERTIFICATE VERIFIES ONLY THE IDENTITY OF THE INDIVIDUAL WHO SIGNED THE DOCUMENT TO WHICH THIS CERTIFICATE IS ATTACHED, AND NOT THE TRUTHFULNESS, ACCURACY, OR VALIDITY OF THAT DOCUMENT.

STATE OF CALIFORNIA
COUNTY OF SACRAMENTO

ON SEPTEMBER 4, 2024 BEFORE ME, KELLY BRACCIO MARTIN, A NOTARY PUBLIC,

PERSONALLY APPEARED AARON ROSS, WHO PROVED TO ME ON THE BASIS OF SATISFACTORY EVIDENCE TO BE THE PERSON(S) WHOSE NAME(S) ARE SUBSCRIBED TO THE WITHIN INSTRUMENT AND ACKNOWLEDGED TO ME THAT HE/SHE/THEY EXECUTED THE SAME IN HIS/HER/THEIR AUTHORIZED CAPACITY(IES), AND THAT BY HIS/HER/THEIR SIGNATURE(S) ON THE INSTRUMENT, THE PERSONS, OF THE ENTITY UPON BEHALF OF WHICH THE PERSON(S) ACTED, EXECUTED THE INSTRUMENT.

I CERTIFY UNDER PENALTY OF PERJURY UNDER THE LAWS OF THE STATE OF CALIFORNIA THAT THE FOREGOING PARAGRAPH IS TRUE AND CORRECT.

WITNESS MY HAND AND OFFICIAL SEAL.

Kelly Braccio Martin Kelly Braccio Martin
SIGNATURE PRINTED NAME

MY PRINCIPAL PLACE OF BUSINESS IS SACRAMENTO COUNTY

MY COMMISSION EXPIRES: NOVEMBER 12, 2024 MY COMMISSION NUMBER: 2337067

NOTARY'S ACKNOWLEDGMENT

A NOTARY PUBLIC OR OTHER OFFICER COMPLETING THIS CERTIFICATE VERIFIES ONLY THE IDENTITY OF THE INDIVIDUAL WHO SIGNED THE DOCUMENT TO WHICH THIS CERTIFICATE IS ATTACHED, AND NOT THE TRUTHFULNESS, ACCURACY, OR VALIDITY OF THAT DOCUMENT.

STATE OF CALIFORNIA
COUNTY OF _____

ON _____ BEFORE ME, _____, A NOTARY PUBLIC,

PERSONALLY APPEARED _____, WHO PROVED TO ME ON THE BASIS OF SATISFACTORY EVIDENCE TO BE THE PERSON(S) WHOSE NAME(S) ARE SUBSCRIBED TO THE WITHIN INSTRUMENT AND ACKNOWLEDGED TO ME THAT HE/SHE/THEY EXECUTED THE SAME IN HIS/HER/THEIR AUTHORIZED CAPACITY(IES), AND THAT BY HIS/HER/THEIR SIGNATURE(S) ON THE INSTRUMENT, THE PERSONS, OF THE ENTITY UPON BEHALF OF WHICH THE PERSON(S) ACTED, EXECUTED THE INSTRUMENT.

I CERTIFY UNDER PENALTY OF PERJURY UNDER THE LAWS OF THE STATE OF CALIFORNIA THAT THE FOREGOING PARAGRAPH IS TRUE AND CORRECT.

WITNESS MY HAND AND OFFICIAL SEAL.

_____
SIGNATURE PRINTED NAME

MY PRINCIPAL PLACE OF BUSINESS IS _____ COUNTY

MY COMMISSION EXPIRES: _____ MY COMMISSION NUMBER: _____

RECORDER'S STATEMENT:

ACCEPTED FOR RECORD AND FILED IN THE OFFICE OF THE RECORDER OF PLACER COUNTY, STATE OF CALIFORNIA, AT 23 MINUTES AFTER 3 O'CLOCK PM ON THE 18th DAY OF September, 2024 AND RECORDED IN BOOK GG OF MAPS, AT PAGE 91, AT THE REQUEST OF KASL CONSULTING ENGINEERS.

FEE $95.00 DOCUMENT NO 2024-0049669

RYAN RONCO Ryan Ronco
PLACER COUNTY RECORDER
STATE OF CALIFORNIA

BY J Scott DEPUTY DATE 9.18.2024

RECORD DATA

(R1) BOOK 1 R.O.S. PAGE 29
(R2) BOOK 15 P.M. PAGE 6
(R3) BOOK Q R.M. PAGE 88
(R4) BOOK 36 P.M. PAGE 18
(R5) BOOK 22 P.M. PAGE 141
(R6) BOOK AA R.M. PAGE 16
(R7) BOOK 8 P.M. PAGE 24
(R8) BOOK BB R.M. PAGE 11
(R9) BOOK M R.M. PAGE 28
(R10) BOOK C R.M. PAGE 58

LEGEND

- SET 1-5/32" BRASS DISK STAMPED "RCE 26388"
- SET 5/8" REBAR WITH CAP STAMPED "RCE 26388"
- FOUND MONUMENT AS DESCRIBED
- DIMENSION POINT
- SECTION CORNER
- BOUNDARY LINE OF SUBDIVISION
- P.U.E. PUBLIC UTILITY EASEMENT
- P.D.E. PRIVATE DRAINAGE EASEMENT
- (M) MEASURED
- (R) RECORD DATA
- (C) CALCULATED
- (OA) OVERALL DISTANCE
- R/W RIGHT OF WAY

NOTE: ALL DISTANCES ARE IN FEET AND DECIMALS THEREOF

NOTES:

(1) TOTAL AREA OF THIS SUBDIVISION IS 2.50 ± ACRES GROSS, CONSISTING OF 10 RESIDENTIAL LOTS.

(2) DUE TO ROUNDING, THE SUM OF THE INDIVIDUAL DIMENSIONS MAY NOT EQUAL THE OVERALL DIMENSION.

(3) ALL REAR LOT CORNERS AND ANGLE POINTS SHALL BE MARKED WITH A 5/8" REBAR WITH 1" ALUMINUM CAP STAMPED "R.C.E. 26388", WHERE MONUMENTS FALL ADJACENT TO A RETAINING WALL OR SOUNDWALL A 5/8 REBAR, WITH ALUMINUM CAP STAMPED "R.C.E 26388" WILL BE SET ON THE LOT LINE 2.00' OFFSET TO THE REAR LOT CORNER.

(4) ALL FRONT LOT CORNERS SHALL BE SET ON A 1.00 FOOT PROJECTION FROM THE PROPERTY LINE BY 1-5/32" BRASS DISK STAMPED R.C.E. 26388.

(5) A GEOTECHNICAL ENGINEERING REPORT FOR THIS SUBDIVISION WAS PREPARED BY ALLERION CONSULTING GROUP, INC PROJECT NUMBER 05-23033G IN JUNE 2023. A COPY OF THIS REPORT IS AVAILABLE FOR PUBLIC INSPECTION AT THE OFFICE OF THE CITY OF ROSEVILLE BUILDING INSPECTION DIVISION.

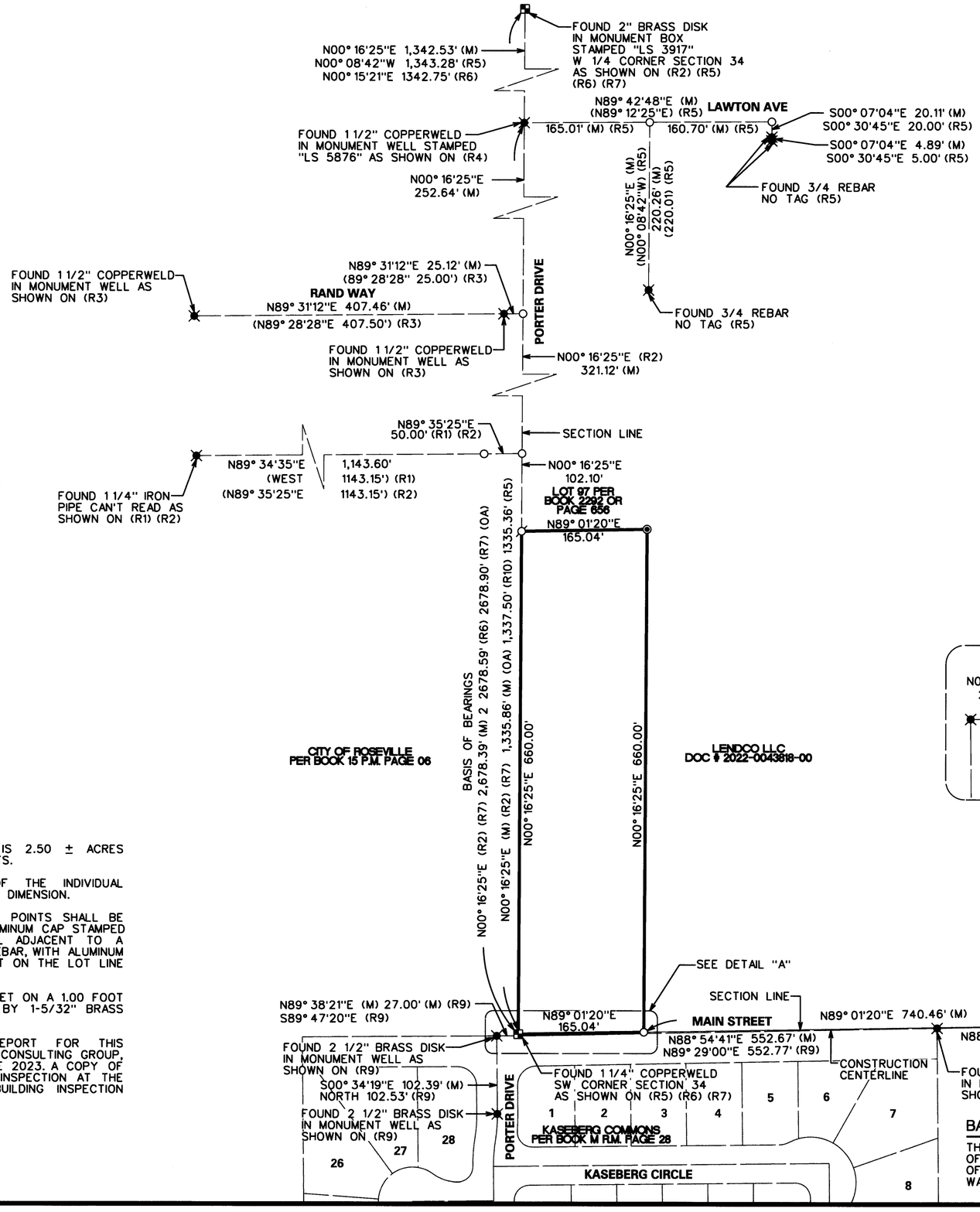

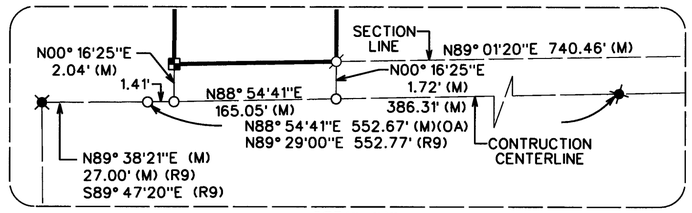

DETAIL "A"
NOT TO SCALE

BASIS OF BEARINGS:

THE MERIDIAN FOR THIS SURVEY IS THE WEST SECTION LINE OF SECTION 34, AS SHOWN ON PARCEL MAP FILED IN BOOK 15 OF PARCEL MAPS PAGE 06, BEING NORTH 00° 16"25" EAST AND WAS DETERMINED FROM THE MONUMENTS SHOWN HEREON.

FINAL MAP OF

INFILL PCL 13 1028 MAIN STREET SUBDIVISION

SUBDIVISION NUMBER PL21-0372
BEING A PORTION OF LOT 6 OF SUBDIVISION MAP FILED IN BOOK C OF PARCEL MAPS, PAGE 58, PLACER COUNTY RECORDS
LYING WITHIN PORTION OF SECTION 34, T11N R6E, M.D.B. & M
CITY OF ROSEVILLE, COUNTY OF PLACER, CALIFORNIA
KASL CONSULTING ENGINEERS, INC.
SEPTEMBER 2024
SHEET 2 OF 5

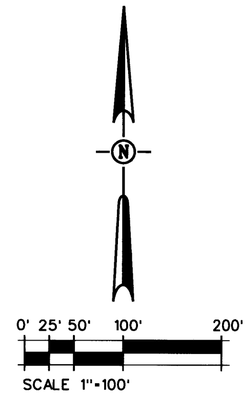

FINAL MAP OF

INFILL PCL 13 1028 MAIN STREET SUBDIVISION

SUBDIVISION NUMBER PL21-0372

BEING A PORTION OF LOT 6 OF SUBDIVISION MAP
FILED IN BOOK C OF PARCEL MAPS, PAGE 58,
PLACER COUNTY RECORDS
LYING WITHIN PORTION OF SECTION 34,
T11N R6E, M.D.B. & M
CITY OF ROSEVILLE,
COUNTY OF PLACER, CALIFORNIA
KASL CONSULTING ENGINEERS, INC.
SEPTEMBER 2024
SHEET 3 OF 5

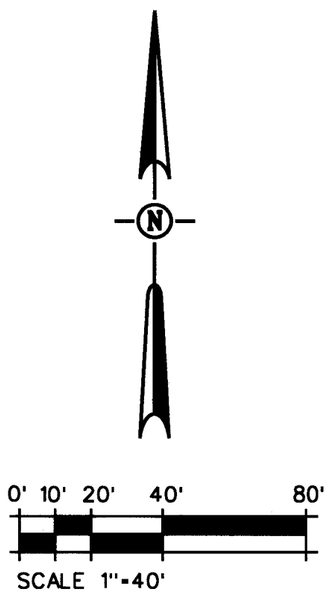

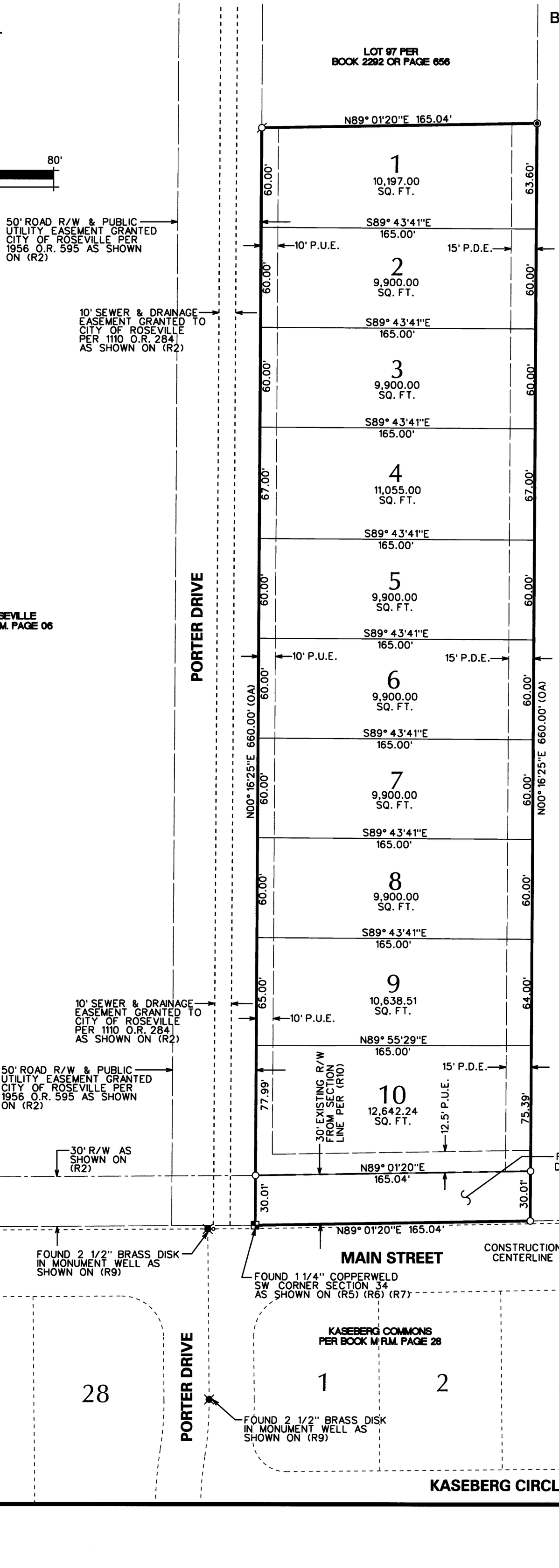

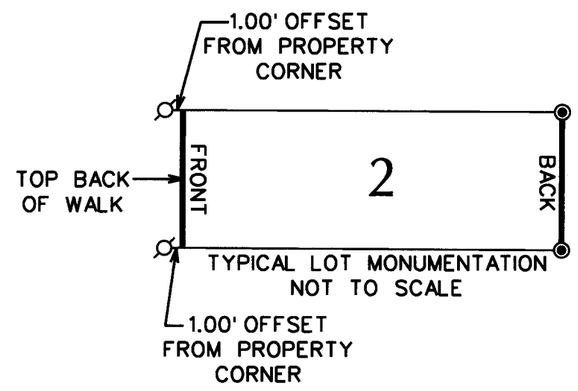

RECORD DATA

(R1)	BOOK 1 R.O.S. PAGE 29
(R2)	BOOK 15 P.M. PAGE 6
(R3)	BOOK Q R.M. PAGE 88
(R4)	BOOK 36 P.M. PAGE 18
(R5)	BOOK 22 P.M. PAGE 141
(R6)	BOOK AA R.M. PAGE 16
(R7)	BOOK 8 P.M. PAGE 24
(R8)	BOOK BB R.M. PAGE 11
(R9)	BOOK M R.M. PAGE 28
(R10)	BOOK C R.M. PAGE 58

LENDCO LLC
DOC # 2022-0043818-00

LEGEND

⌀	SET 1-1/32" BRASS DISK STAMPED "RCE 26388"
◉	SET 5/8" REBAR WITH ALUMINUM CAP STAMPED "RCE 26388"
✱	FOUND MONUMENT AS DESCRIBED
○	DIMENSION POINT
■	SECTION CORNER
———	BOUNDARY LINE OF SUBDIVISION
P.U.E.	PUBLIC UTILITY EASEMENT
P.D.E	PRIVATE DRAINAGE EASEMENT
(M)	MEASURED
(R)	RECORD DATA
(OA)	OVERALL DISTANCE
R/W	RIGHT OF WAY

NOTE: ALL DISTANCES ARE IN FEET AND DECIMALS THEREOF

BOOK GG OF MAPS, PAGE 91

SHEET 3 OF 5

FINAL MAP OF

INFILL PCL 13 1028 MAIN STREET SUBDIVISION

SUBDIVISION NUMBER PL21-0372

BEING A PORTION OF LOT 6 OF SUBDIVISION MAP FILED IN BOOK C OF PARCEL MAPS, PAGE 58, PLACER COUNTY RECORDS

LYING WITHIN PORTION OF SECTION 34, T11N R6E, M.D.B. & M
CITY OF ROSEVILLE,
COUNTY OF PLACER, CALIFORNIA
KASL CONSULTING ENGINEERS, INC.
SEPTEMBER 2024
SHEET 4 OF 5

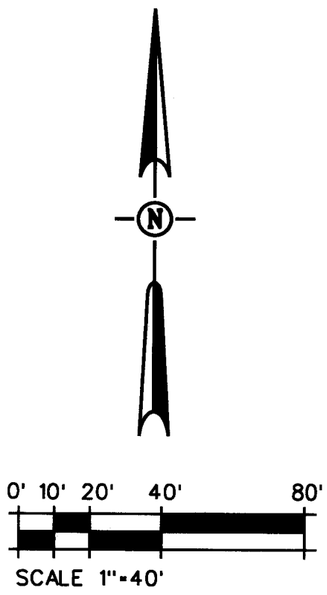

LOT 97 PER
BOOK 2292 OR PAGE 656

1 *
2 *
3 *
4 *
5 *
6 *
7 *
8 *
9 *
10 *

CITY OF ROSEVILLE
PER BOOK 15 P.M. PAGE 06

PORTER DRIVE

LENDCO LLC
DOC # 2022-0043818-00

ADDITIONAL INFORMATION FOR INFORMATIONAL PURPOSE ONLY PURSUANT TO SECTION 66434.2 OF THE GOVERNMENT CODE

EACH RESIDENTIAL DWELLING CONSTRUCTED ON ANY OF THE LOTS INDICATED SHALL BE FITTED WITH A SEWER BACKFLOW PREVENTER VALVE AS APPROVED BY THE CITY OF ROSEVILLE. IT SHALL BE THE RESPONSIBILITY OF THE OWNER OF SAID DWELLING TO MAINTAIN THE VALVE AND PREVENT DAMAGE FROM OCCURRING THERETO. THE CITY OF ROSEVILLE SHALL NOT BE RESPONSIBLE FOR THE MAINTENANCE OR PERFORMANCE OF THE VALVE, AND THE CITY OF ROSEVILLE SHALL NOT BE LIABLE FOR ANY DAMAGE OCCURRING TO ANY SUCH DWELLING OR ITS CONTENTS DUE TO FAILURE OF THE VALVE FOR ANY REASON WHATSOEVER.

LEGEND

* DENOTES SEWER BACKFLOW PREVENTER VALVE REQUIRED ON SANITARY SEWER CONNECTION BY THE CITY OF ROSEVILLE WITH THE BUILDING PERMIT AND MAINTAINED THEREAFTER BY THE OWNER.

MAIN STREET

27 28

PORTER DRIVE

KASEBERG COMMONS
PER BOOK M RM. PAGE 28

1 2 3 4 5 6

KASEBERG CIRCLE

SHEET 4 OF 5

BOOK 66 OF MAPS, PAGE 91

FINAL MAP OF

INFILL PCL 13 1028 MAIN STREET SUBDIVISION

SUBDIVISION NUMBER PL21-0372
BEING A PORTION OF LOT 6 OF SUBDIVISION MAP
FILED IN BOOK C OF PARCEL MAPS, PAGE 58,
PLACER COUNTY RECORDS
LYING WITHIN PORTION OF SECTION 34,
T11N R6E, M.D.B. & M
CITY OF ROSEVILLE,
COUNTY OF PLACER, CALIFORNIA
KASL CONSULTING ENGINEERS, INC.
SEPTEMBER 2024
SHEET 5 OF 5

TRUSTEE'S STATEMENT:

FIDELITY NATIONAL TITLE COMPANY, AS TRUSTEE UNDER THAT CERTAIN DEED OF TRUST DATED JUNE 14, 2024 AND RECORDED JUNE 14, 2024 AS DOCUMENT NO. 2024-0031011 OF OFFICIAL RECORDS OF PLACER COUNTY, STATE OF CALIFORNIA, HEREBY CONSENTS TO THE RECORDATION OF THIS FINAL MAP.

FIDELITY NATIONAL TITLE COMPANY

BY: _____

NAME: Bryan Shank

TITLE: Executive Vice President

NOTARY'S ACKNOWLEDGMENT

A NOTARY PUBLIC OR OTHER OFFICER COMPLETING THIS CERTIFICATE VERIFIES ONLY THE IDENTITY OF THE INDIVIDUAL WHO SIGNED THE DOCUMENT TO WHICH THIS CERTIFICATE IS ATTACHED, AND NOT THE TRUTHFULNESS, ACCURACY, OR VALIDITY OF THAT DOCUMENT.

STATE OF CALIFORNIA
COUNTY OF SACRAMENTO

ON 9.6.24 BEFORE ME, N. WARNER, A NOTARY PUBLIC,

PERSONALLY APPEARED BRYAN SHANK, WHO PROVED TO ME ON THE BASIS OF SATISFACTORY EVIDENCE TO BE THE PERSON(S) WHOSE NAME(S) ARE SUBSCRIBED TO THE WITHIN INSTRUMENT AND ACKNOWLEDGED TO ME THAT HE/SHE/THEY EXECUTED THE SAME IN HIS/HER/THEIR AUTHORIZED CAPACITY(IES), AND THAT BY HIS/HER/THEIR SIGNATURE(S) ON THE INSTRUMENT, THE PERSONS, OF THE ENTITY UPON BEHALF OF WHICH THE PERSON(S) ACTED, EXECUTED THE INSTRUMENT.

I CERTIFY UNDER PENALTY OF PERJURY UNDER THE LAWS OF THE STATE OF CALIFORNIA THAT THE FOREGOING PARAGRAPH IS TRUE AND CORRECT.

WITNESS MY HAND AND OFFICIAL SEAL.

_____ N. WARNER
SIGNATURE PRINTED NAME

MY PRINCIPAL PLACE OF BUSINESS IS SACRAMENTO COUNTY

MY COMMISSION EXPIRES: 9/12/26 MY COMMISSION NUMBER: 2415481

SHEET 5 OF 5

City Council Communication

Meeting Date: 3/4/2026
Item #: VII.6
File #: 0704
Item ID: 2026-96

Title:	Parking Lot at the Maidu Soccer Fields — Notice of Completion
Contact:	Nick Bumb 916-746-1313 nfbumb@roseville.ca.us

SUMMARY

Staff recommends approval of the Notice of Completion for the Parking Lot at the Maidu Soccer Fields. The project included the construction of 84 parking spaces, including accessible spaces, and installation of two drainage facilities to support the improvements. The total cost of the construction contract with BRCO Constructors, Inc. was $633,900. The project was funded by General Fund resources.

RECOMMENDATION

Staff recommends that the City Council accept the Parking Lot at the Maidu Soccer Fields as complete and adopt a resolution authorizing the Public Works Director to execute the Notice of Completion.

BACKGROUND

Maidu Regional Park is located at 1550 Maidu Drive and is a 152-acre site that includes a community center, library, sports courts area, four softball fields, five soccer fields, a looped trail system and a maintenance yard. The Maidu Museum and Historical Site is also located at Maidu Regional Park. This park was built in phases with the earliest construction beginning in 1987. The park's layout includes a circular parking lot that encompasses the softball fields set in a "wagon-wheel" configuration, including a portion that was still gravel. With increasing use of the soccer fields, it was determined that the gravel parking lot in front of the fields should be paved.

The project completed the paving of the parking lot which provided 84 total spaces for cars parking near the soccer fields and overflow for park users visiting other park facilities. In addition to paving the existing gravel parking lot, the project installed two drainage facilities to support the newly paved parking lot.

Public Works Engineering Division Staff completed the final inspection of the Parking Lot at the Maidu Soccer Fields and have found the work to be completed in accordance with the improvement plans and specifications. The project is now ready for acceptance. As required by the specifications, the contractor will guarantee the installation and improvements for a period of 12 months from the date of Notice of Completion.

FISCAL IMPACT

The project was awarded at the October 1, 2025 City Council meeting for a contract amount of $577,145.00 and a construction change order authority of 10% ($57,714.50). The final contract amount is $633,884.20 which exceeded the original contract amount by 9.83% ($56,739.20) and is within the approved contingency. The increase was a result of adjustments in actual quantities of the construction bid items and contract change orders based on unknown field and underground conditions. The project was funded by General Fund resources.

ENVIRONMENTAL REVIEW

The California Environmental Quality Act (CEQA) does not apply to activities that will not result in a direct or reasonably foreseeable indirect physical change in the environment, or is otherwise not considered a project as defined by CEQA Statute §21065 and CEQA State Guidelines §15060(c)(3) and §15378. The Notice of Completion meets the above criteria and is not subject to CEQA. No additional environmental review is required.

CITY COUNCIL STRATEGIC PLAN/OVERARCHING GOALS

4. Invest in well-planned infrastructure and growth

Respectfully Submitted,
Nick Bumb, Associate Engineer

Jason Shykowski, Public Works Director

ATTACHMENTS:

1. Resolution 26-044
2. Notice of Completion
3. Location Map

REVIEWERS:

Nick Bumb, Public Works Department - Engineering - City Project's	Created/Initiated - 2/5/2026
Jesse Khatkar, Public Works Department - Engineering - City Project's	Approved - 2/11/2026
Noah Siviglia, Public Works Department - Engineering - City Project's	Approved - 2/11/2026
Stefanie Kemen, Public Works Department - Administration Division	Approved - 2/11/2026
Kelly Aye, City Attorney Department	Approved - 2/17/2026
Katrina Six, City Clerk Department	Approved - 2/17/2026
Ryan DeVore, City Manager Department - Assistant City Manager	Approved - 2/17/2026
Dennis Kauffman, City Manager Department - Assistant City Manager	Approved - 2/17/2026
Michelle Sheidenberger, City Attorney Department	Approved - 2/18/2026
Dominick Casey, City Manager Department - City Manager	Approved - 2/18/2026
Katrina Six, City Clerk Department	Final Approval - 2/19/2026

RESOLUTION NO. 26-044

ACCEPTING THE PUBLIC WORK KNOWN AS PARKING LOT AT THE MAIDU SOCCER FIELDS, APPROVING THE "NOTICE OF COMPLETION", AND AUTHORIZING THE PUBLIC WORKS DIRECTOR TO EXECUTE SAID NOTICE ON BEHALF OF THE CITY OF ROSEVILLE

BE IT RESOLVED by the City Council of the City of Roseville as follows:

1. The "Notice of Completion" on file in the City Clerk's Department relative to that public work known as the Parking Lot at the Maidu Soccer Fields, has been approved and the public work accepted.

2. The Public Works Director is hereby authorized and directed to execute said Notice on behalf of the City of Roseville.

PASSED AND ADOPTED by the Council of the City of Roseville this ____ day of _____, 2026, by the following vote on roll call:

AYES COUNCILMEMBERS:

NOES COUNCILMEMBERS:

ABSENT COUNCILMEMBERS:

_____
MAYOR

ATTEST:

_____
City Clerk

RECORDING REQUESTED BY AND WHEN
RECORDED MAIL TO:

CITY CLERK
CITY OF ROSEVILLE
311 VERNON STREET
ROSEVILLE, CA 95678

Exempt from recording fees
Pursuant to Gov't Code §27383

NOTICE OF COMPLETION

NOTICE IS HEREBY GIVEN that the public work of improvement known as the Parking Lot at the Maidu Soccer Fields Project was completed and accepted by the City of Roseville on March 4, 2026. The location is situated in the City of Roseville, County of Placer, State of California and is indicated on the attached map, marked as Exhibit "A" and incorporated herein by this reference. The real property herein described is owned by the City of Roseville, 311 Vernon Street, Roseville CA 95678.

The direct/general contractor on said project was BRCO Constructors, Inc..

The surety on said project was Travelers Casualty and Surety Company.

_____

Jason Shykowski
Public Works Director
City of Roseville
Owner

ATTEST:

_____
Carmen Avalos, City Clerk

State of California)
County of Placer)

I, Jason Shykowski, being first duly sworn, depose and say: I am the Public Works Director of the City of Roseville, a municipal corporation in the State of California, owner of the property described in the above Notice. I am duly authorized to make this verification for and on behalf of the City of Roseville. I have read the Notice of Completion and know its contents and the facts stated therein are true.

_____

Jason Shykowski

Public Works Director

City of Roseville

A notary public or other officer completing this certificate verifies only the identity of the individual who signed the document to which this certificate is attached, and not the truthfulness, accuracy, or validity of that document.

State of California)
County of Placer)

Subscribed and sworn to (or affirmed) before me on this _____ day of _____, 20___, Jason Shykowski proved to me on the basis of satisfactory evidence to be the person(s) who appeared before me.

_____

Place Notary Seal and/or Stamp Above *Signature of Notary Public*

CITY OF ROSEVILLE CALIFORNIA

Public Works

PARKING LOT AT THE MAIDU SOCCER FIELDS

EXHIBIT "A"
LOCATION MAP

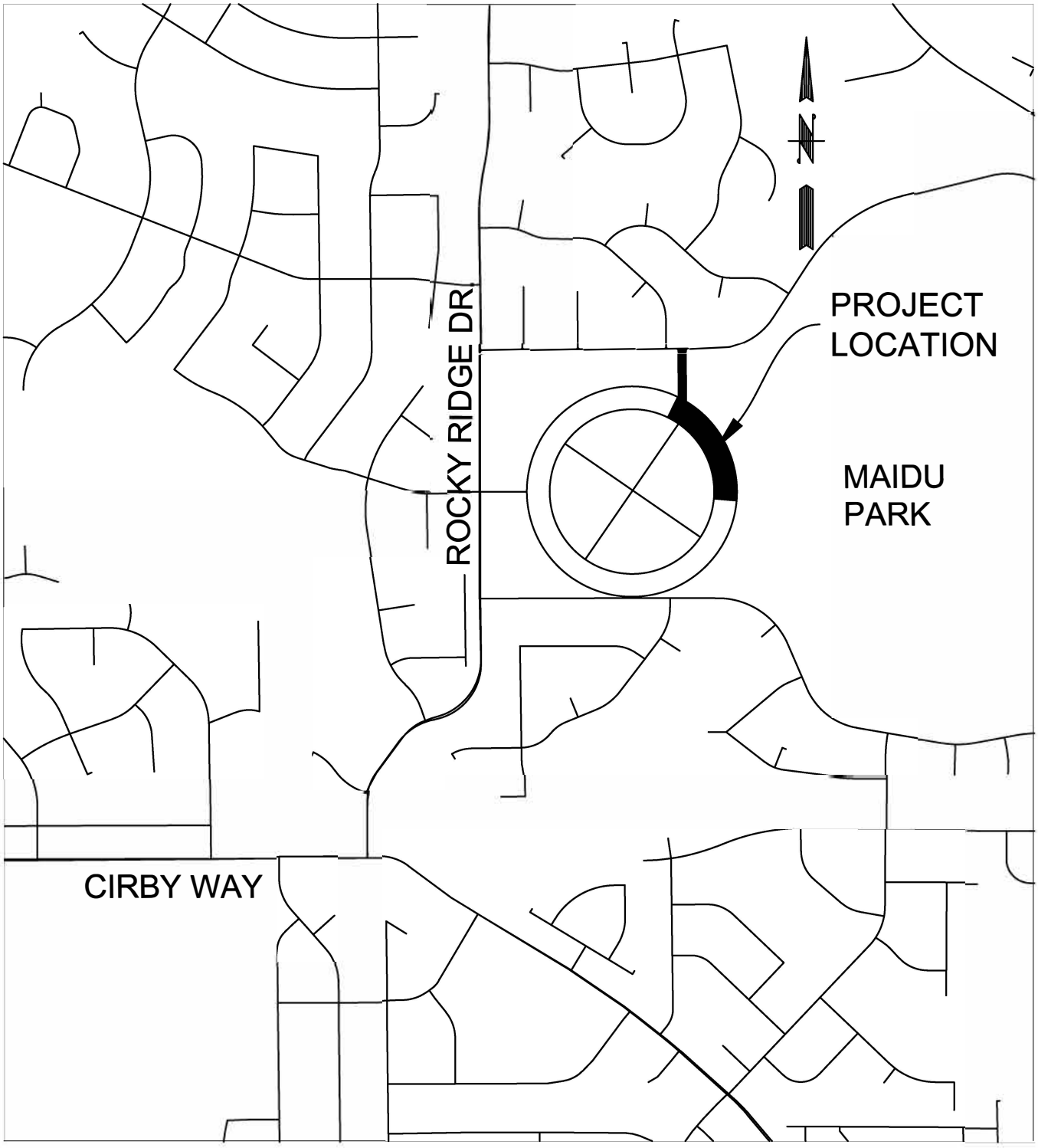

City Council Communication

Meeting Date: 3/4/2026
Item #: VII.7
File #: 0800-04 & 0214
Item ID: 2026-14

Title:	Federal Emergency Management Agency Fiscal Year 2025 Hazard Mitigation Grant Program – Application
Contact:	Brian Walker 916-746-1349 walkerbrian@roseville.ca.us

SUMMARY

Staff recommends authorization to submit a grant application to the Federal Emergency Management Agency (FEMA) through the California Office of Emergency Services (CalOES) for the Fiscal Year 2025 Hazard Mitigation Grant Program (HMGP) and authorizing the City Manager or his designee to execute all related forms and agreements on behalf of the City. If awarded, funds would be applied to the Pleasant Grove Stormwater Retention Basin Project. The project is funded by the Pleasant Grove/Curry Creek Watershed Drainage Mitigation Fee Fund. No General Fund resources are included for this project.

RECOMMENDATION

Staff recommends the City Council:

1. Adopt a resolution authorizing the Authorized Agent to submit a Hazard Mitigation Grant Program Application to the California Office of Emergency Services (CalOES) for the Federal Emergency Management Agency (FEMA) Fiscal Year 2025 Hazard Mitigation Grant Program;
2. Renew the designation of the Assistant City Manager and the Public Works Director as the City of Roseville Authorized Agents to the California Office of Emergency Services for all matters pertaining to obtaining federal financial assistance and State disaster assistance;
3. Authorize the Authorized Agent to execute all related forms and agreements to comply with all grant terms and conditions;
4. Direct staff to seek additional grant funding sources for the Pleasant Grove Stormwater Retention Basin Project.

BACKGROUND

Since 1990, the City has recognized the need for a stormwater facility to mitigate increased stormwater runoff volume resulting from new development in Roseville within the Pleasant Grove Creek watershed. In 1991, the City Council adopted the Pleasant Grove Watershed Drainage Mitigation Fee to begin collecting fees to be used for a city-wide solution within the watershed that would address potential downstream flood impacts.

The proposed Pleasant Grove Stormwater Retention Basin (PGSRB) facility is located adjacent to the Reason Farms Preserve, covering approximately 1,050 acres north of Phillip Road, extending to the northern and western City boundaries. Proposed improvements are anticipated to include an off-channel retention basin on the south side of Pleasant Grove Creek which would be fed by the existing Pleasant Grove Creek Bypass Channel east of Westbrook Blvd. Additional project features are being considered that would straddle University Creek. The retention basin facility is anticipated to meet the stormwater volume mitigation needs of current and future planned developments within the City's Pleasant Grove and

Curry Creek watersheds. The project is also envisioned to provide enhanced riparian, wetland, and upland habitats, and passive recreation (e.g., pedestrian and bicycle trails).

Although the project is anticipated to be completely developer-funded through the mitigation fee program, the award of grant funding would accelerate the timeline to construction of the project and deliver the required mitigation much sooner than relying upon impact fees alone.

California Governor's Office of Emergency Services (CalOES) has released a Notification of Funding Opportunity (NOFO) for FEMA's Hazard Mitigation Grant Program (DR-4856). The grant program is competitive at a state level, and provides funding for projects that reduce or eliminate the risk of repetitive flood damage to buildings and structures insured under the National Flood Insurance Program (NFIP). Staff believes the PGSRB Project will compete for this funding, given the nature of the work being performed, and requests the Council's authorization to apply for these funds.

In order for the City to obtain federal financial assistance under Public Law 93-288 as amended by the Robert T. Stafford Disaster Relief and Emergency Assistance Act of 1988, and/or state financial assistance under the California Disaster Assistance Act, the City must keep a resolution on file with CalOES designating an Authorized Agent or Agents to act on behalf of the City for a period of three years. At their March 3, 2021 meeting, the City Council designated the Assistant City Manager and the Public Works Director as the City of Roseville's Authorized Agents for correspondence regarding grant applications and acceptance of funds from these organizations for the City Roseville. The new designation will expire after a period of three years from the date of approval.

FISCAL IMPACT

The project is currently in design and estimated to cost approximately $65 million and is funded by developer-paid Pleasant Grove/Curry Creek Watershed Drainage Mitigation Fee Funds. If the project is awarded the Hazard Mitigation Grant, the City would receive $18 million to help accelerate the project timeline. No General Fund resources are included in this project.

ENVIRONMENTAL REVIEW

The California Environmental Quality Act (CEQA) does not apply to activities that will not result in a direct or reasonably foreseeable indirect physical change in the environment, or is otherwise not considered a project as defined by CEQA Statute §21065 and CEQA State Guidelines §15060(c)(3) and §15378. The submission of a grant application and designation of Authorized Agents to CalOES for all matters pertaining to State disaster assistance meets the above criteria and is not subject to CEQA. No additional environmental review is required.

CITY COUNCIL STRATEGIC PLAN/OVERARCHING GOALS

1. Ensure a safe and healthy community
2. Remain fiscally responsible in a changing world
4. Invest in well-planned infrastructure and growth

Respectfully Submitted,
Brian Walker, Senior Engineer

Jason Shykowski, Public Works Director

ATTACHMENTS:
1. Resolution 26-046
2. Application

REVIEWERS:

Joseph Anderson, Public Works Department – Engineering – Floodplain Management	Created/Initiated - 1/13/2026
Brian Walker, City Clerk Department	Approved - 2/11/2026
Noah Siviglia, Public Works Department - Engineering - City Project's	Approved - 2/11/2026
Stefanie Kemen, Public Works Department - Administration Division	Approved - 2/11/2026
Kelly Aye, City Attorney Department	Approved - 2/17/2026
Katrina Six, City Clerk Department	Approved - 2/18/2026
Ryan DeVore, City Manager Department - Assistant City Manager	Approved - 2/19/2026
Dennis Kauffman, City Manager Department - Assistant City Manager	Approved - 2/19/2026
Michelle Sheidenberger, City Attorney Department	Approved - 2/19/2026
Dominick Casey, City Clerk Department	Approved - 2/23/2026
Katrina Six, City Clerk Department	Final Approval - 2/23/2026

RESOLUTION NO. 26-046

APPROVING A GRANT APPLICATION TO THE CALIFORNIA OFFICE OF EMERGENCY SERVICES FOR THE FEDERAL EMERGENCY MANAGEMENT AGENCY FISCAL YEAR 2025 HAZARD MITIGATION GRANT PROGRAM, AND AUTHORIZING THE ASSISTANT CITY MANAGER OR PUBLIC WORKS DIRECTOR TO EXECUTE ALL RELATED FORMS AND AGREEMENTS ON BEHALF OF THE CITY OF ROSEVILLE

WHEREAS, since 1990, the City has recognized the need for a stormwater facility to mitigate increased stormwater runoff volume resulting from new development in Roseville within the Pleasant Grove Creek watershed; and

WHEREAS, the proposed Pleasant Grove Stormwater Retention Basin (PGSRB) facility is anticipated to include an off-channel retention basin that would meet the stormwater volume mitigation needs of current and future planned developments within the City's Pleasant Grove and Curry Creek watersheds; and

WHEREAS, even though the project is anticipated to be completely developer-funded through the mitigation fee program, an award of grant funding would accelerate the timeline to construct the project and deliver the required mitigation much sooner than relying upon impact fees alone; and

WHEREAS, the California Governor's Office of Emergency Services (CalOES) has released a Notification of Funding Opportunity (NOFO) for the Federal Emergency Management Agency (FEMA) Fiscal Year 2025 Hazard Mitigation Grant Program (DR-4856); and

WHEREAS, the grant program is competitive at a State level, and provides funding for projects that reduce or eliminate the risk of repetitive flood damage to buildings and structures insured under the National Flood Insurance Program (NFIP); and

WHEREAS, staff believes the PGSRB Project will compete for this funding, given the nature of the work being performed, and requests the Council's authorization to apply for these funds.

NOW, THEREFORE, BE IT RESOLVED that the City Council of the City of Roseville hereby authorizes staff to submit a grant application to the California Office of Emergency Services for the Federal Emergency Management Agency grant funding for the Pleasant Grove Stormwater Retention Basin Project.

BE IT FURTHER RESOLVED that the Assistant City Manager and Public Works Director are hereby designated as Authorized Agents to the California Office of Emergency Services for all matters pertaining to obtaining federal financial assistant and State disaster assistance and are authorized to execute all related forms and agreements to comply with all grant terms and conditions.

BE IT FURTHER RESOLVED that this resolution is effective upon execution by the Mayor and City Clerk and shall remain in effect for a period of three (3) years.

PASSED AND ADOPTED by the Council of the City of Roseville this ___ day of _____, 2026, by the following vote on roll call:

AYES COUNCILMEMBERS:

NOES COUNCILMEMBERS:

ABSENT COUNCILMEMBERS:

_____
MAYOR

ATTEST:

_____
City Clerk

DESIGNATION OF APPLICANT'S AGENT RESOLUTION FOR NON-STATE AGENCIES

BE IT RESOLVED BY THE City Council OF THE City of Roseville
(Governing Body) (Name of Applicant)

THAT Assistant City Manager, OR
(Title of Authorized Agent)

Public Works Director, OR
(Title of Authorized Agent)

_____
(Title of Authorized Agent)

is hereby authorized to execute for and on behalf of the City of Roseville,
(Name of Applicant)
a public entity established under the laws of the State of California, this application and to file it with the California Governor's Office of Emergency Services for the purpose of obtaining federal financial assistance for any existing or future grant program, including, but not limited to any of the following:

- **Federally declared Disaster (DR), Fire Mitigation Assistance Grant (FMAG), California State Only Disaster (CDAA), Immediate Services Program (ISP), Hazard Mitigation Grant Program (HMGP), Building Resilient Infrastructure and Communities (BRIC), Legislative Pre-Disaster Mitigation Program (LPDM),** under
- Public Law 93-288 as amended by the Robert T. Stafford Disaster Relief and Emergency Assistance Act of 1988, and/or state financial assistance under the California Disaster Assistance Act.
- **Flood Mitigation Assistance Program (FMA)**, under Section 1366 of the National Flood Insurance Act of 1968.
- **National Earthquake Hazards Reduction Program (NEHRP)** 42 U.S. Code 7704 (b) ((2) (A) (ix) and 42 U.S. Code 7704 (b) (2) (B) National Earthquake Hazards Reduction Program, and also The Consolidated Appropriations Act, 2018, Div. F, Department of Homeland Security Appropriations Act, 2018, Pub. L. No. 115-141
- **California Early Earthquake Warning (CEEW)** under CA Gov Code – Gov, Title 2, Div. 1, Chapter 7, Article 5, Sections 8587.8, 8587.11, 8587.12

That the City of Roseville, a public entity established under the
(Name of Applicant)
laws of the State of California, hereby authorizes its agent(s) to provide to the Governor's Office of Emergency Services for all matters pertaining to such state disaster assistance the assurances and agreements required.

DESIGNATION OF APPLICANT'S AGENT RESOLUTION NON-STATE AGENCIES

OES-FPD-130 (Rev. 10-2022)

Please check the appropriate box below

☑ This is a universal resolution and is effective for all open and future disasters/grants declared up to three (3) years following the date of approval.

☐ This is a disaster/grant specific resolution and is effective for only disaster/grant number(s):_____

Passed and approved this__day of _____, 20____

_____
(Name and Title of Governing Body Representative)

_____
(Name and Title of Governing Body Representative)

_____
(Name and Title of Governing Body Representative)

CERTIFICATION

I,_____, duly appointed and_____of
(Name) (Title)
City of Roseville, do hereby certify that the above is a true and
(Name of Applicant)
correct copy of a resolution passed and approved by the City Council
(Governing Body)
of the City of Roseville on the_____ day of _____, 20___.
(Name of Applicant)

_____ _____
(Signature) (Title)

Cal OES Form 130 Instructions

A Designation of Applicant's Agent Resolution for Non-State Agencies is required of all Applicants to be eligible to receive funding. A new resolution must be submitted if a previously submitted resolution is older than three (3) years from the last date of approval, is invalid, or has not been submitted.

When completing the Cal OES Form 130, Applicants should fill in the blanks on pages 1 and 2. The blanks are to be filled in as follows:

Resolution Section:

Governing Body: This is the group responsible for appointing and approving the Authorized Agents.

Examples include: Board of Directors, City Council, Board of Supervisors, Board of Education, etc.

Name of Applicant: The public entity established under the laws of the State of California.

Examples include: School District, Office of Education, City, County or Non-profit agency that has applied for the grant, such as: City of San Diego, Sacramento County, Burbank Unified School District, Napa County Office of Education, University Southern California.

Authorized Agent: These are the individuals that are authorized by the Governing Body to engage with the Federal Emergency Management Agency and the California Governor's Office of Emergency Services regarding grants for which they have applied. There are two ways of completing this section:

1. Titles Only: The titles of the Authorized Agents should be entered here, not their names. This allows the document to remain valid if an Authorized Agent leaves the position and is replaced by another individual. If "Titles Only" is the chosen method, this document must be accompanied by either a cover letter naming the Authorized Agents by name and title, or the Cal OES AA Names document. The supporting document can be completed by any authorized person within the Agency (e.g., administrative assistant, the Authorized Agent, secretary to the Director). It does not require the Governing Body's signature.

2. Names and Titles: If the Governing Body so chooses, the names **and** titles of the Authorized Agents would be listed. A new Cal OES Form 130 will be required if any of the Authorized Agents are replaced, leave the position listed on the document, or their title changes.

Checking Universal or Disaster-Specific Box: A Universal resolution is effective for all past disasters and for those declared up to three (3) years following the date of approval. Upon expiration it is no longer effective for new disasters, but it remains in effect for disasters declared prior to expiration. It remains effective until the disaster goes through closeout unless it is superseded by a newer resolution.

Governing Body Representative: These are the names and titles of the approving Board Members.

Examples include: Chairman of the Board, Director, Superintendent, etc. The names and titles **cannot** be one of the designated Authorized Agents. A minimum of three (3) approving board members must be listed. If less than three are present, meeting minutes must be attached in order to verify a quorum was met.

Certification Section:

Name and Title: This is the individual in attendance who recorded the creation and approval of this resolution.

Examples include: City Clerk, Secretary to the Board of Directors, County Clerk, etc. This person **cannot** be one of the designated Authorized Agents or Approving Board Member. If a person holds two positions (such as City Manager and Secretary to the Board) and the City Manager is to be listed as an Authorized Agent, then that person could sign the document as Secretary to the Board (not City Manager) to eliminate "Self-Certification."

City Council Communication

Meeting Date: 3/4/2026
Item #: VII.8
File #: 0721
Item ID: 2026-123

Title:	Fiscal Year 2024-25 Transporation Development Act Claim Revision
Contact:	Kimberly Goulet 916-746-1320 kegoulet@roseville.ca.us

SUMMARY

Staff recommends approval of the revised Fiscal Year 2024-25 Transportation Development Act claim in the amount of $12,563,878 for the City's transit and transportation funding, and authorization for the City Manager or his designee to execute the claim on behalf of the City. Included in this approval is a payment of $59,547 to Placer County Transportation Planning Agency for Roseville's share of the Funding Strategy Outreach program.

RECOMMENDATION

Staff recommends the City Council:

1. Adopt a resolution to approve the Fiscal Year (FY) 2024-25 Transportation Development Act (TDA) claim revision in the amount of $12,563,878 and authorize the City Manager or his designee to execute the claim on behalf of the City; and
2. Approve payment of FY2024-25 LTF funds to Placer County Transportation Planning Agency in the amount of $59,547 for the PCTPA Funding Strategy Outreach program.

BACKGROUND

The Placer County Transportation Planning Agency (PCTPA) has adopted the FY2024-25 Final Findings of Apportionment for the Local Transportation Fund (LTF), State Transit Assistance (STA), and Senate Bill 1 (SB 1) State of Good Repair (SGR). Together, these programs comprise the Transportation Development Act (TDA) resources.

LTF revenue comes from a 1/4 cent sales tax in Placer County and is used for local transportation programs. The adopted LTF apportionment resulted in $10,865,437 in LTF available to Roseville for FY2024-25. Of the City's LTF revenue, $59,547 is recommended to be paid to Placer County Transportation Planning Agency for the PCTPA Funding Strategy Outreach program to increase public awareness and understanding of transportation needs and funding challenges. The claim revision will true-up the LTF claimed with the Transit and Transportation funding earned in FY2024-25.

STA revenue is derived from state diesel fuel excise taxes with augmentation from SB1 funds. STA funds are applied to administration, operations, maintenance, and capital projects for the City's transit system. The total STA funds available to Roseville in FY2024-25 is $1,468,986.

SB 1 's State of Good Repair (SGR) program provides needed funding towards maintenance of the Roseville Transit bus fleet. The SGR program is funded by a portion of the State Transportation Improvement Fee on vehicle registrations. The amount of SGR funds available to Roseville in FY2024-25 is $229,455. Combining LTF, STA and SGR funds equals a total request of $12,563,878.

FISCAL IMPACT

The TDA claim revision provides a total of $12,563,878 in revenues that are allocated to the Transportation and Transit Fund programs and projects. A payment of $59,547 is recommended to Placer County Transportation Planning Agency for the PCTPA Funding Strategy Outreach program. There is no fiscal impact to the General Fund.

ENVIRONMENTAL REVIEW

The California Environmental Quality Act (CEQA) does not apply to activities that will not result in a direct or reasonably foreseeable indirect physical change in the environment or is otherwise not considered a project as defined by CEQA Statute §21065 and CEQA State Guidelines §15060(c)(3) and §15378. Submission of the FY2024/25 Transportation Development Act Claim action meets the above criteria and is not subject to CEQA. No additional environmental review is required.

CITY COUNCIL STRATEGIC PLAN/OVERARCHING GOALS

2. Remain fiscally responsible in a changing world

Respectfully Submitted,
Kimberly Goulet, Administrative Technician

Jason Shykowski, Public Works Director

ATTACHMENTS:

1. Resolution 26-053
2. 01 - TDA Claim Forms FY 2024-25 Corrected
3. Copy of Correction_KG - FY_2024-25 TDAClaimWorksheet Final
4. TDA Allocations FY2024-25

REVIEWERS:

Kimberly Goulet, Public Works Department - Transportation	Created/Initiated - 2/11/2026
Ed Scofield, Public Works Department - Transportation	Approved - 2/11/2026
Jason Shykowski, Public Works Department - All	Approved - 2/12/2026
Kelly Aye, City Attorney Department	Approved - 2/18/2026
Katrina Six, City Clerk Department	Approved - 2/18/2026
Ryan DeVore, City Manager Department - Assistant City Manager	Approved - 2/19/2026
Dennis Kauffman, City Manager Department - Assistant City Manager	Approved - 2/20/2026
Michelle Sheidenberger, City Attorney Department	Approved - 2/20/2026
Dominick Casey, City Clerk Department	Approved - 2/23/2026
Katrina Six, City Clerk Department	Final Approval - 2/23/2026

RESOLUTION NO. 26-053

APPROVING AND AUTHORIZING EXECUTION OF THE 2024/25 TRANSPORTATION DEVELOPMENT ACT CLAIMS REVISION TO THE PLACER COUNTY TRANSPORTATION PLANNING AGENCY

WHEREAS, the California Public Utilities Code, commencing with Section 99200, and Title 21 of the California Code of Regulations, commencing with Section 6600, authorize local transportation funding available through the Local Transportation Fund and State Transit Assistance Fund established by the Transportation Development Act; and

WHEREAS, the Placer County Transportation Planning Agency is responsible for reviewing and approving annual transportation claims, and for making allocations from the Local Transportation Fund and State Transit Assistance Funds.

NOW, THEREFORE, BE IT RESOLVED that the City Council of the City of Roseville hereby authorizes and directs the City Manager to execute the FY2024/25 Transportation Development Act Claims revision in the amount of $12,563,878 to the Placer County Transportation Planning Agency as follows:

1. Local Transportation Funds for public transportation system purposes as authorized by Article 4, commencing with Section 99260 of the California Public Utilities Code and for streets and roads purposes authorized by Article 8, commencing with Section 99400 of the California Public Utilities Code, in an aggregate amount not to exceed $10,865,437.
2. State Transit Assistance Funds for transit operations, as authorized by Section 99313 and Section 99314 of the California Public Utilities Code, Chapter 4, Article 6.5, in an aggregate amount not to exceed $1,468,986.
3. State of Good Repair Funds for transit maintenance as provided by in Senate Bill 1, in an aggregate amount not to exceed $229,455.

PASSED AND ADOPTED by the Council of the City of Roseville this ___ day of _____, 20__, by the following vote on roll call:

AYES COUNCILMEMBERS:

NOES COUNCILMEMBERS:

ABSENT COUNCILMEMBERS:

_____
MAYOR

ATTEST:

_____
City Clerk

Transportation Development Act Claim Forms



Placer County Transportation Planning Agency

Contents

TDA CLAIM FORMS 2

ANNUAL VERIFICATION OF TDA COMPLIANCE TO ACCOMPANY LTF AND STA CLAIMS FOR TRANSIT / STREETS AND ROADS PURPOSES 3

STATE TRANSIT ASSISTANCE QUALIFYING CRITERIA WORKSHEET INSTRUCTIONS 6

CLAIM FOR LOCAL TRANSPORTATION FUNDS **7**

CLAIM FOR STATE TRANSIT ASSISTANCE FUNDS 8

CLAIM FOR STATE OF GOOD REPAIR PROGRAM FUNDS 9

TDA ANNUAL PROJECT AND FINANCIAL PLAN 10

SAMPLE RESOLUTION 11

PLACER COUNTY TRANSPORTATION PLANNING AGENCY

TDA CLAIM FORMS

TRANSPORTATION DEVELOPMENT ACT (TDA) CLAIM FORMS MUST BE SUBMITTED TO PCTPA A MINIMUM OF THREE WEEKS PRIOR TO A PCTPA BOARD MEETING. FOR THE LATEST BOARD MEETING SCHEDULE, VISIT WWW.PCTPA.NET**.**

A completed claim package includes the following completed forms:

- TDA Compliance Checklist
- TDA Claim Worksheet (*Excel file*)
- STA Qualifying Criteria Worksheet (*Excel file*)
- Claim for Local Transportation Funds
- Claim for State Transit Assistance Funds
- Claim for State of Good Repair Program Funds
- TDA Annual Project and Financial Plan (*see attached sample*)

Certified copy of resolution from the claimant's governing board approving the claim and its submittal to PCTPA. **The resolution must include the amount claimed, the fiscal year for which funds are claimed, and the purpose for which the claim is made, identified by the article and section of the Act which authorizes such claims.** See attached sample resolution.

If claiming Article 8c funds, copy of signed contract with whom claimant is contracting for transit service.

Only ONE copy of the claim form and PCTPA Board of Directors resolution will be returned to the claimant following approval.

Audit Policy
To help ensure that TDA audits are completed in a timely manner and the requirements of the TDA are met, the following policy was adopted by the PCTPA Board on March 22, 2006:

> *After approval of the Final TDA Apportionment, claimants who submit TDA claims will receive only 50% of the total approved Local Transportation Fund (LTF) claim if a completed TDA audit has not been received by PCTPA at the time of the claim.*

The remaining 50% of approved LTF claim will be paid to the claimant upon receipt by PCTPA of the completed TDA audit. State Transit Assistance (STA) claims will be paid in full following approval of an STA claim, regardless of whether a completed TDA audit has been received.

ANNUAL VERIFICATION OF TDA COMPLIANCE TO ACCOMPANY LTF AND STA CLAIMS FOR TRANSIT / STREETS AND ROADS PURPOSES

PART I – ALL CLAIMANTS

1. Date annual TDA fiscal and compliance audit was approved by PCTPA Board: Click or tap to enter a date.

2. Is the claimant's retirement system fully funded?
   ☐ YES
   ☒ NO

3. Is the claimant using the maximum Federal funds available for transit and/or streets/roads purposes?
   ☒ YES
   ☐ NO

PART II – TRANSIT CLAIMANTS

4. Date Transit Operator's Financial Transaction Report was submitted to State Controller's Office: Click or tap to enter a date. Attach copy of dated, signed cover sheet rom report.

5. Are public transit vehicles routinely staffed with one driver?
   ☒ YES
   ☐ NO (Explain) Click or tap here to enter text.

6. Has the proposed transit operating budget changed by more than 15% compared to the previous year?
   ☐ Yes (Explain) Click or tap here to enter text.
   ☒ NO

7. Did the transit operator meet its minimum farebox recovery requirement during the previous fiscal year? (requirement: 15% - Roseville; 12.94% - Placer County; 10% - Auburn)[1]
   ☒ YES
   ☐ NO (see below)

   If the farebox recovery requirement was not met, then claimant must complete the following worksheet for the most recent fiscal year.

[1]Assembly Bill 90, 2019-20 [Reg. Session] temporarily prohibits the penalty for non-compliance with farebox recovery ratio requirement during FY 2019-20 and 2020-21. The claimant should still identify whether the requirement was met. AB 149 of 2021 extends the non-compliance relief through FY 2022/23, and AB 125 of 2023 further extended it through FY 2025/26.

Transit Operating Expenses:	enter text.	+	
Capital Purchases/Reserves:	enter text.	=	LTF spent in most
Subtotal:	enter text.	-	recent fiscal year
Federal Revenues:	enter text.	=	cannot exceed
STA Revenues:	enter text.	-	result below.
Total:	enter text.	* 0.5=	enter text.

8. Is there a prohibition on the employment of part-time drivers or on contracting with common carriers?

☐ YES

☒ NO (Explain) Click or tap here to enter text.

9. Are STA funds being used for transit operating purposes this fiscal year?

☒ YES (see below)

☐ NO

If STA funds are being used for transit operating purposes, indicate which efficiency standard was met. In calculating the operating cost, operators may exclude costs that exceed prior year costs, as adjusted by the CPI. *Notes: (1) Use the STA Qualifying Criteria worksheet contained in the TDA Claim workbook to determine* eligible *exclusions. (2) These items may also be excluded when computing the farebox recovery ratio. (3) You may refer to operating cost figures from TDA fiscal audits for the* applicable *fiscal year.*

Efficiency Standard #1: ☒ Yes ☐ No[2]

Efficiency Standard #2: ☒ Yes ☐ No[2]

If neither efficiency standard was met, list the percentage of STA Funding limited to:
Capital Expenditures: Enter %% Operating Expenditures: Enter %.%

10. Describe or attach current fare structure:
Please see the attached fare structure as outlined in the Roseville Transit Service Guides, overview on Roseville Transit's website at https://www.roseville.ca.us/cms/One.aspx?portalId=7964922&pageId=8756474

11. Attach copy of latest CHP terminal inspection report. ATTACHED

12. Each transit claimant must report on efforts to implement recommendations included in the FY 2018/19 through FY 2020/21 Triennial Performance Audit, which was completed in 2022 (attach additional pages as necessary).
Roseville has developed a standard policy for calculating FTE's and we have been using that standard since the last Triennial Performance Audit.

[2]Assembly Bill 90, 2019-20 [Reg. Session] temporarily prohibits the penalty for non-compliance with required STA efficiency standards during FY 2019-20 and 2020-21. The claimant should still identify whether the standards was met. AB 149 of 2021 extends the non-compliance relief through FY 2022/23, and AB 125 of 2023 further extended it through FY 2025/26.

STATE TRANSIT ASSISTANCE
QUALIFYING CRITERIA WORKSHEET INSTRUCTIONS

Assembly Bill 90 of 2019-20 temporarily provides relief from non-compliance with STA Qualifying Criteria for FY 2019-20 and 2020-21 due to impact of COVID-19 on transit agencies. AB 149 of 2021 extended non-compliance relief through FY 2022/23, and AB 125 of 2023 further extended it through FY 2025/26.

The purpose of the STA Qualifying Criteria Worksheet is for the claimant to determine the proportion of STA funding eligible for operating and capital expenditures in the current fiscal year. Per STA regulations, one of two efficiency standards must be met for a claimant to utilize its full STA Allocation for operating purposes. The first efficiency standard evaluates whether the total operating cost per revenue vehicle hour increased at a rate greater than the prior year total operating cost per revenue vehicle hour as adjusted by the Consumer Price Index (CPI) for the State of California. The second efficiency standard evaluates whether the average total operating cost per revenue vehicle hour in the three latest years increased at a rate greater than the average of the preceding three years total operating cost per revenue vehicle hour as adjusted by CPI for the same period. Should neither efficiency standard be met, STA funding for operating expenditures will be reduced by the lowest percentage by which the claimant's total operating cost per revenue vehicle hour exceeded the target for either standard. The remaining percentage will be limited for capital expenditures.

The STA Qualifying Criteria worksheet is a tab embedded within the TDA Claim Worksheet. The STA Qualifying Criteria worksheet simplifies the process of calculating the proportion of STA funding eligible for operating and capital expenditures. Please visit www.pctpa.net/TDA to download the file. The worksheet requires entry of the prior four years audited data for operating costs, allowable cost exemptions/exclusions under TDA, and revenue vehicle hours. Enter the appropriate numbers into Data Input Sections A, B, and D. DO NOT enter any numbers in the yellow highlighted boxes, as these boxes have been set up with formulas to automatically tabulate your claims. Cell O7 and O11 will indicate whether Efficiency Standard 1 or 2 are satisfied, respectively. Cell Q13 indicates the amount limited for capital expenditures while cell Q15 indicates the amount eligible for operating purposes. This information should be input into question 9 of the Annual Verification Of TDA Compliance. The excel version of the qualifying criteria worksheet should be submitted with all other documents and forms when submitting a claim.

CLAIM FOR LOCAL TRANSPORTATION FUNDS

TO: PLACER COUNTY TRANSPORTATION PLANNING AGENCY
2260 DOUGLAS BLVD, SUITE 130; ROSEVILLE, CA 95661

FROM:

CLAIMANT: City of Roseville
ADDRESS: 316 Vernon St
Roseville, CA 95678

CONTACT PERSON: Ed Scofield
Phone:916-774-5449 Email:ECScofield @roseville.ca.us

The City of Roseville hereby requests, in accordance with the State of California Public Utilities Code, commencing with Section 99200 and the California Code of Regulations commencing with Section 6600, that this claim for Local Transportation Funds be approved for Fiscal Year 2024/25, in the following amounts for the following purposes to be drawn from the Local Transportation Fund deposited with the Placer County Treasurer:

P.U.C. 99260a, Article 4, Transit Operations:	$4,752,907
P.U.C. 99260a, Article 4, Transit Capital:	$1,307,186
P.U.C. 99275, Article 4.5, Community Transit Services	
P.U.C. 99400a, Article 8a, Local Streets and Roads	$4,745,797
P.U.C. 99402, Article 8a, Transportation Planning Process	$59,547
P.U.C. 99400c, Article 8c, Contracted Transit Services:	
P.U.C. 99400e, Article 8e, Capital for Contracted Services:	
C.C.R. 6648, Capital Reserve:	

When approved, this claim will be transmitted to the Placer County Auditor for payment. Approval of the claim and payment by the County Auditor to the applicant is subject to such monies being available for distribution, and to the provisions that such monies will be used only in accordance with the terms of the approved annual financial plan and budget. Claimant must submit a complete Fiscal and Compliance Audit for the prior fiscal year prior to issuance of instructions to the County Auditor to pay the claimant in full.

APPROVED:
PLACER COUNTY
TRANSPORTATION PLANNING AGENCY
BOARD OF DIRECTORS

APPLICANT:

BY: _____ (signature)
TITLE: _____
DATE: _____

BY: _____ (signature)
TITLE: City Manager
DATE: _____

CLAIM FOR STATE TRANSIT ASSISTANCE FUNDS

TO: PLACER COUNTY TRANSPORTATION PLANNING AGENCY
2260 DOUGLAS BLVD, SUITE 130; ROSEVILLE, CA 95661

FROM:

CLAIMANT: City of Roseville
ADDRESS: 316 Vernon St
Roseville, CA 95678

CONTACT PERSON: Ed Scofield
Phone:916-774-5449 Email:ECScofield@roseville.ca.us

The City of Roseville hereby requests, in accordance with the State of California Public Utilities Code commencing with Section 99200 and the California Code of Regulations commencing with Section 6600, that this claim for State Transit Assistance be approved in the amount of $1,468,986 for Fiscal Year 2024/25 , in the following amounts for the following purposes to be drawn from the State Transit Assistance fund deposited with the Placer County Treasurer:

Transit Operations (6730a):	$1,468,986
Transit Capital (6730a):	$Click or tap here to enter $
Contracted Transit Services (6731b):	$Click or tap here to enter $
Community Transit Services Provided by WPCTSA (6731.1):	$Click or tap here to enter $

When approved, this claim will be transmitted to the Placer County Auditor for payment. Approval of the claim and payment by the County Auditor to the applicant is subject to such monies being available for distribution, and to the provisions that such monies will be used only in accordance with the terms of the approved annual financial plan and budget.

APPROVED:
PLACER COUNTY
TRANSPORTATION PLANNING AGENCY
BOARD OF DIRECTORS

APPLICANT:

BY: _____ (signature)
TITLE: _____
DATE: _____

BY: _____ (signature)
TITLE: City Manager
DATE: _____

CLAIM FOR STATE OF GOOD REPAIR PROGRAM FUNDS

TO: PLACER COUNTY TRANSPORTATION PLANNING AGENCY
2260 DOUGLAS BLVD, SUITE 130; ROSEVILLE, CA 95661

FROM:

CLAIMANT: City of Roseville
ADDRESS: 316 Vernon St
Roseville, CA 95678

CONTACT PERSON: Ed Scofield
Phone:916-774-5449 Email:ECScofield@roseville.ca.us

The City of Roseville hereby requests, in accordance with the State of California Public Utilities Code commencing with Section 99200 and the California Code of Regulations commencing with Section 6600, that this claim for State of Good Repair Funds be approved in the amount of $229,455 for Fiscal Year 2024/25, in the following amounts for the following purposes to be drawn from the State Transit Assistance fund deposited with the Placer County Treasurer.

Transit Capital (6730a): $229,455

When approved, this claim will be transmitted to the Placer County Auditor for payment. Approval of the claim and payment by the County Auditor to the applicant is subject to such monies being available for distribution, and to the provisions that such monies will be used only in accordance with the terms of the approved annual financial plan and budget.

APPROVED:
PLACER COUNTY
TRANSPORTATION PLANNING AGENCY
BOARD OF DIRECTORS

APPLICANT:

BY: _____ (signature)
TITLE: _____
DATE: _____

BY: _____ (signature)
TITLE: City Manager
DATE: _____

TDA ANNUAL PROJECT AND FINANCIAL PLAN

This form will show the planned expenditures of all TDA funds claimed for the fiscal year in addition to any TDA funds carried over from previous years. Briefly describe all operational, capital and/or streets and roads projects which will be funded by TDA moneys. **Please show BOTH prior year TDA funds (if any) and current year TDA funds to be used**, provide the total cost of each project, and indicate all other sources of funding associated with each project. For capital projects, the projects listed, and their associated costs and funding sources should be consistent with the budget developed in the TDA Claim Worksheet completed for the submittal of this claim. The total project cost and total funding source(s) listed below should balance for each project. See attached sample plan for additional guidance.

Claimant: City of Roseville

Fiscal Year: FY 2024/25

Brief Project Description	Project Cost		Source of Funding & Amount	
			Interest Earnings from FY24	$76,108
TRANSIT OPERATIONS	Administration & Svcs.	$7,695,522	Passenger Fares	$682,324
	Operating Reserve	$5,000,000	Federal Grants	$1,997,477
			State Grants	$0
			Local/Other Grants	$180,083
			LTF Article 4 FY25	$4,752,907
			STA FY25	$1,468,986
			CARRYOVER	$3,537,637
	OPERATING COSTS	$12,695,522	OPERATIONAL REVENUE	$12,695,522
TRANSIT CAPITAL PROJECTS	Transit Capital Projects	$5,751,132	Carryover	$4,203,867
	Capital Reserve	$2,000,000	FTA Capital Assistance	$1,588,936
			LTF Article 4 FY25	$1,307,186
			SB1 SGR FY25	$229,455
			State Grants	$421,688
	CAPITAL COSTS	$7,751,132	CAPITAL REVENUE	$7,751,132
STREETS AND ROADS	TSM & Bikeway Program	$1,026,220	Carryover	$6,493,219
	Maintenance-Roadway	$355,747	Interest Earnings from FY25	$86,123
	Construction	$7,077,682	LTF Article 8A FY25	$4,745,797
	Other	$222,717	Transp. Planning Process	$59,547
	Transp. Planning Process	$59,547	Federal Grants	$0
	Subtotal	$8,741,913	FY24 Claim Unreleased	$0
	Capital Reserve	$1,000,000	STREETS & ROAD REV.	$11,384,687
	STREETS & ROADS COSTS	$9,741,913	EST. CARRYOVER FY25	$1,642,774

SAMPLE RESOLUTION

In the matter of a Resolution approving and authorizing execution of the Fiscal Year 2024/2025 Local Transportation Fund, State Transit Assistance, and State of Good Repair Claims to the Placer County Transportation Planning Agency.

The following resolution was duly passed by the [name of governing board] of [name of claimant] at a regular meeting held [date of meeting], by the following vote:

Ayes:

Noes:

Absent:

Signed and approved by me after its passage. Attest:

[Signature of chair of governing board] [Signature of governing board clerk]

WHEREAS, the California Public Utilities Code commencing with Section 99200 and the California Code of Regulations commencing with Section 6600 authorizing local transportation funding available through the Local Transportation Fund and State Transit Assistance Fund established by the Transportation Development Act; and

WHEREAS, the Placer County Transportation Planning Agency is responsible for reviewing and approving annual transportation claims, and for making allocations from the Local Transportation Fund and State Transit Assistance Funds.

Be it hereby resolved by the [name of governing board] of [name of claimant] that the [chair of governing board or authorized staff person] is authorized and directed to execute the attached Fiscal Year 2024/25 Transportation Development Act Claim(s) to the Placer County Transportation Planning Agency, in the amount of:

$ [total LTF amount] of Local Transportation Funds for transit purposes as authorized by Article 4, commencing with Section 99260 of the California Public Utilities Code and Article 8 commencing with Section 99400(c).

$ [total LTF amount] of Local Transportation Funds for and for streets and roads purposes authorized by Article 8, commencing with Section 99400 and for the transportation planning process authorized by Article 8, commencing with section 99402.

$ [total STA amount] of State Transit Assistance funds for transit operations, as authorized by Section 99313 and Section 99314 of the California Public Utilities Code, Chapter 4, Article 6.5

$ [total SGR amount] of State of Good Repair funds for transit capital, as authorized by the Caltrans SGR guidelines and complying with Public Resources Code§ 21100 and§ 21150.).

$ [total LTF Bike/Ped amount] of Local Transportation Funds for bicycle and pedestrian purposes, as authorized by the California Public Utilities Code Section 99233.3, and by the California Code of Regulations Section 6655.2.

Be it further resolved that this claim is hereby approved by the [name of governing board].

PLACER COUNTY TRANSPORTATION PLANNING AGENCY
TRANSPORTATION DEVELOPMENT ACT CLAIM WORKSHEET

FISCAL YEAR: 2024/25

CITY/COUNTY OF: City of Roseville

Part 1 of 4

ESTIMATED PUBLIC TRANSIT REVENUES AND EXPENSES FOR FISCAL YEAR 2023/24

I. FY 2023/24 AVAILABLE RESOURCES

A. Carryover from prior fiscal year (Unexpended prior year transit cash receipts held in claimants treasury as of June 30, 2023. From TDA Financial Audit Report)	$	8,320,939.00
B. Interest Earnings through June 30, 2023.	$	38,763.00
C. Federal Grants & Reimbursements received in 2023/24:		
1. FTA Planning Assistance	$	-
2. FTA Operating Assistance	$	-
3. FTA Capital Assistance	$	1,504,369.65
4. Other (list)__COVID-19/ARPA/CARES_____	$	161,481.22
D. State Grants (Source/Amount):		
1. LCTOP- ZEB Replacement, ZEB Depot, Galleria Electric Charging Infrastructure	$	891,481.00
2. Caltrans- Roseville Transit Comprehensive Operational Analysis	$	130,361.12
3. Other	$	-
E. Local Cash Grants:		
1. LTF-Operations (PUC 99260a; Article 4)	$	2,484,854.50
2. LTF-Capital (PUC 99260a; Article 4)	$	2,024,350.50
3. LTF-Community Transit Services(PUC 99275; Article 4.5)	$	-
4. LTF-Contracted Transit Service (PUC 99400c; Article 8c)	$	-
5. LTF-Capital Reserve Contribution (CCR 6648)	$	-
6. LTF-Capital expenses for contracted transit services (PUC 99400e; Article 8e)	$	-
7. STAF-Operations (CCR 6730a)	$	1,532,812.00
8. STAF-Capital (CCR 6730b)	$	-
9. STAF-Community Transit Services (CCR 6730d; <CTSA>)	$	-
10. STAF-Contracted Service (CCR 6731b)	$	-
11. SGR-Capital (CCR 6730b)	$	198,196.00
F. Other Grants:		
1. PCAPCD- ZEB Depot	$	-
2. SPRTA- South Placer Capital	$	441,882.20
F. Operating Revenues:		

1. Passenger Fares	$	518,604.39
2. Charters	$	-
3. Other (list) _____	$	-
G. Other Revenues		
1. Other Revenues:	$	770,174.22
2. Interest Revenue	$	144,599.93
H. TOTAL FY 2023/24 AVAILABLE RESOURCES (A+B+C+D+E+F+G)	**$**	**19,162,868.73**

II. FY 2023/24 PROJECTED EXPENSES & USES

I. Personnel		
1. Administrative Salaries and Wages	$	555,144.49
2. Operating Salaries and Wages	$	-
3. Other Salaries and Wages	$	-
4. Fringe Benefits	$	264,918.16
J. Services and Supplies		
1. Professional Services	$	61,849.74
2. Maintenance Services	$	1,121,591.51
3. Other Services	$	(17,835.55)
4. Vehicle Materials & Supplies	$	689,320.06
5. Utilities	$	16,869.94
6. Insurance	$	69,757.00
7. Purchased Transit Services	$	3,703,125.08
8. Facility Services/System Repair & Maintenance	$	19,361.73
9. IT Services	$	125,414.00
10. Other Materials and Supplies	$	208,555.95
11. Indirect Costs & Other Costs Reimbursed	$	274,041.00
12. Miscellaneous	$	-
13. Interest	$	-
14. Leases & Rentals	$	-
15. Transfers Out - Transit Shuttle Fee	$	313,974.66
K. Capital Assets (Itemize)		
1. Taylor Rd Commuter Bus Stop	$	124,130.14
2. Commuter Bus Replacement	$	862,496.74
3. ZEB Depot Phase I	$	600,682.33
4. CorpYard Building B Improvements	$	16,831.33
5. Roseville Transit Comprehensive Operational Analysis	$	147,250.78
7. South Placer County Express Bus Service - Capital	$	1,272,753.07
8. ZEB Depot Phase II	$	928,477.94
9. PW-AT Workforce Development	$	9,094.02
10. Signal Pre-Emptions for Transit Services	$	45,117.75
L. Other Uses:		
1. Other Capital Projects	$	8,442.86
M. TOTAL FY 2023/24 EXPENSES & USES (I+J+K+L)	**$**	**11,421,364.73**
N. Estimated Deferred Revenue as of June 30, 2023 (H-M)	$	7,741,504.00

Part 2 of 4

BUDGETED PUBLIC TRANSIT REVENUES & EXPENSES FOR FISCAL YEAR 2024/25

I. FY 2024/25 NON-TDA BUDGETED RESOURCES & DEFERRED REVENUE

A. Carryover from prior fiscal year (Unexpended prior year transit cash receipts held in claimants treasury as of June 30, 2024-- From Part 1, line N)	$	7,741,504.00
B. Interest earnings through June 30, 2024	$	76,108.00
C. Federal Grants (Source/Amount)		
1. FTA Planning Assistance	$	-
2. FTA Operating Assistance	$	1,985,257.00
3. FTA Capital Assistance	$	1,588,935.69
4. Other (list) _CRRSSA/ARPA/CARES____	$	12,219.62
D. State Grants (Source/Amount):		
1. LCTOP - ZEB Replacement, ZEB Depot, Galleria Electric Charging Infrastructure	$	-
2. Solutions for Congested Corridors (SCCP) - PSGC I South Placer Transit	$	421,688.06
E. Local Non-TDA Cash Grants:		
1. PCAPCD - ZEB Depot		
2. SPRTA -		
F. Operating Revenues:		
1. Passenger Fares	$	682,324.47
2. Charters	$	-
3. Other (list) _Auxiliary Transportation Revenue___	$	-
G. Other Revenues		
1. Non-Transportation Revenue	$	180,083.00
2. Revenue Pending Receipt After Audit Completion	$	-
H. TOTAL FY 2024/25 CARRYOVER & NON-TDA BUDGETED RESOURCES (A+B+C+D+E+F+G)	**$**	**12,688,119.84**

I. TOTAL FY 2024/25 CARRYOVER & NON-TDA BUDGETED RESOURCES (From Line H)	**$**	**12,688,119.84**
II. FY 2024/25 PROJECTED EXPENSES & USES		
J. Personnel:		
1. Administrative Salaries and Wages	$	599,014.41
2. Operating Salaries and Wages	$	-
3. Other Salaries and Wages	$	-
4. Fringe Benefits	$	297,996.67
K. Services and Supplies:		
1. Professional Services	$	81,433.90
2. Maintenance Services	$	1,127,255.88
3. Other Services	$	(475.11)
4. Vehicle Materials & Supplies	$	741,845.33
5. Utilities	$	17,880.84
6. Insurance	$	122,022.00
7. Purchased Transit Services	$	4,041,747.00
8. Facility Services / System Repair & Maintenance	$	72,420.60
9. IT Services	$	131,011.00
10. Other Materials and Supplies	$	177,297.08
11. Indirect Costs & Other Costs Reimbursed	$	319,604.00
12. Miscellaneous, Cash Over/Short, Uncollectible, Other Fees	$	-
13. Interest	$	(33,531.60)
14. Leases & Rentals	$	-
L. Capital Assets (Itemize):		
1. Taylor Rd Commuter Bus Stop	$	414.49
2. Commuter Bus Replacement	$	2,773,405.90
3. On Board Bus Technology	$	88,572.39
4. Microtransit Vehicle and Charger Purchase	$	61,498.77
5. Zero Emission Bus Depot Project	$	268,713.56
6. Purchase of Eight Replacement Dial-A-Ride Buses	$	184,496.31
7. Roseville Transit Comprehensive Operational Analysis	$	85,064.72
8. South Placer County Express Bus Service - Capital	$	2,123,373.24
9. ZEB Depot Phase II	$	63,569.61
10. PW-AT Workforce Development	$	81,199.12
M. Other Uses:		
1. Operational & Capital Reserve	$	7,000,000.00
2. Other Capital Projects	$	20,823.73

N.	**TOTAL FY 2024/25 EXPENSES & USES (J+K+L+M)**	**$ 20,446,653.84**
O.	**Unfunded Balance (I - N)**	**$ (7,758,534.00)**

O.	**Unfunded Balance (I - N)**	**$ (7,758,534.00)**

III. FY 2024/25 TDA TRANSIT CLAIMS

P. FY 2024/25 LTF TRANSIT CLAIMS:		
1. LTF-Operations (PUC 99260a; Article 4)	$	4,752,907.00
2. LTF-Capital (PUC 99260a; Article 4)	$	1,307,186.00
3. LTF-Community Transit Services (PUC 99275; Article 4.5)	$	-
4. LTF-Contracted Transit Service (PUC 99400c: Article 8c)	$	-
5. LTF-Capital Reserve Contribution (CCR 6648)	$	-
6. LTF-Capital for contracted transit service (PUC 99400e; Article 8e)	$	-
7. TOTAL LTF CLAIM (P1+P2+P3+P4+P5)	**$**	**6,060,093.00**
Q. FY 2024/25 STAF CLAIMS:		
1. STAF-Operations (CCR 6730a)	$	1,468,986.00
2. STAF-Capital (CCR 6730b)	$	-
3. STAF-Community Transit Services (CCR 6730d) / CTSA	$	-
4. STAF-Contracted Service (CCR 6731b)	$	-
5. TOTAL STAF CLAIM (Q1+Q2+Q3+Q4)	$	1,468,986.00
R. FY 2024/25 SGR CLAIMS:		
1. SGR-Capital (CCR 6730b)	$	229,455.00
2. TOTAL SGR CLAIM (R1)	$	229,455.00
S. TOTAL 2024/25 TRANSIT CLAIMS (P6 + Q5 + R2)	**$**	**7,758,534.00**

Part 3 of 4

ESTIMATED STREETS AND ROADS TDA EXPENDITURES FOR FISCAL YEAR 2023/24

I. FY 2023/24 AVAILABLE TDA STREET AND ROAD RESOURCES		
A. Carryover from prior fiscal year (Actual Unexpended Prior Year TDA Streets And Roads Cash Receipts Held in Claimant's Treasury as of June 30, 2023. From TDA Fiscal Audits)	$	5,457,921.00
B. FY 2023/24 TDA Cash Receipts from LTF trust fund for streets and roads purposes (PUC 99400a).	$	6,765,847.00
C. Interest Earned on claimant TDA streets and roads cash balances through June 30, 2023.	$	(1,175.00)
D. Total FY 2023/24 Available TDA Street and Road Resources. (A+B+C)	$	12,222,593.00

II. FY 2023/24 TDA STREET AND ROAD EXPENDITURES		
E. Administration and Engineering	$	1,018,263.49
F. Maintenance	$	423,522.59
G. Construction	$	3,851,542.49
H. Transportation Planning Process (P.U.C. 99402)	$	225,000.00
I. Other	$	211,045.00
J. TOTAL FY 2023/24 EXPENDITURES (E+F+G+H+I)	$	5,729,373.57
K. Estimated Carryover of TDA Street and Road Revenues at June 30, 2024 (D-J)	**$**	**6,493,219.43**

Part 4 of 4

STREETS AND ROADS TDA BUDGET FOR FISCAL YEAR 2024/25

I. FY 2024/25 AVAILABLE TDA STREET AND ROAD RESOURCES		
A. Carryover as of June 30, 2024 (From Part 3, Line K.)	**$**	**6,493,219.43**
B. 2024/25 TDA Funds Available For Streets And Roads		
1. FY 2024/25 LTF Total Apportionment (From PCTPA)	$	10,865,437.00
2. FY 2024/25 LTF Transit Claim (From Part 2, Line P6)	$	6,060,093.00
3. Balance of 2024/25 LTF Apportionment (B1-B2)	$	4,805,344.00
4. FY 2024/25 LTF Apportionment To be Claimed for Streets and Roads Purposes Pursuant to PUC 99400a. (Can Not Exceed Line B3)	$	4,745,797.00
5. FY 2024/25 LTF Apportionment To be Claimed for Transportation Planning Purposes Pursuant to PUC 99402a.	$	59,547.00
C. FY 2024/25 Estimated Interest Earned on TDA Cash Balances through June 30, 2025.	$	86,123.00
D. Total Estimated FY 2024/25 Available TDA Resources. (A+B4+C)	$	11,384,686.43

II. FY 2024/25 ESTIMATED EXPENDITURES		
H. Administration and Engineering	$	1,026,220.58
I. Maintenance	$	355,746.58
J. Construction	$	7,077,681.50
K. Equipment	$	-
L. Transportation Planning Process (P.U.C. 99402)	$	59,547.00
M. Other- Indirect Costs	$	222,717.00
N. Capital Reserves	$	1,000,000.00
O. Total FY 2024/25 Estimated Expenditures (H+I+J+K+L+M+N)	$	9,741,912.66
P. Estimated Carryover as of June *30*, 2025 (D-N)	**$**	**1,642,773.77**

PLACER COUNTY TRANSPORTATION PLANNING AGENCY (PCTPA)

FINAL FINDINGS OF APPORTIONMENT FOR FY 2024/2025

LOCAL TRANSPORTATION FUND (LTF)

September 2024

		FY 2023/2024 Estimated Fund Balance Subtotal [1]	FY 2024/2025 Revenue Subtotal	FY 2024/2025 Apportionment Total
PLACER COUNTY LTF REVENUE ESTIMATE		$933,882	$32,109,843	**$32,945,558**
TRPA Revenue Estimate [2]	2.44923904%		$770,305	$770,305
TRPA LTF Fund Balance		$110,085		$110,085
TRPA TOTAL			$770,305	$880,390
County Auditor Administrative Costs			$264	$264
BALANCE AVAILABLE FOR APPORTIONMENT BY TRPA				**$880,126**
PCTPA Revenue Estimate	97.55076096%		$31,339,538	$31,339,538
PCTPA LTF Fund Balance		$823,797		$725,630
PCTPA TOTAL			$31,339,538	**$32,065,168**
County Auditor Administrative Costs			$8,736	$8,736
PCTPA Administrative and Planning Costs [3]			$475,000	$475,000
Pedestrian and Bicycle Allocation [4]		$16,476	$617,116.04	$633,592
Community Transit Service Article 4.5 Allocation [5]		$36,329	$1,360,741	$1,397,070
BALANCE AVAILABLE FOR APPORTIONMENT BY PCTPA		$770,992	$28,877,945	**$29,550,770**

Apportionment of FY 2024/2025 PCTPA LTF Revenue Estimate by Jurisdiction

Jurisdiction	Population January 1, 2024	Percent (%)	FY 2024/2025 Allocation Subtotal	FY 2023/2024 Carryover Apportionment[6]	Revenue Apportionment
PLACER COUNTY	101,964	25.30500819%	$7,282,725	$195,099	$7,477,825
AUBURN	13,218	3.28038914%	$944,089	$25,292	$969,380
COLFAX	1,988	0.49337370%	$141,992	$3,804	$145,796
LINCOLN	53,231	13.21065171%	$3,801,996	$101,853	$3,903,849
LOOMIS	6,601	1.63820916%	$471,473	$12,630	$484,103
ROCKLIN	71,609	17.77162853%	$5,114,635	$137,018	$5,251,653
ROSEVILLE	154,329	38.30073956%	$11,022,868	$295,295	$11,318,163
TOTAL	**402,940**	**100.00%**	**$28,779,778**	**$770,992**	**$29,550,770**

Apportionment of FY 2024/2025 PCTPA LTF Revenue Estimate Available to Claimant

Jurisdiction	Revenue Apportionment	Planning Contribution[7]	Available to Claimant[8]
PLACER COUNTY	$7,477,825	($299,113)	$7,178,712
AUBURN	$969,380	($38,775)	$930,605
COLFAX	$145,796	($5,832)	$139,964
LINCOLN	$3,903,849	($156,154)	$3,747,695
LOOMIS	$484,103	($19,364)	$464,739
ROCKLIN	$5,251,653	($210,066)	$5,041,587
ROSEVILLE	$11,318,163	($452,727)	$10,865,437
TOTAL	**$29,550,770**	**($1,182,031)**	**$28,368,739**

NOTES:

1) FY 2023/24 LTF balance based on August 1, 2024 Final LTF Fund Estimate provided by the Placer County Auditor
   LTF balance has been adjusted for claims owed to jurisdictions and online sales tax adjustment per HDL to occur during FY 2024/25.
2) Tahoe Regional Planning Agency receives funds proportional to its population within Placer County (see box below).
3) Apportioned per Section 7.1 PCTPA Rules & Bylaws for FY 2022/23 Final Overall Work Program and Budget, May 25, 2022.
4) Pedestrian and Bicycle Allocation is 2% of the remaining apportionment, per PCTPA Board direction.
5) Community Transit Service Article 4.5 allocation is up to 5% of the remaining apportionment, per PCTPA Board direction.
   FY 2024/25 Article 4.5 allocation is set at 4.5%.
6) FY 2023/24 carryover apportionment (see next page) uses May 2024 DOF population estimates.
7) PCTPA receives 4% of apportionment for regional planning purposes and implementation of federal planning requirements.
8) Assumes 0% growth in revenue over FY 2024/25 per LAO sales tax projections.

January 1, 2024 DOF Population Estimates[1]		
TRPA Population[2]	9,904	2.39896910%
PCTPA Population	402,940	97.60103090%
TOTAL	412,844	100.00000000%

Sources:

1. Table E-1: City/County Population Estimates January 1, 2023 to January 1, 2024, DOF, released May 2, 2024.
2. Western Slope and Tahoe Basin for Placer County as of January 1, 2024, DOF, June 28, 2024.

Printed:8/29/2024

Calculation of FY 2024/2025 PCTPA LTF Carryover

Using 2024 Population - Western Slope

Amount of FY 2023/2024 Carryover: **$770,992**

POPULATION				
JURISDICTION	January 1, 2024[1]	PERCENT	FY 2024/2025 CARRYOVER ALLOCATION	TOTAL CARRYOVER ALLOCATION
PLACER COUNTY	101,964	25.31%	$195,099	$195,099
AUBURN	13,218	3.28%	$25,292	$25,292
COLFAX	1,988	0.49%	$3,804	$3,804
LINCOLN	53,231	13.21%	$101,853	$101,853
LOOMIS	6,601	1.64%	$12,630	$12,630
ROCKLIN	71,609	17.77%	$137,018	$137,018
ROSEVILLE	154,329	38.30%	$295,295	$295,295
TOTAL	**402,940**	**100.00%**	**$770,992**	**$770,992**

Sources:

1. Table E-1: City/County Population Estimates January 1, 2023 to January 1, 2024, DOF, May 2, 2024.

2. FY 2023/24 LTF balance based on August 1, 2024 Final LTF Fund Estimate provided by the Placer County Auditor (adjusted for anticipated online sales tax adjustments).

PLACER COUNTY TRANSPORTATION PLANNING AGENCY
FY 2024/25 STATE TRANSIT ASSISTANCE (STA) FUND FINAL ALLOCATION ESTIMATE
(EXCLUDING TAHOE BASIN)
September 2024

PUC 99313 Allocation	$3,755,942
PUC 99314 Allocation	$534,814
Total STA Allocation[(1)]	$4,290,756
Less 4.5 Percent Allocation of PUC 99313 to WPCTSA[(2)]	$169,017
Total STA Allocation Available to Jurisdictions	$4,121,739

FY 2024/2025 Jurisdiction PUC Section 99313 STA Fund Allocation

Jurisdiction	January 2024 Population[(3)]	PUC 99313 Population Percentage	PUC 99313 Population Allocation
Placer County	101,964	25.31%	$907,672
Auburn	13,218	3.28%	$117,665
Colfax	1,988	0.49%	$17,697
Lincoln	53,231	13.21%	$473,856
Loomis	6,601	1.64%	$58,761
Rocklin	71,609	17.77%	$637,455
Roseville	154,329	38.30%	$1,373,819
TOTAL	402,940	100.00%	$3,586,925

Notes: (1) 2024/2025 State Transit Assistance Allocation Final Estimate, California State Controller Division of Accounting and Reporting, August 1, 2024.
(2) 4.5% of unencumbered PUC 99313 Allocation is allocated to WPCTSA.
(3) Table E-1: City/County Population Estimates January 1, 2023 to January 1, 2024, DOF, released May 2, 2024.
PUC = Public Utilities Code

FY 2023/2024 Jurisdiction PUC 99314 STA Fund Allocation

Jurisdiction	PUC 99314 Fare Revenue Basis[(4)]	PUC 99314 Fare Revenue Percentage	PUC 99314 Fare Revenue Allocation
Placer County	$5,410,141	81.9%	$437,879
Auburn	$21,830	0.3%	$1,767
Colfax	$0	0.0%	$0
Lincoln	$0	0.0%	$0
Loomis	$0	0.0%	$0
Rocklin	$0	0.0%	$0
Roseville	$1,175,827	17.8%	$95,168
TOTAL	$6,607,798	100.0%	$534,814

PUC Section 99313 + 99314

Total Jurisdiction Allocation
$1,345,551
$119,432
$17,697
$473,856
$58,761
$637,455
$1,468,986
$4,121,739

Notes: (4) 2024/2025 State Transit Assistance Allocation Preliminary Estimate, California State Controller Division of Accounting and Reporting, February 1, 2024.

PLACER COUNTY TRANSPORTATION PLANNING AGENCY
FY 2024/2025 STATE OF GOOD REPAIR (SGR) FINAL ALLOCATION ESTIMATE
(EXCLUDING TAHOE BASIN)
September 2024

PUC 99313 Allocation	$561,914
PUC 99314.8 Allocation	$80,012
Total SGR Allocation[1]	$641,926
Less Percent Allocation of PUC 99313 to WPCTSA (5% max)	$0
Total SGR Allocation Available to Jurisdictions	$641,926

FY 2024/2025 Jurisdiction PUC Section 99313 SGR Fund Allocation

Jurisdiction	January 2024 Population[2]	PUC 99313 Population Percentage	PUC 99313 Population Allocation	Reallocation to Transit Operator[3]	PUC 99313 Total Allocation
Placer County	101,964	25.31%	$142,192	$186,071	$328,264
Auburn	13,218	3.28%	$18,433	$0	$18,433
Colfax	1,988	0.49%	$2,772	($2,772)	$0
Lincoln	53,231	13.21%	$74,233	($74,233)	$0
Loomis	6,601	1.64%	$9,205	($9,205)	$0
Rocklin	71,609	17.77%	$99,861	($99,861)	$0
Roseville	154,329	38.30%	$215,217	$0	$215,217
TOTAL	402,940	100.00%	$561,914	($0)	$561,914

Notes: (1) FY 2024/2025 State of Good Repair Final Allocation Estimate, California State Controller Division of Accounting and Reporting, February 1, 2024
(2) Table E-1: City/County Population Estimates January 1, 2023 to January 1, 2024, DOF, released May 2, 2024.
(3) Placer County Transit will apply the equivalent SGR PUC 99313 shares from the Cities of Colfax, Lincoln, Rocklin, and the Town of Loomis to preventive maintenance.

FY 2024/2025 Jurisdiction PUC Section 99314 SGR Fund Allocation

Jurisdiction	PUC 99314 Fare Revenue Basis[4]	PUC 99314 Fare Revenue Percentage	PUC 99314 Fare Revenue Allocation	Total Jurisdiction Allocation
Placer County	$5,410,141	81.9%	$65,510	**$393,774**
Auburn	$21,830	0.3%	$264	**$18,697**
Colfax	$0	0.0%	$0	**$0**
Lincoln	$0	0.0%	$0	**$0**
Loomis	$0	0.0%	$0	**$0**
Rocklin	$0	0.0%	$0	**$0**
Roseville	$1,175,827	17.8%	$14,238	**$229,455**
TOTAL	$6,607,798	100.0%	$80,012	**$641,926**

Notes: (4) FY 2024/2025 State of Good Repair Final Allocation Estimate, California State Controller Division of Accounting and Reporting, August 1, 2024.

FY 2024/2025 SGR Project Summary

Jurisdiction	Project Title	FY 2024/25 Allocation Amount
Placer County	Maintenance and Replacement of 35' Bus	**$393,774**
Auburn	Ford E-Transit Van Purchase	**$18,697**
Roseville	Bus Stop Improvement and Replacement Program	**$229,455**
	FY 2024/25 Total	**$641,926**

City Council Communication

Meeting Date: 3/4/2026
Item #: VII.9
File #: 0709
Item ID: 2026-92

Title:	Reservation of Affordable Housing Funds for Development of the Pleasant Grove Apartments Phase II
Contact:	Kristine Faelz 916-774-5451 kpfaelz@roseville.ca.us

SUMMARY

Staff recommends approval to reserve $3,000,000 in affordable housing funds for an affordable housing project to be developed in Roseville. The request is to reserve $1,500,000 from the City Local Housing Trust Fund and $1,500,000 from the State Local Housing Trust Fund for construction of Mercy Housing's affordable housing project, Pleasant Grove Apartments Phase II. The City's Local Housing Trust Fund receives funding from developer in-lieu fees and payoffs from developer subsidized affordable purchase loans. The Housing Division has funding available in the Local Housing Trust Fund (LHTF), which will be used to match available state-awarded LHTFs. No General Fund resources will be used.

RECOMMENDATION

Staff recommends that the City Council adopt a resolution to reserve $1,500,000 from the City of Roseville Local Housing Trust Fund and $1,500,000 from the State Local Housing Trust Fund, for a total reservation of $3,000,000, toward the construction of Mercy Housing's affordable housing project, Pleasant Grove Apartments Phase II.

BACKGROUND

The Roseville Housing Division was awarded Local Housing Trust Fund (LHTF) Program funds by the California Department of Housing and Community Development (HCD) in the 2021 and 2022 funding rounds. This funding provides matching grants to Local Housing Trust Funds established by cities and counties, Native American Tribes and incorporated 501 (c)(3) non-profit organizations. The objective of the LHTF grant is to expand funding sources in order to increase the supply of affordable housing. Eligible activities include construction loans and/or permanent financing loans to pay for predevelopment costs, acquisition costs, and other costs associated with the development or rehabilitation of affordable rental housing projects, or emergency shelters, transitional housing, permanent supportive housing, and affordable homebuyer/homeowner projects.

A portion of the funds awarded in the 2021 and 2022 rounds remains uncommitted and is available for eligible affordable housing activities. Accordingly, the Roseville Housing Division released a Notice of Funding Availability (NOFA) on November 7, 2025, and invited applications from qualified affordable housing developers and project sponsors. The NOFA made available $3 million in capital funding from City of Roseville and State LHTF sources, with the Housing Division providing the required 1:1 match from funds collected through in-lieu fees and affordable housing loan repayments. The Housing Division received one response to the NOFA. Mercy Housing requested $3 million for their 49-unit Pleasant Grove Apartments Phase II project. The proposed funding reservation demonstrates a commitment of local funds and strengthens the project's competitiveness for tax credit financing, improving its ability to leverage additional state and federal affordable housing resources.

Subject to completion of full project underwriting and City Council approval, Housing Division staff will return to Council with the required loan documents, regulatory agreement, and related development documents for review and consideration at a future meeting.

FISCAL IMPACT

The City's Local Housing Trust Fund is funded through developer in-lieu fees and repayments of developer-subsidized affordable purchase loans. The Housing Division has $1.5 million available in Local Housing Trust Fund resources, in addition to $1.5 million in state funds, which it intends to leverage for this project. No General Fund resources will be used.

ENVIRONMENTAL REVIEW

The California Environmental Quality Act (CEQA) does not apply to activities that will not result in a direct or reasonably foreseeable indirect physical change in the environment, or is otherwise not considered a project as defined by CEQA Statute §21065 and CEQA State Guidelines §15060(c)(3) and §15378. The request for reservation of funds to develop affordable housing meets the above criteria and is not subject to CEQA. No additional environmental review is required.

CITY COUNCIL STRATEGIC PLAN/OVERARCHING GOALS

1. Ensure a safe and healthy community
3. Enhance economic vitality

Respectfully Submitted,
Kristine Faelz, Housing Analyst

Melissa Anguiano, Economic Development Director

ATTACHMENTS:

1. Resolution 26-052

REVIEWERS:

Kristine Faelz, Economic Development Department - Housing	Created/Initiated - 2/4/2026
Trisha Isom, Economic Development Department - Housing	Approved - 2/5/2026
Melissa Anguiano, Economic Development Department	Approved - 2/5/2026
Kelly Aye, City Attorney Department	Approved - 2/18/2026
Katrina Six, City Clerk Department	Approved - 2/18/2026
Ryan DeVore, City Manager Department - Assistant City Manager	Approved - 2/19/2026
Dennis Kauffman, City Manager Department - Assistant City Manager	Approved - 2/19/2026
Michelle Sheidenberger, City Attorney Department	Approved - 2/19/2026
Dominick Casey, City Clerk Department	Approved - 2/23/2026
Katrina Six, City Clerk Department	Final Approval - 2/23/2026

RESOLUTION NO. 26-052

APPROVING THE RESERVATION OF $3,000,000 IN AFFORDABLE HOUSING FUNDS FOR THE DEVELOPMENT OF THE PLEASANT GROVE APARTMENTS PHASE II

WHEREAS, the Roseville Housing Division was awarded Local Housing Trust Fund (LHTF) Program funds by the California Department of Housing and Community Development (HCD) in the 2021 and 2022 funding rounds; and

WHEREAS, a portion of the funds awarded in the 2021 and 2022 rounds remains uncommitted and is available for eligible affordable housing activities; and

WHEREAS, the Roseville Housing Division released a Notice of Funding Availability (NOFA) on November 7, 2025, and invited applications from qualified affordable housing developers and project sponsors; and

WHEREAS, the NOFA made available $3 million in capital funding from City of Roseville and State LHTF sources, with the Housing Division providing the required 1:1 match from funds collected through in-lieu fees and affordable housing loan repayments; and

WHEREAS, the Housing Division received one response to the NOFA; and

WHEREAS, Mercy Housing requested $3 million for their 49-unit Pleasant Grove Apartments Phase II project; and

WHEREAS, the proposed funding reservation demonstrates a commitment of local funds and strengthens the project's competitiveness for tax credit financing, improving its ability to leverage additional state and federal affordable housing resources.

NOW, THEREFORE, BE IT RESOLVED, by the Council of the City, that it hereby approves reserving $1,500,000 from the City of Roseville Local Housing Trust Fund and $1,500,000 from the State Local Housing Trust Fund toward the construction of the Pleasant Grove Apartments Phase II by Mercy Housing.

PASSED AND ADOPTED by the Council of the City of Roseville this ___ day of _____, 20__, by the following vote on roll call:

AYES COUNCILMEMBERS:

NOES COUNCILMEMBERS:

ABSENT COUNCILMEMBERS:

_____
MAYOR

ATTEST:

_____
City Clerk

City Council Communication

Meeting Date: 3/4/2026
Item #: VII.10
File #: 0800-03
Item ID: 2026-104

Title:	Western Systems Power Pool Agreement Collateral Annex and Cover Sheet
Contact:	Patrick Zanardelli 916-774-5673 pzanardelli@roseville.ca.us

SUMMARY

Staff recommends approval of the Western Systems Power Pool (WSPP) Collateral Annex, including the Cover Sheet Elections, with NRG Business Marketing LLC (NRG) and Triolith Energy Fund, LP (Triolith). The documents supplement the WSPP Agreement previously executed by the City and establish industry-standard credit and collateral provisions that would apply to any future wholesale physical power transactions with NRG and Triolith under the WSPP framework. There is no cost associated with the execution of these documents.

RECOMMENDATION

Staff recommends that the City Council adopt resolutions authorizing the City Manager to execute the Western Systems Power Pool Collateral Annex and Cover Sheet Elections with NRG Business Marketing LLC and Triolith Energy Fund, LP.

BACKGROUND

The City Council approved updated Electric Utility Risk Management Policies in May 2025. These policies require Roseville Electric Utility to manage the financial risks associated with providing electricity by limiting cost exposure through the procurement of fixed-price electricity and natural gas over a three-year planning horizon.

Roseville Electric Utility has historically used the Western Systems Power Pool (WSPP) Agreement as its standard contractual framework for physical power transactions. The Collateral Annex and Cover Sheet Elections are standardized supplements to that agreement, used to define bilateral credit and collateral obligations with individual counterparties. These documents provide enhanced credit protections to the City by requiring the posting of collateral when exposure thresholds are exceeded or credit conditions change.

While both NRG Business Marketing LLC (NRG) and Triolith Energy Fund, LP (Triolith) are WSPP signatories, they have not previously transacted bilaterally under the WSPP framework. Executing the Collateral Annex and Cover Sheet Elections with NRG and Triolith does not authorize any transactions but ensures credit protections are in place should Roseville elect to transact with NRG or Triolith in the future.

Any such transactions will remain subject to the City's Energy Trading Authority Policy (Resolution No. 25-149), approved by City Council on May 21, 2025.

FISCAL IMPACT

There is no fiscal impact associated with the execution of the WSPP Collateral Annex and Cover Sheet Elections with NRG Business Marketing LLC and Triolith Energy Fund, LP, as these documents serve as

enabling agreements.

ENVIRONMENTAL REVIEW

The California Environmental Quality Act (CEQA) does not apply to activities that will not result in a direct or reasonably foreseeable indirect physical change in the environment, or is otherwise not considered a project as defined by CEQA Statute §21065 and CEQA State Guidelines §15060(c)(3) and §15378. Entering into enabling agreements with NRG Business Marketing LLC and Triolith Energy Fund, LP is not considered a "project" as defined by CEQA and consequently no CEQA action is required.

CITY COUNCIL STRATEGIC PLAN/OVERARCHING GOALS

2. Remain fiscally responsible in a changing world

Respectfully Submitted,
Patrick Zanardelli, Electric Business Analyst

Daniel Beans, Electric Utility Director

ATTACHMENTS:

1. Resolution 26-049
2. NRG Collateral Annex
3. NRG Collateral Annex Cover Sheet
4. Resolution 26-050
5. Triolith Collateral Annex
6. Triolith Collateral Annex Cover Sheet

REVIEWERS:

Patrick Zanardelli, Electric Department - Customer & Government Relations and Financial & Administrative	Created/Initiated - 2/9/2026
Joanna Cucchi, Electric Department - Financial & Administrative	Approved - 2/12/2026
Shawn Matchim, Electric Department - All	Approved - 2/13/2026
Daniel Beans, Electric Department - All	Approved - 2/13/2026
Kelly Aye, City Attorney Department	Approved - 2/18/2026
Katrina Six, City Clerk Department	Approved - 2/18/2026
Ryan DeVore, City Manager Department - Assistant City Manager	Approved - 2/19/2026
Dennis Kauffman, City Manager Department - Assistant City Manager	Approved - 2/19/2026
Michelle Sheidenberger, City Attorney Department	Approved - 2/19/2026
Dominick Casey, City Manager Department - City Manager	Approved - 2/19/2026
Katrina Six, City Clerk Department	Final Approval - 2/19/2026

RESOLUTION NO. 26-049

APPROVING THE WESTERN SYSTEMS POWER POOL COLLATERAL ANNEX AND COVER SHEET ELECTIONS, BY AND BETWEEN THE CITY OF ROSEVILLE AND NRG BUSINESS MARKETING LLC, AND AUTHORIZING THE CITY MANAGER TO EXECUTE THEM ON BEHALF OF THE CITY OF ROSEVILLE

WHEREAS, Roseville Electric Utility has historically used the Western Systems Power Pool (WSPP) Agreement as its standard contractual framework for physical power transactions; and

WHEREAS, the Collateral Annex and Cover Sheet Elections are standardized supplements to that agreement, used to define bilateral credit and collateral obligations with individual counterparties; and

WHEREAS, the Collateral Annex and Cover Sheet Elections to the WSPP Agreement, by and between the City of Roseville and NRG Business Marketing LLC, have been reviewed by the City Council.

NOW, THEREFORE, BE IT RESOLVED by the Council of the City of Roseville that said Western Systems Power Pool Collateral Annex and Cover Sheet Elections are hereby approved and that the City Manager is authorized to execute them on behalf of the City of Roseville.

PASSED AND ADOPTED by the Council of the City of Roseville this ___ day of _____, 2026, by the following vote on roll call:

AYES COUNCILMEMBERS:

NOES COUNCILMEMBERS:

ABSENT COUNCILMEMBERS:

_____
MAYOR

ATTEST:

_____
City Clerk

COLLATERAL ANNEX
to the
WSPP AGREEMENT

This Collateral Annex to the WSPP Agreement together with the Cover Sheet Elections (collectively, the "Collateral Annex"), dated January 16, 2026, between City of Roseville ("Party A") and NRG Business Marketing LLC ("Party B") (each a "Party" and, collectively, the "Parties"), is applicable to all transactions between the Parties conducted under the WSPP Agreement, including any amendments and annexes thereto agreed between the Parties (collectively, the "WSPP Agreement").

The Obligations of each Party to the other Party under the WSPP Agreement shall be secured in accordance with the provisions of this Collateral Annex, which sets forth the conditions under which a Party will be required to deliver Performance Assurance and the conditions under which a Party will be required to release and return Performance Assurance. To the extent there are any inconsistencies between the terms and conditions of the WSPP Agreement and this Collateral Annex, this Collateral Annex shall prevail. To the extent there are any inconsistencies between the terms and conditions of this Collateral Annex, excluding the Cover Sheet Elections, and the Cover Sheet Elections, the Cover Sheet Elections shall prevail.

1. Definitions.

For purposes of this Collateral Annex, the following terms have the meanings set forth below or in the provisions referred to below:

"Beneficiary Party" means, at any time, the Party entitled to receive, or that has received and is the beneficiary of, Performance Assurance provided by, or on behalf of, the Posting Party.

"Business Day(s)" has the meaning stated in section 4.1b of the WSPP Agreement.

"Cash" means U.S. dollars held by, or on behalf of, a Party as Performance Assurance and which shall be, for purposes of obtaining and perfecting a security interest hereunder, treated as "money" as defined in the UCC.

"Custodial Bank" means a Qualified Institution that has executed a Deposit Account Agreement.

"Collateral Annex" has the meaning stated in the introductory paragraph of this Collateral Annex.

"Collateral Threshold" means, with respect to a Party, the collateral threshold, if any, set forth in Part I of the Cover Sheet Elections for that Party, or if no amount is set forth for such Party, such amount shall be zero (0).

"Credit Rating" means, with respect to an entity other than a Qualified Institution, but including, as applicable, a Party or its Guarantor, as the case may be, on any date of determination: (a) the rating then assigned to such entity's (i) unsecured debt (such debt not supported by third-party credit enhancement) or (ii) if such rating in clause (i) is unavailable, its corporate credit rating, in each case as issued by Standard & Poor's ("S&P"), Moody's Investors

Service ("Moody's"), or Fitch, Inc. ("Fitch") or other rating agency or agencies to which the Parties may agree in writing, or (b) other such rating to which the Parties may agree in writing, and as further defined or described by the Parties in the Cover Sheet Elections. With respect to a Qualified Institution, "Credit Rating" refers to the ratings issued to the applicable commercial bank or trust company by S&P or Moody's. "S&P," "Moody's" and "Fitch" each includes its successors.

"Collateral Requirement" has the meaning stated in Section 4(c) of this Collateral Annex.

"Dealer" has the meaning stated in Section 4.2b of the WSPP Agreement except that no Party or any parent, subsidiary, or other affiliate of a Party shall be a Dealer for purposes of this Collateral Annex.

"Demand Notice" has the meaning given in Section 4(a) hereof.

"Deposit Account" means a demand, time, savings, passbook or similar account maintained with a Qualified Institution and subject to a Deposit Account Agreement, which Deposit Account shall, for purposes of obtaining and perfecting a security interest hereunder, be a "deposit account" as defined in UCC § 9-102.

"Deposit Account Agreement" is an agreement, executed by the Parties and a Custodial Bank with which the Deposit Account is or will be maintained under this Agreement, that provides the Beneficiary Party with control of the Deposit Account within the meaning of UCC § 9-104.

"Defaulting Party" has the meaning stated in Section 22.1 of the WSPP Agreement.

"Downgrade Event" has the meaning stated in Section 6(a)(iv) of this Collateral Annex.

"Downgraded Party" has the meaning stated in Section 6(a)(iv) of this Collateral Annex.

"Early Termination" means a termination of one or more transactions in accordance with Section 22.2 of the WSPP Agreement due to an Event of Default.

"Eligible Beneficiary Party" has the meaning stated in Section 6(a)(i) of this Collateral Annex.

"Event of Default" has the meaning stated in Section 22.1 of the WSPP Agreement as modified by Section 3 of this Collateral Annex.

"Guarantor" has the meaning stated in Section 4.7e of the WSPP Agreement and is the entity, if any, identified in Part I of the Cover Sheet Elections.

"Interest Rate" has the meaning stated in Part VI of the Cover Sheet Elections.

"LC Issuer" means (a) an entity having a capital surplus of at least one billion United States dollars ($1,000,000,000.00) and having a Credit Rating of at least (i) "A-" by S&P and "A3" by Moody's, if such entity is rated by S&P and Moody's, or (ii) "A-" by S&P or "A3" by Moody's, if such entity is rated by either S&P or Moody's, but not both, or (b) any other entity to which the Parties agree in the Cover Sheet Elections or otherwise in writing, provided, that the

Parties may agree to another definition of LC Issuer in Part VII of the Cover Sheet Elections or otherwise in writing, which other definition shall supercede the foregoing.

"Letter of Credit" means an irrevocable, non-transferable, standby letter of credit, issued by a LC Issuer in a form consistent with the Parties' agreements stated in Part VII of the Cover Sheet Elections and which letter of credit is otherwise reasonably acceptable to the Beneficiary Party.

"Letter of Credit Default" means with respect to an outstanding Letter of Credit and prior to the time such Letter of Credit is required to be canceled or returned to a Party in accordance with the terms of this Collateral Annex, the occurrence of any of the following events: (a) the issuer of the Letter of Credit has failed to satisfy the criteria of a LC Issuer under this Collateral Annex, the Cover Sheet Elections, or other agreements of the Parties, as applicable; (b) the LC Issuer has failed to comply with or perform its obligations under such Letter of Credit, including, but not limited to a failure to comply with a request to draw thereon in accordance with its terms; (c) the LC Issuer has disaffirmed, disclaimed, repudiated or rejected, in whole or in part, or challenged the validity of, such Letter of Credit; (d) such Letter of Credit has expired or terminated, or has failed or ceased to be in full force and effect at any time during the term of any transaction under the WSPP Agreement for which Performance Assurance is required to be kept in full force and effect hereunder, in any such case without replacement within three (3) Business Days following the date such Letter of Credit expired, terminated or failed or ceased to be in full force and effect; (e) the LC Issuer has initiated or become subject to, or any other party has initiated against LC Issuer (i) a bankruptcy, reorganization, moratorium, liquidation or similar insolvency proceeding under federal or state law, (ii) a similar proceeding for relief under any federal or state bankruptcy or insolvency law affecting creditor's rights, or (iii) a proceeding to liquidate or wind-up the business or affairs of the LC Issuer; (f) the LC Issuer makes an assignment for the benefit of creditors; or (g) the LC Issuer admits in writing its inability to pay its debts generally as they become due.

"Material Adverse Change" has the meaning stated, for the applicable Party, in Part II of the Cover Sheet Elections.

"Minimum Transfer Amount" means, with respect to a Party, the amount set forth in Part IV of the Cover Sheet Elections for such Party, or if no amount is filled in for such Party, such amount shall be zero (0).

"Non-Performing Party" has the meaning stated in Section 21.3 of the WSPP Agreement.

"Obligations" means, with respect to a Posting Party (a) all debts, liabilities and amounts due or that may become due from the Posting Party to the Beneficiary Party pursuant to (i) the WSPP Agreement, (ii) all outstanding Confirmation Agreements between the Parties under the WSPP Agreement, (iii) this Collateral Annex, (iv) any Security Agreement and (v) any other documents, instruments or agreements executed in connection therewith; and (b) all amounts owed under any modifications, renewals or extensions of the foregoing.

"Party" and "Parties" have the respective meanings stated in the introductory paragraph of this Collateral Annex.

"Performance Assurance" means collateral in the form of (i) Cash (whether posted directly with a Beneficiary Party or the Custodial Bank in a Deposit Account, (ii) a Letter of

Credit, or (iii) other security in form and subject to terms and conditions that are acceptable to the Beneficiary Party in its sole and absolute discretion. Interest payments on Cash held by a Beneficiary Party will constitute Performance Assurance in the form of Cash. Interest payments on Cash deposited into or otherwise held in a Deposit Account with a Custodial Bank will constitute a part of the Deposit Account held as Performance Assurance. For all purposes hereunder, Performance Assurance in the form of Cash is a margin payment within the meaning of the Bankruptcy Code, 11 U.S.C. § 101 et seq., including but not limited to sections 101(38), 362(b)(6), 546(e), 548(d), and 556 thereof.

"Posting Deadline" has the meaning given in Part VI of the Cover Sheet Elections.

"Posting Party" means, at any time, the Party required to post, or that has posted, Performance Assurance to, or for the benefit of, the Beneficiary Party.

"Potential Event of Default" means an event which, (a) with the giving of notice required under Section 22.1 of the WSPP Agreement, if any is required, and (b) the failure to remedy or cure under Section 22.1 of the WSPP Agreement, if remedy or cure is permitted, or both (a) and (b), would be an Event of Default.

"Qualified Institution" means (a) a commercial bank or trust company organized under the laws of the United States or a political subdivision thereof having a capital surplus of at least one billion United States dollars ($1,000,000,000.00) and having a Credit Rating of at least (i) "A-" by S&P and "A3" by Moody's, if such entity is rated by S&P and Moody's or (ii) "A-" by S&P or "A3" by Moody's, if such entity is rated by either S&P or Moody's, but not both, or (b) any other commercial bank or trust company, or other entity, to which the Parties agree in writing.

"Reduction Deadline" has the meaning given in Part VI of the Cover Sheet Elections.

"Replacement Letter of Credit" has the meaning given in Section 6(c) hereof.

"Replacement Performance Assurance" has the meaning given in Section 6(c) hereof.

"Rounding Amount" means, with respect to a Party, the amount, set forth in the Cover Sheet Elections for such Party, or if no amount is filled in for such Party, such amount shall be zero (0).

"Security Agreement" means a Security Agreement, which may be in the form attached hereto, applicable to Performance Assurance in a form other than Cash or a Letter of Credit.

"Termination Date" means the date on which the Beneficiary Party shall have received full and final payment of all of the Obligations.

"Termination Payment" means, for purposes of this Collateral Annex, the Termination Payment calculated under Section 22.3 of the WSPP Agreement.

"UCC" means the Uniform Commercial Code as in effect from time to time in the State of Utah, without regard to the conflicts of laws rules thereof, except to the extent that the perfection, the effect of perfection or nonperfection and the priority of the security interest granted hereunder, or remedies hereunder, are governed by the law of any jurisdiction other than the State of Utah, the term UCC shall mean the Uniform Commercial Code of such other jurisdiction as necessary to give complete effect to this Collateral Annex.

"WSPP Agreement" has the meaning stated in the introductory paragraph of this Collateral Annex.

2. Encumbrance; Grant of Security Interest.

(a) As security for the prompt and complete payment and performance when due of a Party's Obligations now existing or hereafter arising, each Party hereby pledges, assigns, conveys and transfers to the other Party, and hereby grants to the other Party, a present and continuing security interest in and to, and a general first lien upon and right of set off against, all Performance Assurance which has been or may in the future be transferred to, or received by, the other Party or a Custodial Bank, for the benefit of such other Party, and all interest and other proceeds from time to time received or receivable in respect of, or in exchange for, any or all of the foregoing. Each Party agrees to take such action as the other Party reasonably requests in order to create and perfect the other Party's continuing security interest in, lien on, and right of setoff against, such Performance Assurance.

(b) The security interest created hereunder shall (i) remain in full force and effect until the security interest granted hereby is terminated in accordance with the second sentence of this Section 2(b), (ii) be binding upon the Posting Party, its successors and assigns and (iii) inure to the benefit of the Beneficiary Party and its successors, transferees and assigns. On the Termination Date, the security interest granted hereunder shall terminate and all rights to the Performance Assurance shall revert to the Posting Party. Upon such termination, the Beneficiary Party shall return all Performance Assurance in its possession or otherwise under its control to the Posting Party pursuant to Section 5(b) of this Collateral Annex and, at the Posting Party's expense, execute and deliver to the Posting Party such documents as the Posting Party shall reasonably request to evidence termination of the security interest.

(c) The security interest created hereunder is in addition to, and not in lieu of, any and all remedies that may be available under the WSPP Agreement.

(d) In the event a Party claims in any judicial proceeding that the grant set forth in Section 2(a) of this Collateral Annex is ineffective and fails to prevail on the claim, then that Party shall pay the other Party's reasonable attorneys fees incurred in defending against the claim.

3. Additional Events of Default.

The following event is added as an additional Event of Default under Section 22.1 of the WSPP Agreement and is incorporated therein for all purposes under this Collateral Annex:

(f) A Party fails to establish, maintain, transfer or extend Performance Assurance, or return Excess Performance Assurance, in any such case when required pursuant to the Parties' Collateral Annex.

4. Collateral Requirement.

(a) From time to time, on any Business Day prior to 1 p.m. New York time (but no more than once daily), the Beneficiary Party may demand by notice (each a "Demand Notice") that the Posting Party transfer Performance Assurance to or for the benefit of the Beneficiary Party, in an amount no less than the Collateral Requirement, provided that both conditions (i) and (ii) of this Section 4(a) are satisfied.

(i) No Event of Default has occurred and is continuing where the Beneficiary Party is the Defaulting Party and no Potential Event of Default exists where the Beneficiary Party is the potentially Defaulting Party;

(ii) No Early Termination has occurred or been designated with respect to such Beneficiary Party.

(b) After receiving a Demand Notice from the Beneficiary Party pursuant to Section 4(a) of this Collateral Annex, the Posting Party shall, by the Posting Deadline, transfer, or cause to be transferred to the Beneficiary Party or a Custodial Bank, as the case may be, Performance Assurance to, or for the benefit of, the Beneficiary Party, in an amount no less than the Collateral Requirement as defined in Section 4(c) of this Collateral Annex, provided, however, that a Posting Party shall not have an obligation to transfer Performance Assurance until the Collateral Requirement exceeds the Minimum Transfer Amount, at which time the Posting Party shall transfer the entire amount of the Collateral Requirement to the Beneficiary Party, and provided further, that if under this Collateral Annex each Party has an obligation to maintain Performance Assurance with respect to the other Party, the Parties' obligations to transfer Performance Assurance hereunder, including obligations to return Excess Performance Assurance under Section 5 of this Collateral Annex, at any time shall be determined on a net basis, and the Party with a net positive transfer obligation shall transfer Performance Assurance under this Section 4 in such amount.

(c) The "Collateral Requirement" is the amount calculated, as of the date of the Demand Notice, rounded up to the nearest integral multiple of the Rounding Amount, which is equal to *(x)* less *(y)*, but no less than zero, where:

(x) is

the Termination Payment, if any, that would be owed to the Beneficiary Party if the Posting Party were the Defaulting Party under Section 22.1 of the WSPP Agreement, plus

the damages, if any, solely under Section 21.3 of the WSPP Agreement that would be owed to the Beneficiary Party if the Posting Party were the Non-Performing Party, plus

any further and additional amounts due for rendered performance by the Beneficiary Party to the Posting Party under any WSPP Agreement transactions, whether or not invoiced or due, and

(y) is

the amount of Performance Assurance previously provided by or otherwise credited to the Posting Party for the benefit of the Beneficiary Party and not released as of the time the Beneficiary Party made the demand, plus

the Collateral Threshold applicable to the Posting Party.

(d) Any Letter of Credit shall be delivered to such address as the Beneficiary Party shall specify and any such demand made by the Beneficiary Party under this Section 4 shall specify account information for the account to which Performance Assurance in the form of Cash shall be delivered.

5. Reduction, Return, and Substitution of Performance Assurance.

(a) Reduction of Performance Assurance. From time to time, on any Business Day prior to 1 p.m. New York time (but no more than weekly with respect to Letters of Credit and daily with respect to Cash or a Deposit Account with the Custodial Bank), a Posting Party may demand that the Beneficiary Party reduce Performance Assurance in an amount equal to the Excess Performance Assurance as defined in this Section, provided, that the Posting Party shall not have any right to demand such reduction if on or prior to such Business Day, an Event of Default has occurred and is continuing where the Posting Party is the Defaulting Party, a Potential Event of Default exists where the Posting Party is the potentially Defaulting Party, or an Early Termination has occurred or been designated with respect to such Posting Party for which the Posting Party has not satisfied its Obligations. The Beneficiary Party shall comply with the demand by transferring, or causing the transfer of, Cash to the Posting Party or reducing the amount(s) of outstanding Letter(s) of Credit the Posting Party previously posted, provided, however, that a Beneficiary Party shall not have an obligation to transfer or cause the transfer of Excess Performance Assurance until the Excess Performance Assurance exceeds the Minimum Transfer Amount, at which time the Posting Party shall transfer the entire amount of the Excess Performance Assurance to the Posting Party. The Posting Party shall have the right to specify such means of compliance, provided, that it may specify Cash only to the extent that Excess Performance Assurance is in the form of Cash held by the Beneficiary Party or a Custodial Bank. If Excess Performance Assurance is returned by reducing the face amount of an outstanding Letter of Credit and the LC Issuer requires that the reduction be implemented through a cancellation of the existing Letter of Credit and the issuance of a new Letter of Credit with a reduced face amount, then (1) the Posting Party shall have delivered a new Letter of Credit to the Beneficiary Party in a form reasonably acceptable to the Beneficiary Party and in an amount that, when combined with the remaining amount of the then-current Performance Assurance, is not less than the then-current Collateral Requirement, and (2) in the event that an Event of Default occurs, as to which the Posting Party is the defaulting Party, between the Reduction Deadline and the date on which the new Letter of Credit is executed and delivered to the Beneficiary Party, the Beneficiary Party shall be entitled to draw from the existing Letter of Credit only an amount up to but not exceeding the then-current Collateral Requirement. The cost and expense of compliance

(including, but not limited to, the reasonable costs, expenses, and attorneys' fees of the Beneficiary Party and, if applicable, the LC Issuer or Custodial Bank) shall be the sole obligation of, and paid directly by, the Posting Party. If the Beneficiary Party pays any such cost or expense, the Posting Party shall reimburse the Beneficiary Party for each such cost and expense promptly following a demand for reimbursement. The Beneficiary Party shall comply with the demand on or before the Reduction Deadline. Any such demand made by the Posting Party under this Section 5(a) shall specify account information for the account to which Excess Performance Assurance in the form of Cash shall be delivered.

"Excess Performance Assurance" is an amount, calculated as of the date of the demand and rounded down to the nearest integral multiple of the Rounding Amount, which is equal to *(x)* less *(y)*, but no less than zero, where:

(x) is

the amount of Performance Assurance previously provided by or credited to the Posting Party for the benefit of the Beneficiary Party and not released as of the time the Posting Party made the demand, plus

the Collateral Threshold applicable to the Posting Party.

(y) is

the Termination Payment, if any, that would be owed to the Beneficiary Party if the Posting Party were the Defaulting Party under Section 22.1 of the WSPP Agreement, plus

the damages, if any, solely under Section 21.3 of the WSPP Agreement that would be owed to the Beneficiary Party if the Posting Party were the Non-Performing Party, plus

any further and additional amounts due for rendered performance by the Beneficiary Party to the Posting Party under any WSPP Agreement transactions, whether or not invoiced or due.

The foregoing notwithstanding, if under this Collateral Annex each Party has an obligation to maintain Performance Assurance with respect to the other Party, the Parties' obligations to transfer Performance Assurance hereunder, including obligations to post Performance Assurance under Section 4 of this Collateral Annex, at any time shall be determined on a net basis, and the Party with a net positive transfer obligation shall transfer Performance Assurance under this Section 5(a) in such amount.

(b) Return of All Performance Assurance. No later than one (1) Business Day after the last to occur of (i) the Termination Date, and (ii) (A) completion of all outstanding transactions between the Parties under the WSPP Agreement or (B) if all such outstanding transactions have not been completed, then payment by the Posting Party of all amounts due to the Beneficiary Party under Sections 21

and 22 of the WSPP Agreement with respect to uncompleted transactions, the Beneficiary Party shall return all outstanding Performance Assurance to the Posting Party less any amounts applied to the satisfaction of any of the Posting Party's Obligations.

(c) Substitution of Performance Assurance. Unless (i) an Event of Default has occurred and is continuing where the Posting Party is the Defaulting Party, (ii) a Potential Event of Default exists where the Posting Party is the potentially Defaulting Party, or (iii) an Early Termination has occurred or been designated with respect to the Posting Party pursuant to which the Posting Party has not satisfied all Obligations, the Posting Party may substitute Performance Assurance for existing Performance Assurance of equal value. The Posting Party must give notice of the substitution to the Beneficiary Party two (2) Business Days before the substitution is intended to occur no later than 5 p.m. New York time. The notice must specify whether the substitute Performance Assurance is Cash or a Letter of Credit and if the latter it shall include a draft thereof. If the substitute Performance Assurance is Cash or a Letter of Credit (in form consistent with this Collateral Annex), then the Posting Party may effect the substitution no earlier than two, and no later than five (5), Business Days after giving such notice. If the substitute Performance Assurance is not Cash or a Letter of Credit (in form consistent with this Collateral Annex), the substitution shall not be made unless the Beneficiary Party consents in writing thereto. No later than one Business Day after the Beneficiary Party receives substitute Performance Assurance in accordance with this Section, the Beneficiary Party shall transfer the Performance Assurance that has been replaced to the Posting Party. Notwithstanding anything herein to the contrary, no such substitution shall be permitted unless after giving effect to such substitution, the value of such substitute Performance Assurance shall equal the greater of the Posting Party's Collateral Requirement or the Posting Party's Minimum Transfer Amount. The substituted Performance Assurance shall be subject to and governed by the terms and conditions of this Collateral Annex.

6. Administration of Performance Assurance.

(a) Cash held by Beneficiary Party.

(i) Conditions Under Which A Beneficiary Party Is Entitled To Hold Cash. A Beneficiary Party shall be an "Eligible Beneficiary Party" entitled to hold Performance Assurance in the form of Cash if, and for only so long as, all of the following conditions (w), (x), (y) and (z) are satisfied:

(w) The Parties have agreed in the Cover Sheet Elections or otherwise in writing that the Beneficiary Party may hold Performance Assurance in the form of Cash.

(x) If the Cover Sheet Elections permit the Posting Party unilaterally to rescind the Parties' agreement that the Beneficiary Party shall be entitled to hold Performance Assurance in the form of Cash, the Posting Party has not rescinded such agreement.

(y) A Material Adverse Change with respect to the Beneficiary Party has

not occurred.

(z) The Beneficiary Party, the Posting Party, and a Custodial Bank have executed a Deposit Account Agreement, provided, that the Beneficiary Party is not required to place any Performance Assurance in the form of Cash in the Custodial Bank under such agreement except in the event of a cessation of Eligible Beneficiary Party status under Section 6(a)(iv) of this Collateral Annex.

(ii) Eligible Beneficiary Party's Use Of Cash. An Eligible Beneficiary Party shall be entitled to hold Performance Assurance in the form of Cash in any accounts it holds in the United States, and, notwithstanding anything to the contrary in UCC § 9-207, an Eligible Beneficiary Party shall also have the right to sell, pledge, rehypothecate, assign, invest, use, commingle or otherwise use in its business any Cash that it holds as Performance Assurance hereunder, free from any claim or right of any nature whatsoever of the Posting Party except for the Posting Party's rights under (A) Section 5(a), (b), and (c) of this Collateral Annex (reduction, return or substitution of Performance Assurance), (B) Section 6(a)(iv) (cessation of Eligible Beneficiary Party status), and (C) Section 8 of this Collateral Annex (Event of Default or Early Termination).

(iii) Appointment of Agent. The Eligible Beneficiary Party may, but is not required, to appoint an agent to hold Performance Assurance in the form of Cash on its behalf and to receive additional Performance Assurance. In the event an Eligible Beneficiary Party makes such an appointment, it must give notice to the Posting Party including the identity and address of the agent, no later than one (1) Business Day after the deposit. Upon the receipt of such notice, the Posting Party's obligations to make any transfer will be discharged by making the transfer to the agent. The Eligible Beneficiary Party may use Cash held by an agent in accordance with Section 6(a)(ii) of this Collateral Annex, subject to the Posting Party's rights referred to therein.

(iv) Cessation Of Eligible Beneficiary Party Status. The Beneficiary Party shall cease to be an Eligible Beneficiary Party immediately upon the failure of any one of conditions (w), (x), (y) or (z) of Section 6(a)(i) at any time (each a "Downgrade Event"), and thereafter such Beneficiary Party shall be considered a "Downgraded Party." Failure of (x) shall occur upon the Posting Party's giving notice to the Beneficiary Party of its rescission of the Parties' agreement that the Beneficiary Party shall be entitled to hold Performance Assurance in the form of Cash. A Downgraded Party shall transfer, or cause its agent to transfer, no later than the close of the next Business Day following the occurrence of the Downgrade Event, all Performance Assurance in the form of Cash to the Custodial Bank and all such Cash shall be maintained in a Deposit Account in accordance with Section 6(b) of this Collateral Annex and the terms and conditions of the Deposit Account Agreement. Upon the occurrence of a Downgrade Event, Section 6(a)(ii) concerning the Eligible Beneficiary Party's rights to use Cash shall cease to apply. After the occurrence of a Downgrade Event, a Downgraded Party shall not become an Eligible Beneficiary Party except upon the written agreement of the Posting Party. Nothing in this Section 6(a) shall diminish the Posting Party's rights under Section 8 of this Collateral Annex.

(v) Interest Payments On Cash. So long as no (i) Event of Default has occurred and is continuing where the Posting Party is the Defaulting Party or (ii) no Early Termination has occurred or been designated with respect to the Posting Party pursuant to which the Posting Party has not satisfied all of its Obligations, then, the Eligible Beneficiary Party will pay to the Posting Party, in lieu of any other amounts paid, earned, or deemed to have been paid or earned, with respect to such Cash (all of which may be retained by the Eligible Beneficiary Party), interest in amounts calculated in accordance with the Interest Rate. The Posting Party shall submit an invoice to the Beneficiary Party on the first Business Day of each month for interest due for the prior month, and shall set forth such calculation therein. The Eligible Beneficiary Party shall make payment thereof of any interest due to the Posting Party by the later of the next Business Day after submittal of the invoice. The Beneficiary Party shall determine in its sole discretion whether the method of payment shall be (a) an increase in the Performance Assurance credited to the Posting Party in an amount equal to any interest due, or (b) a transfer of funds to the Posting Party equal to any interest due.

(b) Cash Held By Custodial Bank.

(i) Conditions Under Which Cash Shall Be Held By Custodial Bank. The Custodial Bank shall hold Performance Assurance in the form of Cash if either of the following conditions is satisfied:

(x) The Parties have not agreed in the Cover Sheet Elections or otherwise in writing that the Beneficiary Party may hold Performance Assurance in the form of Cash.

(y) A Downgrade Event has occurred such that an Eligible Beneficiary Party has become a Downgraded Party.

(ii) Use Of Cash. In the event the Custodial Bank holds Performance Assurance in the form of Cash under this Section 6(b), the Beneficiary Party shall have no right to use or receive Performance Assurance in the form of Cash held by the Custodial Bank except, if an Event of Default has occurred where the Posting Party is the Defaulting Party or an Early Termination has occurred or been designated with respect to such Posting Party for which the Posting Party has not satisfied Obligations, then the Beneficiary Party shall have a right to receive Cash in payment of the Posting Party's Obligations. The Custodial Bank shall hold and disburse Performance Assurance in the form of Cash in accordance with the terms of this Collateral Annex and for the security interest and benefit of the Beneficiary Party and, subject solely to such security interest, for the ownership of the Posting Party. Performance Assurance in the form of Cash shall be held in a Deposit Account (A) designated for the ownership of the Posting Party, (B) controlled by the Beneficiary Party in accordance with the terms of the Deposit Account Agreement, and (C) designated for the security interest and benefit of the Beneficiary Party under this Collateral Annex and the Deposit Account Agreement.

(iii) Interest Payments On Cash. So long as no (i) Event of Default has occurred and is continuing where the Posting Party is the Defaulting Party and (ii)

no Early Termination has occurred or been designated with respect to such Posting Party for which the Posting Party has not satisfied Obligations, then, the Custodial Bank, on behalf of the Beneficiary Party will pay to the Posting Party, in lieu of any other amounts paid, earned, or deemed to have been paid or earned, with respect to such Cash, interest in amounts calculated and paid in accordance with the Deposit Account Agreement or otherwise agreed by the Custodial Bank and Parties in writing. Payment shall be made by increasing the Performance Assurance credited to the Posting Party in an amount equal to any interest due, unless the Beneficiary Party instructs the Custodial Bank to make payment by transferring funds to the Posting Party in an amount equal to any interest due.

(iv) Other Conditions. All terms and conditions stated in the Deposit Account Agreement as they apply to the Parties are incorporated into this Collateral Annex.

(c) Letters of Credit. Performance Assurance provided in the form of a Letter of Credit shall be subject to the following provisions, provided, that nothing in this Section 6(c) is intended to modify any terms and conditions contained in any Letter of Credit that apply to draws thereon and it is recognized that the Parties may agree to additional terms and conditions not stated herein.

(i) The Posting Party shall maintain for the benefit of the Beneficiary Party any Letter of Credit provided as Performance Assurance in accordance with Section 4 of this Collateral Annex. The Posting Party shall *(a)* renew or cause the renewal of each outstanding Letter of Credit not less than thirty (30) days prior to its expiration in accordance with the terms contained in the applicable Letter of Credit, *(b)* if the LC Issuer has indicated its intent not to renew such Letter of Credit, provide either (1) a Letter of Credit issued by a Qualified Institution in the same face amount and on substantially the same terms as the outstanding Letter of Credit (each, a "Replacement Letter of Credit") or (2) Performance Assurance in the form of Cash equal to the face amount of such outstanding Letter of Credit in a form acceptable to the Beneficiary Party ("Replacement Performance Assurance"), in each case at least twenty (20) days prior to the expiration of the applicable Letter of Credit, and *(c)* if the LC Issuer shall fail to honor the Beneficiary Party's request to draw on an outstanding Letter of Credit in accordance with the terms thereof, provide for the benefit of the Beneficiary Party either (1) a Replacement Letter of Credit or (2) Replacement Performance Assurance, in each case within two (2) Business Days after such refusal, provided, that, as a result of the Posting Party's failure to perform in accordance with *(a)*, *(b)*, or *(c)* above, the Posting Party's Collateral Requirement would be greater than zero. The foregoing notwithstanding, the Beneficiary Party may reject a Replacement Letter of Credit that conforms to the requirements of this Section if in the Beneficiary Party's sole discretion acceptance of additional credit from the applicable LC Issuer would be an unacceptable credit risk due to other commitments it had accepted from such LC Issuer, provided, that in the event of such rejection, the Beneficiary Party shall pay any costs incurred by the Posting Party in obtaining a Replacement Letter of Credit from a different LC Issuer. Rejection of a Replacement Letter of Credit under the immediately prior sentence shall not relieve a Posting Party of its obligations to maintain adequate Performance Assurance at all times under this Collateral Annex.

(ii) Upon the occurrence of a Letter of Credit Default, the Posting Party shall deliver to the Beneficiary Party either a Replacement Letter of Credit or Replacement Performance Assurance, in each case on or before the first Business Day after the occurrence thereof (or the fifth (5th) Business Day after the occurrence thereof if only clause (a) under the definition of Letter of Credit Default applies), in such amounts that on the day such Replacement Letter of Credit or Replacement Performance Assurance is provided the Collateral Requirement is zero.

(iii) Upon or at any time after the occurrence of an Event of Default that is continuing where the Posting Party is the Defaulting Party, or if an Early Termination has occurred or been designated with respect to the Posting Party pursuant to which the Posting Party has not satisfied all of its Obligations, then the Beneficiary Party may draw on the entire, undrawn portion of any outstanding Letter of Credit in accordance with its terms. Notwithstanding the Beneficiary Party's receipt of Cash under the Letter of Credit, the Posting Party shall remain liable for any failure to transfer sufficient Performance Assurance and for any Obligations owing to the Beneficiary Party and remaining unpaid after the application of the amounts so drawn by the Beneficiary Party.

(iv) In all cases, the costs and expenses (including but not limited to the reasonable costs, expenses, and attorneys' fees of the Beneficiary Party) of establishing, renewing, substituting, reissuing, canceling, and increasing the face amount of (as the case may be) a Letter of Credit shall be paid by the Posting Party, or if paid by the Beneficiary Party, promptly reimbursed by the Posting Party following the Beneficiary Party's demand for reimbursement.

(d) Performance Assurance in Forms Other than Cash or Letters of Credit. The Parties may agree that a Party may provide Performance Assurance in forms other than Cash or Letters of Credit, and may agree to additional terms and conditions respecting such Performance Assurance.

(e) Care of Performance Assurance. Except for duties to comply with all requirements concerning Performance Assurance stated herein, the Beneficiary Party shall have no duty as to any Performance Assurance in its possession or control or in the possession or control of any Custodial Bank or any income thereon or as to the preservation of rights against prior parties or any other rights pertaining thereto. The Eligible Beneficiary Party shall not be liable or responsible for any diminution in the value of Performance Assurance by reason of the act or omission of a Custodial Bank. Unless held by a Custodial Bank and except as required under Section 6(a)(iv) of this Collateral Annex, the Beneficiary Party, or its agent appointed under Section 6(a)(iii), shall at all times retain possession or control of Performance Assurance delivered to it. To the extent if any that this Section 6(e) is inconsistent with UCC § 9-207, this Section 6(e) shall control.

7. Beneficiary Party's Exercise of Rights Concerning Performance Assurance.

(a) In the event that *(x)* an Event of Default has occurred and is continuing where the Posting Party is the Defaulting Party or *(y)* an Early Termination has occurred or been designated with respect to the Posting Party for which the Posting Party has not satisfied all of its Obligations, the Beneficiary Party may exercise any one

or more of the rights and remedies provided under the WSPP Agreement, under this Collateral Annex or as otherwise may be available under applicable law. Without limiting the foregoing, if at any time *(x)* or *(y)* has occurred, then the Beneficiary Party may, in its sole discretion, declare all Obligations immediately due and payable without presentment, demand, notice, protest or other formalities of any kind (all of which are hereby expressly waived by the Posting Party) and exercise any one or more of the following rights and remedies:

(i) All rights and remedies available to the Beneficiary Party under UCC Article 9 or the uniform commercial code of any jurisdiction in which the Performance Assurance is being held and any other applicable jurisdiction and other applicable laws with respect to the preservation of or foreclosure upon collateral.

(ii) The right to set off any Performance Assurance held by or for the benefit of the Beneficiary Party against and in satisfaction of any amount payable by the Posting Party in respect of any of its Obligations.

(iii) The right to draw the full undrawn face amount of each outstanding Letter of Credit issued for its benefit.

(iv) The right to instruct the Custodial Bank to transfer all Performance Assurance held in a Deposit Account to an account of the Beneficiary Party or otherwise to or for the benefit of the Beneficiary Party.

(v) The right to liquidate any Performance Assurance held by or for the benefit of the Beneficiary Party, free from any claim or right of any nature whatsoever of the Posting Party, and to apply the proceeds received following the exercise of the rights and remedies set forth above as follows (A) first, to the payment of (1) all costs and expenses relating to the sale of any Performance Assurance and collection of amounts owing hereunder, including reasonable attorneys' fees and disbursements and the just compensation of the Beneficiary Party for services rendered in connection therewith or in connection with any proceeding to sell if a sale is not completed, and (2) all charges, expenses and advances incurred or made by the Beneficiary Party in order to protect the lien provided under this Collateral Annex; (B) second, to the payment in full of all of the Obligations owed to the Beneficiary Party hereunder in such order as the Beneficiary Party may elect; and (C) third, the balance, if any, shall be paid to the Posting Party.

(b) The Posting Party hereby irrevocably constitutes and appoints the Beneficiary Party and any officer or agent thereof, with full power of substitution, as the Posting Party's true and lawful attorney-in-fact (which appointment shall be coupled with an interest) with full irrevocable power and authority to act in the name, place and stead of the Posting Party or in the Beneficiary Party's own name, from time to time in the Beneficiary Party's discretion, solely for the purpose of taking any and all action and executing and delivering any and all documents or instruments which may be necessary or desirable to accomplish the purposes of Section 7(a). Notwithstanding the foregoing, the Beneficiary

Party shall not be obligated to exercise any right or duty as attorney-in-fact, and shall have no duties to the Posting party in connection therewith.

(c) The Posting Party shall in all events remain liable to the Beneficiary Party for any amount payable by the Posting Party in respect of any of its Obligations remaining unpaid after any such liquidation, application and set off and the Beneficiary Party shall have the right to proceed against the Posting Party for any such deficiency.

8. Posting Party's Exercise of Rights Concerning Performance Assurance.

If at any time *(a)* an Event of Default has occurred and is continuing where the Beneficiary Party is the Defaulting Party, or *(b)* an Early Termination has occurred or been designated with respect to the Beneficiary Party for which the Beneficiary Party has not satisfied all of its Obligations, then:

(i) on the day of such occurrence, the Beneficiary Party will be obligated to transfer all Performance Assurance (including any Letter of Credit) and interest in amounts calculated in accordance with the Interest Rate, if any, to the Posting Party;

(ii) the Posting Party may do any one or more of the following: *(a)* exercise any of the rights and remedies of a pledgor with respect to the Performance Assurance, including any such rights and remedies under law then in effect; *(b)* to the extent that Performance Assurance is not transferred to the Posting Party as required in (i) above, setoff amounts payable to the Beneficiary Party against the Performance Assurance (other than Letters of Credit) held by the Beneficiary Party or to the extent its rights to setoff are not exercised, withhold payment of any remaining amounts payable by the Posting Party, up to the value of any Performance Assurance that has not been so transferred, until the Performance Assurance is transferred to the Posting Party; *(c)* exercise rights and remedies available to the Posting Party under the terms of any Letter of Credit; and *(d)* exercise any applicable rights and remedies available to the Posting Party under the WSPP Agreement; and

(iii) the Beneficiary Party shall be prohibited from drawing on any Letter of Credit that has been posted by the Posting Party for its benefit.

9. Disputed Calculations.

If a Party shall dispute the Collateral Requirement determined by the Beneficiary Party or the Excess Performance Assurance determined by the Posting Party and such dispute relates to the Termination Payment calculated by the other Party under Section 22.1 of the WSPP Agreement or damages calculation under Section 21.3 of the WSPP Agreement, then the Party contesting the Termination Payment calculation or damages calculation shall:

(i) notify the other Party of the existence and nature of the dispute not later than 4 p.m. New York Time on the same day a Party has demanded additional Performance Assurance under Section 4 of this Collateral Annex or the return of Excess Performance Assurance under Section 5 of this Collateral Annex;

(ii) if a Beneficiary Party has demanded that the Posting Party provide Performance Assurance under Section 4, the Posting Party shall provide Performance Assurance to satisfy its Collateral Requirement based upon the Beneficiary Party's estimate, made in good faith and in a commercially reasonable manner, of the Termination Payment if the Posting Party were the Defaulting Party under Section 22.1 of the WSPP Agreement and the damages under Section 21.3 of the WSPP Agreement if the Posting Party were required to pay such damages; and

(iii) if a Posting Party has demanded that the Beneficiary Party return Excess Performance Assurance under Section 5, the Beneficiary Party shall return Excess Performance Assurance based upon the Beneficiary Party's estimate, made in good faith and in a commercially a commercially reasonable manner, of the Termination Payment if the Posting Party were the Defaulting Party under Section 22.1 of the WSPP Agreement and the damages under Section 21.3 of the WSPP Agreement if the Posting Party were required to pay such damages.

In all such cases, the Parties thereafter shall promptly negotiate in good faith in order to reconcile the dispute or a method for resolving the dispute. If the Parties fail to resolve the dispute on or before the first Business Day following the date that the demand is made by the Party contesting the Termination Payment calculation or the damages calculation, then such Termination Payment or damages calculation shall be determined based upon quotations from Dealers in energy contracts. Each Party may obtain up to a maximum of four (4) quotations which must be provided to the other Party on the same day as the demand, if the demand is made no later than 2 p.m. New York Time, or the next Business Day, if the demand is made after 2 p.m. Eastern Time. These quotations shall reflect transacted prices in comparable contracts. The Termination Payment or damages calculation shall equal a simple average of the quotations obtained and provided by the Parties consistent with the provisions of this Section 9. Each Party providing quotations to the other Party also shall identify to the other Party the Dealer(s) who provided each of the quotations to allow verification. Performance Assurance shall thereupon be provided, or Excess Performance returned, as the case may be, on the next Business Day after provision to the Posting Party of the recalculation, in accordance with the results of such recalculation. The results of this process shall be enforceable in a court of law unless fraudulent.

10. <u>Covenants; Representations and Warranties; Miscellaneous</u>.

(a) The Posting Party will execute and deliver to the Beneficiary Party (and to the extent permitted by applicable law, the Posting Party hereby authorizes the Beneficiary Party to execute and deliver, in the name of the Posting Party or otherwise) such financing statements, assignments and other documents and do such other things relating to the Performance Assurance and the security interest granted under this Collateral Annex including any action the Beneficiary Party may deem necessary or appropriate to perfect or maintain perfection of its security interest in the Performance Assurance, and the Posting Party shall pay all costs relating to its delivery of Performance Assurance and the maintenance and perfection of the security interest therein.

(b) On each day on which Performance Assurance is held under this Collateral Annex by the Beneficiary Party and/or its agent, or by the Custodial Bank under

the Deposit Account Agreement, the Posting Party hereby represents and warrants that:

(i) the Posting Party has good and marketable title to and is the sole owner of such Performance Assurance, and the execution, delivery and performance of the covenants and agreements of this Collateral Annex, do not result in the creation or imposition of any lien or security interest upon any of its assets or properties, including, without limitation, the Performance Assurance, other than the security interests and liens created under the WSPP Agreement and this Collateral Annex;

(ii) upon the transfer of Performance Assurance by the Posting Party to the Beneficiary Party, its agent, or the Custodial Bank for the benefit of the Beneficiary Party, the Beneficiary Party shall have a valid and perfected first priority continuing security interest therein, free of any liens, security interests, claims or encumbrances, except those liens, security interests, claims or encumbrances arising by operation of law that are given priority over a perfected security interest;

(iii) it is not and will not become a Party to or otherwise be bound by any agreement, other than the WSPP Agreement and this Collateral Annex, or amendments thereto, which restricts in any manner the rights of any present or future holder of any of the Performance Assurance with respect hereto; and

(iv) No approval or authorization by, and no filing with or consent of, any federal, state, local, municipal or other government agency, department or regulatory authority is required either (A) for the grant by the Posting Party of the liens granted hereby or for the execution, delivery or performance of this Collateral Annex by the Posting Party or (B) for the perfection (except for filing of any financing statements in the jurisdictions identified in writing by the Posting Party) of the liens created hereby or the exercise by the Beneficiary Party of the rights and remedies hereunder.

(c) This Collateral Annex has been and is made solely for the benefit of the Parties and their permitted successors and assigns, and no other person, partnership, association, corporation, or other entity shall acquire or have any right thereunder or by virtue of this Collateral Annex.

(d) Each Party represents and warrants to the other Party that (i) it has all requisite power and authority to execute and deliver this Collateral Annex, to consummate the transactions contemplated hereby and to perform its respective obligations hereunder; (ii) it has taken all necessary action to authorize the execution, delivery and performance of this Collateral Annex and (iii) this Collateral Annex has been duly executed and delivered and, when executed and delivered by the other Party, will constitute the legal, valid and binding obligation of such Party enforceable against it in accordance with its terms except as such enforcement may be limited by bankruptcy, insolvency, moratorium or similar laws affecting the rights of creditors generally or by general equitable principles (regardless of whether enforcement is sought in a proceeding in equity or at law). Each Party, at the time of execution, shall provide the other Party with evidence of such authority reasonably acceptable to the other Party, including, if the Collateral

Annex is executed by an officer, a certificate of incumbency, and, if requested by the other Party, a written opinion of counsel (the opinion of a Party's in-house counsel shall suffice), in such form as is reasonably acceptable to the other Party, that person who executed this Collateral Annex was duly authorized in accordance with all actions requisite to establish such authority.

(e) As of the date a Party executes this Collateral Annex, the Cover Sheet Elections, Deposit Account Agreement, or Security Agreement, or any amendment thereto, such Party is a member in good standing of WSPP, Inc.

(f) Section 34 of the WSPP Agreement is inapplicable to any disputes concerning the enforcement of this Collateral Annex or the rights and obligations set forth herein concerning Performance Assurance. In the event litigation is commenced by either Party to enforce this Collateral Annex or collect any amounts required to be paid, provided or transferred hereunder, each Party agrees to pay the other Party for all reasonable attorneys fees, disbursements, and court costs incurred by the prevailing Party in such litigation.

(g) No delay or forbearance by any Party or its agents in exercising any right, power, privilege, or remedy accruing to such Party upon the occurrence of any breach or default by the other Party under this Collateral Annex, and no course of dealing between the Parties, shall impair any such right, power or remedy of the non-defaulting Party, nor shall it be construed to be a waiver of any such breach or default, or an acquiescence therein, or of any similar breach or default thereafter occurring, nor shall any waiver of any single breach or default be deemed a waiver of any other breach or default theretofore or thereafter occurring. Any waiver, permit, consent or approval of any kind or character on the part of a Party of any such breach or default under this Collateral Annex, or any waiver on the part of any non-defaulting Party hereto of any provision or condition of this Collateral Annex, must be in writing and shall be effective only to the extent specifically set forth in such writing. This Collateral Annex may be amended only by a document executed by the Parties.

(h) Each demand, notice, consent, agreement, approval or other communication required or permitted to be given from one Party to the other Party under this Collateral Annex shall be provided in writing (unless expressly provided otherwise) and shall be submitted by recognized overnight courier service or telefacsimile addressed to the recipient Party at its address or telefacsimile number set forth in Part VIII of the Cover Sheet Elections or as changed by notice to the other Party. All such notices, requests, demands, approvals and other communications shall be deemed to have been duly given, received and effective when: (a) received if personally delivered; (b) on the day transmitted (unless transmitted after 5:00 p.m. at the place of receipt or on a day that is not a Business Day, in which case it shall be deemed received on the next Business Day), if transmitted by facsimile transmission and the sender's facsimile machine has received the correct answerback of the addressee and confirmation of uninterrupted transmission by a transmission report or the recipient confirming by telephone to sender that he has received the facsimile message; (c) the day immediately following the day it is sent, if sent for next day delivery to a domestic address by a nationally-recognized overnight courier or delivery service; (d) on the day of receipt, if sent by certified or registered mail, return receipt requested;

and (e) on the date actually received, if sent or delivered by any other means; provided, that any notice, demand, request or other communication made or delivered in connection with an alleged breach or default hereunder (including an Event of Default) shall only be delivered personally or by a nationally-recognized overnight courier or delivery service. Whenever this Collateral Annex provides that a demand, notice, consent, agreement, approval or other communication shall be provided in "writing" or shall be provided in "written" form, such demand, notice, consent, agreement, approval or other communication shall only be effective hereunder if provided by a manually signed original, photocopy or telefacsimile copy from the Party or Parties to be bound thereby.

(i) The headings in this Collateral Annex are for convenience of reference only, and shall not affect the meaning or construction of any provision thereof.

(j) This Collateral Annex shall be governed by, and construed and interpreted in accordance with, the laws of the State of Utah, except to the extent that the perfection, the effect of perfection or nonperfection and the priority of the security interest granted hereunder, or remedies hereunder, are governed by provisions of the UCC, including but not limited to UCC §§ 9-301, 9-303, 9-304, 9-305, 9-306 and 9-307, that may call for the application of the laws of jurisdictions other than the State of Utah.

(k) This Collateral Annex may be executed in one or more counterparts, all of which, when taken together, shall constitute one and the same instrument and each of the Parties hereto may execute this Collateral Annex by signing any such counterpart.

IN WITNESS HEREOF, the Parties have caused this Collateral Annex to be duly executed effective as of the date first written above.

Party A	**Party B**
City of Roseville	NRG Business Marketing LLC
_____	_____
[Sign here]	[Sign here]
_____	Joseph A. Holtman
[Print name]	[Print name]
_____	VP, Power Trading
Title	Title
Date: _____	Date: 1/20/2026

COVER SHEET ELECTIONS
applicable to the
COLLATERAL ANNEX
to the
WSPP AGREEMENT

This Cover Sheet Elections applicable to the Collateral Annex to the WSPP Agreement ("Cover Sheet Elections") between the Parties dated as of January 16, 2026 is between:

City of Roseville ("Party A") and
NRG Business Marketing LLC ("Party B").

This Cover Sheet Elections sets forth the Parties' agreements to supplement the Collateral Annex and, as the Parties may determine, vary the terms and conditions of the Collateral Annex. To the extent there are any inconsistencies between the terms and conditions of the Collateral Annex, excluding the Cover Sheet Elections, and these Cover Sheet Elections, the Cover Sheet Elections shall prevail.

Terms that are capitalized for reasons other than grammatical reasons shall have the meanings assigned to them in Section 1 of the Collateral Annex.

The Collateral Threshold, Interest Rate, Minimum Transfer Amount and Rounding Amount, shall each be zero (0) unless a different amount is stated below.

I. Collateral Threshold.

Explanatory note: The Beneficiary Party's exposure due to the other Party's failure to perform a WSPP Agreement transaction is the sum of (a) the Termination Payment under WSPP Agreement § 22, (b) damages under WSPP Agreement § 21.3, and (c) any further and additional amounts due for rendered performance by the Beneficiary Party to the Posting Party, whether or not invoiced. The Collateral Threshold is the portion, if any, of this exposure that the Parties agree in this Cover Sheet Elections will not be secured with Performance Assurance.

A. Party A Collateral Threshold.

Name of Party A Guarantor, if applicable:
Not Applicable ("Party A Guarantor")

If a Guarantor is identified, then all references to Party A shall include Party A Guarantor unless otherwise indicated and Party A shall be deemed to have the Credit Rating of Party A Guarantor.

☐ The Collateral Threshold for Party A shall be $_____; provided, however, that the Collateral Threshold shall be zero in the event of a Material Adverse Change as defined in Part II hereof with respect to Party A.

☒ The Collateral Threshold for Party A shall be (a) the amount set forth in the chart below under the heading "Collateral Threshold" opposite the Credit Rating for Party A on the relevant date of determination, and if such Credit Ratings shall not be equivalent, the lower Credit Rating shall govern, or (b) zero if on the relevant date of determination none of the rating agencies

specified below has a Credit Rating in effect with respect to Party A or in the event of a Material Adverse Change as defined in Part II hereof with respect to Party A:

S&P	***Moody's***	***Threshold***
A- and above	**A3 and above**	**$25,000,000.00**
BBB+	**Baa1**	**$15,000,000.00**
BBB	**Baa2**	**$10,000,000.00**
BBB-	**Baa3**	**$2,500,000.00**
BBB- and below	**Baa3 and below**	**$ 0 (zero)**

☐ The Collateral Threshold for Party A shall be (a) the amount set forth in the chart above under the heading "Collateral Threshold" opposite the Credit Rating for Party A on the relevant date of determination, and if such Credit Ratings shall not be equivalent, the higher two Credit Ratings shall govern, or (b) zero if on the relevant date of determination none of the rating agencies specified below has a Credit Rating in effect with respect to Party A or in the event of a Material Adverse Change with respect to Party A.

☐ The Collateral Threshold for Party A shall be the amount of the Guaranty Agreement dated _____ from Party A Guarantor, as amended from time to time, but in no event shall Party A's Collateral Threshold be greater than $_____.

B. Party B Collateral Threshold.

Name of Party B Guarantor, if applicable:
NRG Energy, Inc. ("Party B Guarantor")

If a Guarantor is identified, then all references to Party B shall include Party B Guarantor unless otherwise indicated and Party B shall be deemed to have the Credit Rating of Party B Guarantor.

☐ The Collateral Threshold for Party B shall be $_____; provided, however, that the Collateral Threshold shall be zero in the event of a Material Adverse Change as defined in Part II hereof with respect to Party B.

☒ The Collateral Threshold for Party B shall be (a) the amount set forth in the chart below under the heading "Collateral Threshold" opposite the Credit Rating for Party B on the relevant date of determination, and if such Credit Ratings shall not be equivalent, the lower Credit Rating shall govern, or (b) zero if on the relevant date of determination none of the rating agencies specified below has a Credit Rating in effect with respect to Party B or in the event of a Material Adverse Change as defined in Part II hereof with respect to Party B:

S&P	***Moody's***	***Threshold***
A- and above	**A3 and above**	**$25,000,000.00**
BBB+	**Baa1**	**$15,000,000.00**
BBB	**Baa2**	**$10,000,000.00**
BBB-	**Baa3**	**$2,500,000.00**
BBB- and below	**Baa3 and below**	**$ 0 (zero)**

☐ The Collateral Threshold for Party B shall be (a) the amount set forth in the chart above under the heading "Collateral Threshold" opposite the Credit Rating for Party B on the relevant date of determination, and if such Credit Ratings shall not be equivalent, the higher two Credit Ratings shall govern, or (b) zero if on the relevant date of determination none of the rating agencies specified below has a Credit Rating in effect with respect to Party B or in the event of a Material Adverse Change with respect to Party B.

☐ The Collateral Threshold for Party B shall be the amount of the Guaranty Agreement dated _____ from Party B Guarantor, as amended from time to time, but in no event shall Party B's Collateral Threshold be greater than $_____.

II. Material Adverse Change.

A. Party A

A Material Adverse Change shall occur with respect to Party A in the following circumstances:

☐ (i) Its Credit Rating falls below ____ by S&P or ____ by Moody's; or (ii) it is given an "issuer rating" by S&P below _____ or by Moody's below ____; or (iii) it has no Credit Rating by either S&P or Moody's.

☐ Party A's creditworthiness, financial responsibility, or performance viability has become unsatisfactory to Party B in Party B's reasonably exercised discretion with regard to a transaction between the Parties conducted under the WSPP Agreement.

☒ An Event of Default shall have occurred and is continuing where Party A is the Defaulting Party, or a Potential Event of Default has occurred where Party A is the potentially Defaulting Party, or an Early Termination has occurred or been designated with respect to Party A for which Party A has not satisfied its Obligations.

☐ Other:_____

B. Party B

A Material Adverse Change shall occur with respect to Party B in the following circumstances:

☐ (i) Its Credit Rating falls below ____ by S&P or ____ by Moody's; or (ii) it is given an "issuer rating" by S&P below _____ or by Moody's below ____; or (iii) it has no Credit Rating by either S&P or Moody's.

☐ Party B's creditworthiness, financial responsibility, or performance viability has become unsatisfactory to Party A in Party A's reasonably exercised discretion with regard to a transaction between the Parties conducted under the WSPP Agreement.

☒ An Event of Default shall have occurred and is continuing where Party B is the Defaulting Party, or a Potential Event of Default has occurred where Party B is the potentially Defaulting Party, or an Early Termination has occurred or been designated with respect to Party B for which Party B has not satisfied its Obligations.

☐ Other:_____

III. General Credit Assurances.

Explanatory note: If in Part II above either Party elected the second option (Material Adverse Change includes unsatisfactory creditworthiness, financial responsibility, or performance viability) (such election, a "Section 27 Inclusion"), the Parties must make the first election in this Part III. If in Part II the Parties did not elect a Section 27 Inclusion and if they do not make either election in this Part III, then the second election under this Part III shall apply by default.

☐ Section 27 of the WSPP Agreement applies, provided, that (a) the following phrase is added after the last word of Section 22.1(d): "or in the Collateral Annex to the WSPP Agreement between the Parties," (b) the following phrase is deleted: "The Second Party's obligations under this Section 27 shall be limited to a reasonable estimate of the damages to the First Party (consistent with Section 21.3 of this Agreement) if the Second Party were to fail to perform its obligations," and (c) the phrase "within three (3) Business Days of demand therefore" is revised to state "within one (1) Business Day after receipt of demand therefor."

☒ Section 27 of the WSPP Agreement does not apply; Sections 27 and Section 22.1(d) of the WSPP Agreement are inapplicable to WSPP Agreement transactions between the Parties.

IV. Minimum Transfer Amount.

A. Party A Minimum Transfer Amount: $10,000

B. Party B Minimum Transfer Amount: $10,000

V. Rounding Amount.

A. Party A Rounding Amount: $100,000

B. Party B Rounding Amount: $100,000

VI. Administration of Cash Collateral.

A. Party A Eligibility to Hold Performance Assurance in form of Cash; Interest Rate.

Note: if neither of the two options immediately below is selected, then Option A shall apply.

☐ **Option A:** Party A shall not be entitled to hold Performance Assurance in the form of Cash. Performance Assurance in the form of Cash shall be held solely by a Custodial Bank in accordance with Section 6(b) of the Collateral Annex.

☒ **Option B:** Party A shall be entitled to hold Performance Assurance in the form of Cash under Section 6(a)(i), (ii) and (iii) of the Collateral Annex, provided, that no Downgrade Event has occurred with respect to Party A. **If Option B is elected, the Parties must complete the following election:**

Right of Party B to Rescind Option B:

☐ Party B shall be entitled to rescind Option B unilaterally, in its sole discretion, such that upon rescission (in accordance with Section 6(a)(iv) of the Collateral Annex) Party A shall not be entitled to hold Performance Assurance in the form of Cash and Section 6(a)(iv) of the Collateral Annex shall become applicable.

☒ Party B shall not be entitled to rescind Option B unilaterally, in its sole discretion, provided, Party B shall lose its entitlement to hold Performance Assurance in the form of Cash upon the occurrence of any other Downgrade Event under Section 6(a)(iv) of the Collateral Annex.

To the extent Party A is entitled to hold Cash, the Interest Rate payable to Party B on Cash shall be as elected below:

Party A Interest Rate.

☒ Federal Funds Effective Rate - the rate for that day opposite the caption "Federal Funds (Effective)" as set forth in the weekly statistical release designated as H.15(519), or any successor publication, published by the Board of Governors of the Federal Reserve System. *(If neither Interest Rate box is checked, or the "Other" box is not completed, the Federal Funds Rate specified herein shall apply.)*

☐ Other - _____

B. Party B Eligibility to Hold Performance Assurance in form of Cash; Interest Rate.

Note: if neither of the two options immediately below is selected, then Option A shall apply.

☐ **Option A:** Party B shall not be entitled to hold Performance Assurance in the form of Cash. Performance Assurance in the form of Cash shall be held solely by a Custodial Bank in accordance with Section 6(b) of the Collateral Annex.

☒ **Option B:** Party B shall be entitled to hold Performance Assurance in the form of Cash under Section 6(a)(i), (ii) and (iii) of the Collateral Annex, provided, that no Downgrade Event has occurred with respect to Party B. **If Option B is elected, the Parties must complete the following election:**

Right of Party A to Rescind Option B:

☐ Party A shall be entitled to rescind Option B unilaterally, in its sole discretion, such that upon rescission (in accordance with Section 6(a)(iv) of the Collateral Annex) Party B shall not be entitled to hold Performance Assurance in the form of Cash and Section 6(a)(iv) of the Collateral Annex shall become applicable.

☒ Party A shall not be entitled to rescind Option B unilaterally, in its sole discretion, provided, Party A shall lose its entitlement to hold Performance Assurance in the form of Cash upon the occurrence of any other Downgrade Event under Section 6(a)(iv) of the Collateral Annex.

To the extent Party A is entitled to hold Cash, the Interest Rate payable to Party B on Cash shall be as elected below:

Party B Interest Rate.

☒ Federal Funds Effective Rate - the rate for that day opposite the caption "Federal Funds (Effective)" as set forth in the weekly statistical release designated as H.15(519), or any successor publication, published by the Board of Governors of the Federal Reserve System. *(If neither Interest Rate box is checked, or the "Other" box is not completed, the Federal Funds Rate specified herein shall apply.)*

☐ Other - _____

C. Posting Deadline for Collateral Requirement

The Posting Party shall be required to provide Performance Assurance to cover an outstanding Collateral Requirement under Section 4 of the Collateral Annex no later than close of business on the Local Business Day following the date on which a Demand Notice is received(the "Posting Deadline"), provided, that if the Demand Notice is sent/received after 1 p.m. New York time on that day, then the Posting Deadline shall be 24 hours later.

D. Reduction Deadline for Transfer of Excess Performance Assurance

The Beneficiary Party shall be required to transfer Excess Performance Assurance to the Posting Party under Section 5 of the Collateral Annex no later than close of business on the Local Business Day following the date on which demand is received (the "Reduction Deadline"), provided, that if the demand for return of

Excess Performance Assurance is sent/received after 1 p.m. New York time on that day, then the Reduction Deadline shall be 24 hours later.

VII. Letters of Credit

A. Definition of LC Issuer:

If the Parties agree that a specific entity shall be an LC Issuer even if may not satisfy the credit rating specified in the definition of LC Issuer set forth in the Collateral Annex, identify such entity here:

_____

If the Parties agree to a different definition of LC Issuer than the definition specified in the Collateral Annex, state such definition here:

_____
_____
_____

B. Definition of Letter of Credit

☒ "Letter of Credit" means an irrevocable, non-transferable, standby letter of credit, issued by a Qualified Institution, or other issuer to which the Parties may agree in writing, in a form consistent with the Parties' agreements stated below and otherwise reasonably acceptable to the Beneficiary Party. Each Letter of Credit shall contain the following terms and conditions:

☐ "Letter of Credit" has the following meaning:

_____
_____

Regardless of the Parties' election in this Part VII.B above, the Parties may specify here additional terms and conditions that a Letter of Credit shall contain:

_____
_____
_____

VIII. Notice and other Communications Under Section 10(h) of Collateral Annex

Each demand, notice, consent, agreement, approval or other communication required or permitted to be given from one Party to the other Party under the Collateral Annex shall be submitted to the recipient Party at the following address or fax number:

Party A:

Attention:	Power Supply and Portfolio Administrator
Street:	116 S. Grant Street
City, State, Zip Code:	Roseville, CA 95678
Fax No.:	(916) 774-5583

Party B:

Attention:	Director, Credit Risk
Street:	804 Carnegie Center
City, State, Zip Code:	Princeton, NJ 08540
Email:	WholesaleCredit_DE@nrg.com

Execution of Cover Sheet Elections:

Party A	**Party B**
City of Roseville Name of Party:	NRG Business Marketing LLC Name of Party
_____ [Sign here]	_____ [Sign here]
_____ [Print name]	Joseph A. Holtman [Print name]
_____ Title	VP, Power Trading Title
Date: _____	Date: 1/20/2026

RESOLUTION NO. 26-050

APPROVING THE WESTERN SYSTEMS POWER POOL COLLATERAL ANNEX AND COVER SHEET ELECTIONS, BY AND BETWEEN THE CITY OF ROSEVILLE AND TRIOLITH ENERGY FUND, LP, AND AUTHORIZING THE CITY MANAGER TO EXECUTE THEM ON BEHALF OF THE CITY OF ROSEVILLE

WHEREAS, Roseville Electric Utility has historically used the Western Systems Power Pool (WSPP) Agreement as its standard contractual framework for physical power transactions; and

WHEREAS, the Collateral Annex and Cover Sheet Elections are standardized supplements to that agreement, used to define bilateral credit and collateral obligations with individual counterparties; and

WHEREAS, the Collateral Annex and Cover Sheet Elections to the WSPP Agreement, by and between the City of Roseville and Triolith Energy Fund, LP, have been reviewed by the City Council.

NOW, THEREFORE, BE IT RESOLVED by the Council of the City of Roseville that said Western Systems Power Pool Collateral Annex and Cover Sheet Elections are hereby approved and that the City Manager is authorized to execute them on behalf of the City of Roseville.

PASSED AND ADOPTED by the Council of the City of Roseville this ___ day of _____, 2026, by the following vote on roll call:

AYES COUNCILMEMBERS:

NOES COUNCILMEMBERS:

ABSENT COUNCILMEMBERS:

_____
MAYOR

ATTEST:

_____
City Clerk

COLLATERAL ANNEX
to the
WSPP AGREEMENT

This Collateral Annex to the WSPP Agreement together with the Cover Sheet Elections (collectively, the "Collateral Annex"), dated as of January 9, 2026, between City of Roseville ("Party A") and Triolith Energy Fund, LP ("Party B") (each a "Party" and, collectively, the "Parties"), is applicable to all transactions between the Parties conducted under the WSPP Agreement, including any amendments and annexes thereto agreed between the Parties (collectively, the "WSPP Agreement").

The Obligations of each Party to the other Party under the WSPP Agreement shall be secured in accordance with the provisions of this Collateral Annex, which sets forth the conditions under which a Party will be required to deliver Performance Assurance and the conditions under which a Party will be required to release and return Performance Assurance. To the extent there are any inconsistencies between the terms and conditions of the WSPP Agreement and this Collateral Annex, this Collateral Annex shall prevail. To the extent there are any inconsistencies between the terms and conditions of this Collateral Annex, excluding the Cover Sheet Elections, and the Cover Sheet Elections, the Cover Sheet Elections shall prevail.

1. Definitions.

For purposes of this Collateral Annex, the following terms have the meanings set forth below or in the provisions referred to below:

"Beneficiary Party" means, at any time, the Party entitled to receive, or that has received and is the beneficiary of, Performance Assurance provided by, or on behalf of, the Posting Party.

"Business Day(s)" has the meaning stated in section 4.1b of the WSPP Agreement.

"Cash" means U.S. dollars held by, or on behalf of, a Party as Performance Assurance and which shall be, for purposes of obtaining and perfecting a security interest hereunder, treated as "money" as defined in the UCC.

"Custodial Bank" means a Qualified Institution that has executed a Deposit Account Agreement.

"Collateral Annex" has the meaning stated in the introductory paragraph of this Collateral Annex.

"Collateral Threshold" means, with respect to a Party, the collateral threshold, if any, set forth in Part I of the Cover Sheet Elections for that Party, or if no amount is set forth for such Party, such amount shall be zero (0).

"Credit Rating" means, with respect to an entity other than a Qualified Institution, but including, as applicable, a Party or its Guarantor, as the case may be, on any date of determination: (a) the rating then assigned to such entity's (i) unsecured debt (such debt not supported by third-party credit enhancement) or (ii) if such rating in clause (i) is unavailable, its corporate credit rating, in each case as issued by Standard & Poor's ("S&P"), Moody's Investors

Service ("Moody's"), or Fitch, Inc. ("Fitch") or other rating agency or agencies to which the Parties may agree in writing, or (b) other such rating to which the Parties may agree in writing, and as further defined or described by the Parties in the Cover Sheet Elections. With respect to a Qualified Institution, "Credit Rating" refers to the ratings issued to the applicable commercial bank or trust company by S&P or Moody's. "S&P," "Moody's" and "Fitch" each includes its successors.

"Collateral Requirement" has the meaning stated in Section 4(c) of this Collateral Annex.

"Dealer" has the meaning stated in Section 4.2b of the WSPP Agreement except that no Party or any parent, subsidiary, or other affiliate of a Party shall be a Dealer for purposes of this Collateral Annex.

"Demand Notice" has the meaning given in Section 4(a) hereof.

"Deposit Account" means a demand, time, savings, passbook or similar account maintained with a Qualified Institution and subject to a Deposit Account Agreement, which Deposit Account shall, for purposes of obtaining and perfecting a security interest hereunder, be a "deposit account" as defined in UCC § 9-102.

"Deposit Account Agreement" is an agreement, executed by the Parties and a Custodial Bank with which the Deposit Account is or will be maintained under this Agreement, that provides the Beneficiary Party with control of the Deposit Account within the meaning of UCC § 9-104.

"Defaulting Party" has the meaning stated in Section 22.1 of the WSPP Agreement.

"Downgrade Event" has the meaning stated in Section 6(a)(iv) of this Collateral Annex.

"Downgraded Party" has the meaning stated in Section 6(a)(iv) of this Collateral Annex.

"Early Termination" means a termination of one or more transactions in accordance with Section 22.2 of the WSPP Agreement due to an Event of Default.

"Eligible Beneficiary Party" has the meaning stated in Section 6(a)(i) of this Collateral Annex.

"Event of Default" has the meaning stated in Section 22.1 of the WSPP Agreement as modified by Section 3 of this Collateral Annex.

"Guarantor" has the meaning stated in Section 4.7e of the WSPP Agreement and is the entity, if any, identified in Part I of the Cover Sheet Elections.

"Interest Rate" has the meaning stated in Part VI of the Cover Sheet Elections.

"LC Issuer" means (a) an entity having a capital surplus of at least one billion United States dollars ($1,000,000,000.00) and having a Credit Rating of at least (i) "A-" by S&P and "A3" by Moody's, if such entity is rated by S&P and Moody's, or (ii) "A-" by S&P or "A3" by Moody's, if such entity is rated by either S&P or Moody's, but not both, or (b) any other entity to which the Parties agree in the Cover Sheet Elections or otherwise in writing, provided, that the

Parties may agree to another definition of LC Issuer in Part VII of the Cover Sheet Elections or otherwise in writing, which other definition shall supercede the foregoing.

"Letter of Credit" means an irrevocable, non-transferable, standby letter of credit, issued by a LC Issuer in a form consistent with the Parties' agreements stated in Part VII of the Cover Sheet Elections and which letter of credit is otherwise reasonably acceptable to the Beneficiary Party.

"Letter of Credit Default" means with respect to an outstanding Letter of Credit and prior to the time such Letter of Credit is required to be canceled or returned to a Party in accordance with the terms of this Collateral Annex, the occurrence of any of the following events: (a) the issuer of the Letter of Credit has failed to satisfy the criteria of a LC Issuer under this Collateral Annex, the Cover Sheet Elections, or other agreements of the Parties, as applicable; (b) the LC Issuer has failed to comply with or perform its obligations under such Letter of Credit, including, but not limited to a failure to comply with a request to draw thereon in accordance with its terms; (c) the LC Issuer has disaffirmed, disclaimed, repudiated or rejected, in whole or in part, or challenged the validity of, such Letter of Credit; (d) such Letter of Credit has expired or terminated, or has failed or ceased to be in full force and effect at any time during the term of any transaction under the WSPP Agreement for which Performance Assurance is required to be kept in full force and effect hereunder, in any such case without replacement within three (3) Business Days following the date such Letter of Credit expired, terminated or failed or ceased to be in full force and effect; (e) the LC Issuer has initiated or become subject to, or any other party has initiated against LC Issuer (i) a bankruptcy, reorganization, moratorium, liquidation or similar insolvency proceeding under federal or state law, (ii) a similar proceeding for relief under any federal or state bankruptcy or insolvency law affecting creditor's rights, or (iii) a proceeding to liquidate or wind-up the business or affairs of the LC Issuer; (f) the LC Issuer makes an assignment for the benefit of creditors; or (g) the LC Issuer admits in writing its inability to pay its debts generally as they become due.

"Material Adverse Change" has the meaning stated, for the applicable Party, in Part II of the Cover Sheet Elections.

"Minimum Transfer Amount" means, with respect to a Party, the amount set forth in Part IV of the Cover Sheet Elections for such Party, or if no amount is filled in for such Party, such amount shall be zero (0).

"Non-Performing Party" has the meaning stated in Section 21.3 of the WSPP Agreement.

"Obligations" means, with respect to a Posting Party (a) all debts, liabilities and amounts due or that may become due from the Posting Party to the Beneficiary Party pursuant to (i) the WSPP Agreement, (ii) all outstanding Confirmation Agreements between the Parties under the WSPP Agreement, (iii) this Collateral Annex, (iv) any Security Agreement and (v) any other documents, instruments or agreements executed in connection therewith; and (b) all amounts owed under any modifications, renewals or extensions of the foregoing.

"Party" and "Parties" have the respective meanings stated in the introductory paragraph of this Collateral Annex.

"Performance Assurance" means collateral in the form of (i) Cash (whether posted directly with a Beneficiary Party or the Custodial Bank in a Deposit Account, (ii) a Letter of

Credit, or (iii) other security in form and subject to terms and conditions that are acceptable to the Beneficiary Party in its sole and absolute discretion. Interest payments on Cash held by a Beneficiary Party will constitute Performance Assurance in the form of Cash. Interest payments on Cash deposited into or otherwise held in a Deposit Account with a Custodial Bank will constitute a part of the Deposit Account held as Performance Assurance. For all purposes hereunder, Performance Assurance in the form of Cash is a margin payment within the meaning of the Bankruptcy Code, 11 U.S.C. § 101 et seq., including but not limited to sections 101(38), 362(b)(6), 546(e), 548(d), and 556 thereof.

"Posting Deadline" has the meaning given in Part VI of the Cover Sheet Elections.

"Posting Party" means, at any time, the Party required to post, or that has posted, Performance Assurance to, or for the benefit of, the Beneficiary Party.

"Potential Event of Default" means an event which, (a) with the giving of notice required under Section 22.1 of the WSPP Agreement, if any is required, and (b) the failure to remedy or cure under Section 22.1 of the WSPP Agreement, if remedy or cure is permitted, or both (a) and (b), would be an Event of Default.

"Qualified Institution" means (a) a commercial bank or trust company organized under the laws of the United States or Canada or a political subdivision thereof having a capital surplus of at least one billion United States dollars ($1,000,000,000.00) and having a Credit Rating of at least (i) "A-" by S&P and "A3" by Moody's, if such entity is rated by S&P and Moody's or (ii) "A-" by S&P or "A3" by Moody's, if such entity is rated by either S&P or Moody's, but not both, or (b) any other commercial bank or trust company, or other entity, to which the Parties agree in writing.

"Reduction Deadline" has the meaning given in Part VI of the Cover Sheet Elections.

"Replacement Letter of Credit" has the meaning given in Section 6(c) hereof.

"Replacement Performance Assurance" has the meaning given in Section 6(c) hereof.

"Rounding Amount" means, with respect to a Party, the amount, set forth in the Cover Sheet Elections for such Party, or if no amount is filled in for such Party, such amount shall be zero (0).

"Security Agreement" means a Security Agreement, which may be in the form attached hereto, applicable to Performance Assurance in a form other than Cash or a Letter of Credit.

"Termination Date" means the date on which the Beneficiary Party shall have received full and final payment of all of the Obligations.

"Termination Payment" means, for purposes of this Collateral Annex, the Termination Payment calculated under Section 22.3 of the WSPP Agreement.

"UCC" means the Uniform Commercial Code as in effect from time to time in the State of Utah, without regard to the conflicts of laws rules thereof, except to the extent that the perfection, the effect of perfection or nonperfection and the priority of the security interest granted hereunder, or remedies hereunder, are governed by the law of any jurisdiction other

than the State of Utah, the term UCC shall mean the Uniform Commercial Code of such other jurisdiction as necessary to give complete effect to this Collateral Annex.

"WSPP Agreement" has the meaning stated in the introductory paragraph of this Collateral Annex.

2. Encumbrance; Grant of Security Interest.

(a) As security for the prompt and complete payment and performance when due of a Party's Obligations now existing or hereafter arising, each Party hereby pledges, assigns, conveys and transfers to the other Party, and hereby grants to the other Party, a present and continuing security interest in and to, and a general first lien upon and right of set off against, all Performance Assurance which has been or may in the future be transferred to, or received by, the other Party or a Custodial Bank, for the benefit of such other Party, and all interest and other proceeds from time to time received or receivable in respect of, or in exchange for, any or all of the foregoing. Each Party agrees to take such action as the other Party reasonably requests in order to create and perfect the other Party's continuing security interest in, lien on, and right of setoff against, such Performance Assurance.

(b) The security interest created hereunder shall (i) remain in full force and effect until the security interest granted hereby is terminated in accordance with the second sentence of this Section 2(b), (ii) be binding upon the Posting Party, its successors and assigns and (iii) inure to the benefit of the Beneficiary Party and its successors, transferees and assigns. On the Termination Date, the security interest granted hereunder shall terminate and all rights to the Performance Assurance shall revert to the Posting Party. Upon such termination, the Beneficiary Party shall return all Performance Assurance in its possession or otherwise under its control to the Posting Party pursuant to Section 5(b) of this Collateral Annex and, at the Posting Party's expense, execute and deliver to the Posting Party such documents as the Posting Party shall reasonably request to evidence termination of the security interest.

(c) The security interest created hereunder is in addition to, and not in lieu of, any and all remedies that may be available under the WSPP Agreement.

(d) In the event a Party claims in any judicial proceeding that the grant set forth in Section 2(a) of this Collateral Annex is ineffective and fails to prevail on the claim, then that Party shall pay the other Party's reasonable attorneys fees incurred in defending against the claim.

3. Additional Events of Default.

The following event is added as an additional Event of Default under Section 22.1 of the WSPP Agreement and is incorporated therein for all purposes under this Collateral Annex:

(f) A Party fails to establish, maintain, transfer or extend Performance Assurance, or return Excess Performance Assurance, in any such case when required pursuant to the Parties' Collateral Annex.

4. Collateral Requirement.

(a) From time to time, on any Business Day prior to 1 p.m. New York time (but no more than once daily), the Beneficiary Party may demand by notice (each a "Demand Notice") that the Posting Party transfer Performance Assurance to or for the benefit of the Beneficiary Party, in an amount no less than the Collateral Requirement, provided that both conditions (i) and (ii) of this Section 4(a) are satisfied.

(i) No Event of Default has occurred and is continuing where the Beneficiary Party is the Defaulting Party and no Potential Event of Default exists where the Beneficiary Party is the potentially Defaulting Party;

(ii) No Early Termination has occurred or been designated with respect to such Beneficiary Party.

(b) After receiving a Demand Notice from the Beneficiary Party pursuant to Section 4(a) of this Collateral Annex, the Posting Party shall, by the Posting Deadline, transfer, or cause to be transferred to the Beneficiary Party or a Custodial Bank, as the case may be, Performance Assurance to, or for the benefit of, the Beneficiary Party, in an amount no less than the Collateral Requirement as defined in Section 4(c) of this Collateral Annex, provided, however, that a Posting Party shall not have an obligation to transfer Performance Assurance until the Collateral Requirement exceeds the Minimum Transfer Amount, at which time the Posting Party shall transfer the entire amount of the Collateral Requirement to the Beneficiary Party, and provided further, that if under this Collateral Annex each Party has an obligation to maintain Performance Assurance with respect to the other Party, the Parties' obligations to transfer Performance Assurance hereunder, including obligations to return Excess Performance Assurance under Section 5 of this Collateral Annex, at any time shall be determined on a net basis, and the Party with a net positive transfer obligation shall transfer Performance Assurance under this Section 4 in such amount.

(c) The "Collateral Requirement" is the amount calculated, as of the date of the Demand Notice, rounded up to the nearest integral multiple of the Rounding Amount, which is equal to *(x)* less *(y)*, but no less than zero, where:

(x) is

the Termination Payment, if any, that would be owed to the Beneficiary Party if the Posting Party were the Defaulting Party under Section 22.1 of the WSPP Agreement, plus

the damages, if any, solely under Section 21.3 of the WSPP Agreement that would be owed to the Beneficiary Party if the Posting Party were the Non-Performing Party, plus

any further and additional amounts due for rendered performance by the Beneficiary Party to the Posting Party under any WSPP Agreement transactions, whether or not invoiced or due, and

(y) is

the amount of Performance Assurance previously provided by or otherwise credited to the Posting Party for the benefit of the Beneficiary Party and not released as of the time the Beneficiary Party made the demand, plus

the Collateral Threshold applicable to the Posting Party.

(d) Any Letter of Credit shall be delivered to such address as the Beneficiary Party shall specify and any such demand made by the Beneficiary Party under this Section 4 shall specify account information for the account to which Performance Assurance in the form of Cash shall be delivered.

5. Reduction, Return, and Substitution of Performance Assurance.

(a) Reduction of Performance Assurance. From time to time, on any Business Day prior to 1 p.m. New York time (but no more than weekly with respect to Letters of Credit and daily with respect to Cash or a Deposit Account with the Custodial Bank), a Posting Party may demand that the Beneficiary Party reduce Performance Assurance in an amount equal to the Excess Performance Assurance as defined in this Section, provided, that the Posting Party shall not have any right to demand such reduction if on or prior to such Business Day, an Event of Default has occurred and is continuing where the Posting Party is the Defaulting Party, a Potential Event of Default exists where the Posting Party is the potentially Defaulting Party, or an Early Termination has occurred or been designated with respect to such Posting Party for which the Posting Party has not satisfied its Obligations. The Beneficiary Party shall comply with the demand by transferring, or causing the transfer of, Cash to the Posting Party or reducing the amount(s) of outstanding Letter(s) of Credit the Posting Party previously posted, provided, however, that a Beneficiary Party shall not have an obligation to transfer or cause the transfer of Excess Performance Assurance until the Excess Performance Assurance exceeds the Minimum Transfer Amount, at which time the Posting Party shall transfer the entire amount of the Excess Performance Assurance to the Posting Party. The Posting Party shall have the right to specify such means of compliance, provided, that it may specify Cash only to the extent that Excess Performance Assurance is in the form of Cash held by the Beneficiary Party or a Custodial Bank. If Excess Performance Assurance is returned by reducing the face amount of an outstanding Letter of Credit and the LC Issuer requires that the reduction be implemented through a cancellation of the existing Letter of Credit and the issuance of a new Letter of Credit with a reduced face amount, then (1) the Posting Party shall have delivered a new Letter of Credit to the Beneficiary Party in a form reasonably acceptable to the Beneficiary Party and in an amount that, when combined with the remaining amount of the then-current Performance Assurance, is not less than the then-current Collateral Requirement, and (2) in the event that an Event of Default occurs, as to which the Posting Party is the defaulting Party, between the Reduction Deadline and the date on which the new Letter of Credit is executed and delivered to the Beneficiary Party, the Beneficiary Party shall be entitled to draw from the existing Letter of Credit only an amount up to but not exceeding

the then-current Collateral Requirement. The cost and expense of compliance (including, but not limited to, the reasonable costs, expenses, and attorneys' fees of the Beneficiary Party and, if applicable, the LC Issuer or Custodial Bank) shall be the sole obligation of, and paid directly by, the Posting Party. If the Beneficiary Party pays any such cost or expense, the Posting Party shall reimburse the Beneficiary Party for each such cost and expense promptly following a demand for reimbursement. The Beneficiary Party shall comply with the demand on or before the Reduction Deadline. Any such demand made by the Posting Party under this Section 5(a) shall specify account information for the account to which Excess Performance Assurance in the form of Cash shall be delivered.

"Excess Performance Assurance" is an amount, calculated as of the date of the demand and rounded down to the nearest integral multiple of the Rounding Amount, which is equal to *(x)* less *(y)*, but no less than zero, where:

(x) is

the amount of Performance Assurance previously provided by or credited to the Posting Party for the benefit of the Beneficiary Party and not released as of the time the Posting Party made the demand, plus

the Collateral Threshold applicable to the Posting Party.

(y) is

the Termination Payment, if any, that would be owed to the Beneficiary Party if the Posting Party were the Defaulting Party under Section 22.1 of the WSPP Agreement, plus

the damages, if any, solely under Section 21.3 of the WSPP Agreement that would be owed to the Beneficiary Party if the Posting Party were the Non-Performing Party, plus

any further and additional amounts due for rendered performance by the Beneficiary Party to the Posting Party under any WSPP Agreement transactions, whether or not invoiced or due.

The foregoing notwithstanding, if under this Collateral Annex each Party has an obligation to maintain Performance Assurance with respect to the other Party, the Parties' obligations to transfer Performance Assurance hereunder, including obligations to post Performance Assurance under Section 4 of this Collateral Annex, at any time shall be determined on a net basis, and the Party with a net positive transfer obligation shall transfer Performance Assurance under this Section 5(a) in such amount.

(b) Return of All Performance Assurance. No later than one (1) Business Day after the last to occur of (i) the Termination Date, and (ii) (A) completion of all outstanding transactions between the Parties under the WSPP Agreement or (B) if all such outstanding transactions have not been completed, then payment by

the Posting Party of all amounts due to the Beneficiary Party under Sections 21 and 22 of the WSPP Agreement with respect to uncompleted transactions, the Beneficiary Party shall return all outstanding Performance Assurance to the Posting Party less any amounts applied to the satisfaction of any of the Posting Party's Obligations.

(c) Substitution of Performance Assurance. Unless (i) an Event of Default has occurred and is continuing where the Posting Party is the Defaulting Party, (ii) a Potential Event of Default exists where the Posting Party is the potentially Defaulting Party, or (iii) an Early Termination has occurred or been designated with respect to the Posting Party pursuant to which the Posting Party has not satisfied all Obligations, the Posting Party may substitute Performance Assurance for existing Performance Assurance of equal value. The Posting Party must give notice of the substitution to the Beneficiary Party two (2) Business Days before the substitution is intended to occur no later than 5 p.m. New York time. The notice must specify whether the substitute Performance Assurance is Cash or a Letter of Credit and if the latter it shall include a draft thereof. If the substitute Performance Assurance is Cash or a Letter of Credit (in form consistent with this Collateral Annex), then the Posting Party may effect the substitution no earlier than two, and no later than five (5), Business Days after giving such notice. If the substitute Performance Assurance is not Cash or a Letter of Credit (in form consistent with this Collateral Annex), the substitution shall not be made unless the Beneficiary Party consents in writing thereto. No later than one Business Day after the Beneficiary Party receives substitute Performance Assurance in accordance with this Section, the Beneficiary Party shall transfer the Performance Assurance that has been replaced to the Posting Party. Notwithstanding anything herein to the contrary, no such substitution shall be permitted unless after giving effect to such substitution, the value of such substitute Performance Assurance shall equal the greater of the Posting Party's Collateral Requirement or the Posting Party's Minimum Transfer Amount. The substituted Performance Assurance shall be subject to and governed by the terms and conditions of this Collateral Annex.

6. Administration of Performance Assurance.

(a) Cash held by Beneficiary Party.

(i) Conditions Under Which A Beneficiary Party Is Entitled To Hold Cash. A Beneficiary Party shall be an "Eligible Beneficiary Party" entitled to hold Performance Assurance in the form of Cash if, and for only so long as, all of the following conditions (w), (x), (y) and (z) are satisfied:

(w) The Parties have agreed in the Cover Sheet Elections or otherwise in writing that the Beneficiary Party may hold Performance Assurance in the form of Cash.

(x) If the Cover Sheet Elections permit the Posting Party unilaterally to rescind the Parties' agreement that the Beneficiary Party shall be entitled to hold Performance Assurance in the form of Cash, the Posting Party has not rescinded such agreement.

(y) A Material Adverse Change with respect to the Beneficiary Party has not occurred.

(z) The Beneficiary Party, the Posting Party, and a Custodial Bank have executed a Deposit Account Agreement, provided, that the Beneficiary Party is not required to place any Performance Assurance in the form of Cash in the Custodial Bank under such agreement except in the event of a cessation of Eligible Beneficiary Party status under Section 6(a)(iv) of this Collateral Annex.

(ii) Eligible Beneficiary Party's Use Of Cash. An Eligible Beneficiary Party shall be entitled to hold Performance Assurance in the form of Cash in any accounts it holds in the United States, and, notwithstanding anything to the contrary in UCC § 9-207, an Eligible Beneficiary Party shall also have the right to sell, pledge, rehypothecate, assign, invest, use, commingle or otherwise use in its business any Cash that it holds as Performance Assurance hereunder, free from any claim or right of any nature whatsoever of the Posting Party except for the Posting Party's rights under (A) Section 5(a), (b), and (c) of this Collateral Annex (reduction, return or substitution of Performance Assurance), (B) Section 6(a)(iv) (cessation of Eligible Beneficiary Party status), and (C) Section 8 of this Collateral Annex (Event of Default or Early Termination).

(iii) Appointment of Agent. The Eligible Beneficiary Party may, but is not required, to appoint an agent to hold Performance Assurance in the form of Cash on its behalf and to receive additional Performance Assurance. In the event an Eligible Beneficiary Party makes such an appointment, it must give notice to the Posting Party including the identity and address of the agent, no later than one (1) Business Day after the deposit. Upon the receipt of such notice, the Posting Party's obligations to make any transfer will be discharged by making the transfer to the agent. The Eligible Beneficiary Party may use Cash held by an agent in accordance with Section 6(a)(ii) of this Collateral Annex, subject to the Posting Party's rights referred to therein.

(iv) Cessation Of Eligible Beneficiary Party Status. The Beneficiary Party shall cease to be an Eligible Beneficiary Party immediately upon the failure of any one of conditions (w), (x), (y) or (z) of Section 6(a)(i) at any time (each a "Downgrade Event"), and thereafter such Beneficiary Party shall be considered a "Downgraded Party." Failure of (x) shall occur upon the Posting Party's giving notice to the Beneficiary Party of its rescission of the Parties' agreement that the Beneficiary Party shall be entitled to hold Performance Assurance in the form of Cash. A Downgraded Party shall transfer, or cause its agent to transfer, no later than the close of the next Business Day following the occurrence of the Downgrade Event, all Performance Assurance in the form of Cash to the Custodial Bank and all such Cash shall be maintained in a Deposit Account in accordance with Section 6(b) of this Collateral Annex and the terms and conditions of the Deposit Account Agreement. Upon the occurrence of a Downgrade Event, Section 6(a)(ii) concerning the Eligible Beneficiary Party's rights to use Cash shall cease to apply. After the occurrence of a Downgrade Event, a Downgraded Party shall not become an Eligible Beneficiary Party except upon the written agreement of the Posting Party. Nothing in this Section

6(a) shall diminish the Posting Party's rights under Section 8 of this Collateral Annex.

(v) Interest Payments On Cash. So long as no (i) Event of Default has occurred and is continuing where the Posting Party is the Defaulting Party or (ii) no Early Termination has occurred or been designated with respect to the Posting Party pursuant to which the Posting Party has not satisfied all of its Obligations, then, the Eligible Beneficiary Party will pay to the Posting Party, in lieu of any other amounts paid, earned, or deemed to have been paid or earned, with respect to such Cash (all of which may be retained by the Eligible Beneficiary Party), interest in amounts calculated in accordance with the Interest Rate. The Posting Party shall submit an invoice to the Beneficiary Party on the first Business Day of each month for interest due for the prior month, and shall set forth such calculation therein. The Eligible Beneficiary Party shall make payment thereof of any interest due to the Posting Party by the later of the next Business Day after submittal of the invoice. The Beneficiary Party shall determine in its sole discretion whether the method of payment shall be (a) an increase in the Performance Assurance credited to the Posting Party in an amount equal to any interest due, or (b) a transfer of funds to the Posting Party equal to any interest due.

(b) Cash Held By Custodial Bank.

(i) Conditions Under Which Cash Shall Be Held By Custodial Bank. The Custodial Bank shall hold Performance Assurance in the form of Cash if either of the following conditions is satisfied:

(x) The Parties have not agreed in the Cover Sheet Elections or otherwise in writing that the Beneficiary Party may hold Performance Assurance in the form of Cash.

(y) A Downgrade Event has occurred such that an Eligible Beneficiary Party has become a Downgraded Party.

(ii) Use Of Cash. In the event the Custodial Bank holds Performance Assurance in the form of Cash under this Section 6(b), the Beneficiary Party shall have no right to use or receive Performance Assurance in the form of Cash held by the Custodial Bank except, if an Event of Default has occurred where the Posting Party is the Defaulting Party or an Early Termination has occurred or been designated with respect to such Posting Party for which the Posting Party has not satisfied Obligations, then the Beneficiary Party shall have a right to receive Cash in payment of the Posting Party's Obligations. The Custodial Bank shall hold and disburse Performance Assurance in the form of Cash in accordance with the terms of this Collateral Annex and for the security interest and benefit of the Beneficiary Party and, subject solely to such security interest, for the ownership of the Posting Party. Performance Assurance in the form of Cash shall be held in a Deposit Account (A) designated for the ownership of the Posting Party, (B) controlled by the Beneficiary Party in accordance with the terms of the Deposit Account Agreement, and (C) designated for the security interest and benefit of the Beneficiary Party under this Collateral Annex and the Deposit Account Agreement.

(iii) Interest Payments On Cash. So long as no (i) Event of Default has occurred and is continuing where the Posting Party is the Defaulting Party and (ii) no Early Termination has occurred or been designated with respect to such Posting Party for which the Posting Party has not satisfied Obligations, then, the Custodial Bank, on behalf of the Beneficiary Party will pay to the Posting Party, in lieu of any other amounts paid, earned, or deemed to have been paid or earned, with respect to such Cash, interest in amounts calculated and paid in accordance with the Deposit Account Agreement or otherwise agreed by the Custodial Bank and Parties in writing. Payment shall be made by increasing the Performance Assurance credited to the Posting Party in an amount equal to any interest due, unless the Beneficiary Party instructs the Custodial Bank to make payment by transferring funds to the Posting Party in an amount equal to any interest due.

(iv) Other Conditions. All terms and conditions stated in the Deposit Account Agreement as they apply to the Parties are incorporated into this Collateral Annex.

(c) Letters of Credit. Performance Assurance provided in the form of a Letter of Credit shall be subject to the following provisions, provided, that nothing in this Section 6(c) is intended to modify any terms and conditions contained in any Letter of Credit that apply to draws thereon and it is recognized that the Parties may agree to additional terms and conditions not stated herein.

(i) The Posting Party shall maintain for the benefit of the Beneficiary Party any Letter of Credit provided as Performance Assurance in accordance with Section 4 of this Collateral Annex. The Posting Party shall *(a)* renew or cause the renewal of each outstanding Letter of Credit not less than thirty (30) days prior to its expiration in accordance with the terms contained in the applicable Letter of Credit, *(b)* if the LC Issuer has indicated its intent not to renew such Letter of Credit, provide either (1) a Letter of Credit issued by a Qualified Institution in the same face amount and on substantially the same terms as the outstanding Letter of Credit (each, a "Replacement Letter of Credit") or (2) Performance Assurance in the form of Cash equal to the face amount of such outstanding Letter of Credit in a form acceptable to the Beneficiary Party ("Replacement Performance Assurance"), in each case at least twenty (20) days prior to the expiration of the applicable Letter of Credit, and *(c)* if the LC Issuer shall fail to honor the Beneficiary Party's request to draw on an outstanding Letter of Credit in accordance with the terms thereof, provide for the benefit of the Beneficiary Party either (1) a Replacement Letter of Credit or (2) Replacement Performance Assurance, in each case within two (2) Business Days after such refusal, provided, that, as a result of the Posting Party's failure to perform in accordance with *(a)*, *(b)*, or *(c)* above, the Posting Party's Collateral Requirement would be greater than zero. The foregoing notwithstanding, the Beneficiary Party may reject a Replacement Letter of Credit that conforms to the requirements of this Section if in the Beneficiary Party's sole discretion acceptance of additional credit from the applicable LC Issuer would be an unacceptable credit risk due to other commitments it had accepted from such LC Issuer, provided, that in the event of such rejection, the Beneficiary Party shall pay any costs incurred by the Posting Party in obtaining a Replacement Letter of Credit from a different LC Issuer. Rejection of a Replacement Letter of Credit under the immediately prior sentence shall not relieve a Posting Party of its

obligations to maintain adequate Performance Assurance at all times under this Collateral Annex.

(ii) Upon the occurrence of a Letter of Credit Default, the Posting Party shall deliver to the Beneficiary Party either a Replacement Letter of Credit or Replacement Performance Assurance, in each case on or before the first Business Day after the occurrence thereof (or the fifth (5th) Business Day after the occurrence thereof if only clause (a) under the definition of Letter of Credit Default applies), in such amounts that on the day such Replacement Letter of Credit or Replacement Performance Assurance is provided the Collateral Requirement is zero.

(iii) Upon or at any time after the occurrence of an Event of Default that is continuing where the Posting Party is the Defaulting Party, or if an Early Termination has occurred or been designated with respect to the Posting Party pursuant to which the Posting Party has not satisfied all of its Obligations, then the Beneficiary Party may draw on the entire, undrawn portion of any outstanding Letter of Credit in accordance with its terms. Notwithstanding the Beneficiary Party's receipt of Cash under the Letter of Credit, the Posting Party shall remain liable for any failure to transfer sufficient Performance Assurance and for any Obligations owing to the Beneficiary Party and remaining unpaid after the application of the amounts so drawn by the Beneficiary Party.

(iv) In all cases, the costs and expenses (including but not limited to the reasonable costs, expenses, and attorneys' fees of the Beneficiary Party) of establishing, renewing, substituting, reissuing, canceling, and increasing the face amount of (as the case may be) a Letter of Credit shall be paid by the Posting Party, or if paid by the Beneficiary Party, promptly reimbursed by the Posting Party following the Beneficiary Party's demand for reimbursement.

(d) Performance Assurance in Forms Other than Cash or Letters of Credit. The Parties may agree that a Party may provide Performance Assurance in forms other than Cash or Letters of Credit, and may agree to additional terms and conditions respecting such Performance Assurance.

(e) Care of Performance Assurance. Except for duties to comply with all requirements concerning Performance Assurance stated herein, the Beneficiary Party shall have no duty as to any Performance Assurance in its possession or control or in the possession or control of any Custodial Bank or any income thereon or as to the preservation of rights against prior parties or any other rights pertaining thereto. The Eligible Beneficiary Party shall not be liable or responsible for any diminution in the value of Performance Assurance by reason of the act or omission of a Custodial Bank. Unless held by a Custodial Bank and except as required under Section 6(a)(iv) of this Collateral Annex, the Beneficiary Party, or its agent appointed under Section 6(a)(iii), shall at all times retain possession or control of Performance Assurance delivered to it. To the extent if any that this Section 6(e) is inconsistent with UCC § 9-207, this Section 6(e) shall control.

7. Beneficiary Party's Exercise of Rights Concerning Performance Assurance.

(a) In the event that *(x)* an Event of Default has occurred and is continuing where the

Posting Party is the Defaulting Party or *(y)* an Early Termination has occurred or been designated with respect to the Posting Party for which the Posting Party has not satisfied all of its Obligations, the Beneficiary Party may exercise any one or more of the rights and remedies provided under the WSPP Agreement, under this Collateral Annex or as otherwise may be available under applicable law. Without limiting the foregoing, if at any time *(x)* or *(y)* has occurred, then the Beneficiary Party may, in its sole discretion, declare all Obligations immediately due and payable without presentment, demand, notice, protest or other formalities of any kind (all of which are hereby expressly waived by the Posting Party) and exercise any one or more of the following rights and remedies:

(i) All rights and remedies available to the Beneficiary Party under UCC Article 9 or the uniform commercial code of any jurisdiction in which the Performance Assurance is being held and any other applicable jurisdiction and other applicable laws with respect to the preservation of or foreclosure upon collateral.

(ii) The right to set off any Performance Assurance held by or for the benefit of the Beneficiary Party against and in satisfaction of any amount payable by the Posting Party in respect of any of its Obligations.

(iii) The right to draw the full undrawn face amount of each outstanding Letter of Credit issued for its benefit.

(iv) The right to instruct the Custodial Bank to transfer all Performance Assurance held in a Deposit Account to an account of the Beneficiary Party or otherwise to or for the benefit of the Beneficiary Party.

(v) The right to liquidate any Performance Assurance held by or for the benefit of the Beneficiary Party, free from any claim or right of any nature whatsoever of the Posting Party, and to apply the proceeds received following the exercise of the rights and remedies set forth above as follows (A) first, to the payment of (1) all costs and expenses relating to the sale of any Performance Assurance and collection of amounts owing hereunder, including reasonable attorneys' fees and disbursements and the just compensation of the Beneficiary Party for services rendered in connection therewith or in connection with any proceeding to sell if a sale is not completed, and (2) all charges, expenses and advances incurred or made by the Beneficiary Party in order to protect the lien provided under this Collateral Annex; (B) second, to the payment in full of all of the Obligations owed to the Beneficiary Party hereunder in such order as the Beneficiary Party may elect; and (C) third, the balance, if any, shall be paid to the Posting Party.

(b) The Posting Party hereby irrevocably constitutes and appoints the Beneficiary Party and any officer or agent thereof, with full power of substitution, as the Posting Party's true and lawful attorney-in-fact (which appointment shall be coupled with an interest) with full irrevocable power and authority to act in the name, place and stead of the Posting Party or in the Beneficiary Party's own name, from time to time in the Beneficiary Party's discretion, solely for the purpose of taking any and all action and executing and delivering any and all

documents or instruments which may be necessary or desirable to accomplish the purposes of Section 7(a). Notwithstanding the foregoing, the Beneficiary Party shall not be obligated to exercise any right or duty as attorney-in-fact, and shall have no duties to the Posting party in connection therewith.

(c) The Posting Party shall in all events remain liable to the Beneficiary Party for any amount payable by the Posting Party in respect of any of its Obligations remaining unpaid after any such liquidation, application and set off and the Beneficiary Party shall have the right to proceed against the Posting Party for any such deficiency.

8. Posting Party's Exercise of Rights Concerning Performance Assurance.

If at any time *(a)* an Event of Default has occurred and is continuing where the Beneficiary Party is the Defaulting Party, or *(b)* an Early Termination has occurred or been designated with respect to the Beneficiary Party for which the Beneficiary Party has not satisfied all of its Obligations, then:

(i) on the day of such occurrence, the Beneficiary Party will be obligated to transfer all Performance Assurance (including any Letter of Credit) and interest in amounts calculated in accordance with the Interest Rate, if any, to the Posting Party;

(ii) the Posting Party may do any one or more of the following: *(a)* exercise any of the rights and remedies of a pledgor with respect to the Performance Assurance, including any such rights and remedies under law then in effect; *(b)* to the extent that Performance Assurance is not transferred to the Posting Party as required in (i) above, setoff amounts payable to the Beneficiary Party against the Performance Assurance (other than Letters of Credit) held by the Beneficiary Party or to the extent its rights to setoff are not exercised, withhold payment of any remaining amounts payable by the Posting Party, up to the value of any Performance Assurance that has not been so transferred, until the Performance Assurance is transferred to the Posting Party; *(c)* exercise rights and remedies available to the Posting Party under the terms of any Letter of Credit; and *(d)* exercise any applicable rights and remedies available to the Posting Party under the WSPP Agreement; and

(iii) the Beneficiary Party shall be prohibited from drawing on any Letter of Credit that has been posted by the Posting Party for its benefit.

9. Disputed Calculations.

If a Party shall dispute the Collateral Requirement determined by the Beneficiary Party or the Excess Performance Assurance determined by the Posting Party and such dispute relates to the Termination Payment calculated by the other Party under Section 22.1 of the WSPP Agreement or damages calculation under Section 21.3 of the WSPP Agreement, then the Party contesting the Termination Payment calculation or damages calculation shall:

(i) notify the other Party of the existence and nature of the dispute not later than 4 p.m. New York Time on the same day a Party has demanded additional

Performance Assurance under Section 4 of this Collateral Annex or the return of Excess Performance Assurance under Section 5 of this Collateral Annex;

(ii) if a Beneficiary Party has demanded that the Posting Party provide Performance Assurance under Section 4, the Posting Party shall provide Performance Assurance to satisfy its Collateral Requirement based upon the Beneficiary Party's estimate, made in good faith and in a commercially reasonable manner, of the Termination Payment if the Posting Party were the Defaulting Party under Section 22.1 of the WSPP Agreement and the damages under Section 21.3 of the WSPP Agreement if the Posting Party were required to pay such damages; and

(iii) if a Posting Party has demanded that the Beneficiary Party return Excess Performance Assurance under Section 5, the Beneficiary Party shall return Excess Performance Assurance based upon the Beneficiary Party's estimate, made in good faith and in a commercially a commercially reasonable manner, of the Termination Payment if the Posting Party were the Defaulting Party under Section 22.1 of the WSPP Agreement and the damages under Section 21.3 of the WSPP Agreement if the Posting Party were required to pay such damages.

In all such cases, the Parties thereafter shall promptly negotiate in good faith in order to reconcile the dispute or a method for resolving the dispute. If the Parties fail to resolve the dispute on or before the first Business Day following the date that the demand is made by the Party contesting the Termination Payment calculation or the damages calculation, then such Termination Payment or damages calculation shall be determined based upon quotations from Dealers in energy contracts. Each Party may obtain up to a maximum of four (4) quotations which must be provided to the other Party on the same day as the demand, if the demand is made no later than 2 p.m. New York Time, or the next Business Day, if the demand is made after 2 p.m. Eastern Time. These quotations shall reflect transacted prices in comparable contracts. The Termination Payment or damages calculation shall equal a simple average of the quotations obtained and provided by the Parties consistent with the provisions of this Section 9. Each Party providing quotations to the other Party also shall identify to the other Party the Dealer(s) who provided each of the quotations to allow verification. Performance Assurance shall thereupon be provided, or Excess Performance returned, as the case may be, on the next Business Day after provision to the Posting Party of the recalculation, in accordance with the results of such recalculation. The results of this process shall be enforceable in a court of law unless fraudulent.

10. <u>Covenants; Representations and Warranties; Miscellaneous</u>.

(a) The Posting Party will execute and deliver to the Beneficiary Party (and to the extent permitted by applicable law, the Posting Party hereby authorizes the Beneficiary Party to execute and deliver, in the name of the Posting Party or otherwise) such financing statements, assignments and other documents and do such other things relating to the Performance Assurance and the security interest granted under this Collateral Annex including any action the Beneficiary Party may deem necessary or appropriate to perfect or maintain perfection of its security interest in the Performance Assurance, and the Posting Party shall pay all costs relating to its delivery of Performance Assurance and the maintenance and perfection of the security interest therein.

(b) On each day on which Performance Assurance is held under this Collateral Annex by the Beneficiary Party and/or its agent, or by the Custodial Bank under the Deposit Account Agreement, the Posting Party hereby represents and warrants that:

(i) the Posting Party has good and marketable title to and is the sole owner of such Performance Assurance, and the execution, delivery and performance of the covenants and agreements of this Collateral Annex, do not result in the creation or imposition of any lien or security interest upon any of its assets or properties, including, without limitation, the Performance Assurance, other than the security interests and liens created under the WSPP Agreement and this Collateral Annex;

(ii) upon the transfer of Performance Assurance by the Posting Party to the Beneficiary Party, its agent, or the Custodial Bank for the benefit of the Beneficiary Party, the Beneficiary Party shall have a valid and perfected first priority continuing security interest therein, free of any liens, security interests, claims or encumbrances, except those liens, security interests, claims or encumbrances arising by operation of law that are given priority over a perfected security interest;

(iii) it is not and will not become a Party to or otherwise be bound by any agreement, other than the WSPP Agreement and this Collateral Annex, or amendments thereto, which restricts in any manner the rights of any present or future holder of any of the Performance Assurance with respect hereto; and

(iv) No approval or authorization by, and no filing with or consent of, any federal, state, local, municipal or other government agency, department or regulatory authority is required either (A) for the grant by the Posting Party of the liens granted hereby or for the execution, delivery or performance of this Collateral Annex by the Posting Party or (B) for the perfection (except for filing of any financing statements in the jurisdictions identified in writing by the Posting Party) of the liens created hereby or the exercise by the Beneficiary Party of the rights and remedies hereunder.

(c) This Collateral Annex has been and is made solely for the benefit of the Parties and their permitted successors and assigns, and no other person, partnership, association, corporation, or other entity shall acquire or have any right thereunder or by virtue of this Collateral Annex.

(d) Each Party represents and warrants to the other Party that (i) it has all requisite power and authority to execute and deliver this Collateral Annex, to consummate the transactions contemplated hereby and to perform its respective obligations hereunder; (ii) it has taken all necessary action to authorize the execution, delivery and performance of this Collateral Annex and (iii) this Collateral Annex has been duly executed and delivered and, when executed and delivered by the other Party, will constitute the legal, valid and binding obligation of such Party enforceable against it in accordance with its terms except as such enforcement may be limited by bankruptcy, insolvency, moratorium or similar laws affecting the rights of creditors generally or by general equitable principles (regardless of

whether enforcement is sought in a proceeding in equity or at law). Each Party, at the time of execution, shall provide the other Party with evidence of such authority reasonably acceptable to the other Party, including, if the Collateral Annex is executed by an officer, a certificate of incumbency, and, if requested by the other Party, a written opinion of counsel (the opinion of a Party's in-house counsel shall suffice), in such form as is reasonably acceptable to the other Party, that person who executed this Collateral Annex was duly authorized in accordance with all actions requisite to establish such authority.

(e) As of the date a Party executes this Collateral Annex, the Cover Sheet Elections, Deposit Account Agreement, or Security Agreement, or any amendment thereto, such Party is a member in good standing of WSPP, Inc.

(f) Section 34 of the WSPP Agreement is inapplicable to any disputes concerning the enforcement of this Collateral Annex or the rights and obligations set forth herein concerning Performance Assurance. In the event litigation is commenced by either Party to enforce this Collateral Annex or collect any amounts required to be paid, provided or transferred hereunder, each Party agrees to pay the other Party for all reasonable attorneys fees, disbursements, and court costs incurred by the prevailing Party in such litigation.

(g) No delay or forbearance by any Party or its agents in exercising any right, power, privilege, or remedy accruing to such Party upon the occurrence of any breach or default by the other Party under this Collateral Annex, and no course of dealing between the Parties, shall impair any such right, power or remedy of the non-defaulting Party, nor shall it be construed to be a waiver of any such breach or default, or an acquiescence therein, or of any similar breach or default thereafter occurring, nor shall any waiver of any single breach or default be deemed a waiver of any other breach or default theretofore or thereafter occurring. Any waiver, permit, consent or approval of any kind or character on the part of a Party of any such breach or default under this Collateral Annex, or any waiver on the part of any non-defaulting Party hereto of any provision or condition of this Collateral Annex, must be in writing and shall be effective only to the extent specifically set forth in such writing. This Collateral Annex may be amended only by a document executed by the Parties.

(h) Each demand, notice, consent, agreement, approval or other communication required or permitted to be given from one Party to the other Party under this Collateral Annex shall be provided in writing (unless expressly provided otherwise) and shall be submitted by recognized overnight courier service or telefacsimile addressed to the recipient Party at its address or telefacsimile number set forth in Part VIII of the Cover Sheet Elections or as changed by notice to the other Party. All such notices, requests, demands, approvals and other communications shall be deemed to have been duly given, received and effective when: (a) received if personally delivered; (b) on the day transmitted (unless transmitted after 5:00 p.m. at the place of receipt or on a day that is not a Business Day, in which case it shall be deemed received on the next Business Day), if transmitted by facsimile transmission and the sender's facsimile machine has received the correct answerback of the addressee and confirmation of uninterrupted transmission by a transmission report or the recipient confirming by telephone to sender that he has received the facsimile message; (c) the day

immediately following the day it is sent, if sent for next day delivery to a domestic address by a nationally-recognized overnight courier or delivery service; (d) on the day of receipt, if sent by certified or registered mail, return receipt requested; and (e) on the date actually received, if sent or delivered by any other means; provided, that any notice, demand, request or other communication made or delivered in connection with an alleged breach or default hereunder (including an Event of Default) shall only be delivered personally or by a nationally-recognized overnight courier or delivery service. Whenever this Collateral Annex provides that a demand, notice, consent, agreement, approval or other communication shall be provided in "writing" or shall be provided in "written" form, such demand, notice, consent, agreement, approval or other communication shall only be effective hereunder if provided by a manually signed original, photocopy or telefacsimile copy from the Party or Parties to be bound thereby.

(i) The headings in this Collateral Annex are for convenience of reference only, and shall not affect the meaning or construction of any provision thereof.

(j) This Collateral Annex shall be governed by, and construed and interpreted in accordance with, the laws of the State of Utah, except to the extent that the perfection, the effect of perfection or nonperfection and the priority of the security interest granted hereunder, or remedies hereunder, are governed by provisions of the UCC, including but not limited to UCC §§ 9-301, 9-303, 9-304, 9-305, 9-306 and 9-307, that may call for the application of the laws of jurisdictions other than the State of Utah.

(k) This Collateral Annex may be executed in one or more counterparts, all of which, when taken together, shall constitute one and the same instrument and each of the Parties hereto may execute this Collateral Annex by signing any such counterpart.

IN WITNESS HEREOF, the Parties have caused this Collateral Annex to be duly executed effective as of the date first written above.

Party A	**Party B**
City of Roseville	Triolith Energy Fund, LP
_____	_____
[Sign here]	[Sign here]
_____	Scott Adair
[Print name]	[Print name]
_____	Chief Executive Officer
Title	Title
Date: _____	Date: 01/09/2026

COVER SHEET ELECTIONS
applicable to the
COLLATERAL ANNEX
to the
WSPP AGREEMENT

This Cover Sheet Elections applicable to the Collateral Annex to the WSPP Agreement ("Cover Sheet Elections") between the Parties dated as of January 9, 2026 is between:

City of Roseville ("Party A") and
Triolith Energy Fund, LP ("Party B").

This Cover Sheet Elections sets forth the Parties' agreements to supplement the Collateral Annex and, as the Parties may determine, vary the terms and conditions of the Collateral Annex. To the extent there are any inconsistencies between the terms and conditions of the Collateral Annex, excluding the Cover Sheet Elections, and these Cover Sheet Elections, the Cover Sheet Elections shall prevail.

Terms that are capitalized for reasons other than grammatical reasons shall have the meanings assigned to them in Section 1 of the Collateral Annex.

The Collateral Threshold, Interest Rate, Minimum Transfer Amount and Rounding Amount, shall each be zero (0) unless a different amount is stated below.

I. Collateral Threshold.

Explanatory note: The Beneficiary Party's exposure due to the other Party's failure to perform a WSPP Agreement transaction is the sum of (a) the Termination Payment under WSPP Agreement 22, (b) damages under WSPP Agreement § 21.3, and (c) any further and additional amounts due for rendered performance by the Beneficiary Party to the Posting Party, whether or not invoiced. The Collateral Threshold is the portion, if any, of this exposure that the Parties agree in this Cover Sheet Elections will not be secured with Performance Assurance.

A. Party A Collateral Threshold.

Name of Party A Guarantor, if applicable:
Not Applicable ("Party A Guarantor")

If a Guarantor is identified, then all references to Party A shall include Party A Guarantor unless otherwise indicated and Party A shall be deemed to have the Credit Rating of Party A Guarantor.

☐ The Collateral Threshold for Party A shall be $_____; provided, however, that the Collateral Threshold shall be zero in the event of a Material Adverse Change as defined in Part II hereof with respect to Party A.

☒ The Collateral Threshold for Party A shall be (a) the amount set forth in the chart below under the heading "Collateral Threshold" opposite the Credit Rating for Party A on the relevant date of determination, and if such Credit Ratings shall not be equivalent, the lower Credit Rating shall govern, or (b) zero if on the relevant date of determination none of the rating agencies

specified below has a Credit Rating in effect with respect to Party A or in the event of a Material Adverse Change as defined in Part II hereof with respect to Party A:

S&P	***Moody's***	***Threshold***
A- and above	**A3 and above**	**$25,000,000.00**
BBB+	**Baa1**	**$15,000,000.00**
BBB	**Baa2**	**$10,000,000.00**
BBB-	**Baa3**	**$2,500,000.00**
BBB- and below	**Baa3 and below**	**$ 0 (zero)**

☐ The Collateral Threshold for Party A shall be (a) the amount set forth in the chart above under the heading "Collateral Threshold" opposite the Credit Rating for Party A on the relevant date of determination, and if such Credit Ratings shall not be equivalent, the higher two Credit Ratings shall govern, or (b) zero if on the relevant date of determination none of the rating agencies specified below has a Credit Rating in effect with respect to Party A or in the event of a Material Adverse Change with respect to Party A.

☐ The Collateral Threshold for Party A shall be the amount of the Guaranty Agreement dated _____ from Party A Guarantor, as amended from time to time, but in no event shall Party A's Collateral Threshold be greater than $_____.

B. Party B Collateral Threshold.

Name of Party B Guarantor, if applicable:
Not Applicable ("Party B Guarantor")

If a Guarantor is identified, then all references to Party B shall include Party B Guarantor unless otherwise indicated and Party B shall be deemed to have the Credit Rating of Party B Guarantor.

☒ The Collateral Threshold for Party B shall be $0; provided, however, that the Collateral Threshold shall be zero in the event of a Material Adverse Change as defined in Part II hereof with respect to Party B.

☐ The Collateral Threshold for Party B shall be (a) the amount set forth in the chart below under the heading "Collateral Threshold" opposite the Credit Rating for Party B on the relevant date of determination, and if such Credit Ratings shall not be equivalent, the lower Credit Rating shall govern, or (b) zero if on the relevant date of determination none of the rating agencies specified below has a Credit Rating in effect with respect to Party B or in the event of a Material Adverse Change as defined in Part II hereof with respect to Party B:

☐ The Collateral Threshold for Party B shall be (a) the amount set forth in the chart above under the heading "Collateral Threshold" opposite the Credit Rating for Party B on the relevant date of determination, and if such Credit Ratings shall not be equivalent, the higher two Credit Ratings shall govern, or (b) zero if on the relevant date of determination none of the rating agencies specified below has a Credit Rating in effect with respect to Party B or in the event of a Material Adverse Change with respect to Party B.

☐ The Collateral Threshold for Party B shall be the amount of the Guaranty Agreement dated _____ from Party B Guarantor, as amended from time to time, but in no event shall Party B's Collateral Threshold be greater than $_____.

II. Material Adverse Change.

A. Party A

A Material Adverse Change shall occur with respect to Party A in the following circumstances:

☐ (i) Its Credit Rating falls below ____ by S&P or ____ by Moody's; or (ii) it is given an "issuer rating" by S&P below _____ or by Moody's below ____; or (iii) it has no Credit Rating by either S&P or Moody's.

☐ Party A's creditworthiness, financial responsibility, or performance viability has become unsatisfactory to Party B in Party B's reasonably exercised discretion with regard to a transaction between the Parties conducted under the WSPP Agreement.

☒ An Event of Default shall have occurred and is continuing where Party A is the Defaulting Party, or a Potential Event of Default has occurred where Party A is the potentially Defaulting Party, or an Early Termination has occurred or been designated with respect to Party A for which Party A has not satisfied its Obligations.

☐ Other:_____

B. Party B

A Material Adverse Change shall occur with respect to Party B in the following circumstances:

☐ (i) Its Credit Rating falls below ____ by S&P or ____ by Moody's; or (ii) it is given an "issuer rating" by S&P below _____ or by Moody's below ____; or (iii) it has no Credit Rating by either S&P or Moody's.

☐ Party B's creditworthiness, financial responsibility, or performance viability has become unsatisfactory to Party A in Party A's reasonably exercised discretion with regard to a transaction between the Parties conducted under the WSPP Agreement.

☒ An Event of Default shall have occurred and is continuing where Party B is the Defaulting Party, or a Potential Event of Default has occurred where Party B is the potentially Defaulting Party, or an Early Termination has occurred or been designated with respect to Party B for which Party B has not satisfied its Obligations.

☐ Other: _____

III. General Credit Assurances.

Explanatory note: If in Part II above either Party elected the second option (Material Adverse Change includes unsatisfactory creditworthiness, financial responsibility, or performance viability) (such election, a "Section 27 Inclusion"), the Parties must make the first election in this Part III. If in Part II the Parties did not elect a Section 27 Inclusion and if they do not make either election in this Part III, then the second election under this Part III shall apply by default.

☐ Section 27 of the WSPP Agreement applies, provided, that (a) the following phrase is added after the last word of Section 22.1(d): "or in the Collateral Annex to the WSPP Agreement between the Parties," (b) the following phrase is deleted: "The Second Party's obligations under this Section 27 shall be limited to a reasonable estimate of the damages to the First Party (consistent with Section 21.3 of this Agreement) if the Second Party were to fail to perform its obligations," and (c) the phrase "within three (3) Business Days of demand therefore" is revised to state "within one (1) Business Day after receipt of demand therefor."

☒ Section 27 of the WSPP Agreement does not apply; Sections 27 and Section 22.1(d) of the WSPP Agreement are inapplicable to WSPP Agreement transactions between the Parties.

IV. Minimum Transfer Amount.

A. Party A Minimum Transfer Amount: $100,000

B. Party B Minimum Transfer Amount: $100,000

V. Rounding Amount.

A. Party A Rounding Amount: $100,000

B. Party B Rounding Amount: $100,000

VI. Administration of Cash Collateral.

A. Party A Eligibility to Hold Performance Assurance in form of Cash; Interest Rate.

Note: if neither of the two options immediately below is selected, then Option A shall apply.

☐ **Option A:** Party A shall not be entitled to hold Performance Assurance in the form of Cash. Performance Assurance in the form of Cash shall be held solely by a Custodial Bank in accordance with Section 6(b) of the Collateral Annex.

☒ **Option B:** Party A shall be entitled to hold Performance Assurance in the form of Cash under Section 6(a)(i), (ii) and (iii) of the Collateral Annex, provided, that no Downgrade Event has occurred with respect to Party A. **If Option B is elected, the Parties must complete the following election:**

Right of Party B to Rescind Option B:

☐ Party B shall be entitled to rescind Option B unilaterally, in its sole discretion, such that upon rescission (in accordance with Section 6(a)(iv) of the Collateral Annex) Party A shall not be entitled to hold Performance Assurance in the form of Cash and Section 6(a)(iv) of the Collateral Annex shall become applicable.

☒ Party B shall not be entitled to rescind Option B unilaterally, in its sole discretion, provided, Party B shall lose its entitlement to hold Performance Assurance in the form of Cash upon the occurrence of any other Downgrade Event under Section 6(a)(iv) of the Collateral Annex.

To the extent Party A is entitled to hold Cash, the Interest Rate payable to Party B on Cash shall be as elected below:

Party A Interest Rate.

☒ Federal Funds Effective Rate - the rate for that day opposite the caption "Federal Funds (Effective)" as set forth in the weekly statistical release designated as H.15(519), or any successor publication, published by the Board of Governors of the Federal Reserve System. *(If neither Interest Rate box is checked, or the "Other" box is not completed, the Federal Funds Rate specified herein shall apply.)*

☐ Other - _____

B. Party B Eligibility to Hold Performance Assurance in form of Cash; Interest Rate.

Note: if neither of the two options immediately below is selected, then Option A shall apply.

☐ **Option A:** Party B shall not be entitled to hold Performance Assurance in the form of Cash. Performance Assurance in the form of Cash shall be held solely by a Custodial Bank in accordance with Section 6(b) of the Collateral Annex.

☒ **Option B:** Party B shall be entitled to hold Performance Assurance in the form of Cash under Section 6(a)(i), (ii) and (iii) of the Collateral Annex, provided, that no Downgrade Event has occurred with respect to Party B. **If Option B is elected, the Parties must complete the following election:**

Right of Party A to Rescind Option B:

☐ Party A shall be entitled to rescind Option B unilaterally, in its sole discretion, such that upon rescission (in accordance with Section 6(a)(iv) of the Collateral Annex) Party B shall not be entitled to hold Performance Assurance in the form of Cash and Section 6(a)(iv) of the Collateral Annex shall become applicable.

☒ Party A shall not be entitled to rescind Option B unilaterally, in its sole discretion, provided, Party A shall lose its entitlement to hold

Performance Assurance in the form of Cash upon the occurrence of any other Downgrade Event under Section 6(a)(iv) of the Collateral Annex.

To the extent Party A is entitled to hold Cash, the Interest Rate payable to Party B on Cash shall be as elected below:

Party B Interest Rate.

☒ Federal Funds Effective Rate - the rate for that day opposite the caption "Federal Funds (Effective)" as set forth in the weekly statistical release designated as H.15(519), or any successor publication, published by the Board of Governors of the Federal Reserve System. *(If neither Interest Rate box is checked, or the "Other" box is not completed, the Federal Funds Rate specified herein shall apply.)*

☐ Other - _____

C. Posting Deadline for Collateral Requirement

The Posting Party shall be required to provide Performance Assurance to cover an outstanding Collateral Requirement under Section 4 of the Collateral Annex no later than 2:00 pm New York time of the Local Business Day after receipt of a Demand Notice (the "Posting Deadline"), provided, that if the Posting Deadline is the same day as the Demand Notice is sent/received, then the Demand Notice must be received no later than 8 a.m. New York time on that day, and if the Demand Notice is sent/received after such time, then the Posting Deadline shall be 24 hours later.

D. Reduction Deadline for Transfer of Excess Performance Assurance

The Beneficiary Party shall be required to transfer Excess Performance Assurance to the Posting Party under Section 5 of the Collateral Annex no later than 2:00 pm New York time of the Local Business Day after receipt of a demand therefor (the "Reduction Deadline"), provided, that if the Reduction Deadline is the same day as the demand for return of Excess Performance Assurance is sent/received, then the demand must be received no later than 8 a.m. New York time on that day, and if the demand is sent/received after such time, then the Reduction Deadline shall be 24 hours later.

VII. Letters of Credit

A. Definition of LC Issuer:

If the Parties agree that a specific entity shall be an LC Issuer even if may not satisfy the credit rating specified in the definition of LC Issuer set forth in the Collateral Annex, identify such entity here:

_____

If the Parties agree to a different definition of LC Issuer than the definition specified in the Collateral Annex, state such definition here:

_____

_____

_____

B. Definition of Letter of Credit

☒ "Letter of Credit" means an irrevocable, non-transferable, standby letter of credit, issued by a Qualified Institution, or other issuer to which the Parties may agree in writing, in a form consistent with the Parties' agreements stated below and otherwise reasonably acceptable to the Beneficiary Party. Each Letter of Credit shall contain the following terms and conditions:

☐ "Letter of Credit" has the following meaning:

_____

_____

Regardless of the Parties' election in this Part VII.B above, the Parties may specify here additional terms and conditions that a Letter of Credit shall contain:

_____

_____

_____

VIII. Notice and other Communications Under Section 10(h) of Collateral Annex

Each demand, notice, consent, agreement, approval or other communication required or permitted to be given from one Party to the other Party under the Collateral Annex shall be submitted to the recipient Party at the following address or fax number:

Party A:

Attention:	Power Supply and Portfolio Administrator
Street:	116 S. Grant Street
City, State, Zip Code:	Roseville, CA 95678
Fax No.:	(916) 774-5583

Party B:

Attention:	Credit
Street:	Suite #1730 - 222 3 Ave SW
City, State, Zip Code:	Calgary, AB, Canada, T2P 0B4
Email:	gabrielle.schroeder@cascadetrading.com & mid.office@cascadetrading.com

Execution of Cover Sheet Elections:

Party A	**Party B**
City of Roseville Name of Party:	Triolith Energy Fund, LP Name of Party
_____ [Sign here]	_____ [Sign here]
_____ [Print name]	Scott Adair [Print name]
_____ Title	Chief Executive Officer Title
Date: _____	Date: 01/09/2026

City Council Communication

Meeting Date: 3/4/2026
Item #: VII.11
File #: 0900-03
Item ID: 2026-124

Title:	Substation Transformer Civil Construction - Approval of Plans and Specifications and Authorization to Call for Bids
Contact:	David Angel Jimenez 916-774-5698 dangel-jimenez@roseville.ca.us

SUMMARY

Staff recommends approval of plans and specifications of the Substation Transformer Civil Construction project and authorization for staff to call for bids. Construction work will occur at two locations: a new concrete foundation at Fiddyment Substation is required to site a spare 46MVA substation transformer, and construction work at Sierra Vista Substation is required to meet oil containment requirements. The cost of the project is estimated at $300,000. Funds are available in the Electric Department's FY2025-26 budget in the Electric Fund.

RECOMMENDATION

Staff recommends that the City Council approve the plans and specifications for the Substation Transformer Civil Construction project and authorize staff to call for bids.

BACKGROUND

Roseville Electric is proposing to expand the substation transformer containment pit at Sierra Vista Substation, and to construct a new substation transformer concrete foundation at Fiddyment Substation. The expansion of the containment pit at Sierra Vista Substation is necessary to meet substation transformer oil spill containment requirements. The oil containment currently in place was designed for a different transformer design; the transformer purchased for this installation has approximately 2,000 gallons more oil than what the containment was designed to accommodate. The new concrete foundation at Fiddyment Substation will be used to site a new spare substation transformer, to be used in the event of a failure elsewhere in the system and to allow Roseville Electric to be more responsive if a new substation is required to support new development.

FISCAL IMPACT

The estimated cost of this project is $300,000 and funds are available in the Electric Department's FY2025-26 budget in the Electric Fund.

ENVIRONMENTAL REVIEW

The proposed project involves the minor alteration of an existing facility. This activity is categorically exempt from CEQA as a Class 1 Exemption (State CEQA Guidelines Section 15301). The Exemption has been prepared and no further CEQA action is required.

CITY COUNCIL STRATEGIC PLAN/OVERARCHING GOALS

4. Invest in well-planned infrastructure and growth
6. Deliver exceptional City services

Respectfully Submitted,
David Angel Jimenez, Power Engineer

Daniel Beans, Electric Utility Director

ATTACHMENTS:
1. Sierra Vista Substation Vicinity Map
2. Fiddyment Substation Vicinity Map
3. Project Manual
4. Plan Set
5. CEQA Exemption

REVIEWERS:

David Angel Jimenez, Electric Department - Engineering	Created/Initiated - 2/11/2026
Chris Porter, Electric Department - Engineering	Approved - 2/11/2026
Shawn Matchim, Electric Department - All	Approved - 2/11/2026
Daniel Beans, Electric Department - All	Approved - 2/11/2026
Kelly Aye, City Attorney Department	Approved - 2/17/2026
Katrina Six, City Clerk Department	Approved - 2/18/2026
Ryan DeVore, City Manager Department - Assistant City Manager	Approved - 2/19/2026
Dennis Kauffman, City Manager Department - Assistant City Manager	Approved - 2/19/2026
Michelle Sheidenberger, City Attorney Department	Approved - 2/19/2026
Dominick Casey, City Clerk Department	Approved - 2/23/2026
Katrina Six, City Clerk Department	Final Approval - 2/23/2026

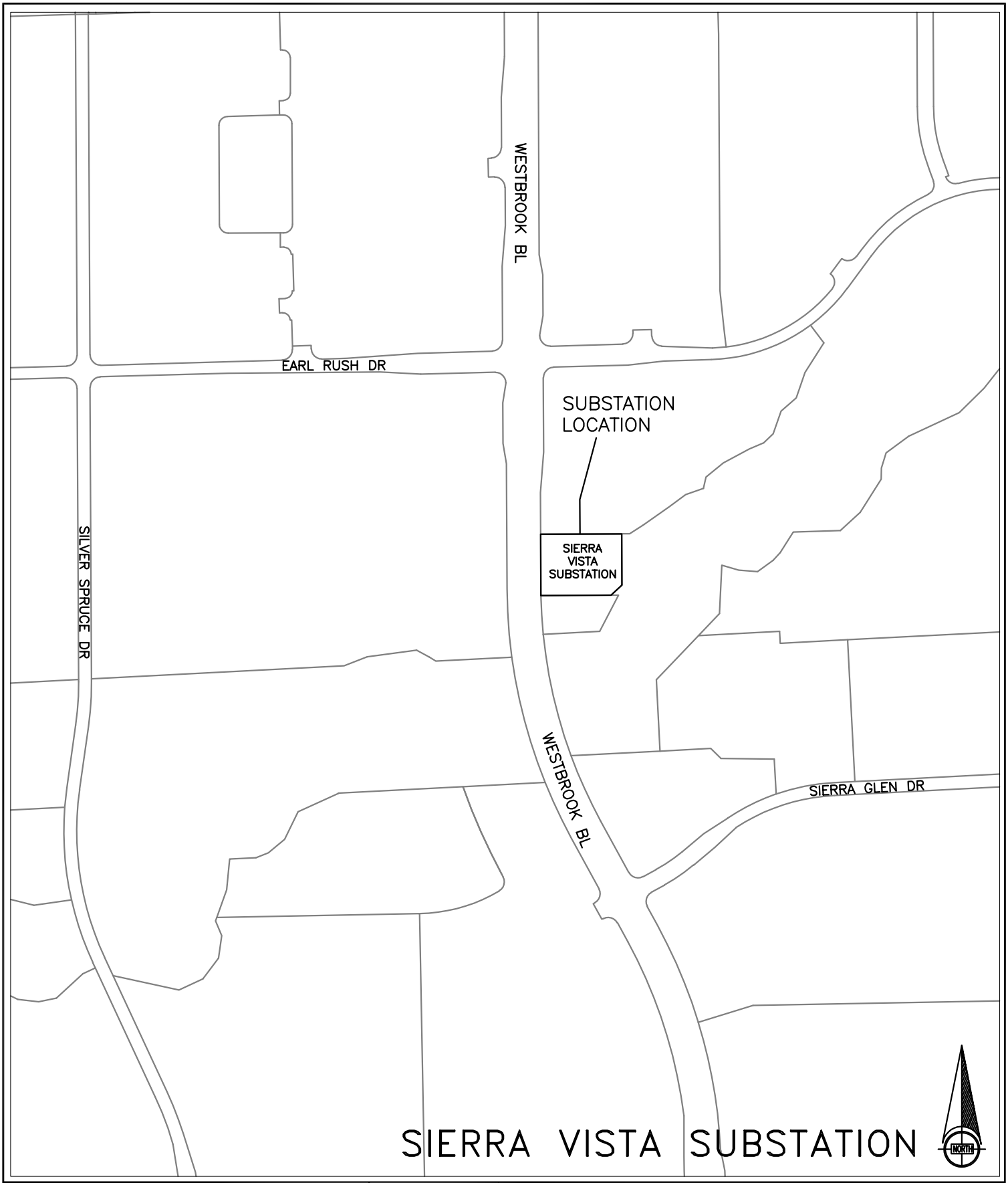

SIERRA VISTA SUBSTATION

CITY OF ROSEVILLE CALIFORNIA

Roseville Electric

ENG.: M. LARKIN	APPR.:	SCALE: NTS	JOB NO. 174105
DR.: C. SHIRLEY		DATE: 9/5/19	
SUBSTATION LOCATION PLAN			ACCOUNT NO. 41001–6130
			DRAWING NO. 395C1–00

CITY OF ROSEVILLE, 230-60KV FIDDYMENT SUBSTATION PROJECT
PHASE 2 EXPANSION

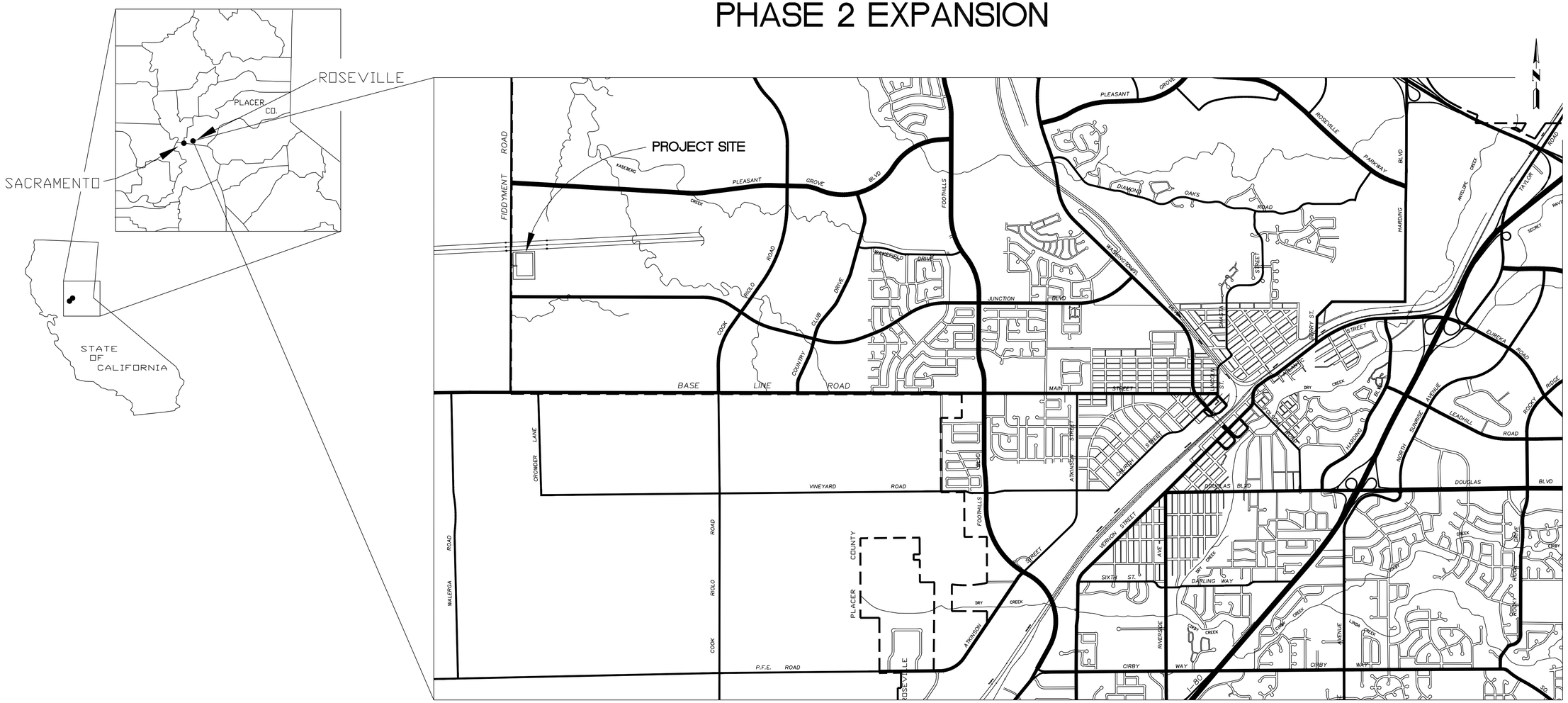

FIDDYMENT SUBSTATION

REV	BY	DATE	DESCRIPTION	TECH	APPR.
1	KB	1/16/04	PHASE 2 EXPANSION	MF	

ELECTRIC DEPARTMENT
(916) 774-5601

TITLE: VICINITY & SITE LOCATION PLAN & DRAWING LIST

ENG. M. FOK	APPR.	SCALE 1"=1500'
DR. J. HANSON		DATE 2/5/98

JOB NO. 944013
ACCOUNT NO. 40001
DRAWING NO. 325C1-01



Buildings & Grounds Project Manual

Name of project:

Spare Substation Transformer Civil Construction

Department:

Electric

CITY OF ROSEVILLE CALIFORNIA

TABLE OF CONTENTS

	Pagination Notation
Notice to Contractors	NTC
Instructions to Bidders	INT
Proposal	PROP
Insurance Broker Information Packet	INS
General Conditions for Buildings and Grounds	GC
Supplemental Conditions	SC
Specifications	SPEC
Drawings	DRAW
Assembly Bill No. 626	AB 626

CITY OF ROSEVILLE

DEPARTMENT OF ELECTRIC

Name of Project: Spare Substation Transformer Civil Construction

NOTICE TO CONTRACTORS

NOTICE IS HEREBY GIVEN THAT sealed Proposals will be received at the Office of the City Clerk, 311 Vernon Street, Roseville, California, until [to be determined] at 3:00 p.m. Late Proposals will be rejected. No exceptions.

The Proposals will be publicly opened and read by the City Clerk or designee of the City of Roseville at 3:05 p.m. on [to be determined] , 2026 at the Office of the City Clerk located at 311 Vernon Street, Roseville California for the following project:
Substation Transformers Civil Construction.

A pre-bid meeting will be held per the instructions listed on Public Purchase at: https://www.publicpurchase.com.

A Project Manual, including all Contract Documents and the Proposal forms for bidding this project, may be obtained on-line from the City of Roseville's website at https://www.roseville.ca.us/business/procurement_services/bids_rfps. All communications relative to this project shall be conducted through Public Purchase.

Bids shall be submitted on the City's Proposal Forms included in the Project Manual, plainly endorsed with the Bidder's name together with signed acknowledgement of any and all addenda. Proposal Forms shall be securely sealed in a suitable envelope marked with the name and address of the Bidder, and marked in capital letters on the front and back of the envelope as

follows:

I. [SPARE SUBSTATION TRANSFORMER CIVIL CONSTRUCTION]

(Name of Bidder)

(Address of Bidder)

Whether mailed or personally delivered, all bids shall be addressed to the City of Roseville, Office of the City Clerk, 311 Vernon Street, Roseville, California, 95678.

Each bid must be accompanied by a Bid Guaranty in the form of a Certificate of Deposit, Certified or Cashier's Check, Bidder's Bond or Irrevocable Standby Letter of Credit in an amount equal to at least ten percent (10%) of the Bidder's Grand Total Price. The Bid Guaranty will be retained by the City and applied to any and all damages sustained by the City in the event that the successful Bidder fails or refuses to enter into the Contract awarded to it and to furnish all required bonds and Certificates of Insurance. The City intends to award the Contract to the lowest responsible Bidder based on the Grand Total Bid Price for all components of the Project. To the extent allowed by law, the City reserves the right to reject any and all bids and/or to waive any irregularities or informalities in any bid or in the bidding procedure. The City specifically reserves the right to not award the Contract after the opening of bids.

Any bid may be withdrawn at any time prior to the time fixed in the public notice for the deadline submission of bids only by written request for the withdrawal of the bid filed with the City Clerk. The request shall be executed by the Bidder or his or her duly authorized representative. The withdrawal of a bid does not prejudice the right of the Bidder to file a new bid by the submission deadline. Whether or not bids are opened exactly at the time fixed in the public notice for opening bids, a bid will not be received after the deadline submission of bids

nor may any bid be withdrawn after the time fixed in the public notice for deadline for submission of bids. Immediately following the deadline for submission of bids all bids shall become the property of the City of Roseville and the City is under no obligation to return bids.

Bids will be examined and reported to the City Council within sixty (60) business days after the bid opening. Except as permitted by applicable law, no Bidder may withdraw its bid for a period of sixty (60) business days after the date of bid opening. Each Bidder will be notified of any award of the Contract by the City.

The City will affirmatively ensure non-discrimination on the basis of one or more of the following: race, religious creed, color, national origin, ancestry, physical disability, mental disability, medical condition, genetic information, marital status, sex, age, sexual orientation, or military and veteran status in the award and administration of contracts that it awards.

Pursuant to Public Contract Code Section 22300, the successful Bidder may submit certain securities in lieu of the City withholding retention of payments during the Project.

The City has determined that the Contractor shall possess a valid Class A, General Contractor's license at the time that the bid is submitted, as well as any other license classification as may be required by the laws of the California for the performance of the work specified in the Contract Documents. Said license shall be maintained during the Contract period. Failure to possess the specified license shall render the bid nonresponsive and will act as a bar to the award of the Contract to any Bidder not possessing such a license at the time of bid submittal. The Contractor shall provide certification of the license, its number and the expiration date on the proposal form.

The work is to be done in Placer County. Pursuant to California Labor Code Section 1773, the City has ascertained the General Prevailing Rate of Wages in the County in which the

work is to be done to be as determined by the Director of Industrial Relations of the State of California. The Contractor is hereby made aware that information regarding prevailing wage rates may be obtained from the State Department of Industrial Relations and/or the following website address: http://www.dir.ca.gov/dlsr/DPreWageDetermination.htm. The Contractor is required to post a copy of the applicable wage rates at the job site. Attention is directed to Section 5 "Legal Relations and Responsibility" of the General Conditions.

Pursuant to Labor Code Section 1771.1(b), notice is hereby given that a contractor or subcontractor shall not be qualified to bid on, be listed in a bid proposal, subject to the requirements of Section 4104 of the Public Contract Code, or engage in the performance of any contract for public work, as defined in Labor Code Sections 1720, et seq., unless currently registered and qualified to perform public work pursuant to Labor Code Section 1725.5 or exempt from registration requirements pursuant to Labor Code Section 1725.5(f). It is not a violation of Labor Code Section 1771.1 for an unregistered contractor to submit a bid that is authorized by Section 7029.1 of the Business and Professions Code or by Section 10164 or 20103.5 of the Public Contract Code, provided the contractor is registered to perform work pursuant to Labor Code Section 1725.5 at the time the contract is awarded or is exempt from registration requirements pursuant to Labor Code Section 1725.5(f). The Contractor is hereby notified that this project is subject to compliance monitoring and enforcement by the Department of Industrial Relations.

Vehicles with a GVWR greater than 8,500 lbs. and light – duty package delivery vehicles operated in California may be subject to the California Air Resources Board Advanced Clean Fleets regulations. Such vehicles may therefore be subject to requirements to reduce emissions and air pollutants. For more information, please visit the CARB Advanced Clean Fleets

webpage at https://ww2.arb.ca.gov/our-work/programs/advanced-clean-fleets. In addition, certain off-road diesel vehicles may be subject to the CARB In-Use Off-Road Diesel-Fueled Fleets Regulation. For more information, please visit the CARB In-Use Off-Road Diesel-Fueled Fleets Regulation webpage at https://ww2.arb.ca.gov/our-work/programs/use-road-diesel-fueled-fleets-regulation.

All questions prior to the deadline for bid submissions shall be directed to Public Purchase at https://www.publicpurchase.com .

The deadline for submissions of questions and clarifications regarding the Contract Documents is 7 calendar days before the deadline for bid submissions. Only Addenda issued by the City are binding.

_____
City Clerk, City of Roseville

Dated: _____

Published: _____

II. SECTION 1. GENERAL

1-1.01 **GENERAL.** These Instructions to Bidders form a part of the Contract Documents. Capitalized terms are defined in the General Conditions Section 1.

1-1.02 **EXAMINATION OF PLANS, CONTRACT DOCUMENTS AND SITE OF THE WORK.** The Bidder shall examine carefully the site of the Work and all the Contract Documents, including these Instructions to Bidders, and shall inform itself of the conditions relating to the execution of the Work. Failure to do so will not relieve the successful Bidder of its obligation to enter into an Agreement and complete the Work in strict accordance with the Contract Documents. Conditions relating to the execution of the Work include the requirements of federal, state, and local laws, statutes and ordinances relative to the execution of Work, including, but not limited to, applicable regulations concerning prevailing wage rates, non-discrimination in the employment of labor, protection of the public, employee health and safety, and environmental protection.

The submission of a bid shall be conclusive evidence that the Bidder has investigated and is satisfied as to the conditions to be encountered, as to the character, quality, and scope of Work to be performed, the quantities of materials to be furnished, and as to the requirements of all the Contract Documents.

1-1.03 **EXISTING INFORMATION.** Where the Department has made investigations of site conditions, including subsurface conditions in areas where Work is to be performed under the Contract, such investigations are made only for the purpose of study and design. City does not represent that such conditions as found in these investigations or inferences or conclusions drawn as a result of these investigations will represent actual site

conditions and hereby disclaims any liability as a result of Contractor's or Bidder's reliance on such investigations. City will presume that all Bidders have conducted their own site investigations, including investigations of subsurface conditions. Where such investigations have been made, Bidders or Contractors may, upon written request, inspect the records of the Department as to such investigations subject to the conditions set forth in these Instructions to Bidders. Such inspection of records may be made only at the location noted above. The records of such investigations are not a part of the Contract Documents and are shown solely for the convenience of the Bidder or Contractor. The City assumes no responsibility whatsoever with respect to the sufficiency or accuracy of the investigations made, the records thereof, or of the interpretations set forth therein or made by the City in its use thereof. The City makes no warranty or guarantee, either express or implied, that the conditions indicated by such investigations or records are representative of those existing throughout such areas, or any part thereof, or that unforeseen developments may not occur, or that materials other than, or in proportions different from those indicated, may not be encountered.

No information derived from such inspection of records of investigations or compilation thereof made by the City, the Department or from the Engineer, or his or her assistants, will in any way relieve the Bidder or Contractor from properly examining the site and making such additional investigations as it may elect, or from properly fulfilling the terms of the Contract.

III. SECTION 2: BID REQUIREMENTS

2-1.01 **PROPOSAL FORMS.** The Department will furnish to each Bidder standard Proposal Forms, which, when filled out and executed may be submitted as the bid. Proposals shall include all pages in the Project Manual with page numbers marked "PROP" plus the Addendum acknowledgment form (front sheet) from all Addenda received by the Bidder. Proposals shall be removed from the Project Manual. The full Project Manual shall not be submitted with the proposal. Bids not presented on forms so furnished will be disregarded.

The Proposal and one (1) copy thereof shall be submitted as directed in the "Notice to Contractors" under sealed cover plainly marked as a Proposal, and identifying the project to which the Proposal relates and the date of the bid opening therefor. Proposals which are not properly marked may be disregarded.

All blank spaces in the Proposal must be completed, as required, in ink. All price information shall be shown, clearly legible, in figures where required.

The Bidder shall sign the Proposal in the blank space provided therefor. If the Bidder is the sole owner, the Proposal shall be signed by the owner. If the Bidder is a corporation, the legal name of the corporation and its State of incorporation shall be set forth and the Proposal shall be signed by at least two officers authorized to sign contracts on behalf of the corporation. If the Bidder is a partnership, the true name of the firm shall be set forth, the names and addresses of all partners shall be given and the Proposal shall be signed by a partner in the firm authorized to sign contracts on behalf of the partnership. If the Bidder is a joint venture, the Proposal shall be signed on behalf of each participating company by officers or other individuals who have the full and proper authorization to do so. If the Proposal is signed by an agent of the Bidder other than an officer of a corporation or a member of a partnership, a notarized Power of

Attorney must be on file with the City prior to opening of bids or must be submitted with the Proposal. If requested by the City, the Bidder shall promptly submit evidence satisfactory to the City of the authority of the person signing the Proposal.

2-1.02 **SUBMISSION OF BIDS.** Bids must be submitted at the prescribed time and location specified in the Notice to Contractors. Any submission received after the prescribed time shall be rejected, regardless of whether or not bids are opened exactly at the prescribed time.

Any unauthorized conditions or qualifications entered on, or changes made to, the Proposal may render it invalid and may cause its rejection.

No telegraphic, telephonic, or facsimile or other electronically transmitted bids will be considered.

IV. 2-1.03 **REQUIRED LISTING OF PROPOSED SUBCONTRACTORS.** Each Proposal shall list the name, address and Contractor license number of each Subcontractor to whom the Bidder proposes to subcontract portions of the Work in an amount in excess of one-half of one percent (0.5%) of its total bid, in accordance with Section 4100 to 4114, inclusive, of the Public Contract Code for the State of California. The Bidder shall list the Subcontractor's license number and the portion of the Work that will be done by each Subcontractor. If the Bidder fails to specify a Subcontractor for any portion of the Work, the Bidder agrees to perform that portion of the Work itself, and represents that it is qualified to perform that portion of the Work itself. The Bidder's attention is invited to other provisions of the Public Contract Code related to the imposition of penalties for a failure to observe its provisions by using unauthorized Subcontractors or by making unauthorized substitutions.

2-1.04 **CONTRACTOR'S LICENSING LAWS.** Attention is directed to the

provisions of Business and Professions Code Chapter 9 of Division 3 concerning the licensing of Contractors.

All Bidders at the time of bid submittal shall be licensed as Contractors in accordance with the laws of this State. Any Bidder or Contractor not so licensed is subject to the penalties imposed by such laws. The form of Contractor's license required is stated in the Notice to Contractors, provided that the City makes no representation as to whether the State may require other or additional licenses. It is the Bidder's and Contractor's responsibility to obtain the correct Contractor's licenses. Bidders shall be skilled and regularly engaged in the general class or type of Work called for under this Contract.

All Bidders and Contractors, including Subcontractors, shall have a current City business license before undertaking any Work.

2-1.05 **NONCOLLUSION DECLARATION.** By submitting a bid, the Bidder represents and warrants that such bid is genuine and not a sham or collusive or made in the interest or on the behalf of any person therein named, and that the Bidder has not, directly or indirectly, included or solicited any other Bidder to put in a sham bid, or any other person, firm, or corporation to refrain from bidding, and that the Bidder has not in any manner sought collusion to secure the Bidder an advantage over any other Bidder.

Bidders shall submit a properly completed and executed "Noncollusion Declaration" in the form required by Public Contract Code Section 7106 and provided with the Proposal (PROP-11).

2-1.06 **DISQUALIFICATION, REMOVAL OR OTHER PREVENTION OF BIDDING.** A bid may be rejected on the basis of a Bidder, any officer of such Bidder, or any employee of such Bidder who has a proprietary interest in such Bidder, having been disqualified,

removed, or otherwise prevented from bidding on, or completing a federal, state, or local project because of a violation of law or a safety regulation.

2-1.07 **PROPOSAL GUARANTY.** All bids shall be accompanied by one of the following forms of Bidder's security: Cash, a cashier's check, a certified check, or a Bidder's bond executed by an admitted California surety insurer, made payable to the City of Roseville, or any other form of security deemed acceptable by the City Attorney. The security shall be in an amount equal to at least ten percent (10%) of the amount bid. A bid will not be considered unless one of the form of Bidder's security is enclosed with it.

A Bidder's bond shall conform to the City's bond form in the Proposal and shall be properly filled out and executed.

2-1.08 **SCHEDULE OF BID PRICES.** Bidders are directed to submit unit and lump sum prices for all Work set forth in the Contract Documents on the Proposal Form entitled "Schedule of Bid Prices."

Unit prices and lump sum prices, as indicated, must be entered in the appropriate spaces provided in the Schedule of Bid Prices. If applicable, unit prices shall be multiplied by the quantities shown, and the total shall be inserted in the Amount column. In the event of any error or discrepancy between the unit price and the calculated amount, the unit prices shall govern. The City may correct any mathematical errors apparent on the face of the bid.

The amounts shown in the Amount column must be added together in arriving at the Grand Total Bid Price.

Amounts for Allowance bid items must be entered in the exact amount in the Amount column.

The prices included within the Schedule of Bid Prices shall include all costs for labor,

materials, tools, equipment, services, Subcontractors, suppliers, taxes, insurance, shipment, delivery, overhead, profit, and all other costs necessary to perform the Work in accordance with the Contract Documents.

The Grand Total Bid Price shall be indicated in the Summary table form included with the Schedule of Bid Prices. The Grand Total Bid Price shall be the sum of the amounts bid for each of the designated portions of the Work, as more specifically described on the Schedule of Bid Prices form itself.

Full compensation for complying with the Contract Documents, including requirements of the Standard Specifications, the General Conditions, Supplemental Conditions, and all warranties, shall be considered included in the bid items and no additional compensation shall be allowed therefor.

Full compensation for completion of all work as shown on the plans, as specified in the Specifications, and as directed by the City, shall be considered included in the bid items and no additional compensation shall be allowed.

Bidders are strongly discouraged from submitting unbalanced bids. As used herein, the term “unbalanced bid” is defined as any bid that does not include a reasonable proportionate allocation of indirect costs and profit of each bid item indicated in the Schedule of Bid Prices. The City reserves the right to reject any unbalanced bid if the City determines that there is a reasonable doubt that an acceptance of the bid will not result in the lowest ultimate cost to the City with regard to the work or a disproportionate distribution of contract funds.

The City reserves the right to delete any bid item in its entirety and/or significantly reduce the quantity of Work under a bid item. The City makes no representation that any Work under a bid item will be performed during the course of the Project or that the Work will be

performed at the quantities included in the Schedule of Bid Prices. As provided in the General Conditions, for any deleted Work, Contractor shall not be entitled to payment of the indirect costs and profit included for said bid item. All bid items shall be considered distinct and severable from the remaining bid items, and each Bidder acts at its peril if its bid is unbalanced.

The City shall compare bids on the basis of the Grand Total Bid Price, which includes the base bid and any alternates designated on the Schedule of Bid Prices. Alternates may or may not be awarded, or may be awarded in any combination, at the City's discretion.

2-1.09 **WITHDRAWAL OF PROPOSALS.** Any bid may be withdrawn at any time prior to the time fixed in the Notice to Contractors for the opening of bids, provided that a request in writing, executed by the Bidder or its duly authorized representative, for the withdrawal of such bid is filed with the City Clerk. Facsimile and electronic mail requests are not acceptable. The withdrawal of a bid shall not prejudice the right of a Bidder to file a new bid. The withdrawal of any bid after the time fixed in the Notice to Contractors for the opening of bids will not be permitted.

2-1.10 **ADDENDUM.** Proposals shall include all costs and account for all Addenda issued prior to opening of bids. The Bidder is responsible for verifying that all issued Addenda have been received. An Addendum acknowledgment form for each Addendum shall be included as part of the Proposal submittal.

2-1.11 **PUBLIC OPENING OF PROPOSALS.** Proposals will be publicly opened and read at the time and place indicated in the Notice to Contractors. Bidders or their authorized agents are invited to be present.

2-1.12 **TRENCHING AND EXCAVATION WORK.** In accordance with the provisions of California Labor Code Section 6707, if the Work involves construction of a

pipeline, sewer, sewage disposal system, boring or jacking pits, or similar trenches or open excavations, which are five feet (5') or deeper, each bid submitted shall contain, as a bid item, adequate sheeting, shoring, and bracing, or equivalent method, for the protection of life or limb, which shall conform to all applicable safety orders.

V. SECTION 3: EVALUATION OF BIDS

3-1.01 **BID EVALUATION PROCESS.** Bids will be evaluated to determine the apparent low Bidder. The apparent low Bidder will be determined on the basis of the Grand Total Bid Price, as shown in the Schedule of Bid Prices. If additive or deductive alternates are used in the Schedule of Bid Prices, the apparent low Bidder will be the Bidder with the lowest total of the bid prices for base contract items plus the alternates designated by the City as those that will be used for determining the lowest bid price. However, the City reserves the right to (1) not award any alternates or (2) award any combination of alternates.

In case of discrepancy between the total of the base contract items and any specified alternates and the stated Grand Total Bid Price, the total of the base contract items plus specified alternates shall prevail. Any mathematical errors that appear on the face of the bid will be corrected by the City and the City will use the mathematically corrected addition. For example, if the mathematical total of Bidder's base contract items plus specified alternates equals $1,000,000, but the Bidder has written $1,250,000 as the Grand Total Bid Price, the City will consider $1,000,000 to be the Bidder's Grand Total Bid Price for purposes of comparison to other Bidders and actual bid award. The City reserves its rights to reject or accept bids based on discrepancies between the stated Grand Total Bid Price and the actual mathematical total of the base contract bid items, plus specified alternates.

3-1.02 **REJECTION OF IRREGULAR PROPOSALS.** Proposals may be rejected in the City's sole discretion if they show any alterations of form, additions not called for, conditional bids, incomplete bids, erasures, or irregularities of any kind. However, the City reserves the right to waive any minor irregularities and informalities in any bid or in the bid procedure for any reason.

3-1.03 **COMPETITIVE BIDDING.** If more than one proposal is offered by any individual, firm, partnership, corporation, association, or any combination thereof, under the same or different names, all such proposals may be rejected. A party who has quoted prices on materials or Work to a Bidder is not thereby disqualified from quoting prices to other Bidders, or from submitting a bid directly for the materials or Work.

All Bidders are put on notice that any collusive agreement to control or affect the awarding of this Contract is in violation of the competitive bidding requirements of the City Charter, State Contract Act and the Business and Professions Code and may render void any Contract let under such circumstances.

3-1.04 **RELIEF OF BIDDERS.** If the Bidder claims a mistake was made in its bid, the Bidder shall give the Department written notice within five (5) Days after the opening of the bids of the alleged mistake, specifying in the notice in detail how the mistake occurred. No relief from a claimed mistaken bid shall be granted unless such mistake clearly appears on the face of the bid submitted to the City. Claimed mistakes on backup worksheets, spreadsheets, computerized bidding programs, or any other similar calculative bidding mistake which is not apparent on the face of the bid shall not under any circumstance be considered as a basis for relief. The burden of proving the occurrence of a mistake entitling a Bidder to relief from its bid rests entirely on the Bidder. Relief from bids shall be in the City's sole discretion.

VI. SECTION 4: AWARD AND EXECUTION OF CONTRACT

4-1.01 **AWARD OF CONTRACT.** The City reserves the right to reject any and all proposals and to award (or not award) any combination of bid items at its option. Any such award will be to the lowest responsible Bidder whose proposal complies with the requirements prescribed for the bid items awarded. Such award, if made, will be made within sixty (60) business days after the opening of the proposals. If the lowest responsible Bidder refuses or fails to execute the Contract, or provide an acceptable Performance Bond, Payment Bond, and insurance certificate(s), the City may award the Contract to the second lowest responsible Bidder. Such award, if made, will be made within eighty-two (82) business days after the opening of proposals. If the second lowest responsible Bidder refuses or fails to execute the Contract, or provide an acceptable Performance Bond, Payment Bond, and insurance certificate(s), the City may award the Contract to the third lowest responsible Bidder. Such award, if made, will be made within one hundred four (104) business days after the opening of the proposals. The above time periods within which the award of Contract may be made are subject to extension for such further period as may be agreed upon in writing between the City and the Bidder concerned.

4-1.02 **RETURN OF BIDDER'S SECURITIES.** Within ten (10) Days after the award of the Contract, the City Clerk will return all Bidders' securities, other than Bidders' bonds, accompanying the proposals that are not to be further considered in making the award. Retained Bidders' securities will be held until the Contract has been fully executed, after which all Bidders' securities, except Bidders' bonds and any Bidders' securities that have been forfeited, will be returned.

4-1.03 **CONTRACT BONDS.** The successful Bidder shall furnish two (2)

bonds in the form contained in the section entitled Insurance Broker Information Packet and Bonds. One (1) bond shall secure the payment of the claims of laborers, mechanics or materialmen employed on the Work under the Contract, and the other bond shall guarantee the faithful performance of the Contract.

Each of the two (2) bonds shall be in a sum equal to one hundred percent (100%) of the Contract Price. If the Contract Price increases by the issuance of Change Orders, the penal amounts of the bonds required shall increase accordingly. Sureties on each of said bonds shall be satisfactory to the City.

All alterations, extensions of time, extra and additional Work, and other changes authorized by the Standard Specifications, the General Conditions, the Supplemental Conditions or any part of the Contract may be made without securing the consent of the surety or sureties on the Contract bonds.

Furthermore, the successful Bidder shall furnish a certificate from the County Clerk as required by California Civil Code of Procedure Section 995.660(a)(3).

4-1.04 **INSURANCE.** At the time of the execution of the Contract, the Contractor shall, at its own expense, procure, and at all times during the prosecution of the Work maintain in full force and effect Worker's Compensation Insurance, and Liability Insurance as specified in the General Conditions. The Contractor shall provide a Certificate of Insurance in the form contained in the section entitled Insurance Broker Information Packet.

4-1.05 **EXECUTION OF CONTRACT.** The Contract shall be signed by the successful Bidder and returned, together with all the required Contract bonds and insurance certificates, within fifteen (15) Days after the Contract has been awarded, or as otherwise directed, in writing, by the City.

If the Bidder is an individual, the Contract shall be executed personally by the Bidder. If the Bidder is a partnership, it is desirable that the Contract be executed by all of the partners, but it may be executed by one of them. If the Bidder is a corporation, it must be executed by two officers of the corporation consisting of (1) the chairman of the board, president or vice president; and (2) the secretary, assistant secretary, chief financial officer, treasurer or assistant treasurer, or by a person authorized by the corporation to execute written contracts on its behalf, and the corporate seal affixed thereto. In the alternative, a person other than an officer may sign the Contract, provided evidence satisfactory to the City is provided indicating the individual's authority to bind the corporation. If the corporate seal is not affixed to the Contract, or if it is executed by a person other than officers, or only by one officer, there must be attached to the Contract a certified copy of a resolution of the corporation authorizing such officer or person to execute written contracts for and on behalf of the corporation. If the Bidder is a joint venture, the Contract must be executed on behalf of each participating firm by officers or other individuals who have the full and proper authorization to do so.

4-1.06 **FAILURE TO EXECUTE CONTRACT.** Failure of the lowest responsible Bidder, the second lowest responsible Bidder, or the third lowest responsible Bidder to execute the Contract and file acceptable bonds and insurance as provided within fifteen (15) Days after the Contract has been awarded, or as otherwise directed, in writing, by the City, shall be just cause for annulment of the award and forfeiture of the Bidder's security. The successful Bidder may file with the City Clerk a written notice, signed by the Bidder or Bidder's authorized representative, specifying that the Bidder will refuse to execute the Contract if presented to Bidder. The filing of such notice shall have the same force and effect as the failure of the Bidder to execute the Contract and furnish acceptable bonds within the time prescribed.

VII. SECTION 5: BID PROTEST PROCEDURES

5-1.01 **POLICY/PROCEDURES.** It is the policy of the City to consider fully and adjudicate promptly protests filed by prospective Bidders relating to the City's bidding procedure or award of the Contract. Protests shall be filed and processed in accordance with Section 4.12.150 of the Roseville Municipal Code. A Bidder's failure to follow the bid protest procedures may result in rejection of the protest by the City.

PROPOSAL TO THE DEPARTMENT OF _____

Project:_____

Name of Bidder_____Business Phone _____

Business Address _____

Place of Business _____

Contractor's License No. _____

License Expiration Date_____

License Classification Type _____

DIR Registration No. _____

Type of business organization: _____

*If a Corporation, incorporated under the laws of the State of: _____

City of Roseville Business License No._____

The undersigned Bidder herewith submits this Proposal and binds itself on award by the City of Roseville under this bid to execute a Contract in accordance with its bid and the Contract Documents.

The Notice to Contractors, Instructions to Bidders, Form of Agreement, Specifications, General Conditions, Supplemental Conditions, Contract Drawings, and Addenda, if any, are made part of this bid and all provisions thereof are hereby accepted, and all representations and warranties are required thereby are hereby affirmed.

The work to be done is described in the Bidding Documents entitled _____

_____, City of Roseville, California.

This offer shall be irrevocable for a period of sixty (60) Days after the date on which bids are opened.

The undersigned Bidder understands that any clarification made to the above or any new and different conditions or information submitted on or with its Proposal, other than that requested, may render the bid non-responsive.

The undersigned, as Bidder, declares that the only persons or parties interested in this Proposal as principals are those named herein; that this Proposal is made without collusion with any other person, firm, or corporation; that the Bidder has carefully examined the location of the proposed Work, the attached Form of Agreement, and the plans, Specifications, and other Contract Documents; and agrees if this Proposal is accepted, that it will contract with the City of Roseville, in the form of a copy of the Agreement contained in the Project Manual, to provide all necessary machinery, tools, apparatus and other means of construction, and to do all the work and furnish all the materials specified in the Contract Documents, in the manner and time therein prescribed, and according to the requirements of the Director, as therein set forth, and that the Bidder will take in full payment therefore prices indicated in the Schedule of Bid Items, including all work modified by addendum numbers_____. (IF NONE, STATE NONE).

Bids are required for all Bid Items. The amount of the Bid for comparison purposes will be the total of all items awarded.

The Bidder shall set forth for each item of work, in clearly legible figures, an item ("unit") price and a total for the item in the respective spaces provided for this purpose in the Schedule of Bid Items.

The prices included within the Schedule of Bid Items include all costs for labor, materials, tools, equipment, services, Subcontractors, suppliers, taxes, insurance, shipment, delivery, overhead, profit, and for all other costs necessary to perform the Work in accordance

with the Contract Documents.

Accompanying this Proposal is_____.

(Notice: Insert the words "Cash $_____," "Cashier's Check," "Certified Check," or "Bidder's Bond," as the case may be, in an amount equal to at least ten percent (10%) of the total of the Bid.)

The names of all persons interested in the foregoing Proposal as Principals, are as follows: _____

_____

_____

_____

If SOLE OWNER, execute here:

I sign as sole owner of the business named above:

_____

If PARTNERSHIP, one or more partners sign here:

The undersigned certify that we are partners in the business named above and that we sign this bid with the full authority to do so:

_____

_____

If CORPORATION, execute here:

Corporate Name: _____

Incorporated under the laws of the State of _____

The undersigned certify that they sign this bid with the full and proper authorization so to do:

By_____	By_____
*Signature of Authorized Official**	*Signature of Authorized Official**
_____	_____
Title	*Title*
_____	_____
Typewritten or Printed Name	*Typewritten or Printed Name*

If JOINT VENTURE, execute here:

Joint Venture name composed of: _____

The undersigned certify that they sign this bid with the full and proper authorization so to do:

_____	_____
*Signature of Authorized Official**	*Signature of Authorized Official**
_____	_____
Title	*Title*
_____	_____
Typewritten or Printed Name	*Typewritten or Printed Name*

*If Bidder is a partnership or Joint Venture, give the full names of all partners and/or Joint Ventures in the space provided (use additional sheet if required). If Bidder is a corporation, two signatures are required as follows: (1) the Chairman, President, or Vice-President and (2) the Secretary, Assistant Secretary, Chief Financial Officer, Treasurer, or Assistant Treasurer. In the alternative, this Agreement may be executed by a single officer or a person other than an officer provided that evidence satisfactory to City is provided demonstrating that such individual is authorized to bind the corporation (example, a copy of a certified resolution from the corporation's board or a copy of the corporation's bylaws).

[LIST OF SUBCONTRACTORS FOLLOWS ON NEXT PAGE.]

LIST OF SUBCONTRACTORS

Contractor's Name: _____

The Bidder is required to furnish the following information in accordance with the provisions of Section 4100 and 4114, inclusive, of the Public Contract Code of the State of California. This list and information shall include all Subcontractors that perform work, provide labor or render services to the Bidder in connection with the Project in an amount in excess of one-half of one percent (0.5%) of the total amount of the Bidder Grand Total Price.

PORTION/ TYPE OF WORK	% OF CONTRACT	SUB-CONTRACTOR'S NAME	CONTRACTOR LICENSE NO.	DIR REG NO.	BUSINESS ADDRESS (CITY, STATE)

SECURITY FOR COMPENSATION CERTIFICATE

(Required by California Labor Code Section 1861)

TO: City Council
City of Roseville

I am aware of the provisions of Section 3700 of the Labor Code which require every employer to be insured against liability for workers' compensation or to undertake self-insurance in accordance with the provisions of that code, and I will comply with such provisions before commencing the performance of the work of this Contract.

_____

_____
(Signature of Bidder)

_____

_____
Business Address

_____
Telephone

BIDDER'S BOND

City Council of the City of Roseville

KNOW ALL MEN BY THESE PRESENTS:

That we _____

_____, as PRINCIPAL, and

_____

a,_____and duly authorized to transact business under the laws of the State of California, as SURETY, are held and firmly bound unto the City of Roseville in the penal sum of_____dollars ($_____), being at least TEN PERCENT (10%) OF THE TOTAL AMOUNT OF THE BID of the Principal above named, submitted by said Principal to the City of Roseville, acting by and through the Public Works Director, for the work described below, for the payment of which sum in lawful money of the United States, well and truly to be made, to the Director of the Department to which said Bid was submitted, we bind ourselves, our heirs, executors, administrators and successors, jointly and severally, firmly by these presents.

THE CONDITION OF THIS OBLIGATION IS SUCH,

That whereas the Principal has submitted the above-mentioned Bid to the City Council of the City of Roseville, as aforesaid, for certain construction specifically described as follows, for which Bids are to be opened at the Office of the City Clerk located at 311 Vernon Street, Roseville, California, on_____, 20 FOR

_____

(Copy here the exact title of work as it appears on the Proposal.)

NOW, THEREFORE, IF THE AFORESAID PRINCIPAL is awarded the Contract and, within the time and manner required under the Contract Documents, after the prescribed forms are presented for signature, enters into a written Contract, in the prescribed form, in accordance with the Bid, and files all insurance and two (2) Bonds with the Department, one (1) to guarantee Faithful Performance and the other to guarantee Payment for Labor and Materials, as required by law, then this obligation shall be null and void; otherwise, it shall be and remain in full force and effect.

IN WITNESS WHEREOF, we have hereunto set our hands and seals on this_____day of_____, 20___.

_____(Seal)

_____(Seal)

_____(Seal)
Principal

_____(Seal)

_____(Seal)

_____(Seal)
Surety

_____

_____
Business Address

NOTE: To be considered complete, both the Principal and the Surety must sign this Bidder's Bond. In addition, signatures of those executing for the Surety must be properly acknowledged.

Project _____

Contractor _____

SCHEDULE OF BID ITEMS

BID ITEM	ITEM DESCRIPTION	UNIT	TOTAL AMOUNT ($)
1	Concrete foundation, conduits, and all associated work at Fiddyment Substation	Lump Sum	
2	Containment pit extension and all associated work at Sierra Vista Substation	Lump Sum	

NONCOLLUSION DECLARATION TO BE EXECUTED BY
BIDDER AND SUBMITTED WITH BID

The undersigned declares:

I am the_____of _____, the party making the foregoing bid.

The bid is not made in the interest of, or on behalf of, any undisclosed person, partnership, company, association, organization, or corporation. The bid is genuine and not collusive or sham. The Bidder has not directly or indirectly induced or solicited any other Bidder to put in a false or sham bid. The Bidder has not directly or indirectly colluded, conspired, connived, or agreed with any Bidder or anyone else to put in a sham bid, or to refrain from bidding. The Bidder has not in any manner, directly or indirectly, sought by agreement, communication, or conference with anyone to fix the bid price of the Bidder or any other Bidder, or to fix any overhead, profit, or cost element of the bid price, or of that of any other Bidder. All statements contained in the bid are true. The Bidder has not, directly or indirectly, submitted his or her bid price or any breakdown thereof, or the contents thereof, or divulged information or data relative thereto, to any corporation, partnership, company, association, organization, bid depository, or to any member or agent thereof, to effectuate a collusive or sham bid, and has not paid, and will not pay, any person or entity for such purpose.

Any person executing this declaration on behalf of a Bidder that is a corporation, partnership, joint venture, limited liability company, limited liability partnership, or any other entity, hereby represents that he or she has full power to execute, and does execute, this declaration on behalf of the Bidder.

I declare under penalty of perjury under the laws of the State of California that the foregoing is true and correct and that this declaration is executed on _____ [date], at_____[city],_____[state].

_____
(Signature of Declarant)

DISQUALIFICATION QUESTIONNAIRE

The Bidder shall complete, under the penalty of perjury, the following questionnaire:

Has the Bidder, any officer of the Bidder, or any employee of the Bidder who has proprietary interest in the Bidder, ever been disqualified, removed, or otherwise prevented from bidding on, or completing a federal, state, or local government project because of a violation of law or a safety regulation?

Yes_____ No_____

If the answer is yes, explain the circumstances in the following space.

_____

_____

_____

_____

_____

_____

NAME OF BIDDER: _____

SIGNATURE OF BIDDER: _____

TITLE OF BIDDER: _____

DATE: _____

ACKNOWLEDGEMENT OF INSURANCE AND BOND REQUIREMENTS

Included in the Bid Price is full compensation for the requirements set forth in the INSURANCE BROKER INFORMATION PACKET of the Project Manual.

NAME OF BIDDER: _____

SIGNATURE OF BIDDER: _____

TITLE OF BIDDER: _____

DATE: _____

DISCLAIMER OF WARRANTIES AND ACCURACY OF DATA

Although soil and site investigation reports have been obtained from sources believed to be reliable, no warranty expressed or implied is made regarding accuracy, adequacy, completeness, legality, reliability or usefulness of any information contained therein. These reports are subject to change at any time, may be incomplete, and/or may contain errors. This information is provided for informational purposes only. The City of Roseville provides this information on an "as is" basis. Warranties of any kind, express or implied, or statutory, including but not limited to the implied warranties of merchantability, and fitness for a particular purpose ARE DISCLAIMED to any party viewing these documents or to any third party.

The City of Roseville does not accept and expressly disclaims liability to any party viewing such information, or to any third party whatsoever, for any loss, damage, or injury (including incidental or consequential damages) whether such loss, damage, or injury is the result of negligence, willful or intentional misconduct, or any other cause.

I have read and acknowledged the above disclaimer and agree to hold harmless the City of Roseville on any theory of liability for any loss, damage or injury whether in contract, strict liability or tort arising in any way out of the use or contents of the released information or documents described above or the performance of the work called for herein.

Print Name	Signature
Name of Business/Company/Corporation	Date
Address	Phone

VIII. END OF PROPOSAL

A G R E E M E N T

THIS AGREEMENT, is made and entered into this_____day of_____, 20_____, by and between the City of Roseville, a municipal corporation, ("CITY"), and _____, a_____, ("CONTRACTOR"); and

W I T N E S E T H:

WHEREAS, the City Council of the CITY, at a meeting held on the_____day of _____, 20_____, approved plans and specifications for the

_____

and directed the City Clerk to advertise for sealed proposals for doing said work and providing that bids be submitted on the_____day of_____, 20_____; and

WHEREAS, the City Clerk, thereafter duly and regularly caused a notice to be published in the manner and for the time prescribed by law; and

WHEREAS, CONTRACTOR, pursuant to the provisions of said notice duly filed a bid with the City Clerk, a true copy of which bid is now on file in the office of the City Clerk, and is hereby referred to and by this reference made a part hereof as fully as if set forth at length herein; and

WHEREAS, all bids received pursuant to said notice were opened and examined and publicly declared at the time specified in said advertisement for bids and at a meeting of the City Council held on the_____day of_____, 20_____, the Council found and

declared the bid of CONTRACTOR to be the lowest responsible bid and thereupon awarded a contract to CONTRACTOR to do the work referred to in the aforementioned specifications.

NOW, THEREFORE, the parties agree as follows:

1. THE WORK. CONTRACTOR agrees:

a. To do the work and furnish all the labor, materials, tools, supplies, equipment, superintendence, insurance, and bonds required for the _____

_____

in accordance with the Contract Documents (the Work).

b. To do and perform the Work contemplated hereby in a good and workmanlike manner under the direction of and to the satisfaction of the Director of Public Works of the City of Roseville.

2. PAYMENT. CITY shall pay CONTRACTOR _____

_____ dollars ($_____) for the Work to be done under this Agreement in accordance with the Contract Documents.

3. CONTRACT DOCUMENTS. The complete Agreement between the parties hereto consists of the following documents:

a. The advertisement for bids (including the notice to bidders, instructions to bidders and proposals);

b. The accepted bid;

c. Plans and specifications (including general conditions, supplemental conditions, special provisions and construction details);

d. Bonds and insurance required by the specifications; and

e. This contract.

All documents specified above are intended to operate so that any work called for in any one and not mentioned in the other, or vice versa, is to be executed the same as if mentioned in all said documents.

4. LIQUIDATED DAMAGES. In the event CONTRACTOR does not complete the Work within the time specified, CONTRACTOR agrees that CITY will suffer damages. Inasmuch as the actual damages which would result from such breach by CONTRACTOR under this Agreement are uncertain, and would be impractical or extremely difficult to fix, CONTRACTOR agrees that it shall pay, or CITY shall deduct from CONTRACTOR's fee, the amount of $_____per day as liquidated damages, in the event of such delay.

5. TIME OF COMPLETION. Time is of the essence of this Agreement. CONTRACTOR shall complete all Work under the Contract Documents within_____Days of the date of this Contract. CONTRACTOR shall begin work by the date specified in the "Notice to Proceed" letter and shall diligently prosecute all of the Work under this Contract in all parts and requirements as defined in the Contract Documents.

6. SERVICE OF NOTICE. Any notice required or permitted to be given under this Agreement shall be deemed given when (a) personally delivered to the recipient identified below; (b) mailed by registered or certified mail, return receipt requested, postage pre-paid, to the address specified below; or (c) sent by facsimile, with confirmation of receipt, to the facsimile number identified below.

CITY OF ROSEVILLE	CONTRACTOR
_____	_____
_____	_____
_____	_____
_____	_____

CITY may also act through either its architect or construction manager if CITY expressly gives notice to CONTRACTOR, in writing, that CITY's designee has authority to act for CITY in a specific capacity.

7. DISPUTES. Disputes arising from this Agreement will be determined in accordance with the Contract Documents and Public Contract Code Sections 10240-10240.13.

8. GOVERNING LAW. This Agreement shall be governed by and construed in accordance with the laws of the State of California.

9. INDEPENDENT CONTRACTOR. CONTRACTOR shall act as an independent contractor, and covenants and agrees that it will conduct itself consistent with such status, that it will neither hold itself out as, nor claim to be, an officer or employee of CITY by reason of this Agreement.

10. SUCCESSORS IN INTEREST. This Agreement shall be binding upon the heirs, successors, executors, administrators and assigns of the respective parties hereto.

11. MODIFICATION. This Agreement and each provision contained herein may be waived, amended, supplemented or eliminated only by mutual written agreement of the parties.

12. SEVERABILITY. If any of the provisions contained in this Agreement are for any reason held invalid or unenforceable, such holding shall not affect the remaining provisions or the validity and enforceability of the Agreement as a whole.

13. INTEGRATED AGREEMENT. This is an integrated agreement and contains all of the terms, considerations, understanding and promises of the parties. It shall be read as a whole.

14. CONTRACTORS LICENSE LAW. CONTRACTORS ARE REQUIRED BY LAW TO BE LICENSED AND REGULATED BY THE CONTRACTORS' STATE LICENSE

BOARD WHICH HAS JURISDICTION TO INVESTIGATE COMPLAINTS AGAINST CONTRACTORS IF A COMPLAINT REGARDING A PATENT ACT OR OMISSION IS FILED WITHIN FOUR (4) YEARS OF THE DATE OF THE ALLEGED VIOLATION. A COMPLAINT REGARDING A LATENT ACT OR OMISISON PERTAINING TO STRUCUTRAL DEFECTS MUST BE FILED WITHIN TEN (10) YEARS OF THE DATE OF THE ALLEGED VIOLATION. ANY QUESTIONS CONCERNING A CONTRACTOR MAY BE REFERRED TO THE REGISTRAR, CONTRACTORS' STATE LICENSE BOARD, P.O. BOX 26000, SACRAMENTO, CALIFORNIA 95826.

IN WITNESS WHEREOF, the City of Roseville, a municipal corporation, has authorized the execution of this Agreement in duplicate by its City Manager and attestation by its City Clerk under authority of Resolution No._, adopted by the Council of the City of Roseville on the ____day of_____, 20_____, and CONTRACTOR has caused this Agreement to be duly executed.

CITY OF ROSEVILLE, a municipal corporation

BY:_____
DOMINICK CASEY
City Manager

ATTEST:

BY:_____
CARMEN AVALOS
City Clerk

_____, a _____

BY: _____
its: _____

and

BY: _____
its: _____

APPROVED AS TO FORM:

BY:_____
MICHELLE SHEIDENBERGER
City Attorney

APPROVED AS TO SUBSTANCE:

BY: _____

Print Name:_____

Title:_____

INSURANCE BROKER INFORMATION PACKET

Project:_____

NOTICE TO CONTRACTOR:

For your convenience, this package contains the Requirements for Insurance and Bonds for this project, including the necessary City forms. You are required to return these forms in addition to the executed Contract within fifteen (15) calendar days after the award of the Bid, unless otherwise directed by City in writing. (See the Instructions to Bidders.)

Please insert the dollar amount of your accepted Bid into the blank on page INS-1 and present this entire package to your insurance broker if you are awarded the Bid.

TABLE OF CONTENTS

	Page
Notice to Insurance Broker	INS 1
Insurance Requirements	INS 2
Public Works Faithful Performance Bond	INS 10
Public Works Payment Bond	INS 13

NOTICE TO INSURANCE BROKER

Your client has been awarded a bid by the City Council of the City of Roseville to perform a public works project known as_____. The Contract Conditions for that project require your client ("the Contractor") to return certain evidence of insurance and bonds to the City Attorney of the City within fifteen (15) days after the Bid award, unless otherwise directed by the City in writing, or else the Bid award may be terminated and awarded to another company.

This package contains the information you will need as an insurance broker to provide the appropriate insurance and bonds to the City. The insurance coverages the Contractor needs are specified in the section entitled "Insurance Requirements." Please note that, in addition to the insurance certificate itself, copies of several endorsements must be actually furnished.

Please refer to the Supplemental Conditions for modifications of the General Conditions, if any, and the requirements of this insurance packet.

Please use the standard City of Roseville Bond Forms provided in this package.

The Bonds required must each be in the penal amount of: $_____.

Bonds must be sent to the following staff person:

_____

_____

_____

Insurance documents must be provided using one of the following methods:

a. By email to roseville@ebix.com

b. By fax to (770) 335-5727

After using one of these methods, please **DO NOT** also send the insurance certificate(s) by mail.

c. Or mail the documents to

City of Roseville
Insurance Compliance
P.O. Box 100085-R1
Duluth, GA 30096

When forwarding the documents, please refer to the project name so that the documents can be matched with the Contract for which they are submitted.

Thank you.

INSURANCE REQUIREMENTS

The following sections are quoted from the General Conditions:

5-1.23 **INSURANCE COVERAGE.**

A. Evidence of Maintenance Required. The Contractor shall, at its expense, procure and at all times maintain in full force and effect at a minimum the insurance required by this section on all of its operations; and the Contractor shall not allow any Subcontractor to commence work until similar insurance required of the Subcontractor has been obtained and filed. An original Certificate of Insurance, and copies of all required endorsements, all in a form approved by the Risk Manager, evidencing all required coverage or policies shall be filed after the award of the bid and prior to approval of the Contract by the City Council. Contractor shall provide ten (10) days prior written notice to the City of any reduction of coverage limits or cancellation of the coverage or policies shall be given to the City of Roseville as Certificate holder.

B. Qualifying Insurers. With the exception of the State Compensation Insurance Fund, all required insurance policies shall be issued by companies acceptable to the City and licensed to do business in the State of California and who hold a current policy holders alphabetic and financial size category rating of not less than AVII according to the most recent issue of Best's Insurance Reports.

C. Insurance Required.

1. **Commercial General Liability (CGL):** Insurance Services Office Form CG 00 01 covering CGL on an "occurrence" basis, including products and completed operations with limits of no less than Two Million Dollars ($2,000,000) per occurrence for bodily injury, personal injury and property damage for projects under One Million Dollars ($1,000,000) and

limits of no less than Five Million Dollars ($5,000,000) per occurrence for bodily injury, personal injury and property damage for projects over One Million Dollars ($1,000,000). If a general aggregate limit applies, either the aggregate limit shall apply separately to this project or the general aggregate limit shall be twice the required occurrence limit.

The Commercial General Liability insurance shall include the following, copies of which shall be provided:

a. Inclusion of the City of Roseville, and its officers, agents, employees, and volunteers, as additional insureds (except for workers' compensation) as respects services or operations under the Contract. The additional insured endorsement for the general liability policy shall be at least as broad as the ISO CG 2010 10 01 combined with ISO CGL Endorsement CG 2037 10 01. Any other endorsement must be approved in writing by the City. Endorsements must include coverage for on-going and completed operations, which coverage shall be maintained for four (4) years following completion of the Project. Endorsements shall cover the City of Roseville, its officers, agents, employees, and volunteers.

b. The insurance shall provide coverage for claims by one insured against another insured and the policies shall not contain any cross-suits exclusions, cross-liability exclusions, or insured versus insured exclusions. The policies shall not contain any classification exclusions purporting to deny coverage for any work to be performed by Contractor or any of its Subcontractors.

c. Stipulation that the insurance is primary and noncontributory, as evidenced by a separate endorsement (CG 20 01 04 13 or an equivalent) or section of the policy, and that neither the City nor its insurers will be called upon to contribute to a loss.

d. Such insurance shall specifically cover the contractual liability of

the Contractor.

e. Any available insurance proceeds in excess of the specified minimum insurance coverage requirements and limits shall be available to the additional insureds. Furthermore, the requirements for coverage and limits shall be: (1) the minimum coverage and limits specified in this Agreement; or (2) the full coverage and maximum limits of any insurance proceeds available to the named insureds, whichever is greater.

f. Waiver of subrogation endorsement.

g. The Contractor shall furnish a certificate for the period covered.

2. **Automobile Liability:** Insurance Services Office Form Number CA 0001 covering Code 1 (any auto), or if Contractor has no owned autos, Code 8 (hired) and Code 9 (non-owned), with limits of no less than One Million Dollars ($1,000,000) per accident for bodily injury and property damage.

3. **Workers' Compensation:** In accordance with the provisions of the California Labor Code, Contractor is required to be insured against liability for Workers' Compensation or to undertake self-insurance. Statutory Workers' Compensation and Employers' Liability of at least One Million Dollars ($1,000,000) shall cover all Contractors staff while performing any work incidental to the performance or this Agreement.

4. **Professional Liability:** Professional Liability (Errors and Omission) Insurance appropriate to Contractor’s profession, with a limit of liability not less than One Million Dollars ($1,000,000) per occurrence or claim and Two Million Dollars ($2,000,000) aggregate to cover all design and engineering services rendered by Contractor pursuant to the Agreement. Coverage must commence from the first day that Contractor or any of its Subcontractors provided any design or engineering services in connection with the Project.

5. **Builder's Risk/Course of Construction Insurance Is____OR Is Not ____ Required by Risk Management:** The Contractor shall be responsible for all loss, damage or destruction whatsoever to the work called for by this Contract until the approval of a Notice of Completion or acceptance of the Work if no Notice of Completion is to be recorded.

The Contractor shall secure "All Risk" type of builder's Risk Insurance of the type covering one hundred percent (100%) of the value of the work performed under this Contract (the value is presumed to be the Contract amount unless otherwise stated in Supplemental Conditions) and all materials, equipment, or other items to be incorporated therein while the same are located at the construction site, a bonded warehouse, or its place of manufacture. At any time, the policy shall cover the value of the work completed. The policy shall cover hazards including the losses due to fire, explosion, hail, rain, lightning, flood (separate insurance as needed), vandalism, malicious mischief, wind, collapse, aircraft, and smoke.

The policies providing such insurance shall name the City as a loss payee as its respective interests may appear, and certified copies of such policies shall be filed with the City. The maximum deductible allowable under the Builder's All Risk policy shall be five percent (5%) of the Contract amount.

Builder's Risk Insurance is not required for coverage of losses in excess of five percent (5%) of the Contract amount for damages resulting from earthquake in excess of a magnitude of 3.5 on the Richter scale, or tidal waves. Coverage in the amount of five percent (5%) of the Contract amount for such losses is required.

6. **Pollution Coverage:** Contractor shall procure pollution liability coverage or other insurance covering claims for bodily injury or property damage arising out of the abatement, removal, storage, transportation, or other exposure to hazardous materials or

pollutants, in limits not less than Two Million Dollars ($2,000,000). Contractor shall add the City and all parties required to be indemnified by Contractor as additional insured on all pollution liability policies.

7. **Higher Coverage Limits:** If Contractor maintains higher coverage limits than the amounts shown above, then the City requires and shall be entitled to coverage for the higher coverage limits maintained by Contractor. Any available insurance proceeds in excess of the specified minimum limits of insurance and coverage shall be available to the City.

8. **Claims Made Coverage:** Liability insurance coverage may not be written on a "claims made" or modified occurrence basis. The Certificate of Insurance must clearly provide that the coverage is on an "occurrence" basis.

5-1.24 **OTHER INSURANCE PROVISIONS.**

A. The requirements of the Standard Specifications as to types and limits of insurance coverage to be maintained by the Contractor, and any approval of insurance by the City, are not intended to, and shall not in any manner limit or qualify the liabilities and obligations otherwise assumed by the Contractor pursuant to the Contract, including, but not limited to, the provisions concerning indemnification, nor preclude the City from taking any other action available to it under any other provision of the Contract or law.

B. The City acknowledges that some insurance requirements contained in these Standard Specifications may be fulfilled by self-insurance on the part of the Contractor. However, this shall not in any way limit liabilities assumed by Contractor under the Contract. Any self-insurance must be approved in writing by the City, in its sole discretion and shall not reduce the limits of liability. Any deductibles or self-insured retentions ("SIR") must be declared on the certificate of insurance and approved by City in writing. Policies containing any

SIR provision shall provide or be endorsed to provide that the SIR may be satisfied by either the named insured or City. City reserves the right to obtain a full certified copy of any insurance policy and endorsements. The failure to exercise this right shall not constitute a waiver of such right.

C. The Contractor agrees to include in its contracts with all subcontractors the same requirements and provisions of this Contract, including the indemnity and insurance requirements, to the extent they apply to the scope of the subcontractor's work. Furthermore, the Contractor shall require its subcontractors to agree to be bound to the Contractor and the City in the same manner and to the same extent as the Contractor is bound to the City under this Contract. Additionally, the Contractor shall obligate its subcontractors to comply with these same provisions with respect to any tertiary subcontractor, regardless of tier. A copy of the City's indemnity and insurance provisions will be furnished to the subcontractor or tertiary subcontractor upon request. Alternatively, the Contractor may insure subcontractor(s) under its own policy.

D. The City, its officers, agents, employees, and volunteers are to be covered as insureds with respect to liability arising out of automobiles owned, leased, hired or borrowed by or on behalf of the Contractor; and with respect to liability arising out of work or operations performed by or on behalf of the Contractor including materials, parts or equipment furnished in connection with such work or operations. Coverage shall not extend to any indemnity coverage for the active negligence of the additional insured in any case where an agreement to indemnify the additional insured would be invalid under California Insurance Code Section 11580.04.

E. The limits of insurance required in this Contract may be satisfied by a combination of primary and excess insurance. Any excess insurance shall contain or be

endorsed to contain a provision that such coverage shall also apply on a primary and noncontributory basis for the benefit of the City (if agreed to in a written contract) before the City's own insurance shall be called upon to protect it as a named insured.

F. The insurance procured by Contractor shall be subject to the approval of the City, but any acceptance of insurance certificates by the City shall in no way limit or relieve Contractor of its duties and responsibilities under the Agreement.

G. Contractor shall be responsible for all premiums, deductibles, and self-insured retention applicable to the insurance it is required to procure under the Contract. All deductibles or self-insured retentions over five hundred thousand dollars ($500,000) must be approved by the City, in writing. Contractor shall be responsible for all deductibles, self-insured retention payments, and/or increased premiums incurred if the City's policies of insurance are forced to cover damages or respond to claims for which Contractor or its Subcontractors were obligated to provide insurance under the Contract.

H. Failure of the City to enforce in a timely manner any of the requirements of these insurance provisions shall not act as a waiver to enforcement of any of these provisions at a later date.

I. Contractor's indemnity obligations shall not be limited by these insurance provisions and shall survive the expiration of the Contract and the insurance provisions of the Contract shall likewise not be limited by the indemnity provisions of the Contract.

J. THE CITY RESERVES THE RIGHT TO WITHHOLD ANY PROGRESS PAYMENTS TO THE CONTRACTOR IN THE EVENT OF NONCOMPLIANCE WITH ANY INSURANCE REQUIREMENTS.

Bond No. _____
Premium $_____

IX. PUBLIC WORKS
FAITHFUL PERFORMANCE BOND

(Project:_____)

WHEREAS, the City of Roseville ("CITY") has awarded a bid and contract to _____ as contractor ("PRINCIPAL") for the public work described as _____ _____ (the "WORK"). The contract ("AGREEMENT"), for the public work described above, and all of its terms and conditions are incorporated by reference and made a part hereof; and

WHEREAS, the PRINCIPAL is required to furnish a bond in connection with the AGREEMENT guaranteeing its faithful performance; and

NOW, THEREFORE, we the undersigned PRINCIPAL and _____ _____, a_____, admitted and duly authorized to transact business under the laws of the State of California, as SURETY ("SURETY"), are held and firmly bound unto the CITY or its successors and assigns in the sum of _____ dollars ($_____) (which amount is not less than 100% of the AGREEMENT price) to be paid to the CITY or its successors and assigns; and for which payment, well and truly to be made, we bind ourselves, our heirs, executors and administrators, successors or assigns jointly and severally, firmly by these presents.

The condition of this obligation is such that if the PRINCIPAL, or its heirs, executors, administrators, successors or assigns, shall abide by, and in all respects promptly and faithfully perform the covenants, conditions and provisions in said AGREEMENT and any alteration thereof made as therein provided, notice of which alterations to Surety being hereby waived, on its part to be kept and performed at the time and in the manner therein specified, and in all respects according to their true intent and meaning, and shall indemnify and save harmless CITY, its officers, agents, employees, volunteers as therein stipulated, then this obligation shall be null and void; otherwise, this obligation shall be and remain in full force and effect.

As condition precedent to the satisfactory completion of the contract, the obligation of the PRINCIPAL and SURETY under this Bond shall remain in effect for a period of one (1) year after the completion and acceptance of the WORK. During that time, if the PRINCIPAL, its heirs, executors, administrators, successors or assigns fails to make full, complete and satisfactory repair and replacement or totally protect the CITY from any loss or damage made evident during that year which results from or is caused by either defective materials or faulty workmanship in the prosecution of the WORK, then the obligation shall remain in full force and effect. However, anything in

this paragraph to the contrary notwithstanding, the obligation of the SURETY shall continue so long as any obligation of the PRINCIPAL remains.

No prepayment or delay in payments, and no change, extension, addition or alteration of any provision of the AGREEMENT or in the specifications agreed to between the PRINCIPAL and the CITY, or any forbearance on the part of the CITY shall operate to relieve the SURETY. The SURETY hereby waives the provisions of Section 2819 of the California Civil Code. The SURETY waives all rights of subrogation against the CITY or any person employed by the CITY. If the contract price increases by the issuance of change orders, the amount specified in this bond shall increase by the same amount.

Whenever PRINCIPAL shall be and declared by CITY to be in default under the AGREEMENT, SURETY shall promptly remedy the default, or shall promptly do one of the follow at CITY's election:

1. Undertake through its agents or independent contractors, reasonably acceptable to CITY, to complete the AGREEMENT in accordance with its terms and conditions and to pay and perform all obligations of PRINCIPAL under the AGREEMENT, including without limitation, all obligations with respect to warranties, guarantees, and the payment of liquidated damages.

2. Reimburse CITY for all costs CITY incurs in completing the AGREEMENT, and in correcting, repairing or replacing defects in materials or workmanship and/or materials and workmanship which do not conform to the specifications in the AGREEMENT.

SURETY's obligations hereunder are independent of the obligations of any other surety for the performance of the AGREEMENT, and suit may be brought against SURETY and such other sureties, jointly and severally, or against any one or more of them, or against less than all of them without impairing CITY's rights against the others.

No right of action shall accrue on this bond to or for the use of any person or corporation other than CITY or its successors or assigns.

As part of the obligation secured hereby and in addition to the face amount specified therefore, there shall be included costs and reasonable expenses and fees, including reasonable attorneys' fees, incurred by CITY in successfully enforcing such obligation, all to be taxed as costs and included in any judgment rendered.

[SIGNATURES NEXT PAGE]

IN WITNESS WHEREOF, this instrument has been duly executed by the PRINCIPAL and SURETY above-named, on the_____day of_____, 20___.

PRINCIPAL:	SURETY:
BY:_____	BY:_____
PRINT NAME:_____	**PRINT NAME:**_____
PRINT TITLE:_____	**PRINT TITLE:**_____
AND	MAILING ADDRESS:
BY: _____	_____
PRINT NAME:_____	_____
PRINT TITLE:_____	_____

(Notarization by Surety and copy of Power of Attorney required.)

APPROVED AS TO FORM:

BY: _____
City Attorney

Bond No. _____
Premium $_____

X. PUBLIC WORKS
LABOR AND MATERIALS PAYMENT BOND

(Project:_____)

WHEREAS, the City of Roseville ("CITY"), has awarded a bid and contract to _____ as contractor ("PRINCIPAL"), for the public work described as _____ _____ (the "WORK"). The contract ("AGREEMENT"), for the public work described above, and all of its terms and conditions are incorporated by reference and made a part hereof; and

WHEREAS, the PRINCIPAL is required to furnish a bond in connection with the AGREEMENT guaranteeing payment of persons who provide labor and material; and

NOW, THEREFORE, we the undersigned PRINCIPAL and _____ _____, a_____, admitted and duly authorized to transact business under the laws of the State of California, as SURETY ("SURETY"), are held and firmly bound unto the CITY or its successors and assigns in the sum of _____ dollars ($_____) (which amount is not less than 100% of the AGREEMENT price) to be paid to the CITY or its successors and assigns; and for which payment, well and truly to be made, we bind ourselves, our heirs, executors and administrators, successors or assigns jointly and severally, firmly by these presents.

The condition of the obligation is such that if the PRINCIPAL, its subcontractors, heirs, executors, administrators, successors or assigns fails to pay any of the persons named in Section 8004 or 9100 of the Civil Code of the State of California, or the amounts due under the Unemployment Insurance Code of the State of California, or any amounts required to be deducted, withheld and paid over to the Employment Development Department from the wages of employees of the PRINCIPAL and its subcontractors pursuant to Section 13020 of the Unemployment Insurance Code, with respect to work or labor performed by any such claimant, that the SURETY will pay for the same, in an amount not exceeding the sum specified in this bond, and also, in case suit is brought upon the bond, shall pay reasonable attorneys' fees, to be fixed by the Court.

This bond shall inure to the benefit of any and all persons, companies, and corporations entitled to file a Stop Payment Notice pursuant to the provisions of Section 9350 et seq. of the Civil Code of the State of California, so as to give a right of action to them or their assigns in any suit brought upon this bond.

No prepayment or delay in payments, and no change, extension, addition or alteration of any provision of the AGREEMENT or in the specifications agreed to between the PRINCIPAL and the CITY, or any forbearance on the part of the CITY shall operate to relieve the SURETY. The SURETY hereby waives the provisions of Section 2819 of the California Civil Code. The SURETY waives all rights of subrogation against the CITY or any person employed by the CITY. If the contract price increases by the issuance of change orders, the amount specified in this bond shall increase by the same amount.

As part of the obligation secured hereby and in addition to the face amount specified therefore, there shall be included costs and reasonable expenses and fees, including reasonable attorneys' fees, incurred by CITY in successfully enforcing such obligation, all to be taxed as costs and included in any judgment rendered.

IN WITNESS WHEREOF, this instrument has been duly executed by the PRINCIPAL and SURETY above-named, on the_____day of_____, 20_.

PRINCIPAL:	SURETY:
BY:_____	BY:_____
PRINT NAME:_____	**PRINT NAME:**_____
PRINT TITLE:_____	**PRINT TITLE:**_____
AND	MAILING ADDRESS:
BY: _____	_____
PRINT NAME:_____	_____
PRINT TITLE:_____	_____

(Notarization by Surety and copy of Power of Attorney required.)

APPROVED AS TO FORM:

BY: _____
City Attorney

CITY OF ROSEVILLE

GENERAL CONDITIONS

FOR

BUILDINGS AND GROUNDS

XI. CITY OF ROSEVILLE GENERAL CONDITIONS FOR BUILDINGS AND GROUNDS

SECTION 1: DEFINITIONS AND TERMS GC-1:1

1-1.01 GENERAL GC-1:1
1-1.02 ACCEPTANCE GC-1:1
1-1.03 ADDENDUM GC-1:1
1-1.04 AS-BUILT DOCUMENTS, AS-BUILT DRAWINGS AND RECORD DOCUMENTS GC-1:1
1-1.05 ASSESSMENT GC-1:1
1-1.06 BENEFICIAL OCCUPANCY GC-1:2
1-1.07 BID GUARANTY GC-1:2
1-1.08 BIDDER GC-1:2
1-1.09 BIDDING DOCUMENTS GC-1:2
1-1.10 CHANGE ORDER GC-1:2
1-1.11 CITY GC-1:2
1-1.12 CITY ATTORNEY GC-1:2
1-1.13 CITY CLERK GC-1:2
1-1.14 CLAIM GC-1:2
1-1.15 CONSTRUCTION SCHEDULE GC-1:3
1-1.16 CONTRACT OR AGREEMENT GC-1:3
1-1.17 CONTRACT CONDITIONS GC-1:3
1-1.18 CONTRACT DOCUMENTS GC-1:3
1-1.19 CONTRACT DRAWINGS GC-1:3
1-1.20 CONTRACT PRICE GC-1:4
1-1.21 CONTRACT TIME GC-1:4
1-1.22 CONTRACTOR GC-1:4
1-1.23 DAY OR DAYS GC-1:4
1-1.24 DEPARTMENT GC-1:4
1-1.25 DIRECT COSTS GC-1:4
1-1-26 DIRECTOR. GC-1:6
1-1.27 EMERGENCY. GC-1:6
1-1.28 ENGINEER OR ARCHITECT GC-1:7
1-1.29 FINAL COMPLETION GC-1:7
1-1.30 FORCE ACCOUNT GC-1:7
1-1.31 GENERAL NOTES GC-1:7
1-1.32 INSTALLATION, INSTALL GC-1:7
1-1.33 LABORATORY GC-1:7
1-1.34 LEGAL HOLIDAYS GC-1:7
1-1.35 LIQUIDATED DAMAGES GC-1:7
1-1.36 NOTICE OF COMPLETION GC-1:8
1-1.37 NOTICE TO PROCEED GC-1:8
1-1.38 NOTICE OF TERMINATION GC-1:8

1-1.39 OVERHEAD....GC-1:8
1-1.40 PREMISES....GC-1:9
1-1.41 PROFESSIONAL ENGINEER....GC-1:9
1-1.42 PROJECT MANUAL....GC-1:9
1-1.43 PROPOSAL FORMS....GC-1:9
1-1.44 REQUEST FOR INFORMATION (RFI)....GC-1:9
1-1.45 SAFETY....GC-1:9
1-1.46 SCHEDULE OF VALUES....GC-1:9
1-1.47 SHOP DRAWINGS....GC-1:10
1-1.48 SPECIFICATIONS....GC-1:10
1-1.49 SUBCONTRACTOR....GC-1:10
1-1.50 SUBMITTALS....GC-1:10
1-1.51 SUPPLEMENTAL CONDITIONS....GC-1:10
1-1.52 SUPPLIER....GC-1:10
1-1.53 WORK....GC-1:11
1-1.54 WORK SITE....GC-1:11
1-1.55 WORKING DRAWINGS....GC-1:11

SECTION 2: CONTROL AND SCOPE OF THE WORK....GC-2:1

2-1.01 AUTHORITY OF DIRECTOR....GC-2:1
2-1.02 INTENT OF CONTRACT DOCUMENTS....GC-2:1
2-1.03 EXAMINATION AND VERIFICATION OF CONTRACT DOCUMENTS....GC-2:2
2-1.04 CONTRACT DRAWINGS....GC-2:3
2-1.05 COORDINATION AND INTERPRETATION OF CONTRACT DOCUMENTS....GC-2:3
2-1.06 INDEPENDENT CONTRACTOR STATUS....GC-2:5
2-1.07 ORDER OF WORK....GC-2:5
2-1.08 SUBMITTALS....GC-2:5
2-1.08A SHOP DRAWINGS....GC-2:6
2-1.08B DESCRIPTIVE DATA....GC-2:7
2-1.08C SAMPLES....GC-2:7
2-1.08D MANUALS, INSTRUCTIONS AND AFFIDAVIT....GC-2:7
2-1.08E ALTERNATIVES....GC-2:10
2-1.09 DISPOSAL OF MATERIAL OUTSIDE THE WORK SITE....GC-2:12
2-1.10 ACCESS TO THE WORK....GC-2:12
2-1.11 TEMPORARY UTILITIES....GC-2:12
2-1.12 UTILITY FACILITIES....GC-2:13
2-1.13 PRESERVATION AND CLEANING....GC-2:14
2-1.14 LIMITATIONS ON WORK SITE AND PREMISES....GC-2:14
2-1.15 DUST CONTROL....GC-2:15
2-1.16 SANITATION....GC-2:15
2-1.17 NIGHT WORK AND NORMAL WORKING HOURS....GC-2:15
2-1.18 LINES AND GRADES....GC-2:16
2-1.19 ARCHEOLOGICAL DISCOVERIES....GC-2:17
2-1.20 PRESERVATION OF MONUMENTS....GC-2:17
2-1.21 CONFORMITY WITH CONTRACT DOCUMENTS....GC-2:18

2-1.22 FINAL CLEANUP GC-2:18
2-1.23 AS-BUILT DOCUMENTS AND DRAWINGS GC-2:18
2-1.24 SUPERINTENDENCE GC-2:19
2-1.25 CHARACTER OF WORKER GC-2:20
2-1.26 INSPECTION GC-2:20
2-1.27 REMOVAL OF REJECTED AND UNAUTHORIZED WORK GC-2:21

SECTION 3: CHANGES IN THE WORK GC-3:1

3-1.01 CHANGES GC-3:1
3-1.02 PROPOSED CHANGE ORDERS GC-3:2
3-1.03 EMERGENCY AND INDETERMINATE TYPE CHANGE ORDERS GC-3:3
3-1.04 EXECUTED CHANGE ORDER GC-3:3
3-1.05 CONTRACT PRICE ADJUSTMENT GC-3:3
3-1.06 FORCE ACCOUNT PAYMENT GC-3:5
3-1.06A LABOR GC-3:6
3-1.06B MATERIALS GC-3:6
3-1.06C EQUIPMENT GC-3:7
3-1.06D MARKUPS GC-3:8
3-1.06E RECORDS GC-3:9
3-1.07 COST REDUCTION PROPOSALS GC-3:11

SECTION 4: CONTROL OF MATERIALS GC-4:1

4-1.01 MATERIALS GC-4:1
4-1.02 PRODUCT AND REFERENCE STANDARDS GC-4:2
4-1.03 SAMPLING AND TESTING OF MATERIALS GC-4:2
4-1.04 CERTIFICATES OF COMPLIANCE GC-4:7

SECTION 5: LEGAL RELATIONS AND RESPONSIBILITY GC-5:1

5-1.01 LAWS TO BE OBSERVED GC-5:1
5-1.02 HOURS OF LABOR GC-5:1
5-1.03 NONDISCRIMINATION GC-5:2
5-1.04 PREVAILING WAGE GC-5:3
5-1.05 REGISTRATION REQUIRED AS QUALIFICATION TO BID GC-5:6
5-1.06 PAYROLL RECORDS GC-5:7
5-1.07 SAFETY REQUIREMENTS GC-5:10
5-1.08 SUBSURFACE EXCAVATIONS, NOTIFICATION GC-5:15
5-1.09 PUBLIC SAFETY GC-5:15
5-1.10 EMERGENCIES GC-5:17
5-1.11 APPRENTICES GC-5:18
5-1.12 FAIR LABOR STANDARDS ACT GC-5:18
5-1.13 WORKERS' COMPENSATION GC-5:19
5-1.14 AIR POLLUTION CONTROL AND ASBESTOS GC-5:19
5-1.15 USE OF PESTICIDES GC-5:20
5-1.16 SOUND AND LIGHT CONTROL REQUIREMENTS GC-5:20
5-1.17 WEIGHT LIMITATIONS GC-5:21
5-1.18 ENVIRONMENTAL CLEARANCES; MITIGATION MONITORING PROGRAMS; AND REGULATORY AGENCY PERMIT

REQUIREMENTS....GC-5:21
5-1.19 PERMITS AND LICENSES....GC-5:21
5-1.20 WATER POLLUTION....GC-5:22
5-1.21 PROTECTION AND USE OF PROPERTY....GC-5:23
5-1.22 RESPONSIBILITY FOR DAMAGE AND INDEMNIFICATION....GC-5:24
5-1.23 INSURANCE COVERAGE....GC-5:26
5-1.24 OTHER INSURANCE PROVISIONS....GC-5:31
5-1.25 THIRD PARTY BENEFICIARY....GC-5:33
5-1.26 COORDINATION AND ACCESS....GC-5:33
5-1.27 OCCUPANCY BY THE DEPARTMENT PRIOR TO ACCEPTANCE..GC-5:34
5-1.28 RIGHT TO OPERATE UNSATISFACTORY FACILITIES AND EQUIPMENT....GC-5:35
5-1.29 CONTRACTOR'S RESPONSIBILITY FOR THE WORK....GC-5:36
5-1.30 RESPONSIBILITY FOR UTILITIES....GC-5:37
5-1.31 PROPERTY RIGHTS IN MATERIALS....GC-5:39
5-1.32 COURT ORDERED DELAY....GC-5:39
5-1.33 NO PERSONAL LIABILITY....GC-5:39
5-1.34 RIGHTS IN LAND AND IMPROVEMENTS....GC-5:40
5-1.35 ANTITRUST CLAIMS....GC-5:40
5-1.36 RIGHTS TO DRAWINGS, TECHNICAL DATA PATENTS....GC-5:40
5-1.37 PAYMENT OF TAXES....GC-5:41
5-1.38 GRATUITIES AND CONFLICT OF INTEREST....GC-5:42
5-1.39 COOPERATION....GC-5:43
5-1.40 DIGGING TRENCHES OR OTHER EXCAVATIONS....GC-5:43
5-1.41 CONTRACTOR REGISTRATION....GC-5:44
5-1.42 CITY OF ROSEVILLE ENCROACHMENT PERMITS AND RIGHTS-OF-WAY....GC-5:45

SECTION 6: PROSECUTION AND PROGRESS....GC-6:1

6-1.01 SUBLETTING AND SUBCONTRACTING....GC-6:1
6-1.02 ASSIGNMENT....GC-6:2
6-1.03 BEGINNING OF WORK....GC-6:2
6-1.04 PROGRESS SCHEDULE.....GC-6:3
6-1.05 SCHEDULE OF VALUES....GC-6:9
6-1.06 CITY'S RIGHT TO STOP WORK....GC-6:9
6-1.07 TIME OF COMPLETION....GC-6:11
6-1.08 LIQUIDATED DAMAGES....GC-6:12
6-1.09 DELAYS AND EXTENSIONS TO THE WORK....GC-6:13
6-1.10 TERMINATION....GC-6:18
6-1.10A TERMINATION OF AGREEMENT – CONVENIENCE OF CITY.. GC-6:18
6-1.10B TERMINATION OF AGREEMENT - FOR CAUSE....GC-6:21

SECTION 7: ACCEPTANCE AND PAYMENT....GC-7:1

7-1.01 ACCEPTANCE....GC-7:1
7-1.02 SCOPE OF PAYMENT....GC-7:2
7-1.03 NOTICE OF POTENTIAL CLAIM....GC-7:2
7-1.04 CLAIMS....GC-7:5

7-1.05 DISPUTE RESOLUTION PROCEDURE GC-7:6
7-1.06 STOP PAYMENT NOTICES GC-7:7
7-1.07 PROGRESS PAYMENTS GC-7:7
7-1.08 PAYMENT FOR MATERIALS AND EQUIPMENT ON HAND GC-7:9
7-1.09 RETENTION ON PROGRESS PAYMENTS GC-7:11
7-1.10 FINAL PAYMENT GC-7:12
7-1.11 CLERICAL ERRORS GC-7:14
7-1.12 WARRANTY GC-7:14
7-1.13 WARRANTY OF TITLE GC-7:16

SECTION 1

DEFINITIONS AND TERMS

1-1.01 **GENERAL.** When the following abbreviations and terms or pronouns in place of them appear in the Contract Documents, the intent and meaning shall be interpreted as provided in this Section 1.

1-1.02 **ACCEPTANCE.** Formal Acceptance by resolution by the Roseville City Council of the Contract when completed in all respects in accordance with the Contract Documents and any modifications previously approved.

1-1.03 **ADDENDUM.** Written interpretation or revision to any of the Contract Documents issued by the City before the bid opening.

1-1.04 **AS-BUILT DOCUMENTS, AS-BUILT DRAWINGS AND RECORD DOCUMENTS.** As-Built Documents, As-Built Drawings and Record Documents are all contract documents modified to reflect changes during the construction phase. Specifically, As-Built Documents/Drawings are a revised set of drawings submitted by the Contractor upon Final Completion of a project. They reflect changes made in the Specifications and Working Drawings during the construction process, and show the exact dimensions, geometry, and location of all elements of the work completed under the Contract. Record Documents, on the other hand, are compiled by the Engineer or Architect based on the As-Built Documents/Drawings submitted by the Contractor. They reflect the Engineer or Architect's concurring review of what changes were denoted, why they were made and where they occurred and create a record set of drawings.

1-1.05 **ASSESSMENT.** A cost imposed on the Contractor for non-compliance

with certain contractual requirements.

1-1.06 **BENEFICIAL OCCUPANCY.** The taking possession of a portion of the Work by the City for its use and/or occupancy on other than a temporary or emergency basis.

1-1.07 **BID GUARANTY.** The cashier's, certified check, irrevocable standby letter of credit, deposit of securities, or Bidder's Bond, accompanying the bid submitted by the Bidder, as a guaranty that the Bidder will enter into an agreement with the City for the performance of the Work, if the Agreement is awarded to Bidder, and the Bidder will submit the required Contract Bonds and Certificate of Insurance. Also referred to as the Bidder's Security.

1-1.08 **BIDDER.** Individual, firm, partnership, limited liability company, corporation, joint venture, or any combination thereof, submitting a Proposal for the Work, acting directly, or through a duly authorized representative.

1-1.09 **BIDDING DOCUMENTS.** Includes the Notice to Bidders, Bidding Requirements, Contract Conditions, Drawings, and Addenda.

1-1.10 **CHANGE ORDER.** Any written order to the Contractor directing an addition, deletion, or modification of the Work, or an adjustment in the Contract Price or Contract Time provided in the Contract Documents and issued after the Agreement has been signed.

1-1.11 **CITY.** The City of Roseville.

1-1.12 **CITY ATTORNEY.** The City Attorney of the City.

1-1.13 **CITY CLERK.** The City Clerk of the City.

1-1.14 **CLAIM.** A separate demand by Contractor sent by registered mail or certified mail with return receipt requested, for one or more of the following: (a) a time extension, including, without limitation, for relief for damages or penalties for delay assessed by

the City; (b) payment by the City of money or damages arising from work done by, or on behalf of, Contractor pursuant to the Contract Documents and payment for which is not otherwise expressly provided or to which Contractor is not otherwise entitled; and (c) payment of an amount that is disputed by the City.

1-1.15 **CONSTRUCTION SCHEDULE.** A list or graphic display of construction activities required for completing the Work, in a format required by the Contract Documents. The duration, start and finish date, and sequence of significant activities, critical path, float and milestones must be indicated in the Construction Schedule.

1-1.16 **CONTRACT OR AGREEMENT.** The written agreement relating to the Work to be performed, the labor, materials, and equipment to be furnished, and the payment to be made therefor. The Agreement/Contract is part of and incorporates all of the Contract Documents.

1-1.17 **CONTRACT CONDITIONS.** Includes the General Conditions, Supplemental Conditions, and Specifications.

1-1.18 **CONTRACT DOCUMENTS.** Includes those documents that form the basis of the Contract, including but not limited to, Bidding Documents, the Bid or Proposal, Contract Bonds, the Contract, all required insurance certificates or endorsements, all bonds, all required certifications or statements, Change Orders, any Contract Amendment, any City Standard which is incorporated by reference and these City of Roseville General Conditions for Buildings and Grounds.

1-1.19 **CONTRACT DRAWINGS.** The official drawings including plans, elevations, sections, detail drawings, diagrams, plated, General Notes, information and schedules thereon, or exact reproductions thereof, showing the location, character, dimension, and details

of the Work. The Contract Drawings include any drawings or plates bound within the Supplemental Conditions.

1-1.20 **CONTRACT PRICE.** The total compensation to be paid to the Contractor in accordance with the terms of the Agreement.

1-1.21 **CONTRACT TIME.** The number of Days, or portion thereof, allowed for completion of the Work, including all authorized time extensions. The effective date for commencement of the Work specified in the Notice to Proceed shall define the beginning of the Contract Time.

1-1.22 **CONTRACTOR.** Individual, firm, partnership, limited liability company, corporation, joint venture, or any combination thereof, who has entered into the Agreement with City.

1-1.23 **DAY OR DAYS.** Unless otherwise designated, Day or Days as used in the Contract Documents will be understood to mean calendar Day or Days.

1-1.24 **DEPARTMENT.** The Department for Contract Administration, as identified in the Supplemental Conditions.

1-1.25 **DIRECT COSTS.** Those cost items (including labor, materials, equipment and any subcontractor's work) that are used in the actual performance of, and are specifically and uniquely attributable to the Work or changed Work. Direct Costs do not include Overhead. Direct Costs only include the following:

A. Payroll costs for employees in the direct employ of Contractor in the performance of the Work under schedules of job classifications agreed upon by City and Contractor. Payroll costs for employees not employed full time on the Work shall be apportioned on the basis of their time spent on the Work. Payroll costs shall include salaries and

wages plus the cost of fringe benefits which shall include social security contributions, unemployment, excise and payroll taxes, workers' compensation, health and retirement benefits, sick leave, vacation and holiday pay applicable thereto. Such employees may include superintendents and foremen at the site. The expenses of performing work after regular working hours, on Saturday, Sunday or legal holidays shall be included in the above only to the extent authorized by City in writing.

B. Cost of all materials and equipment furnished and incorporated in the Work, including costs of transportation and storage thereof, and suppliers' field services required in connection therewith. All trade discounts, rebates and refunds and all returns from sale of surplus materials and equipment shall accrue to City, and Contractor shall make provisions so that they may be obtained.

C. Payments made by Contractor to the subcontractors for work performed by subcontractors. If required by City, Contractor shall obtain competitive bids from subcontractors acceptable to Contractor and shall deliver such bids to City who will then determine which bids will be accepted. If a subcontract provides that the subcontractor is to be paid on the basis of cost of the work plus a fee, the subcontractor's cost of the work shall be determined in the same manner as Contractor's cost of the work. All subcontracts shall be subject to the other provisions of the Contract Documents insofar as applicable.

D. Costs of special consultants (including engineers, architects, testing laboratories, surveyors, and accountants) employed for services specifically, and only, related to the Work.

E. Supplemental costs including the following:

1. The proportion of necessary transportation, travel and subsistence

expenses of Contractor's employees incurred in discharge of duties connected with the Work.

2. Cost, including transportation and maintenance, of all materials, supplies, equipment, machinery, appliances, office and temporary facilities at the site and hand tools not owned by the workers, which are consumed in the performance of the Work, and cost, less market value of such items used but not consumed which remain the property of Contractor.

3. Rentals of all construction equipment and machinery and the parts thereof whether rented from Contractor or others in accordance with rental agreements approved by City, and the costs of transportation, loading, unloading, installation, dismantling and removal thereof, all in accordance with terms of said rental agreements. The rental of any such equipment, machinery or parts shall cease when the use thereof is no longer necessary for the Work.

4. Sales, consumer, use or similar taxes related to the Work, and for which Contractor is liable, imposed by laws and regulations.

5. The cost of utilities (including the meter and all associated installation costs), fuel and sanitary facilities at the site.

6. Cost of premiums for additional bonds and insurance required because of changes in the Work.

1-1-26 **DIRECTOR.** Director of the Department for Contract Administration or his or her designee.

1-1.27 **EMERGENCY.** Any sudden generally unforeseen occurrence (such as a fire, flood, storm, earthquake, civil disorder, or other natural and/or man-made disaster) that has the potential to adversely affect the safety of life, the Work, and/or adjacent property; to interrupt contracts essential to the performance of the Work; and/or to cause catastrophic failure of City

equipment and/or facilities.

1-1.28 **ENGINEER OR ARCHITECT.** Professional Engineer or Architect designated for a particular project responsible for signing and sealing the permit drawings, interpretation of the drawings where ambiguities exist, review of requests for information, design Change requests and Shop Drawings, resolution of errors and omissions, and finalization of Record Documents.

1-1.29 **FINAL COMPLETION.** When the project has been completed according to the terms and conditions set forth in the Contract Documents. Final Completion is not the same as Acceptance.

1-1.30 **FORCE ACCOUNT.** Payment by force account shall mean payment on the basis of the Contractor's time and materials.

1-1.31 **GENERAL NOTES.** The written instructions, provisions, conditions or other requirements appearing on the Contract Drawings and so identified thereon, which pertain to the performance of the Work.

1-1.32 **INSTALLATION, INSTALL.** Completely assembling, erecting, and/or connecting materials, parts, components, supplies, and related equipment specified or required for the completion of the Work.

1-1.33 **LABORATORY.** Established professional laboratories authorized by the City to test materials and Work involved in the Contract.

1-1.34 **LEGAL HOLIDAYS.** Those days designated as Federal holidays or declared by the City, or otherwise specified in the Contract Documents.

1-1.35 **LIQUIDATED DAMAGES.** The amount prescribed in the Contract Documents to be paid to the City or to be deducted from any payments due or to become due the

Contractor for each day's delay in completing the whole or any specified portion of the Work beyond the time allowed in the Supplemental Conditions.

1-1.36 **NOTICE OF COMPLETION.** A legal notice filed by the City with the Placer County Recorder's Office stating that construction has been completed and accepted by the City.

1-1.37 **NOTICE TO PROCEED.** A written notice given by the City to the Contractor fixing the date on which the Contract Time will commence to run.

1-1.38 **NOTICE OF TERMINATION.** Written notice from the City to the Contractor and/or its Surety terminating the Agreement, or a portion thereof, either for convenience of the City or for default due to the Contractor's failure to perform its contractual obligations.

1-1.39 **OVERHEAD.** Business or administrative expenses (including but not limited to office expenses, administrative staff, rent, insurance, utilities) not chargeable to a particular part of the Work. The term "Overhead" shall include all of the following:

A. Payroll costs and other compensation of Contractor's officers, executives, principals (of partnerships and sole proprietorships), general managers, engineers, architects, estimators, attorneys, auditors, accountants, purchasing and contracting agents, expediters, timekeepers, clerks, and other personnel employed by Contractor whether at the Work Site or in Contractor's principal or a branch office for general administration of the Work and not specifically included in the agreed upon schedule of job classifications, all of which are to be considered administrative costs covered by the Contractor's fee.

B. Expenses of Contractor's principal and branch offices other than Contractor's office at the site.

C. Any part of Contractor's capital expenses, including interest on Contractor's capital employed for the Work and charges against Contractor for delinquent payments.

D. Cost of premiums for all bonds and for all insurance whether or not Contractor is required by the Contract Documents to purchase and maintain the same, except as provided in section 1-1.25.

E. Other overhead or general expense costs of any kind.

1-1.40 **PREMISES.** Shall mean the area within construction easements, easements, rights of entry and City owned property which surrounds the Work Site, limited by the property lines thereof. In some cases Premises may coincide with the Work Site.

1-1.41 **PROFESSIONAL ENGINEER.** An engineer licensed by the Board of Registration for Professional Engineers, State of California.

1-1.42 **PROJECT MANUAL.** A book containing all Contract Documents.

1-1.43 **PROPOSAL FORMS.** The approved forms upon which the City requires that each Bidder submit its bid with regard to the Agreement.

1-1.44 **REQUEST FOR INFORMATION (RFI).** A document issued by the Contractor requesting information concerning the Contract Documents.

1-1.45 **SAFETY.** Includes the practice of identifying potential hazards, assessing their risk, taking corrective action where possible, including and providing control measures such as engineering design, written procedures, and the personal protective equipment for workers in order to eliminate or reduce the risk for exposure in the workplace.

1-1.46 **SCHEDULE OF VALUES.** The breakdown of the Contract Price that will serve as the basis for Contractor's Applications of Payment. Any lump sum bid item

included within the Contract Price will be apportioned among values relating to specific components of the Work covered by said lump sum.

1-1.47 **SHOP DRAWINGS.** Drawings, plans, diagrams, schedules, and other data specifically prepared and submitted to the City by the Contractor, showing in detail: (a) the proposed fabrication and assembly of a special component of the Work; and (b) the Installation (form, fit and attachment details) of a special component of the Work. Shop Drawings shall be deemed to include Working Drawings, Product Data, literature, and applicable performance and test data.

1-1.48 **SPECIFICATIONS.** The technical Specifications for the Work prepared by the Director or an Engineer or Architect describing in detail the nature of the Work, its components, any performance standards, and how the Work is to be constructed.

1-1.49 **SUBCONTRACTOR.** Any individual, firm, partnership, limited liability company, corporation, joint venture, or combination thereof, other than employees of the Contractor, engaged by the Contractor to furnish services, labor, equipment and materials for a portion of the Work.

1-1.50 **SUBMITTALS.** Those documents required to be submitted by the Contractor for review by the City in accordance with the Contract Documents.

1-1.51 **SUPPLEMENTAL CONDITIONS.** The Supplemental Conditions are specific clauses modifying or supplementing these General Conditions.

1-1.52 **SUPPLIER.** Any individual, firm, partnership, limited liability company, corporation, joint venture, or combination thereof, other than employees of the Contractor, that supplies a tangible product as a portion of the Work, with services usually limited to delivery and/or required testing, and with manufacturing, fabrication, or production facilities located off

the Work Site.

1-1.53 **WORK.** The furnishing of all labor, and the furnishing and Installing of all materials, articles, supplies and equipment as specified, designated, or required by the Contract Documents.

1-1.54 **WORK SITE.** All or portion of the Premises that the Work is limited to as shown on the Contract Drawings or designated by the Director. Public streets are not included unless Work is being done within the street right-of-way.

1-1.55 **WORKING DRAWINGS.** Original drawings prepared by the Contractor and/or its Subcontractors or Suppliers, of any tier, illustrating Work required for construction that will not become an integral part of the completed Work. This includes, but is not limited to, drawings for temporary structures such as decking, bulkheads, excavation supports, utility support, groundwater control, forming, falsework, access roads, staging areas, staging plans, and diversion plans. A Working Drawing is one type of a Shop Drawing.

XII. SECTION 2

CONTROL AND SCOPE OF THE WORK

2-1.01 **AUTHORITY OF DIRECTOR.** The Contract shall be performed in a manner satisfactory to the Director who shall decide all questions which may arise as to the quality or acceptability of materials furnished and Work performed and as to the manner of performance and rate of progress of the Work; all questions which may arise as to the interpretation of the Contract Documents; all questions as to the acceptable fulfillment of the Contract on the part of the Contractor; and all questions as to compensation. The Director shall have authority to enforce and make effective such decisions and orders in the event the Contractor fails to promptly carry out the same.

2-1.02 **INTENT OF CONTRACT DOCUMENTS.** The Contract Documents are complementary, and what is called for by one shall be as binding as if called for by all. The intent of the Contract Documents is to describe the details for the construction and completion of the Work. Where the Contract Documents describe portions of the Work in general terms, but not in complete detail, it is understood that only the best general practice shall be followed and that only materials and workmanship of the best quality are to be used. Any Work, materials, or equipment that are customarily provided, or that are reasonably inferable from the Contract Documents as being required to produce the intended result, shall be supplied, whether or not specifically called for. When words, which have a well-known technical or trade meaning are used to describe work, materials, or equipment, such words shall be interpreted in accordance with that meaning. Unless otherwise specified, the Contractor shall furnish all labor, materials, tools, equipment, and incidentals, and do all the Work involved in executing the Contract in a

satisfactory and workmanlike manner.

Reference to standard specifications, manuals or codes of any technical society, organization or association, or to the laws or regulations of any governmental authority, whether such reference be specific or by implication, shall mean the latest standard specification, manual, code, laws, or regulations in effect on the first published date of the Notice to Contractors, except as may be otherwise specifically stated. However, no provision of any referenced standard specification, manual or code (whether or not specifically incorporated by reference in the Contract Documents) shall be effective to change the duties and responsibilities of City or Contractor, or any of their consultants, agents, or employees from those set forth in the Contract Documents, nor shall it be effective to assign to City, or City's designated representative, any duty or authority to supervise or direct the furnishing or performance of the Work or any duty or authority to undertake responsibility contrary to other provisions of the Contract Documents.

The Contract Documents are divided into parts, divisions, sections and articles for convenience, organization and reference. Generally, there has been no attempt to divide the Specifications sections into work performed by the various building trades, work by separate Subcontractors, or work required for separate facilities in the project.

2-1.03 **EXAMINATION AND VERIFICATION OF CONTRACT DOCUMENTS.** The Contractor shall thoroughly examine and become familiar with all of the various parts of the Contract Documents and shall determine the nature and location of the Work, the general and local conditions (including applicable laws) and all other matters which can in any way affect the cost, progress or performance of the Work under this Agreement. Failure to make an examination necessary for this determination shall not release the Contractor from the obligations of the Agreement. No oral agreement or conversation with any officer, or employee

of the City, or with the City's designated representative either before or after the execution of the Agreement, shall affect or modify any of the terms or obligations contained in the Contract Documents.

2-1.04 **CONTRACT DRAWINGS.** The Contract Drawings consist of general drawings and show such plans, elevations, sections, details and schedules as are necessary to give a graphic and pictorial description of the contemplated construction. All authorized alterations affecting the requirements and information given on the Contract Drawings shall be in writing.

2-1.05 **COORDINATION AND INTERPRETATION OF CONTRACT DOCUMENTS.** All Contract Documents are essential parts of the Contract, and a requirement occurring in one is as binding as though occurring in all. They are intended to be complementary, and to describe and provide for a complete Work.

In the event of inconsistencies between requirements contained in different components of the Contract Documents, the precedence of the Contract Documents shall be as follows to resolve conflicts:

1. Change Orders
2. The Contract (including Addenda)
3. The Supplemental Conditions
4. Specifications
5. Contract Drawings
6. The General Conditions

Should it appear that the Work to be done or any of the matters relative thereto are not sufficiently detailed or explained in the Contract Documents, the Contractor shall submit a

Request for Information ("RFI") to the Director for such further explanations as may be necessary and shall conform to the written explanation given as if part of the Contract Documents. The decisions of the Director shall be final.

Contractor shall anticipate that it will be necessary to prepare and submit RFIs regarding the Contract Documents. The City will respond to each RFI by no later than fourteen (14) Days after receipt of the RFI, unless the RFI is of significant complexity. Furthermore, in the event that there are numerous RFIs pending, Contractor shall cooperate with the City in establishing a priority for responding to the RFIs, and potentially some RFIs may be responded to beyond the fourteen (14) Day period.

Each RFI prepared by Contractor shall be full and complete. Contractor shall prepare RFIs so as to not cause any delay to the progress of the Work and to not cause any impact to Contractor's labor productivity in the field. Contractor shall not assert any Claims for delay or interference against the City if Contractor fails to timely submit any RFI to the City, after consideration of the response period allowed for by the City.

The response to an RFI shall not, by itself, constitute a writing that authorizes Contractor to perform any Work that causes an adjustment to either the Contract Price or the Contract Time. If Contractor believes that any response to any RFI should constitute a compensable change, Contractor shall provide a Notice of Potential Claim as provided in Section 7-1.03, below. Contractor's failure to provide the required written notice shall constitute a waiver of the Contractor's right to seek a compensable change based on the RFI response.

The Contractor shall examine all Contract Documents; shall verify all figures in the Contract Documents before laying out the Work; shall promptly notify the City of all errors, inconsistencies, and/or omissions that it discovers; and, in instances where such non-

conformities are discovered, shall obtain specific instructions in writing from the City before proceeding with the Work. Contractor's performance of any Work affected by such non-conformities prior to the City's decision shall be at the Contractor's risk. Any Work that is customarily provided or that is reasonably inferable shall not relieve the Contractor from performing such work at no additional expense and/or delay, and such Work shall be performed as if fully set forth in the Contract Documents.

2-1.06 **INDEPENDENT CONTRACTOR STATUS.** The Contractor shall independently perform all Work required by the Contract Documents and shall not be considered as an agent or employee of the City, nor shall the Contractor's Subcontractors or employees be considered as subagents of the City.

The Contractor and Contractor's Subcontractors shall be licensed in accordance with the laws of the State of California and as more particularly described in the bidding documents or elsewhere in the Contract Documents.

2-1.07 **ORDER OF WORK.** When required by the Contract Documents, the Contractor shall follow the sequence of operations set forth therein. Full compensation for conforming to such requirements will be considered as included in the prices paid for the various Contract items of work, and no additional compensation will be allowed therefor.

2-1.08 **SUBMITTALS.** It shall be the Contractor's responsibility to timely submit, so as to cause no delay in the Work, all Shop Drawings, descriptive data, manuals, instructions, affidavits, samples for the various trades as required by the Supplemental Conditions and Specifications, and offers of alternatives, if any. Such Submittals shall be checked and coordinated by the Contractor with the Work of other trades involved before they are submitted to the Director for examination.

The Contractor shall deliver at least one (1) electronic copy of the Submittals to the Director, and one (1) hard copy if requested. Work requiring the submittal of working drawings, descriptive data or samples shall not begin prior to approval of said Submittal by the Director.

The time allowed for review of each Submittal will be as indicated in the Supplemental Conditions. Review time will start upon receipt of the Submittal by the Director and will end upon the Director's mailing of the Submittals to the Contractor. Defective, incomplete or partial Submittals will be returned to the Contractor unreviewed.

Submittals shall be made by a letter of transmittal that shall contain a list of all matter submitted and identification of all variations from the Contract Documents contained in the Submittal. The letter and all items accompanying the same shall be fully identified as to project name and location, Contractor's name, district, county, and Contract number, with ample cross-references to the Contract Documents, to facilitate identification of items and their location in the Work.

All Shop Drawings and supporting data, catalogs, schedules, shall be submitted as the instruments of the Contractor, who shall be responsible for their accuracy and completeness. These Submittals may be prepared by the Contractor, Subcontractors, or Suppliers, but the Contractor shall ascertain that Submittals meet all of the requirements of the Contract Documents, while conforming to structural, space, and access conditions at the point of Installation. The Contractor shall check all Submittals before submitting them to the Director.

2-1.08A **SHOP DRAWINGS.** The Contractor shall submit an electronic copy (searchable PDF) of all Shop Drawings required by the Supplemental Conditions or Specifications, and one (1) hard copy, if requested by the Director. Shop Drawings shall also be provided separately in AutoCAD format using the latest version of AutoCAD. An electronic

copy will be returned to the Contractor either approved for use, as demonstrated by a stamp, or returned for correction and resubmittal. Materials, colors and/or samples will not be returned to the Contractor. Shop Drawings include any drawing, which requires execution by a draftsman as distinguished from printed matter. The size of Shop Drawings shall not exceed twenty-four inches (24") by thirty-six inches (36").

2-1.08B **DESCRIPTIVE DATA.** The Contractor shall submit an electronic copy (searchable PDF) of each set of manufacturer's brochures or other data required by the Supplemental Conditions or Specifications, and one (1) hard copy, if requested by the Director. The City will examine such Submittals and return either an electronic copy or a hard copy approved for use or returned for correction and resubmittal.

2-1.08C **SAMPLES.** The Contractor shall submit samples of articles, materials or equipment as required by the Supplemental Conditions or Specifications. The Work shall be in accordance with the approved samples. Samples shall be removed from City property when directed or may be incorporated in the Work if approved by the Director. Samples not removed by the Contractor will become the property of the City or, at the City's option, will be removed or disposed of by the City at the Contractor's expense.

XIII. 2-1.08D **MANUALS, INSTRUCTIONS AND AFFIDAVIT.**

A. Manuals and Instructions. Where operation and maintenance manuals are required by the Supplemental Conditions, the Contractor shall submit two (2) sets of manuals, suitably bound, along with two (2) electronic copies in an approved format, to the Director within forty-five (45) Days after favorable review of the equipment or facilities. If operation and maintenance manuals are approved to be provided in PDF format, text shall be provided in searchable PDF format, making proper use of PDF for headings and heading levels,

paragraphs, tables, and lists. Submitted operation and maintenance manuals shall be a collected, organized, and indexed set of bookmarked PDF documents comprising each operation and maintenance manual that corresponds to a hardcopy binder. All manuals shall be marked to indicate the specific equipment furnished for this project and shall include at a minimum:

1. Equipment summary form
2. Cover/Title page
3. Table of contents
4. Operating procedures including start-up, shutdown, normal operation, all operating modes, emergency shutdown, and safety precautions
5. Lubrication instructions (if required)
6. Preventative maintenance procedures
7. Troubleshooting and corrective maintenance procedures
8. Reinstallation instructions
9. Overhaul instructions (if applicable)
10. Parts identification list with exploded view and associated cross references
11. Recommended spare parts list
12. Operator safety requirements
13. Electrical and control system wiring drawings, including panel wiring control (ladder) diagrams, logic diagrams, loop diagrams, and interconnection diagrams
14. Panel layout and assembly drawings

15. Mechanical drawings

16. Printouts of all software programs and configuration files

17. Factory and field test procedures and results

Operation and maintenance manuals for complex equipment shall also include:

18. Alternate specified operating modes

19. Emergency shutdown instructions

20. Normal shutdown instructions

21. Long term shutdown instructions

Operation and maintenance manuals for systems comprised of separate pieces of equipment shall include a system explanation of items 4, 7, 18, 19, 20, and 21 as well as the instructions for the separate pieces of equipment.

B. Affidavits. Where required in the Supplemental Conditions or Specifications, manufacturers of equipment shall provide field service as a part of this project. Equipment shall not be considered ready for full time operation until after the authorized factory-trained and qualified manufacturer's representative for the specific equipment has checked and adjusted the equipment and certified by written affidavit that the equipment has been properly Installed, tested, adjusted, lubricated, and calibrated, and is ready for full time operation. Acceptable affidavits shall be submitted prior to completion of the Work. Affidavits shall contain the following specific wording:

"The (Name of Equipment) has been properly installed, tested, adjusted, lubricated, and calibrated, and is ready for full time operation. The installation has been inspected and has been found to be in conformance with our (the manufacturer's) standards and requirements."

No amplification, dilution, or modification of this specific wording will be permitted.

2-1.08E **ALTERNATIVES.** For convenience in designation in the Contract Documents, certain materials, articles, or equipment may be designated by a brand or a trade name or the name of the manufacturer together with catalog designation or other identifying information, hereinafter referred to generically as "designated by brand name." Except in those instances where the product is designated to match others in use in a particular improvement, either completed or in the course of completion, an alternative material, article, or equipment which is of equal quality and of the required characteristics for the purpose intended may be proposed for use provided the Contractor complies with the following requirements:

A. The Contractor shall submit its proposal for an alternative in writing. Such request shall be made in ample time to permit review and approval without delaying the Work. The Contractor shall not be entitled to an adjustment of the Contract Time or an increase in the Contract Price based on any Contractor-proposed substitution.

B. No such proposal will be considered unless accompanied by complete information and descriptive data, necessary to determine the equality of the offered materials. The Contractor shall satisfy the Director as to the comparative quality, suitability, or performance of the offered material, articles, or equipment. In the event that the Director rejects the use of such alternative materials, articles, or equipment, then one of the particular products designated by brand name shall be furnished.

C. The burden of proof as to the quality and suitability of alternatives shall be upon the Contractor and it shall furnish all information necessary as required by the Director. The Director shall be the sole judge as to the quality and suitability of alternative articles or materials and such decisions shall be final. Where use of an alternative material

involves redesign of, or changes to, other parts of the Work, the cost and time required to effect such redesign or changes will be considered in evaluating the suitability of the alternative material. Cost of redesign by the City will be borne by the Contractor.

D. Whenever classification, rating or other certification by a body such as Underwriters Laboratories (UL) or the National Electrical Manufacturers Association (NEMA) is a part of the specification for any material, Contractor's request for use of alternative articles or materials shall be accompanied by reports from the listed or equivalent independent testing Laboratory indicating compliance with the Contract Documents. The cost of all testing required to prove equality of the material proposed shall be borne by the Contractor. Approval of an alternative shall be only for the characteristics or use named in such approval, and shall not be used to change or modify any requirement of the Contract Documents.

E. At its election, the City reserves the right to consider any Contractor proposed substitution as a Cost Reduction Proposal under Section 3-1.07 of these General Conditions in the event that there is a significant savings resulting from the substitution.

The Director will examine, with reasonable promptness, such Submittals, and return of Submittals to the Contractor shall not relieve the Contractor from responsibility for deviations and alternatives from the Contract Documents, nor shall it relieve the Contractor from responsibility for errors in the Submittals. A failure by the Contractor to identify in its letter of transmittal material deviations from the Contract Documents shall void the Submittal and any action taken thereon by the Director. When specifically requested by the Director, the Contractor shall resubmit such Shop Drawings, descriptive data and samples as may be required.

If any mechanical, electrical, structural, or other changes are required for the proper Installation and fit of alternative materials, articles, or equipment, or because of deviations from

the Contract, such changes shall not be made without the approval of the Director and shall be made without additional cost to the City.

2-1.09 **DISPOSAL OF MATERIAL OUTSIDE THE WORK SITE.** Unless otherwise stated elsewhere in the Contract Documents, the Contractor shall, at its own cost and expense, make its own arrangements for disposing of materials outside the Work Site.

Except when material is to be disposed of at a landfill or recycling center, when any material is to be disposed of outside the Work Site, the Contractor shall first obtain written permission from the City to dispose of the material at the intended location. The City's approval will be contingent upon the Contractor obtaining a written permit from the property owner on whose property the disposal is to be made. Prior to the disposal of any material at the intended location, the Contractor shall submit such permit or a certified copy thereof to the City, together with a written release from the property owner absolving the City from any and all responsibility related to the disposal of material on said property.

Disposal of Hazardous Materials must be done in accordance with all laws and regulations. Copies of all required regulatory documentation including copies of final manifests shall be supplied to the City.

2-1.10 **ACCESS TO THE WORK.** The Contractor shall satisfy itself that the jurisdictions through which its operations and haul routes pass will permit such operations with respect to the type of vehicle, laden weights, frequency and dimensions of loads, hours of operation and required traffic control. All necessary permits, licenses or bonds shall be obtained and paid for by the Contractor.

2-1.11 **TEMPORARY UTILITIES.** The Contractor shall make its own arrangements with utility companies for any temporary services it may require in performance of

the Work and shall pay all costs of these services directly to these utility organizations.

2-1.12 **UTILITY FACILITIES.** The Contractor shall protect from damage those utility facilities that are to remain in place, be Installed, relocated or otherwise arranged.

The Contractor's attention is directed to the possible existence of facilities not shown, and of facilities in a location different from that, which is indicated. The Contractor shall take steps to ascertain the exact location of all facilities prior to doing any Work, which may damage such facilities or interfere with their service. Where the location of a facility is indicated or inferred from the presence of visible facilities such as buildings, meters, and junction boxes, the Contractor shall make such excavations and explorations as are necessary to ascertain the correct location. Unless provided for elsewhere in the Contract Documents, the cost of such excavations and explorations will be considered as a part of the cost of other items of Work and no additional payment will be made. Such excavations and exploratory Work shall not entitle the Contractor to an extension of time.

If the Contractor discovers underground facilities not indicated or inferred from the Contract Documents, the Contractor shall immediately give the Director written notification of the existence of those facilities. The Contractor shall determine the exact location of the underground facilities and the cost of the work will be paid for in accordance with the Contract Documents. The underground facilities shall be protected from damage as directed by the Director and the cost of that work will be paid for as extra work. The Contractor shall, if directed by the Director, repair any damage, which may occur to the underground facilities. The cost of that repair work, not due to the failure of the Contractor to exercise reasonable care, will be paid for as extra work. Damage due to the Contractor's failure to exercise reasonable care shall be repaired at the Contractor's cost and expense.

Where it is determined by the City that the rearrangement of an underground facility, the existence of which is not shown on the Contract Drawings, is essential in order to accommodate the Work, the City will provide for the rearrangement of such facility by other forces or, when so ordered by Change Order, such rearrangement shall be performed by the Contractor and will be paid for as provided under a Change Order.

The Contractor shall be responsible for the maintenance of all utility facilities placed by the Contractor in temporary locations, and all utilities within the construction area not required to be relocated but which are required to be shored or supported during the construction period. The cost of such maintenance shall be borne by the Contractor, and no other compensation shall be due the Contractor for this Work.

The cost of providing and maintaining all necessary or required temporary structures, of making any necessary repairs, replacements, or similar operations, or furnishing indemnity or other bonds, if required, and all costs required by this Section shall be paid by the Contractor and shall be included in the prices bid in the schedule for other items of work.

2-1.13 **PRESERVATION AND CLEANING.** The Contractor shall clean up the Work at frequent intervals and at other times when directed by the Director. While finish Work is being accomplished, floors, Work areas and finished areas shall be kept clean, free of dust, construction debris and trash. Upon completion of the Work, the Contractor shall remove from the Premises its construction equipment and any waste materials not previously disposed of, leaving the Premises thoroughly clean and ready for final inspection.

2-1.14 **LIMITATIONS ON WORK SITE AND PREMISES.** The Contractor shall limit its construction operations to the Work Site unless otherwise shown on the Contract Drawings or specified. The Contractor shall perform no operation of any nature over or on the

Premises except such operations as are authorized by the Contract Documents or as authorized by the Director.

2-1.15 **DUST CONTROL.** During the performance of all Work under this Contract, the Contractor shall assume all responsibility for dust control and shall furnish all labor, equipment, and means required to carry out proper and efficient measures wherever and whenever dust control is necessary to prevent the operations from producing dust damage and nuisance to persons and property. Any claims resulting from dust damage or nuisance shall be borne solely by the Contractor. The Contractor shall comply with all applicable Air Quality Act requirements.

2-1.16 **SANITATION.** The Contractor shall provide sanitary facilities for all persons working on the Work.

2-1.17 **NIGHT WORK AND NORMAL WORKING HOURS.** Normal working hours at the construction site shall be between the hours of 7:00 a.m. and 7:00 p.m. Monday through Friday. Legal holidays are excluded. Certain utility connections and street operations are anticipated to require night Work by the Contractor during low usage periods. The Contractor may also be required to prosecute the Work at night if, at any time, the Director shall deem it necessary for the progress of the Work, or if emergencies arise. The Contractor shall promptly comply with any such requirements made in writing by the Director. The Contractor will also be permitted to Work at night if Contractor satisfies the Director of the need therefor, in order to maintain the required progress or protect the Work from the elements. Certain activities are required to be performed at night for nominal progress of the Work and/or are specified to be performed at night by other portions of the Supplemental Conditions. When required, ordered, or permitted to Work at night, the Contractor shall provide sufficient and

satisfactory lighting and other facilities therefor. The Contractor shall receive no extra payment for night Work, if specified or if required to be performed during the normal progress of the Work, but compensation shall be considered as having been included in the price stipulated for the Work.

If Contractor performs work during weekends, holidays or any non-normal work hours, Contractor shall pay for required City Inspectors.

2-1.18 **LINES AND GRADES.** Unless otherwise provided in the Supplemental Conditions, the Contractor shall lay out all Work, including structures and pipelines, and shall be responsible for any errors resulting therefrom. In all questions arising as to proper location of lines and grades, the Director's decision will be final.

As part of the bid price for the construction of the improvements, the Contractor shall provide and be responsible for the layout of all Work on this project. The Contractor shall provide all necessary surveys, field staking, and positioning for the construction of all components at the proper alignment, elevations, grades, and positions, as indicated on the Contract Drawings and as required for the proper operation and function. The Contractor shall stake its Work area limits. Contractor shall perform all construction staking using a land surveyor licensed in the State of California. Contractor shall provide a staking plan prior to commencement of Work for the City's review and maintain monuments, stakes, and marks, and shall update the plan as necessary. Director, or Director's designated representative, may verify the field condition. Errors or inconsistencies in the Contract Documents discovered by the Contractor shall be reported to the Director within twenty-four (24) hours and prior to constructive forms or related improvements. Any work Installed with this requirement shall be subject to removal and replacement at the Contractor's expense.

The Contractor's lay-out shall be based on existing structures, property lines, survey control, and bench marks established by the City. All structures and pipeline connections shall be Installed based on actual elevation of existing structures to which connections are made.

The Contractor shall supply such labor as required, at no extra charge, to aid and assist the Director in checking location and grades of the Work as set by the Contractor if the Director desires to perform this checking. This shall include moving materials and equipment located between monuments and the construction Work.

2-1.19 **ARCHEOLOGICAL DISCOVERIES.** Upon discovery of prehistoric or historic artifacts, or other indicators or examples of cultural resources discovered during the course of site preparation, grading, excavation, construction or other development activities, all operations within fifty feet (50') of the find shall cease until such time as the City provides the services of a qualified archeologist to evaluate the finds and recommend appropriate action.

Prehistoric materials can include flaked stone tools (e.g., projectile points, knives and choppers) or tool making debris of obsidian, chert, quartzite and other materials, culturally darkened soil (i.e., midden, which often contains heat affected rock, ash and charcoal, shellfish remains, and cultural materials), and stone milling equipment such as mortars, pestles and hand stones. Historic material may include wood, stone, concrete or adobe footings, walls and other structural remains; debris filled wells or privies; and deposits of wood, metal, glass, ceramics and other refuse.

2-1.20 **PRESERVATION OF MONUMENTS.** Any monuments or bench marks disturbed by construction operations shall be repaired per the City's standard and promptly re-established by a registered land surveyor or civil engineer. A plat for each monument shall be furnished to the Director after the plat has been recorded with the Placer

County Recorder's Office at no additional cost to the City. The recorded plat shall serve as a record of the re-establishment of said existing survey points.

2-1.21 **CONFORMITY WITH CONTRACT DOCUMENTS.** Work and materials shall conform to the lines, grades, cross sections, dimensions and material requirements, including tolerances, required by the Contract Documents. Although measurement, sampling and testing may be considered evidence as to such conformity, the City shall be the sole judge as to whether the Work or materials deviate from the Contract Documents. At its option, the City may elect to accept deviations from the Contract Documents with appropriate backcharge Assessments against the Contractor, and, if such an election is made, the City will provide written notice to the Contractor of such acceptance.

2-1.22 **FINAL CLEANUP.** Prior to final Acceptance of the Work, the Contractor shall thoroughly clean the Premises, remove all temporary structures built by or for the Contractor, and remove all equipment and surplus construction material and debris from the area. The entire project, before Acceptance by the City, shall be left in a neat and clean condition. All Work areas and temporary construction areas shall be returned to essentially the same conditions existing before the commencing of project construction.

2-1.23 **AS-BUILT DOCUMENTS AND DRAWINGS.** The Contractor shall maintain one set of the full size prints furnished by the City and mark thereon in color any deviations from plan dimensions, elevations, or orientations. Also, the Contractor shall locate on said prints, all underground facilities, such as piping, conduits and tanks by accurate field measurement from structure walls, corners, etc. The Contractor shall submit the prints and an electronic CD (searchable PDF or source file format such as AutoCAD) in good condition to the Director upon completion of the job as a condition of Acceptance of the project. Marked prints

shall be updated at least once each week and shall be available to the Director for review as to currency prior to developing partial payment estimates. After the completion of testing, but prior to Acceptance, the Contractor shall submit As-Built electrical drawings in color and an electronic CD showing all components and their wiring, and as specified in the Supplemental Conditions.

2-1.24 **SUPERINTENDENCE.** The Contractor shall supervise and direct the Work, which shall be performed in accordance with the requirements of the Contract Documents. The Contractor shall be solely responsible for implementation of all construction means, methods, techniques, sequences, and procedures and for coordination of all portions of the Work under the Agreement. The Contractor shall be solely responsible for the safety of its employees, Subcontractors of any tier, Suppliers, visitors to the Contractor, and other third parties associated with the Contractor.

The Contractor shall designate in writing before starting Work, an authorized representative who shall have the authority to represent and act for the Contractor.

When the Contractor is comprised of two (2) or more persons, firms, partnerships, or corporations functioning on a joint venture basis, said Contractor shall designate in writing before starting Work, the name of one authorized representative who shall have the authority to represent and act for the Contractor. Instances of misconduct, contract non-compliance, unsatisfactory performance, or incompetence by these personnel shall be grounds for the City to direct Contractor to dismiss them from the Project. Contractor shall immediately comply with the City's request for dismissal, at no cost to the City, and shall designate a replacement, which shall be subject to approval by the City.

Said authorized representative shall be present at the site of the Work at all times while Work is actually in progress on the Contract. When Work is not in progress and during periods

when Work is suspended, arrangements acceptable to the Director shall be made for any Emergency Work that may be required.

Whenever the Contractor or its authorized representative is not present on any particular part of the Work where it may be desired to give direction, orders will be given by the Director, which shall be received and obeyed by the superintendent or foremen who may have charge of the particular Work in reference to which the orders are given.

Any order given by the Director, not otherwise required by the Supplemental Conditions to be in writing, will on request of the Contractor, be given or confirmed by the Director in writing.

2-1.25 **CHARACTER OF WORKER.** If any Subcontractor or person employed by the Contractor shall appear to the Director to be incompetent or to act in a disorderly or improper manner, he or she shall be removed immediately on the requisition of the Director, and such person shall not again be employed on the Work.

2-1.26 **INSPECTION.** The Contractor shall at all times permit the Director to inspect the Work or any part thereof. The Contractor shall maintain proper facilities and provide safe access for such inspection by the Director to all parts of the Work, and to the shops where the Work is in preparation. Work shall not be covered up until authorized by the Director and the Contractor shall be solely responsible for notifying the Director where and when such Work is in readiness for inspection and testing. Should any such Work be covered without authorization, it shall, if so ordered, be uncovered at the Contractor's expense.

Unless otherwise designated as normal working hours, whenever the Contractor intends to perform Work on Saturday, Sunday, or a Legal Holiday, the Contractor shall give notice to the Director of such intention forty-eight (48) hours prior to performing such Work, or such longer

period as may be specified so that the Director may make necessary arrangements.

The observation and/or approval of the workmanship or materials by the City shall not relieve the Contractor of any obligations to fulfill the requirements of the Contract Documents. Workmanship and materials not meeting such requirements shall be corrected and unsuitable Work or material may be rejected, notwithstanding that such Work or materials have been previously observed and/or approved by the City, or payment therefor has been included in a progress estimate.

The City may order re-examination of questioned Work at any time before final Acceptance. If so ordered, the Contractor shall uncover the Work. If such work is found to be in accordance with the Contract Documents, the City will pay for the cost of uncovering, removing, recovering and replacing the parts removed; but if such Work so exposed or examined is not in accordance with the Contract Documents, the uncovering, removal, recovering and replacement shall be at the Contractor's expense. Work that has been covered prior to observation by the City does not qualify as re-examined work; the City may order such work uncovered for observation without payment of any costs.

XIV. 2-1.27 **REMOVAL OF REJECTED AND UNAUTHORIZED WORK.** All Work which has been rejected shall be remedied, or removed and replaced by the Contractor in a manner acceptable to the Director and no compensation will be allowed the Contractor for such removal, replacement, or remedial Work.

Any Work done beyond the lines shown on the Contract Drawings or established by the Director, or any Work done without written authority will be considered as unauthorized Work and will not be paid for. Upon order of the Director, unauthorized Work shall be remedied, removed, or replaced at the Contractor's expense.

Upon failure of the Contractor to comply promptly with any order of the Director made under this section, the Director may cause rejected or unauthorized Work to be remedied, removed, or replaced, and the costs thereof will be deducted from any moneys due or to become due the Contractor.

XV. SECTION 3

CHANGES IN THE WORK

3-1.01 **CHANGES.** The Director, without invalidating this Agreement and without notice to Contractor's surety, may order changes in the Work, consisting of additions or deletions, or other revisions. The Contract Price and the Contract Time shall be adjusted accordingly. All such changes in the Work, including in the Contract Price and the Contract Time, shall be authorized only by Contract Change Order, signed by the Director.

If Contractor claims that performance of any work entitles it to additional compensation or to an extension of time for performance of the Work, Contractor shall provide written notice to the City of any such claim prior to undertaking such work. Contractor shall provide written notice of any anticipated impacts to the Contract Price or Contract Time within three (3) Days of discovering such impact, by submitting a Notice of Potential Claim described in Section 7-1.03 below, or notice of delay as described in Section 6-1.09 below. If the Director refuses to issue a Change Order for such work, Contractor shall perform that work if directed or obligated to do so and shall submit a complete and specific Claim for additional compensation and/or extension of time for performance within fifteen (15) Days after such work is performed, as described in Section 7-1.03 below. Failure to provide written notice of claims prior to undertaking such work, failure to provide a timely Notice of Potential Claim, or failure to submit timely a complete and specific Claim for additional compensation and/or extension of the time for performance, shall be deemed a waiver and abandonment of any such Claim. No Claim, dispute or controversy shall interfere with the progress or performance of the Work and the Contractor shall proceed with the Work as directed by the Director. Failure to so proceed shall amount to a

default under this Agreement.

3-1.02 **PROPOSED CHANGE ORDERS.** The Contractor will be notified in writing of a proposed Change Order describing the intended change. Within fifteen (15) Days after receipt of a written request, the Contractor shall submit its proposed price to be added or deducted from the Contract Price due to the change and its estimate of the extent of the adjustment in the Contract Time, if any. The Contractor's proposed price to be added to or deducted from the Contract Price shall be supported by a detailed estimate of cost prepared by the Contractor, vendor or Supplier. The Contractor's proposed price submittal shall be accompanied by a statement of the time necessary for the changed Work, together with a description of how this time will be incorporated into the current Construction Schedule. The Contractor shall upon request by the Director permit inspection of its original Contract estimate, subcontract agreements or purchase orders relating to the change.

If agreement is reached on the adjustment in compensation as provided in Section 3-1.05, "Contract Price Adjustment," of these General Conditions, the Contractor shall proceed with the Work as changed at the agreed price.

If the Contractor and the Director fail to agree as to the adjustment in compensation for the performance of the changed Work, the Contractor, upon written order from the Director, shall proceed immediately with the changed Work and the Contract Price shall be adjusted in accordance with Section 3-1.06, "Force Account Payment," of these General Conditions.

If the Contractor fails to submit its cost estimate within such fifteen (15) Day period, the Contractor shall commence the Work as changed immediately upon receipt of written order of the Director, and the Contract Price will be adjusted in accordance with the Director's cost estimate for the changed Work.

3-1.03 **EMERGENCY AND INDETERMINATE TYPE CHANGE ORDERS.** Changes in the Work made necessary by an Emergency, as determined by the Director, or changes of a kind where the extent of the Work cannot be determined until completed, may be authorized by the Director in writing. The Change Order shall state that it is issued pursuant to this Section 3-1.03. Upon receipt of an authorized Change Order or other written order of the Director, the Contractor shall proceed with the ordered Work and the Director will maintain a daily job record containing a detailed summary of all labor, materials and equipment required for the changed Work.

Within fifteen (15) Days after receiving a written request, the Contractor shall submit a detailed estimate of cost for the change and any requested change in Contract Time in the same manner as required for proposed Change Orders in Section 3-1.02 of these General Conditions.

3-1.04 **EXECUTED CHANGE ORDER.** A Contract Change Order signed by both the Director and the Contractor is an "executed Contract Change Order." By signing the Contract Change Order, the Contractor agrees that the specified compensation constitutes full compensation for the changed Work, including payment for interruption, disruption, acceleration, extended Overhead, delay or any other "impact" claim or "ripple effect" claim. The Contractor specifically understands and agrees that its execution of the Contract Change Order shall constitute a waiver of any right for the Contractor to claim any additional compensation with respect to the subject matter of the Contract Change Order.

3-1.05 **CONTRACT PRICE ADJUSTMENT.** If a Contract Change Order provides for an adjustment to the Contract Price, the amount of such adjustment shall be determined by one of the following methods, or a combination thereof, as determined by the City and in its sole discretion:

A. Lump sum. The Contractor and the City may agree on a lump sum amount for the Change Order. At the City's request, the Contractor will provide pricing for the work. Maximum markups for Contract Change Orders paid for using lump sum pricing shall be paid for in the same manner and in the same amounts as markups for Force Account work, as described in Section 3-1.06 below.

B. Unit Prices. The unit prices set forth in the Contractor's Schedule of Bid Prices will be utilized where they are applicable and acceptable to the City. The Contractor's unit prices shall remain firm and shall not be subject to adjustment unless and until the actual quantity of work is increased or decreased by Contract Change Order in an amount greater than twenty-five percent (25%) from the estimated quantity indicated for such item. No markups will be given for Contract Change Orders paid for using unit prices.

Unit prices for new items included in the Contract Change Order but not included in the original bid shall be as mutually agreed upon or, in the absence of agreement, as determined by the City in the same manner as if the work were to be paid for on a Force Account basis, as described in Section 3-1.06 below.

C. Force Account. Where the City and the Contractor are unable to agree on lump sum pricing and if the City does not elect to utilize the unit prices in Contractor's bid, or such unit prices are not applicable, the changed work will be performed and tracked by the Contractor as Force Account work, as described in Section 3-1.06 below. The City will pay for such work, including markups, properly attributable to the change in accordance with those Force Account provisions.

D. Eliminated Items. The City reserves the right to delete any bid item of Work in its entirety. The City makes no representation that any work under a bid item of Work

will be performed, and all work may be subject to a Contract Change Order that deletes such work. Bid items are distinct and severable from the other bid items, and the Contractor shall not be entitled to any anticipated profit, unabsorbed Overhead, or other indirect expense attributable to the deleted item, except as provided immediately below with regard to Force Account mark-ups on the direct and verifiable costs incurred prior to the City's order that deletes the work.

Should any bid item of Work be eliminated in its entirety and not accounted for as described immediately above and, in the absence of an executed Contract Change Order covering such elimination, payment will be made to the Contractor for actual direct and verifiable costs incurred in connection with such eliminated bid item if incurred prior to the date of notification in writing by the City of such elimination. If acceptable material is ordered by the Contractor for the eliminated item prior to the date of notification of such elimination by the City, and if orders for such material cannot be canceled, it will be paid for at the actual direct and verifiable cost to the Contractor. Actual direct costs shall include documented vendor shipping fees, Supplier restocking fees, if applicable, and Contractor handling costs directly related to the eliminated item(s). In such case, the material paid for shall become the property of the City and the actual cost of any further handling will be paid for by the City. If the material is returnable to the vendor and if the City so directs, the material shall be returned and the Contractor will be paid for the actual direct cost of charges made by the vendor for returning the material. The actual direct cost of handling returned materials will also be paid for by the City. The actual direct and verifiable costs to be paid by the City as provided herein will be computed in the same manner as if the work were to be paid for on a Force Account basis, including the application of Force Account mark-ups to said costs.

3-1.06 **FORCE ACCOUNT PAYMENT.** When Work performed pursuant to a

Change Order is to be paid for on a Force Account basis, the Contractor's labor, materials and equipment used in the performance of such Work shall be subject to the approval of the City, and the compensation will be determined as set forth below in this section.

3-1.06A **LABOR.** The Contractor will be paid an amount based on the actual cost for the workers (including foremen when authorized by the Director) used in the actual and direct performance of the Work. All labor costs associated with Overhead, whether field or home office, are specifically excluded herein, as those labor costs are covered by the below mark-ups. The cost of labor, whether the employer is the Contractor, Subcontractor or other forces, shall include employer payments; assessment of benefits required by lawful labor union collective bargaining agreements; compensation insurance payments; contributions made to the State pursuant to the Unemployment Insurance Code; and for taxes paid to the Federal Government pursuant to the Social Security Act of August 14, 1935, as amended. No labor cost will be recognized at a rate in excess of the wages prevailing in the locality at the time the Work is performed, nor will the use of a labor classification, which would increase the cost, be permitted unless the Contractor establishes to the complete satisfaction of the Director the necessity for payment at a higher rate.

3-1.06B **MATERIALS.** Only materials furnished by the Contractor and necessarily used in the performance of the Work will be paid for. Such cost of materials may include the costs of procurement, transportation and delivery if necessarily incurred. If a cash or trade discount by the actual supplier is available to the Contractor, it shall be credited to the City. If materials are procured by the purchaser by any method which is not a direct purchase from and a direct billing by the actual supplier to such purchaser, the cost of such materials shall be deemed to be the price paid to the actual supplier plus the actual costs, if any, incurred in the

handling of such materials. If the materials are obtained from a supply or source owned wholly or in part by the purchaser, the cost of such materials shall not exceed the price paid by the purchaser for similar materials furnished from said source on Bid items or the current wholesale price for such materials delivered to the job site, less any discounts as provided herein, whichever is lower. If, in the opinion of the Director, the cost of materials is excessive, or if the Contractor fails to furnish satisfactory evidence of the cost to it from the actual supplier within sixty (60) Days after the date of delivery of the materials or within fifteen (15) Days after Acceptance of the Agreement, whichever occurs first, the cost of the materials shall be deemed to be the lowest current wholesale price at which similar materials are available in the quantities required, less any discounts provided herein. The Department reserves the right to furnish such materials required by the Change Order as it deems advisable, and the Contractor shall have no claim for cost or markups on material furnished by the Department.

3-1.06C **EQUIPMENT.** The Contractor will be paid an amount based on the actual cost for the use of equipment directly required and approved by the Director in the performance of the changed Work. No payment will be made for time while equipment is inoperative due to breakdowns or on Days when no Work is performed. In addition, the rental time shall include the time required to move the equipment to the Work from the nearest available source of such equipment, and to return it to the source. If such equipment is not moved by its own power, then loading and transportation costs will be paid. Moving time, loading and transportation costs will only be paid if the equipment is used exclusively on the changed Work during the time between move in and move out. Individual pieces of equipment having a replacement value of One Thousand Dollars ($1000) or less shall be considered to be tools or small equipment, and no payment will be made therefore. For equipment owned,

furnished, or rented by the Contractor, no cost therefore shall be recognized in excess of the equipment rental rates published by Caltrans at the following website address: http://www.dot.ca.gov/hq/construc/equipmnt.html. Equipment located at a Work Site and utilized on non-Force Account work shall not eligible for standby payment, and shall be charged on a Force Account basis only when solely performing pre-approved Force Account work tasks.

3-1.06D **MARKUPS.** When a Change Order increases the cost of the Work, the Contractor may add the following maximum markups to its actual costs of labor, materials, or equipment rental:

15 percent for labor;

10 percent for materials; and

5 percent for equipment rental.

The above markups include full compensation, covering the costs of all supervision, bonds, profit, Overhead, and other general expenses not specifically designated as a direct cost in Sections 3-1.06A through 3-1.06C above. The total payment (i.e., direct cost plus applicable markups) shall be deemed to be the actual cost of such work and shall constitute full compensation therefor. The Contractor specifically understands and agrees that such payment shall include any Contractor costs for interruption, disruption, and acceleration, extended Overhead, Change Order management, delay or other "impact" claim or "ripple effect" claim.

When work paid for on a Force Account basis is performed by forces other than the Contractor's own forces, the maximum allowable mark-ups for the Subcontractors' costs shall be fifteen percent (15%) for the cost of labor, ten percent (10%) for the cost of materials, and five percent (5%) for the cost of rented equipment. In these situations where the work is being performed by Subcontractors, the Contractor will only be entitled to an additional five percent

(5%) mark-up and will not be entitled to receive the additional mark-ups specified in this section.

When a Change Order decreases the cost of the Work, the reduction in cost shall include a five percent (5%) markup on the estimated cost for furnishing the labor, materials and equipment, which would have been used on such Work, had the Change Order not been issued.

When a Change Order involves both added Work and deleted Work, the markup or markups to be used shall be as follows:

The actual costs of labor, materials, and equipment rental for added and deleted Work shall be calculated separately without adding markups. If the difference between the calculated costs for labor results in an increased cost, a markup of fifteen percent (15%) shall be applied to the increased cost. If the difference between the calculated costs of materials or equipment rental results in an increased cost, a markup of ten percent (10%) and five percent (5%) respectively, shall be applied to the increased costs of materials or equipment rental, as the case may be. If the difference between the calculated costs for labor, materials or equipment rental results in a decreased cost, a markup of five percent (5%) shall be applied to the decreased costs of labor, materials or equipment rental, as the case may be.

Contractor shall not add mark-ups on work performed and billed by City staff nor add mark-ups to successive iterations of proposed Change Order cost proposals returned to Contractor by the City due to incomplete or inaccurate information being originally submitted by the Contractor. If the Contract Price increases by the issuance of Change Orders, the penal amounts of the bonds required shall increase accordingly.

3-1.06E **RECORDS.** The Contractor shall maintain its records in such a manner as to provide a clear distinction between the direct costs of extra work paid for on a Force Account basis and the costs of other operations.

From the above records, the Contractor shall furnish the City completed daily extra work reports, on forms acceptable to the City, for each Day's extra work to be paid for on a Force Account basis. The daily extra work reports shall itemize the materials used, and shall cover the direct cost of labor and the charges for equipment rental, whether furnished by the Contractor, Subcontractor, or other forces. The daily extra work reports shall provide names and identifications and classifications of workers, the hourly rate of pay and hours worked, and also the size, type, and identification number of equipment, and hours operated. Daily extra work and Force Account reports (actual or claimed) shall be signed by both the City's and the Contractor's representatives within twenty-four (24) hours of the performance of the work.

Valid copies of vendor's invoices shall substantiate material charges. Such invoices shall be submitted with the daily extra work reports, or if not available, they shall be submitted with subsequent daily extra work reports. Should said vendor's invoices not be submitted within sixty (60) Days after the date of delivery of the material or within fifteen (15) Days after the Acceptance of the Agreement, whichever occurs first, the City reserves the right to establish the cost of such materials at the lowest current wholesale prices at which said materials were available in the quantities, less any discounts.

The City will compare its records with the completed daily extra work reports furnished by the Contractor and make any necessary adjustments. When these daily extra work reports are agreed upon and signed by both parties, said reports shall become the basis of payment for the work performed, but shall not preclude subsequent adjustment based on a later audit by the City.

The Contractor's cost records pertaining to Work paid for on a Force Account basis shall be open to inspection or audit by representatives of the City during the life of the Agreement and for a period of not less than three (3) years after the date of Agreement completion and the

Contractor shall retain such records for that period. Where payment for materials or labor is based on the cost thereof to forces other than the Contractor, the Contractor shall make every reasonable effort to insure that the cost records of such other forces will be open to inspection and audit by representatives of the City on the same terms and conditions as the cost records of the Contractor. If an audit is to be commenced more than sixty (60) Days after the date of Acceptance of the Agreement, the Contractor will be given fifteen (15) Days' notice of the time when such audit is to begin.

3-1.07 **COST REDUCTION PROPOSALS.** The City encourages the Contractor to submit Cost Reduction Proposals whenever the Contractor identifies areas and/or instances in which there can be savings to the Work. Contractor may submit to the City, in writing, proposals for modifying the plans, Specifications or other requirements of the Agreement for the sole purpose of reducing the total cost of construction, including the time for completion of the Work. The City may consider such Cost Reduction Proposals and, if accepted, the Agreement will be equitably adjusted. The City has no obligation to consider or accept Cost Reduction Proposals.

XVI. SECTION 4

CONTROL OF MATERIALS

4-1.01 **MATERIALS.** The Contractor shall furnish all materials required to complete the Work, except materials that are designated in the Supplemental Conditions to be furnished by the City and materials furnished by the City in accordance with Section 3, "Changes in the Work," of these General Conditions.

Unless otherwise specified in the Supplemental Conditions, materials furnished by the Contractor for incorporation into the Work shall be new. When the quality or kind of materials, articles, or equipment is not particularly indicated, then the quality or kind thereof shall be similar to those that are indicated.

Articles or materials to be incorporated in the Work shall be stored in such a manner as to insure the preservation of their quality and fitness for the Work, and to facilitate inspection.

All materials which do not conform to the requirements of the Contract Documents as determined by the Director, will be rejected whether in place or not. Rejected material shall be removed immediately from the site of the Work, unless otherwise permitted by the Director. No rejected material, the defects of which have been subsequently corrected, shall be used in the Work, unless approval in writing has been given by the Director. Upon failure of the Contractor to comply promptly with any order of the Director made under these provisions, the Director shall have the authority to cause the removal and replacement of rejected material and to deduct the cost thereof from any moneys due or to become due the Contractor.

Manufacturer's warranties, guaranties, instruction sheets and parts lists, which are furnished with certain materials incorporated in the Work, shall be delivered to the Director

before Acceptance of the Contract.

Unless otherwise designated in the Supplemental Conditions or Specifications, materials furnished by the City will be delivered to the job site. Materials furnished by the City that are designated in the Supplemental Conditions as available at locations other than the job site shall be hauled to the site of the Work by the Contractor at its expense, including any necessary loading and unloading that may be involved.

The Contractor will be held responsible for all materials furnished to it, and shall pay all demurrage and storage charges. City-furnished materials lost or damaged from any cause whatsoever shall be replaced by the Contractor. The Contractor will be liable to the Department for the cost of replacing City-furnished material and such costs may be deducted from any moneys due or to become due the Contractor.

4-1.02 **PRODUCT AND REFERENCE STANDARDS.** When descriptive catalog designations, including manufacturer's name, product brand name, or model number are referred to in the Contract Documents, such designations shall be considered as being those found in industry publications in effect on the day the Notice to Contractors for the Work is dated, except as may be otherwise stated.

When standards or test designations of the Federal Government, trade societies, or trade associations are referred to in the Contract Documents by specific date of issue, these shall be considered as part of the Contract. When such references do not bear a date of issue, the edition in effect on the day the Notice to Contractors for the Work is dated shall be considered as part of the Contract.

4-1.03 **SAMPLING AND TESTING OF MATERIALS.** Unless otherwise specified, all tests shall be performed in accordance with the methods used by the State

Department of Transportation (Caltrans) and shall be made by the Director or his or her designated representative.

The State Department of Transportation has developed test methods for testing the quality of materials and Work. These test methods are identified by a California Test followed by the serial number. Copies of individual tests are available at the State Department of Transportation Laboratory, Sacramento, California, and will be furnished to interested persons upon request.

Whenever a reference is made in the Supplemental Conditions to a California Test by number, it shall mean the California test in effect on the day the Notice to Contractors for the Work is dated.

Whenever the Supplemental Conditions provide an option between two (2) or more test methods, the Director will determine the test method to be used.

Whenever a Supplemental Condition, manual, or test designation provides for test reports (such as certified mill test reports) from the manufacturer, copies of such reports, identified as to the lot of material, shall be furnished to the Director. The manufacturer's test reports shall supplement the inspection, sampling and testing provisions of this Section 4-1.03 and shall not constitute a waiver of the City's right to inspect. When material which cannot be identified with specific test reports is proposed for use, the Director may at his or her discretion, select random samples from the lot for testing. Testing specimens from the random samples, including those required for retest, shall be prepared in accordance with the referenced Supplemental Conditions and furnished by the Contractor at its expense. The number of such samples and test specimens shall be entirely at the discretion of the Director.

When requested by the Director, the Contractor shall furnish, without charge, samples of

all material entering into the Work, and no material shall be used prior to approval by the Director, except as provided in Section 4-1.04, "Certificates of Compliance," of these General Conditions.

A. Inspection and Access for Testing. The Contractor shall provide safe access for the Director and his or her inspectors to adequately inspect the quality of Work and conformance with the General and Supplemental Conditions. The Contractor shall provide adequate lighting, ventilation, ladders and other protective facilities as may be necessary for the safe performance of inspections.

The Contractor shall submit samples or specimens of such materials to be furnished or used in the Work as the Director may require. The Contractor shall furnish the Director all necessary labor and facilities for such things as excavation in the compacted fill to depths required to take samples.

Inspections, tests, or favorable review by the Director or others shall not relieve the Contractor from its obligations to perform the Work in accordance with the requirements of the Contract Documents.

Work covered without the favorable review or consent of the Director shall, if required by the Director, be uncovered for examination at the Contractor's expense.

If the Engineer, Architect, or Director considers it necessary or advisable that covered Work be inspected or tested by others, the Contractor, at the Director's request, will uncover, expose or otherwise make available for observation, inspection or testing as the Director may require, that portion of the Work in question, furnishing all necessary labor, materials, tools, and equipment. If it is found that such Work is defective, the Contractor will bear all the expenses of such uncovering, exposure, observation, inspection and testing and of

satisfactory reconstruction. If, however, such Work is not found to be defective and the Work was not covered without favorable review of the Director, the Contractor will be allowed an increase in the Contract Price or an extension of the Contract Time, or both, to cover its costs directly attributable to such uncovering, exposure, observation, inspection, testing, and reconstruction and an appropriate Change Order shall be issued.

Whenever the Contractor varies the period during which Work is carried on each Day, the Contractor shall give due notice to the Director so that proper inspection may be provided. Any Work done in the absence of the Director may be subject to rejection. Proper facilities for safe access for inspection to all parts of the Work shall at all times be maintained for the necessary use of the Director and other agents of the City. Authorized representatives and agents of the Director shall be permitted access to inspect all Work and materials wherever it is required for preparation of progress reports, and the Contractor shall provide proper facilities for such access and inspection.

It is the Contractor's responsibility to supervise the Work and complete the project in accordance with the Contract Documents. In the course of managing that effort, the Contractor shall generate its own punch lists as deemed necessary. The Director may prepare punch lists for the Director's own use in communicating with the Contractor; however, the Director shall be under no obligation to prepare punch lists for the Contractor. In general, the Director will prepare punch lists only after the Contractor has given the Director written notice that the subject Work is completed and tested in accordance with the Contract Documents and is ready for operation and/or use and/or occupancy. Failure of the Director to include an item in a punch list shall not relieve the Contractor of its duty to satisfactorily complete all Work required by the Contract Documents.

Upon Final Completion of the construction Work and request by the Contractor, the Director will conduct a final inspection as a basis for recommending to the City that the Work be accepted.

B. Field and Materials Testing. Where the Supplemental Conditions require Work to be specially field tested or approved, it shall be tested only in the presence of the Director after timely notice of its readiness for inspection and test, and the Work after testing shall be covered up only upon the consent thereto of the Director.

The results of any tests made are for the information of the Director. Regardless of any test results, the Contractor is solely responsible for the quality of workmanship and materials and for compliance with the requirements of the Contract Drawings and Supplemental Conditions.

Except as specifically required under the Supplemental Conditions, all tests by the Director of materials furnished by the Contractor will be done in accordance with commonly recognized standards of national organizations. The Contractor shall furnish such samples of all materials as required by the Director without charge. No material shall be used unless it has been favorably reviewed by the Director.

Where such inspection and testing are to be conducted by an independent Laboratory or agency, the sample or samples of materials to be tested shall be selected by such Laboratory or agency, or the Director, and not by the Contractor.

C. Costs of Testing.

1. Initial Services: The City shall furnish and pay for all initial testing services required by the Contract Documents. When initial tests indicate non-compliance with the Contract Documents, the cost of initial tests associated with that non-compliance will be

deducted by the City from the balance owed the Contractor. The Contractor shall furnish samples of materials for testing as may be required by the Director. Such samples shall be furnished without cost to the City.

2. Retesting: When initial tests indicate non-compliance with the Contract Documents, all subsequent retesting occasioned by the non-compliance shall be performed by the same testing Laboratory and the cost thereof will be deducted by the City from the balance owed the Contractor. Contractor shall be billed for each additional test.

3. Contractor Convenience Testing: Inspection or testing performed exclusively for the Contractor's convenience shall be the sole responsibility of the Contractor.

4. Additional Tests and Inspections: When in the opinion of the Director additional tests or inspections are required because of the manner in which the Contractor executes its Work, such tests and inspections shall be paid for by the City, but will be deducted from the Contract Price. Examples of such tests and inspections are tests of materials substituted for previously accepted materials or substituted for specified materials, retests made necessary by failure of material to comply with the requirements of the Specifications, load tests made necessary because of portions of the structure not fully meeting Specifications or plan requirements, etc.

4-1.04 **CERTIFICATES OF COMPLIANCE.** A Certificate of Compliance shall be furnished prior to the use of any materials for which the Supplemental Conditions require that such a Certificate be furnished. In addition, the Director may permit the use of certain materials or assemblies prior to sampling and testing if accompanied by a Certificate of Compliance. The Certificate shall be signed by the manufacturer of the material or the manufacturer of assembled materials and shall state that the materials involved comply in all

respects with the requirements of the Supplemental Conditions. A Certificate of Compliance shall be furnished with each lot of such materials delivered to the Work and the lot so certified shall be clearly identified in the Certificate.

All materials used on the basis of a Certificate of Compliance may be sampled and tested at any time. The fact that material is used on the basis of a Certificate of Compliance shall not relieve the Contractor of responsibility for incorporating material in the Work which conforms to the requirements of the Contract Documents and any such material not conforming to such requirements will be subject to rejection whether in place or not.

The Department reserves the right to refuse to permit the use of material on the basis of a Certificate of Compliance.

The form of the Certificate of Compliance and its disposition shall be as directed by the Director.

XVII. SECTION 5

LEGAL RELATIONS AND RESPONSIBILITY

5-1.01 **LAWS TO BE OBSERVED.** The Contractor shall keep informed of and observe, and comply with and cause all of its agents and employees to observe and comply with, all prevailing Federal and State laws, and rules and regulations made pursuant to said Federal and State laws, and county and municipal ordinances, and regulations, which in any way affect the conduct of the Contract. If any conflict arises between provisions of the Contract and any such law above referred to, the Contractor shall notify the Director at once in writing. To the fullest extent allowed by law, the Contractor shall defend, indemnify, and save and hold harmless the City or any of its officers, agents, employees, and volunteers against any claim or liability arising from or based on the violation of any such law, rule, or regulation, whether by itself or its agents or employees.

5-1.02 **HOURS OF LABOR.** Eight (8) hours labor constitutes a legal Day's work. The Contractor or Subcontractor shall, as a penalty to City, forfeit Twenty-five Dollars ($25) for each worker employed in the execution of the contract by the respective Contractor or Subcontractor for each calendar day during which such worker is required or permitted to work more than eight (8) hours in any one (1) calendar day and forty (40) hours in any one (1) calendar week in violation of the provisions of the Labor Code, and in particular, Section 1810 to Section 1815, thereof, inclusive, except that Work performed by employees of Contractors in excess of eight (8) hours per day, and forty (40) hours during any one (1) week, shall be permitted upon public work upon compensation for all hours worked in excess of eight (8) hours per day at not less than one and one-half (1-1/2) times the basic rate of pay, as provided in said

Section 1815. In addition, Contractor and/or its Subcontractors may be required to pay double the basic rate of pay for all hours worked in excess of twelve (12) hours in any workday and under other circumstances. (See California Code of Regulations, Title 8, Sections 16100(c)(6) and (16200(a)(3)(F) and applicable Department of Industrial Relations prevailing wage determinations.)

5-1.03 **NONDISCRIMINATION.**

A. Attention is directed to Labor Code Section 1735, which reads as follows:

"A contractor shall not discriminate in the employment of persons upon public works on any basis listed in subdivision (a) of Section 12940 of the Government Code, as those bases are defined in Sections 12926 and 12926.1 of the Government Code, except as otherwise provided in Section 12940 of the Government Code. Every Contractor for public works who violates this section is subject to all the penalties imposed for a violation of this chapter."

B. During the performance of this Contract, Contractor and its Subcontractors shall not unlawfully discriminate against any employee or applicant for employment because of race, religious creed, color, national origin, ancestry, physical disability, mental disability, medical condition, genetic information, marital status, sex, gender, gender identity, gender expression, age, sexual orientation, or military and veteran status. The Contractor and Subcontractors shall insure that the evaluation and treatment of their employees and applicants for employment are free of such discrimination. The Contractor and Subcontractors shall comply with the provisions of the California Fair Employment and Housing Act (Government Code §12900, et seq.) and the applicable regulations promulgated thereunder (California Code of Regulations, Title 2, §7285.0 et seq.) and other applicable State and Federal regulations and City

policies pertaining to nondiscrimination and affirmative action which are incorporated into this Agreement by reference and made a part hereof as if set forth in full. The Contractor and its Subcontractors shall give written notice of their obligations under this clause to labor organizations with which they have a collective bargaining or other agreement.

C. Contractor shall include the nondiscrimination and compliance provisions of this clause in all subcontracts to perform Work under the agreement.

5-1.04 **PREVAILING WAGE.** The Contractor and any Subcontractor shall comply with Labor Code Sections 1770 et seq. In accordance with said Section 1775 the Contractor and any Subcontractor under the Contractor shall, as a penalty, forfeit to the state or City not more than $200 for each calendar day or portion thereof, for each worker paid less than the prevailing rate as determined by the Director of Industrial Relations for the work or craft in which such worker is employed for under the Contract by the Contractor or by any Subcontractor under the Contractor.

The amount of the penalty shall be determined by the Labor Commissioner based on consideration of both of the following: (a) whether the failure to pay the correct rate of per diem wages was a good-faith mistake and, if so, whether the error was promptly and voluntarily corrected when brought to the attention of the Contractor or Subcontractor; and (b) whether the Contractor or Subcontractor has a prior record of failing to meet its prevailing wage obligations.

The penalty may not be less than forty dollars ($40) for each calendar day, or portion thereof, for each worker paid less than the prevailing wage rate, unless the failure of the Contractor or Subcontractor to pay the correct rate of per diem wages was a good faith mistake and, if so, the error was promptly and voluntarily corrected when brought to the attention of the Contractor or Subcontractor.

The penalty may not be less than eighty dollars ($80) for each calendar day, or portion thereof, for each worker paid less than the prevailing wage rate, if the Contractor or Subcontractor has been assessed penalties within the previous three (3) years for failing to meet its prevailing wage obligations on a separate contract, unless those penalties were subsequently withdrawn or overturned.

The penalty may not be less than one hundred twenty dollars ($120) for each calendar day, or portion thereof, for each worker paid less than the prevailing wage rate, if the Labor Commissioner determines that the violation was willful, as defined in subdivision (c) of Section 1777.1 of the Labor Code.

If the amount due under this section is collected from the Contractor or Subcontractor, any outstanding wage claim under Chapter 1 (commencing with Section 1720) of Part 7 of Division 2 of the Labor Code against the Contractor or Subcontractor shall be satisfied before applying that amount to the penalty imposed on that Contractor or Subcontractor pursuant to this section.

The determination of the Labor Commissioner as to the amount of the penalty shall be reviewable only for an abuse of discretion.

In addition to said penalty, the difference between such stipulated prevailing wage rates and the amount paid to each worker for each calendar day or portion thereof for which each worker was paid less than the stipulated prevailing wage shall be paid to each worker by the Contractor or Subcontractor.

If a worker employed by a Subcontractor on a public works project is not paid the general prevailing per diem wages by the Subcontractor, the Contractor is not liable for any penalties described above unless the Contractor had knowledge of that failure of the Subcontractor to pay

the specified prevailing rate of wages to those workers or unless the Contractor fails to comply with all of the following requirements:

1. The contract executed between the Contractor and the Subcontractor for the performance of work on the public works project shall include a copy of the provisions of Sections 1771, 1776, 177.5, 1813, and 1815 of the Labor Code.
2. The Contractor shall monitor the payment of the specified general prevailing rate of per diem wages by the Subcontractor to the employees, by periodic review of the certified payroll records of the Subcontractor.
3. Upon become aware of the Subcontractor's failure to pay its workers the specified prevailing rate of wages, the Contractor shall diligently take corrective action to halt or rectify the failure, including, but not limited to, retaining sufficient funds due the Subcontractor for work performed on the public works project.
4. Prior to making final payment to the Subcontractor for work performed on the public works project, the Contractor shall obtain an affidavit signed under penalty of perjury from the Subcontractor that the Subcontractor has paid the specified general prevailing rate of per diem wages to its employees on the public works project and any amount due pursuant to 1813 of the Labor Code.

Pursuant to Section 1775 of the Labor Code, the Division of Labor Standards Enforcement shall notify the Contractor on a public works project within fifteen (15) Days of the receipt by the Division of Labor Standards Enforcement of a complaint of the failure of a Subcontractor on that public works project to pay workers the general prevailing rate per diem wages.

Pursuant to the provisions of California Labor Code Section 1773, the City has obtained

the general prevailing rate of wages applicable to the categories of workers the City anticipates will be utilized for this project for straight time, overtime, Saturday, Sunday, and holiday Work. The holiday wage rate listed shall be applicable to all holidays recognized in the collective bargaining agreement of the particular craft, classification or type of worker concerned or, if no collective bargaining applies, those holidays identified in Government Code Section 6700. These wage rates may be obtained from the State Department of Industrial Relations and/or the following website address: http://www.dir.ca.gov/dlsr/DPreWageDetermination.htm, which is incorporated herein as a part of this Contract.

Pursuant to Labor Code Section 1773.2, the general prevailing wage rates set forth above, which forms a part of this Contract, shall be posted by the Contractor at a prominent place at the site of the Work.

Pursuant to Labor Code Section 1773.6 and California Code of Regulations Section 16204, Title 8, changes in general prevailing wage determinations shall apply to the project only if issued by the Director of Industrial Relations prior to the City's bid issuance date.

The City will not recognize any claim for additional compensation because of the payment by the Contractor of any wage rate in excess of the prevailing wage rate set forth in the Contract. The possibility of wage increases is one of the elements to be considered by the Contractor in determining its Bid, and will not under any circumstances be considered as the basis of a claim against the City or Contract.

When both California and Federal prevailing wage rates apply, the Contractor and any Subcontractors shall pay their workers the higher of the two rates. The Contractor and any Subcontractors shall insert this clause in any lower tier contract.

5-1.05 **REGISTRATION REQUIRED AS QUALIFICATION TO BID.**

Pursuant to Labor Code Section 1771.1(b), notice is hereby given that a Contractor or Subcontractor shall not be qualified to bid on, be listed in a bid proposal, subject to the requirements of Section 4104 of the Public Contract Code, or engage in the performance of any contractor for public work, as defined in Labor Code Sections 1720, et seq., unless currently registered and qualified to perform public work pursuant to Labor Code Section 1725.5. It is not a violation of Labor Code Section 1771.1 for an unregistered contractor to submit a bid that is authorized by Section 7029.1 of the Business and Professions Code or by Section 10164 or 20103.5 of the Public Contract Code, provided the contractor is registered to perform public work pursuant to Section 1725.5.

5-1.06 **PAYROLL RECORDS.** The Contractor's attention is directed to the following provisions of Labor Code Section 1776. The Contractor shall be responsible for the compliance with these provisions by its Subcontractors.

A. The Contractor and each Subcontractor shall keep accurate and current payroll records, showing the name, address, social security number, work classification, straight time and overtime hours worked each day and week, and the actual per diem wages paid to each journeyman, apprentice, worker, or other employee employed by it in connection with the public work. Each payroll record shall contain or be verified by a written declaration that is made under penalty of perjury, stating both of the following:

1. The information contained in the payroll record is true and correct.

2. The employer has complied with the requirements of Section 1771, 1811, and 1815 for any work performed by his or her employees on the public works project.

B. The payroll records enumerated under subdivision (A) shall be available for inspection at all reasonable hours at the principal office of the Contractor on the following

basis:

1. A certified copy of an employee's payroll record shall be made available for inspection or furnished to such employee or his or her authorized representative on request.

2. A certified copy of all payroll records enumerated in subdivision (A) shall be made available for inspection or furnished upon request to a representative of the City, the Division of Labor Standards Enforcement, and the Division of Apprenticeship Standards of the Department of Industrial Relations. The City reserves the right to withhold any progress payments to the Contractor in the event of noncompliance with the subsection.

3. A certified copy of all payroll records enumerated in subdivision (A) shall be made available upon request by the public for inspection or for copies thereof. However, a request by the public shall be made through either the City, the Division of Apprenticeship Standards, or the Division of Labor Standards Enforcement. The public shall not be given access to such records at the principal office of the Contractor.

C. The certified payroll records shall be on forms provided by the Division of Labor Standards Enforcement or shall contain the same information as the forms provided by the Division.

D. Each Contractor shall file a certified copy of the records enumerated in subdivision (A) with the entity that requested the records within ten (10) Days after receipt of a written request.

E. Any copy of the records made available for inspection as copies and furnished upon request to the public or any public agency by the City, the Division of Apprenticeship Standards or the Division of Labor Standards Enforcement shall be marked or

obliterated to prevent disclosure of an individual's name, address and social security number. The name and address of the Contractor awarded the Contract or Subcontractor performing the Contract shall not be marked or obliterated. Any copy of records made available for inspection by, or furnished to, a joint labor-management committee established pursuant to the federal Labor Management Cooperation Act of 1978 (Section 175a of Title 29 of the United States Code) shall be marked or obliterated only to prevent the disclosure of an individual's name and social security number. A joint labor-management committee may maintain an action in a court of competent jurisdiction against an employer who fails to comply with Section 1774. The court may award restitution to an employee for unpaid wages and may award the joint labor-management committee reasonable attorneys' fees and costs incurred in maintaining the action. An action under this subdivision may not be based on the employer's misclassification of the craft of a worker on its certified payroll records. Nothing in this subdivision limits any other available remedies for a violation of this section.

F. The Contractor shall inform the City of the location of the records enumerated under subdivision (A), including the street address, city and county, and shall, within five (5) business days, provide a notice of a change of location and address.

G. The Contractor shall have ten (10) Days in which to comply subsequent to receipt of written notice requesting the records enumerated in subdivision (A). In the event that the Contractor or Subcontractor fails to comply within the ten (10) Day period, the Contractor shall, as a penalty to the State or City, forfeit twenty-five ($25) Dollars for each calendar day, or portion thereof, for each worker, until strict compliance is effectuated. Upon the request of the Division of Apprenticeship Standards or the Division of Labor Standards Enforcement, these penalties shall be withheld from any progress payment or final payment then due. A contractor

is not subject to a penalty assessment pursuant to this section due to the failure of a Subcontractor to comply with this section.

5-1.07 **SAFETY REQUIREMENTS.** It is the intent of the parties that the City is not an exposing, creating, controlling, or correcting employer under California Labor Code Section 6400. In accordance with generally accepted construction practices and State law, the Contractor shall have the authority and be solely and completely responsible for conditions on the Work Site, including safety of all persons and property during performance of the Work. Moreover, the Contractor shall be the controlling employer and has the authority and responsibility to enforce Work Site safety. The Contractor shall be responsible for conducting daily safety inspections and assuring all hazards and violations are abated. The Contractor is responsible for assuring that all Subcontractors adhere to the minimum Cal/OSHA safety requirements and that each Subcontractor has an effective Cal/OSHA IIPP (Illness and Injury Prevention Program) in place that specifically addresses all potential exposures, such as, but not limited to, fall protection, confined space, and trenching/shoring. These requirements shall apply continuously and not be limited to normal working hours. The Contractor shall be responsible for any delay costs or damages in the event the progress of Work is slowed or stopped due to a safety violation.

The Contractor shall designate a safety officer and have in place a health and safety plan in accordance with the laws of State of California and conduct safety meetings and document them in accordance with the law. The Contractor shall have the safety record available for inspection during working hours and shall submit job site safety meeting reports with each Application for Payment.

Prior to Contractor commencing construction project work on City property, Contractor

shall make available copies of its Health and Safety Plan (HASP) that meets or exceeds applicable Cal/OSHA regulations. The Contractor's HASP shall also meet or exceed the requirements of any applicable City-wide or departmental specific Injury and Illness Prevention Programs (IIPP) and other HASP programs, procedures, and plans. Potentially applicable HASP programs, procedures, and plans include, but are not limited to, the following:

1. Bloodborne Pathogens Exposure Control Plan;
2. Confined Space Entry Procedure;
3. Electrical Safety Program (Lockout/Tagout);
4. Emergency Action Plans (Site Specific);
5. Fire Prevention Plans (Site Specific);
6. Hazardous Waste Operations Emergency Response Plan (or Equivalent);
7. Hazard Communication Program (SDS's and Right-to-Know training);
8. Heat Illness & Prevention Plan;
9. Hearing Conservation Program;
10. Hot Work/Welding Procedure;
11. Job Hazard Analyses/Standard Operating Procedures;
12. Traffic Control & Flagging;
13. Excavation/Dig Safe Procedure;
14. Fall Protection Plan;
15. Personal Protective Equipment Plan;
16. Respirable Crystalline Silica Exposure Control Plan;
17. Respirator Program;
18. Soils Management Plan (for contaminated soils); and

19. Transite (Asbestos) Pipe Work Procedure.

Additionally, Contractor shall be responsible for complying with all City-wide and departmental specific safety requirements as identified in the Supplemental Conditions or presented at a pre-construction meeting.

Contractor shall inform City in advance of the quantity of chemical(s) to be used for the project and the total quantity of chemical(s) that will be brought onto City property. In addition, Contractor shall provide City with one copy of the Safety Data Sheet (SDS) for each chemical expected to be used to complete the project and for each chemical brought to the Work Site, regardless of whether such chemicals are ultimately used for the project.

The services of the Director in conducting construction review of the Contractor's performance is not intended to include review of the adequacy of the Contractor's Work methods, equipment, bracing or scaffolding, or safety measures, in, on, or near the construction site. If a City employee observes a safety violation, the City employee will report the violation to the Contractor who is then responsible for assuring the violation is abated.

The Contractor is hereby informed that Work on this project could be hazardous. The Contractor shall carefully instruct all personnel working in potentially hazardous Work areas as to potential dangers and shall provide such necessary safety equipment and instructions as are necessary to prevent injury to personnel and damage to property. Special care shall be exercised relative to Work underground.

All Work and materials shall be in strict accordance with all applicable State, City, County, and Federal Rules, Regulations, and Codes, and attention is drawn to the requirements of Cal/OSHA. The Contractor shall be solely responsible for compliance with all City, County and State blasting requirements and for any damages caused by its operations.

To ensure compliance with California Labor Code Section 6705, the Contractor shall submit to the City, at least five (5) Days in advance of excavation of any trench five feet (5') or more in depth, Working Drawings to the Director showing the design of shoring, bracing, sloping and other provisions to be made for worker protection from the hazard of caving ground during the excavation of such trench or trenches. If such Working Drawings vary from the shoring system standards established by the Cal/OSHA Construction Safety Orders of the Division of Industrial Safety, the plan shall be prepared and signed by a registered civil or structural engineer in the State of California. This in no way relieves the Contractor from the requirement of maintaining safety in all operations performed by the Contractor or the Contractor's Subcontractors and nothing in this section shall be deemed to allow the use of a shoring, sloping or protective system less effective than that required by the Cal/OSHA Construction Safety Orders of the Division of Industrial Safety Contractor's Working Drawings shall be subject to approval insofar as the details affect the character of the finished Work and for compliance with design requirements applicable to the construction when specified or called for, but details of the design will be left to Contractor who shall be responsible for the successful construction of the Work. The City shall approve Working Drawings before any Work involving such drawings is performed. Approval and/or acceptance by the City or its designated agent only constitutes acknowledgment of the submission and does not constitute review or approval of the designs, design assumptions or criteria, completeness of submissions, applicability to areas of intended use, nor implementation of the plans, which are solely the responsibility of the Contractor and its registered engineer.

The Contractor shall perform its Work as not to expose personnel to, or to discharge into the atmosphere from any source whatever, smoke, dust, asbestos, toxic chemicals or other air

contaminants in violation of the laws, rules, and regulations of the governmental entities having jurisdiction and shall bear full and exclusive responsibility for any release of hazardous or non-hazardous chemicals or substances during the course of the Work. The Contractor shall immediately report any such release to the City. The Contractor shall be solely responsible for all claims and expenses associated with the response to, removal and remediation of the release, including, without limitation, payment of any fines or penalties levied against the City by any agency as a result of such release and shall defend, indemnify, and save and hold harmless the City, its officers, agents, employees, and volunteers from any claims arising from such release. For purposes of this section only, the term "claims" shall include:

1. All notices, orders, directives, administrative or judicial proceedings, fines, penalties, fees, or charges imposed by any governmental agency with jurisdiction; and

2. Any claim, cause of action, or administrative or judicial proceeding brought against the City, its officers, agents, employees, and volunteers for any loss, cost (including reasonable attorneys' fees), damage or liability, sustained or suffered by any person or entity, including the City.

If the performance of the Work creates any hazardous wastes, those wastes shall be properly disposed of according to federal, state, and local laws, at the expense of the Contractor. The Contractor shall dispose of the wastes under its own EPA Generator Number. In no event shall the City be identified as the generator. The Contractor shall notify the City of any such hazardous wastes and the City reserves the right to a copy of the results of any tests conducted on the wastes, and, at its cost, to perform additional tests or examine those wastes, prior to disposition. The Contractor shall defend, indemnify, and save and hold harmless the City, its

officers, agents, employees, and volunteers from any claims arising from the disposal of the hazardous wastes, regardless of the absence of negligence or other malfeasance by the Contractor. Disposal of all Hazardous Materials must be done in accordance with all laws and regulations. Copies of required regulatory documentation including copies of final manifests shall be supplied to the City.

Contractors or Subcontractors removing one hundred or more square feet (100') of asbestos must be "Certified" in accordance with State law. All Work involving exposure to asbestos and all other hazardous materials shall be performed with protection of personnel in compliance with all applicable regulations and safety requirements including, but not limited to, California Code of Regulations Section 1529, Title 8.

Nothing in these General Conditions is to be construed to permit Work not conforming to governing codes. When Contract Documents differ from governing codes, the Contractor shall furnish and Install the higher standards called for without extra charge.

5-1.08 **SUBSURFACE EXCAVATIONS, NOTIFICATION.** The Contractor shall contact the regional notification center, "Underground Service Alert," and schedule its Work to allow ample time for the center to notify its members and, if necessary, for any member to field locate and mark its facilities. Without limiting the foregoing, the Contractor's attention is directed to Government Code Sections 4216 to 4216.9, and in particular Section 4216.2.

5-1.09 **PUBLIC SAFETY.** The Contractor shall assume all responsibility for public safety during the performance of its Work, and all costs arising therefrom shall be included in the Contract Price. Whenever the Contractor's operations create a condition hazardous to traffic or to the public, it shall furnish, erect and maintain, at its expense, such fences, barricades, lights, signs, and other devices and take such other protective measures as are

necessary to prevent accidents or damage or injury to the public. The Contractor shall establish the pedestrian detours with comparable lighting to the original pedestrian areas. The Contractor shall arrange for such flaggers as are necessary to give adequate warning to traffic or to the public of any dangerous conditions affecting traffic. For Work in a public right-of-way, the Contractor shall comply with the rules and regulations of the State, County, or local agency that owns the right-of-way.

The Contractor shall promptly and fully comply with and carry out, and shall without separate charge therefor to the City, all safety and first aid requirements prescribed by all applicable Federal, State, and local laws and regulations, rules, and orders. The Work shall be done in a safe manner; and the Contractor shall safeguard the safety and health of its employees, Subcontractors, and the people of local communities. The Contractor shall also be reasonable for ensuring that its Subcontractors comply with the provisions of this section.

Upon the failure of the Contractor to comply with any of the requirements of this section, the City shall have the authority, but not the duty, to stop the Work until such failure is remedied. The Contractor shall not be entitled to an adjustment of the Contract Time or an increase in the Contract Price due to any such suspensions.

When required by the Contract Documents, the Contractor shall construct, maintain, and remove detours for use of public traffic, without additional cost to the City, unless separate payment is specified in the Special Provisions.

The failure or refusal of the Contractor to construct and maintain detours at the proper time shall be sufficient cause for closing down the work until such detours are in satisfactory condition for use by public traffic.

Due care shall be exercised to avoid injury to existing improvements or facilities, utility

facilities, adjacent property and trees, shrubs, and other plants that are not to be removed.

Trees, shrubs and other plants that are not to be removed, and pole lines, fences, signs, survey markers and monuments, buildings and structures, conduits, pipe lines, sewer and waterlines, highway facilities, and any other improvements or facilities, under or above ground, that are within or adjacent to the work limit line shall be protected from injury or damage, and the Contractor shall provide and Install suitable safeguards to protect such objects from injury or damage. If such objects are injured or damaged by reason of the Contractor's operations, they shall be replaced or restored at the Contractor's expense. The facilities shall be replaced or restored to a condition as good as when the Contractor entered upon the Work Site, or as good as required by the Contract Documents if any such objects are part of the Work. The City may make or cause to be made such temporary repairs as are necessary to restore to service any damaged facility. The cost of such repairs shall be borne by the Contractor, and the costs may be deducted from any monies due or to become due to the Contractor under the Agreement.

The fact that any underground facilities is not shown on the Contract Drawings shall not relieve the Contractor of its responsibility pursuant to "Utility Facilities" in Section 2-1.12 elsewhere in the Contract Documents. It shall be the Contractor's responsibility, pursuant thereto, to ascertain the location of such underground improvements or facilities, which may be subject to damage by reason of its operations.

Full compensation for furnishing all labor, materials, tools, equipment and incidentals, and for doing all the Work involved in protecting or repairing property as specified in this section, shall be considered as included in the prices paid for the various Contract items of work and no additional compensation will be allowed therefor.

5-1.10 **EMERGENCIES.** In an Emergency affecting the safety of life, the

Work, or adjoining property, the Contractor, without special instructions or authorization from the City, shall act at its discretion to prevent such threatened loss or injury. In such an Emergency, the Contractor may perform such additional work as is reasonably required. Any compensation claimed by the Contractor on account of Work performed to an Emergency shall be determined in accordance with the provisions relating to Force Account payment contained elsewhere in the Contract Documents.

5-1.11 **APPRENTICES.** Attention is directed to Labor Code Sections 1777.5, 1777.6 and 1777.7 and Title 8, California Code of Regulations Section 200 et seq. In accordance with Section 1777.5, the Contractor shall secure the necessary certificates and shall contribute to the apprenticeship fund or funds, a provided therein. The Contractor shall require each Subcontractor who will perform work or labor or render service to the Contractor in or about the construction of the work to fully comply with Sections 1777.5 and 1777.6 of the Labor Code. To insure compliance and complete understanding of the law regarding apprentices, and specifically the required ratio thereunder, each Contractor or Subcontractor should, where some questions exist, contact the Division of Apprenticeship Standards, , or one of its branch offices prior to commencement of Work on the public works Contract. Responsibility for compliance with this section lies with the prime Contractor.

It is State and City policy to encourage the employment and training of apprentices on public works Contracts as may be permitted under local apprenticeship standards.

5-1.12 **FAIR LABOR STANDARDS ACT.** Attention is invited to the fact that the City has been advised by the Wage and Hour Division, U.S. Department of Labor, that Contractors engaged in construction Work are required to meet the provisions of the Fair Labor Standards Act of 1958 and as amended (52 Stat. 1060).

5-1.13 **WORKERS' COMPENSATION.** Pursuant to the requirements of Labor Code Section 1860, the Contractor will be required to secure the payment of workers' compensation to its employees in accordance with the provisions of Labor Code Section 3700.

Prior to the commencement of Work, the Contractor shall sign and file with the Director a certification in the following form:

> "I am aware of the provisions of Labor Code Section 3700 which require every employer to be insured against liability for workers' compensation or to undertake self-insurance in accordance with the provisions of that code, and I will comply with such provisions before commencing the performance of the Work of this Contract."

5-1.14 **AIR POLLUTION CONTROL AND ASBESTOS.** The Contractor shall comply with all air pollution control rules, regulations, ordinances and statutes which apply to any Work performed pursuant to the Contract, including any air pollution control rules, regulations, ordinances and statues, specified in Government Code Section 11017.

In the absence of any applicable air pollution control rules, regulations, ordinances or statutes governing solvents, all solvents, including but not limited to the solvent portions of paints, thinners, curing compounds, and liquid asphalt used on the project shall comply with the applicable material requirements of the applicable Air Quality Management District. All containers of solvent, paint, thinner, curing compound, or liquid asphalt shall be labeled to indicate that the contents fully comply with said requirements.

Unless otherwise provided in the Supplemental Conditions, material to be disposed of shall not be burned, either inside or outside the Premises.

The Contractor shall also comply with all rules, regulations, statutes and ordinances

regarding asbestos removal and disposal, including but not limited to, 42 U.S.C. Sections 7401, 7412 and 7601, 40 C.F.R. Part 61, Subpart M, and California Code of Regulations Section 1529, Title 8.

If the Contractor discovers that a building to be demolished or renovated contains asbestos containing material, the Contractor shall immediately cease Work and notify the City.

5-1.15 **USE OF PESTICIDES.** The Contractor shall comply with all local, state and federal rules and regulations of the Department of Food and Agriculture, the Department of Health, the Department of Industrial Relations and all other agencies which govern the use of pesticides required in the performance of the Work.

Pesticides shall include but shall not be limited to herbicides, insecticides, fungicides, rodenticides, germicides, nematocides, bactericides, inhibitors, fumigants, defoliants, desiccants, soil sterilants, and repellents.

Any substance or mixture of substances intended for preventing, repelling, mitigating, or destroying weed, insects, diseases, rodents, or nematodes and any substance or mixture of substances intended for use as a plant regulator, defoliant or desiccant shall be considered as pesticide.

5-1.16 **SOUND AND LIGHT CONTROL REQUIREMENTS.** The Contractor shall comply with all local sound control, light control, and noise level rules, regulations and ordinances which apply to any Work performed pursuant to the Contract. Work shall not begin before 7 a.m. nor occur after 7 p.m., unless otherwise permitted by the City.

Each internal combustion engine, used for any purpose on the Work or related to the Work, shall be equipped with a muffler, in good working order, of a type recommended by the manufacturer. No internal combustion engine shall be operated on the project without said

muffler.

5-1.17 **WEIGHT LIMITATIONS.** Unless expressly permitted elsewhere in the Contract Documents, the Contractor shall not operate construction equipment or vehicles of any kind which, laden or unladen, exceed the maximum weight limits set forth in Division 15 of the Vehicle Code over completed or existing base, surfacing, pavement or structures.

XVIII. 5-1.18 **ENVIRONMENTAL CLEARANCES; MITIGATION MONITORING PROGRAMS; AND REGULATORY AGENCY PERMIT REQUIREMENTS.** The Department will obtain all environmental clearances and other authorizations necessary for this project as set forth in the Contract Documents. The Contractor shall comply with the provisions, including giving notices during construction when required, of said authorizations. In the event the obtaining of said authorizations delays completion of all or any portion of the Work, an extension of time determined pursuant to the provisions in Section 6-1.08, "Liquidated Damages," of these General Conditions will be granted.

Contractor shall comply with: (1) all mitigation identified in the mitigation monitoring program (attached to and adopted as a component of the mitigated negative declaration or Environmental Impact Report) to mitigate impacts to protected natural resources; and (2) all related permit requirements issued by the regulatory agencies authorizing the project. Contractor shall defend, indemnify, and save and hold harmless the City, its officers, agents, employees, and volunteers from any fines, claims, suits, actions or regulatory sanctions of every name, kind and description brought forth, or on account of, damage to protected natural resources from or arising out of Contractor's negligence or willful misconduct in the performance of this Agreement.

5-1.19 **PERMITS AND LICENSES.** The Contractor acknowledges and agrees that, prior to the submission of its bid for the Work, it fully familiarized itself with the

requirements of all applicable federal, state, county and municipal laws, codes, rules, and regulations, as well as the conditions of any required licenses and permits.

The Contractor shall procure all permits and licenses, including any applicable building permits (except those procured or to be procured by the City which are listed elsewhere in the Contract Documents), in coordination with the Director, pay all charges and fees, and give all notices necessary and incident to the due and lawful prosecution of the Work. Contractor shall be responsible for applying, paying all fees, and coordination for obtaining all permits for completion of the Work. All permits and licenses shall be obtained in sufficient time to prevent delays to the Work. Contractor will apply to the City for reimbursement for such permits costs. Accordingly, Contractor should not include the anticipated costs for permits in its bid, as the necessary permit costs will be reimbursed by the City.

The California Environmental Quality Act (Public Resources Code, Section 21000 to 21177) may be applicable to permits, licenses and other authorizations which the Contractor must obtain from State or local agencies in connection with performing the Work. The Contractor shall comply with the provisions of that Act in obtaining such permits, licenses and other authorizations, and all permits, licenses and other authorizations shall be obtained in sufficient time to prevent delays to the Work.

The Contractor shall maintain the applicable Contractor's license as identified in the Notice to Contractors and City business license for the duration of the Work.

5-1.20 **WATER POLLUTION.** The Contractor shall comply with all water pollution control rules, regulations, ordinances and statutes which apply to any Work performed pursuant to the Contract, including any water pollution control rules, regulations, and statutes, specified by the most current State of California NPDES General Permit for Stormwater

Discharges Associated with Construction Activity.

The Contractor shall take all necessary precaution to protect streams, vernal pools, ponds, reservoirs, and lakes from pollution with fuels, oils, bitumen, calcium chloride, and other harmful materials as consistent with the law. Also, the Contractor shall conduct and schedule operations so as to avoid discharging pollutants, such as but not limited to: sediment and silt to the storm drain system. The storm drain system consists of all facilities that are designed to convey stormwater to the Waters of the State as defined in the California Water Code. The storm drain system includes, but is not limited to, all streets, gutters, drain inlets, roadside ditches, streams, vernal pools, ponds, and lakes. Care shall be exercised to preserve roadside vegetation beyond the limits of construction.

5-1.21 **PROTECTION AND USE OF PROPERTY.** The Contractor shall be responsible for and provide and maintain all proper temporary walkways, covered walkways, barriers, roads, guards, railings, lights, warning signs, and take precaution at all times to avoid injury or damage to any person or any property, and upon completion of the Work, or at other times as directed, restore Premises and adjacent property to a proper condition. In the event of such injury or damage, Contractor shall report such injury and damage to City within forty-eight (48) hours of occurrence.

The Contractor shall protect adjoining property and nearby buildings, including City buildings, City roads, and public streets or roads, from dust, dirt, debris, or the nuisance arising out of the Contractor's operations or storage practices, and, if ordered by the Director, the Contractor shall provide and Install suitable safeguards, approved by the Director, to protect such objects from damage. If such objects are damaged by reason of the Contractor's operations, they shall be replaced or restored at the Contractor's expense.

If the Contractor damages any buildings, roads, utilities, or other property which belong to the City, or any Department or agency thereof, then the Director, at his or her option, may retain from the money due under the Contract an amount sufficient to insure repair of the damage.

The Director may make or cause to be made such temporary repairs as are necessary to restore to service any such damaged facility. The cost of such repairs shall be borne by the Contractor and may be deducted from any moneys due or to become due the Contractor under the Contract.

5-1.22 **RESPONSIBILITY FOR DAMAGE AND INDEMNIFICATION.**

The City of Roseville, its officers, agents, employees, and volunteers, including but not limited to the Director and his or her designee, shall not be answerable or accountable in any manner: for any loss or damage that may happen to the Work or any part thereof; for any loss or damage to any of the materials or other things used or employed in performing the Work; for injury to or death of any person, either workers or the public; or for damage to property from any cause which might have been prevented by the Contractor, its workers, or anyone employed by the Contractor or the Contractor's Subcontractors.

The Contractor shall be responsible for any liability imposed by law and for injuries to, or death of, any person including, but not limited to, workers and the public, or damage to property resulting from defects or obstructions, or from any cause whatsoever during the progress of the Work or at any time before its completion and final Acceptance.

To the fullest extent allowed by law, the Contractor shall defend (through counsel acceptable to the City), indemnify, and save and hold harmless the City, and its respective officers, agents, Subcontractors, employees, and volunteers, and the successors and assigns of

any of them, (hereinafter referred to as "Indemnitees") from and against all claims, demands, liability, suits, actions, costs or expenses for any and all loss or damage, including but not limited to, personal injury, property damage, or economic loss, arising out of or resulting from allegations of (1) Contractor's use of the City's property or any activities or Work performed hereunder by the Contractor; (2) the Contractor's performance of the Work under the Agreement; or (3) the Contractor's breach of any provision of the Agreement. The duty of the Contractor to indemnify and save harmless includes the duties to defend as set forth in Civil Code Section 2778. The only exception to these provisions is that the Contractor's obligations under this section will not apply to the extent that the claims, demands, liability, suits, actions, costs or expenses are caused by Indemnitees' active negligence, willful misconduct, criminal acts, or for defects in design furnished by the Indemnitees, misconduct, criminal acts, or for defects in design furnished by the Indemnitees.

The Contractor waives any and all rights to any type of express or implied indemnity against the City, its officers, agents, employees, or volunteers.

The Contractor's responsibility for such defense and indemnity obligations shall survive the termination or completion of this Contract for the full period of time allowed by law. The defense and indemnity obligations of this Contract are undertaken in addition to, and shall not in any way be limited by, the insurance obligations contained in this Contract. The parties intend that the defense and indemnity obligations in this Contract shall be broadly construed.

Any person, firm or corporation that Contractor authorizes to Work on the City's property including Subcontractors, shall be deemed to be an agent of the Contractor for purposes herein, shall be subject to all the applicable terms herein, and shall be within the scope of the Contractor's indemnity obligation described herein.

In addition to any remedy authorized by law, so much of the money due the Contractor under and by virtue of the Contract as shall be considered necessary by the Department may be retained by the City until disposition has been made of such suits or claims for damages.

The retention of money due the Contractor shall be subject to the following:

A. The City will give the Contractor thirty (30) Days' notice of its intention to retain funds from any partial payment which may become due to the Contractor prior to Acceptance of the Contract. Retention of funds from any payment made after Acceptance of the Contract may be made without such prior notice to the Contractor.

B. No retention of additional amounts out of partial payments will be made if the amount to be retained does not exceed the amount being withheld from partial payments pursuant to Section 7-1.07, "Progress Payments," of these General Conditions.

C. If the City has retained funds and it is subsequently determined that the City is not entitled to be indemnified and saved harmless by the Contractor in connection with matter for which such retention was made, the Department shall be liable for interest on the amount retained at the legal rate of interest for the period of such retention.

5-1.23 **INSURANCE COVERAGE.**

A. Evidence of Maintenance Required. The Contractor shall, at its expense, procure and at all times maintain in full force and effect at a minimum the insurance required by this section on all of its operations; and the Contractor shall not allow any Subcontractor to commence work until similar insurance required of the Subcontractor has been obtained and filed. An original Certificate of Insurance, and copies of all required endorsements, all in a form approved by the Risk Manager, evidencing all required coverage or policies shall be filed after the award of the bid and prior to approval of the Contract by the City Council. Contractor shall

provide ten (10) days prior written notice to the City of any reduction of coverage limits or cancellation of the coverage or policies shall be given to the City of Roseville as Certificate holder.

B. Qualifying Insurers. With the exception of the State Compensation Insurance Fund, all required insurance policies shall be issued by companies acceptable to the City and licensed to do business in the State of California and who hold a current policy holders alphabetic and financial size category rating of not less than AVII according to the most recent issue of Best's Insurance Reports.

C. Insurance Required.

1. Commercial General Liability (CGL): Insurance Services Office Form CG 00 01 covering CGL on an "occurrence" basis, including products and completed operations with limits of no less than Two Million Dollars ($2,000,000) per occurrence for bodily injury, personal injury and property damage for projects under One Million Dollars ($1,000,000) and limits of no less than Five Million Dollars ($5,000,000) per occurrence for bodily injury, personal injury and property damage for projects over One Million Dollars ($1,000,000). If a general aggregate limit applies, either the aggregate limit shall apply separately to this project or the general aggregate limit shall be twice the required occurrence limit.

The Commercial General Liability insurance shall include the following, copies of which shall be provided:

a. Inclusion of the City of Roseville, and its officers, agents, employees, and volunteers, as additional insureds (except for workers' compensation) as respects services or operations under the Contract. The additional insured endorsement for the general liability policy shall be at least as broad as the ISO CG 2010 10 01 combined with ISO CGL

Endorsement CG 2037 10 01. Any other endorsement must be approved in writing by the City. Endorsements must include coverage for on-going and completed operations, which coverage shall be maintained for four (4) years following completion of the Project. Endorsements shall cover the City of Roseville, its officers, agents, employees, and volunteers.

b. The insurance shall provide coverage for claims by one insured against another insured and the policies shall not contain any cross-suits exclusions, cross-liability exclusions, or insured versus insured exclusions. The policies shall not contain any classification exclusions purporting to deny coverage for any work to be performed by Contractor or any of its Subcontractors.

c. Stipulation that the insurance is primary and noncontributory, as evidenced by a separate endorsement (CG 20 01 04 13 or an equivalent) or section of the policy, and that neither the City nor its insurers will be called upon to contribute to a loss.

d. Such insurance shall specifically cover the contractual liability of the Contractor.

e. Any available insurance proceeds in excess of the specified minimum insurance coverage requirements and limits shall be available to the additional insureds. Furthermore, the requirements for coverage and limits shall be: (1) the minimum coverage and limits specified in this Agreement; or (2) the full coverage and maximum limits of any insurance proceeds available to the named insureds, whichever is greater.

f. Waiver of subrogation endorsement.

g. The Contractor shall furnish a certificate for the period covered.

2. Automobile Liability: Insurance Services Office Form Number CA 0001 covering Code 1 (any auto), or if Contractor has no owned autos, Code 8 (hired) and Code 9

(non-owned), with limits of no less than One Million Dollars ($1,000,000) per accident for bodily injury and property damage.

3. Workers' Compensation: In accordance with the provisions of the California Labor Code, Contractor is required to be insured against liability for Workers' Compensation or to undertake self-insurance. Statutory Workers' Compensation and Employers' Liability of at least One Million Dollars ($1,000,000) shall cover all Contractors staff while performing any work incidental to the performance or this Agreement.

4. Professional Liability: Professional Liability (Errors and Omission) Insurance appropriate to Contractor's profession, with a limit of liability not less than One Million Dollars ($1,000,000) per occurrence or claim and Two Million Dollars ($2,000,000) aggregate to cover all design and engineering services rendered by Contractor pursuant to the Agreement. Coverage must commence from the first day that Contractor or any of its Subcontractors provided any design or engineering services in connection with the Project.

5. Builder's Risk/Course of Construction Insurance (If Required by Risk Management): The Contractor shall be responsible for all loss, damage or destruction whatsoever to the work called for by this Contract until the approval of a Notice of Completion or acceptance of the Work if no Notice of Completion is to be recorded.

The Contractor shall secure "All Risk" type of builder's Risk Insurance of the type covering one hundred percent (100%) of the value of the work performed under this Contract (the value is presumed to be the Contract amount unless otherwise stated in Supplemental Conditions) and all materials, equipment, or other items to be incorporated therein while the same are located at the construction site, a bonded warehouse, or its place of manufacture. At any time, the policy shall cover the value of the work completed. The policy shall cover hazards

including the losses due to fire, explosion, hail, rain, lightning, flood (separate insurance as needed), vandalism, malicious mischief, wind, collapse, aircraft, and smoke.

The policies providing such insurance shall name the City as a loss payee as its respective interests may appear, and certified copies of such policies shall be filed with the City. The maximum deductible allowable under the Builder's All Risk policy shall be five percent (5%) of the Contract amount.

Builder's Risk Insurance is not required for coverage of losses in excess of five percent (5%) of the Contract amount for damages resulting from earthquake in excess of a magnitude of 3.5 on the Richter scale, or tidal waves. Coverage in the amount of five percent (5%) of the Contract amount for such losses is required.

6. Pollution Coverage: Contractor shall procure pollution liability coverage or other insurance covering claims for bodily injury or property damage arising out of the abatement, removal, storage, transportation, or other exposure to hazardous materials or pollutants, in limits not less than Two Million Dollars ($2,000,000). Contractor shall add the City and all parties required to be indemnified by Contractor as additional insured on all pollution liability policies.

7. Higher Coverage Limits: If Contractor maintains higher coverage limits than the amounts shown above, then the City requires and shall be entitled to coverage for the higher coverage limits maintained by Contractor. Any available insurance proceeds in excess of the specified minimum limits of insurance and coverage shall be available to the City.

8. Claims Made Coverage: Liability insurance coverage may not be written on a “claims made” or modified occurrence basis. The Certificate of Insurance must clearly provide that the coverage is on an “occurrence” basis.

5-1.24 **OTHER INSURANCE PROVISIONS.**

A. The requirements of the Standard Specifications as to types and limits of insurance coverage to be maintained by the Contractor, and any approval of insurance by the City, are not intended to, and shall not in any manner limit or qualify the liabilities and obligations otherwise assumed by the Contractor pursuant to the Contract, including, but not limited to, the provisions concerning indemnification, nor preclude the City from taking any other action available to it under any other provision of the Contract or law.

B. The City acknowledges that some insurance requirements contained in these Standard Specifications may be fulfilled by self-insurance on the part of the Contractor. However, this shall not in any way limit liabilities assumed by Contractor under the Contract. Any self-insurance must be approved in writing by the City, in its sole discretion and shall not reduce the limits of liability. Any deductibles or self-insured retentions ("SIR") must be declared on the certificate of insurance and approved by City in writing. Policies containing any SIR provision shall provide or be endorsed to provide that the SIR may be satisfied by either the named insured or City. City reserves the right to obtain a full certified copy of any insurance policy and endorsements. The failure to exercise this right shall not constitute a waiver of such right.

C. The Contractor agrees to include in its contracts with all subcontractors the same requirements and provisions of this Contract, including the indemnity and insurance requirements, to the extent they apply to the scope of the subcontractor's work. Furthermore, the Contractor shall require its subcontractors to agree to be bound to the Contractor and the City in the same manner and to the same extent as the Contractor is bound to the City under this Contract. Additionally, the Contractor shall obligate its subcontractors to comply with these

same provisions with respect to any tertiary subcontractor, regardless of tier. A copy of the City's indemnity and insurance provisions will be furnished to the subcontractor or tertiary subcontractor upon request. Alternatively, the Contractor may insure subcontractor(s) under its own policy.

D. The City, its officers, agents, employees, and volunteers are to be covered as insureds with respect to liability arising out of automobiles owned, leased, hired or borrowed by or on behalf of the Contractor; and with respect to liability arising out of work or operations performed by or on behalf of the Contractor including materials, parts or equipment furnished in connection with such work or operations. Coverage shall not extend to any indemnity coverage for the active negligence of the additional insured in any case where an agreement to indemnify the additional insured would be invalid under California Insurance Code Section 11580.04.

E. The limits of insurance required in this Contract may be satisfied by a combination of primary and excess insurance. Any excess insurance shall contain or be endorsed to contain a provision that such coverage shall also apply on a primary and noncontributory basis for the benefit of the City (if agreed to in a written contract) before the City's own insurance shall be called upon to protect it as a named insured.

F. The insurance procured by Contractor shall be subject to the approval of the City, but any acceptance of insurance certificates by the City shall in no way limit or relieve Contractor of its duties and responsibilities under the Agreement.

G. Contractor shall be responsible for all premiums, deductibles, and self-insured retention applicable to the insurance it is required to procure under the Contract. All deductibles or self-insured retentions over five hundred thousand dollars ($500,000) must be approved by the City, in writing. Contractor shall be responsible for all deductibles, self-insured

retention payments, and/or increased premiums incurred if the City's policies of insurance are forced to cover damages or respond to claims for which Contractor or its Subcontractors were obligated to provide insurance under the Contract.

H. Failure of the City to enforce in a timely manner any of the requirements of these insurance provisions shall not act as a waiver to enforcement of any of these provisions at a later date.

I. Contractor's indemnity obligations shall not be limited by these insurance provisions and shall survive the expiration of the Contract and the insurance provisions of the Contract shall likewise not be limited by the indemnity provisions of the Contract.

J. THE CITY RESERVES THE RIGHT TO WITHHOLD ANY PROGRESS PAYMENTS TO THE CONTRACTOR IN THE EVENT OF NONCOMPLIANCE WITH ANY INSURANCE REQUIREMENTS.

5-1.25 **THIRD PARTY BENEFICIARY.** No provisions in the Contract Documents shall in any way inure to the benefit any third party (including the public at large or any member thereof) so as to constitute such person a third party beneficiary of the Contract, or of any term or condition or other provision of the Contract or otherwise give rise to any cause of action in any person not a party to the Agreement, except as expressly provided elsewhere in the Contract Documents.

5-1.26 **COORDINATION AND ACCESS.** The Contractor acknowledges that the City may award, or has already awarded, other construction contracts for additional work or may perform additional work with its own forces and that such work may affect the Work under this Agreement. Additionally, the Contractor acknowledges that the State and other public and private agencies may be granted a right-of-entry by the City for the purpose of constructing

facilities within and adjacent to the Work Site. It is the obligation of the Contractor to coordinate its Work with the work of others working within or adjacent to the City's property.

During performance of its Work, the Contractor shall not have exclusive access to or use of the work areas. The City may also require that certain facilities and areas be used concurrently by the Contractor and by other contractors working in the area. When two (2) or more contractors are employed on related or adjacent City work, each shall conduct its operations in such a manner as not to cause any unnecessary delay or hindrance to the other. Each contractor shall be responsible to the other for all damage to any work, to persons or property caused to the other by its operations, and for loss caused the other due to any unnecessary delays or failure to finish the work within the time specified for completion.

If any party of the Contractor's Work depends on the work of any other contractor and/or the City for proper execution and/or results, the Contractor shall promptly notify the City of any discrepancies and/or defects in said other work that would render its work unsuitable for proper execution and/or results prior to proceeding with the Contractor's own Work. If it becomes necessary, the City will resolve coordination and access problems.

The Contractor and its representative in charge of the Work shall familiarize themselves with the City's property and Work Site, and adjacent surroundings in the vicinity of said Wok, and any private or public operations on adjoining properties.

XIX. 5-1.27 **OCCUPANCY BY THE DEPARTMENT PRIOR TO ACCEPTANCE.** The City may at any time notify the Contractor in writing that it intends to take Beneficial Occupancy of any portion of the Work even though the Work may not be substantially complete. Unless the reason for the City's taking Beneficial Occupancy is that the Contractor has not completed the Work (or portions thereof) in accordance with the Contract

Time, the City's Beneficial Occupancy shall relieve the Contractor from its responsibility for maintenance, loss or damage to that portion of the Work for which the City has taken Beneficial Occupancy other than that resulting from the Contractor's act or omission, negligence, willful misconduct or breach of warranty.

Should the Work (or portion thereof) not be completed in accordance with the Construction Schedule within the Contract Time (as adjusted under the terms of the Contract Documents), the City shall have the right, but not the obligation, to take Beneficial Occupancy of the Work. In such event, the Contractor shall not be entitled to any additional compensation on account of said occupancy by the City, nor shall the Contractor be relieved of any of its responsibilities under the Contract Documents, including, without limitation, Contractor's obligation to complete the Work in accordance with the Construction Schedule.

Beneficial Occupancy shall not be deemed an Acceptance by the City either of the Work or of any portion thereof, nor will it relieve the Contractor of full responsibility for correcting defective Work or materials found at any time before the formal written Acceptance of the entire Contract by the Director or during the full warranty period after such Acceptance, as provided in Section 7-1.12, "Warranty," of these General Conditions.

The City's Beneficial Occupancy shall not relieve the Contractor of its responsibility to maintain all insurance and bonds required under the Contract Documents until the entire project is accepted by the City.

5-1.28 **RIGHT TO OPERATE UNSATISFACTORY FACILITIES AND EQUIPMENT.** If, after Installation, the operation or use of the facilities or equipment to be furnished under this Contract proves to be unsatisfactory to the Director, the City shall have the right to operate and use such facilities or equipment until they can, without damage to the City,

be taken out of service for correction or replacement. Such period of use of the defective facilities or equipment, pending correction or replacement, shall in no way decrease the warranty period required for the acceptable corrected or replaced facilities or equipment.

5-1.29 **CONTRACTOR'S RESPONSIBILITY FOR THE WORK.** Except as otherwise provided herein, the Contractor shall have the charge and care of the Work and shall bear the risk of injury or damage to any part of the Work by the action of the elements or from any other cause whether arising from the execution or from the nonexecution of the Work until the Acceptance of the Contract by the Director. The Contractor shall rebuild, repair, restore, and make good all injuries or damages to any portion of the Work occasioned by any cause before its completion and Acceptance, and shall bear the expense thereof. In case of suspension of Work from any cause whatever, the Contractor shall be responsible for the Work and it shall also be responsible for all materials, and shall properly store them if necessary, and shall provide suitable drainage and erect temporary structures where necessary.

The Contractor will be relieved of responsibility for any injury or damage to the Work caused by the following:

A. An earthquake in excess of a magnitude of 3.5 on the Richter Scale or a tidal wave, when the effect of such has been proclaimed a disaster or state of emergency by the Governor of the State of California or by the President of the United States, or was of such magnitude at the site of the Work as to have been sufficient to have caused a proclamation of disaster or state of emergency, had it occurred in a populated area.

B. Occupancy and use by the Department or the public prior to the completion of the entire project.

C. Acts of the Federal Government or the public enemy.

5-1.30 **RESPONSIBILITY FOR UTILITIES.** The Contractor shall be responsible at its own cost for any and all Work, expense or special precautions caused or required by the existence or proximity of utilities encountered in performing the Work, including without limitation, repair of any or all damage and all hand or exploratory excavation required. The Contractor is cautioned that such utilities may include communication cables or electrical cables which may be high voltage, and when working or excavating in the vicinity of such cables, or the ducts enclosing such cables, the Contractor shall undertake at its own cost any special precautions required. Suitable warning signs, barricades, and safety devices shall be erected as necessary or required.

However, if during the course of the Work the Contractor encounters utility Installations which are not shown or indicated in the Contract Documents or which are found in a location substantially different from that shown, and such utilities are not reasonably apparent from visual examination, then the Contractor shall promptly notify the Director in writing. Where necessary for the Work of the Contract, the Director shall issue a written order to the Contractor to make such adjustments, rearrangement, repair, removal, alteration, or special handling of such utility, including repair of the damaged utility. The Contractor shall perform the Work described in such written order, and compensation therefor will be made in accordance with Section 3 of these General Conditions relating to changes in the Work. Except for the items of cost specified in said Section 3, the Contractor shall receive no compensation for any other cost, damage, delay, interference, or hindrance to him or her due to the presence of such utility. If the Contractor fails to give the notice specified above and thereafter acts without instructions for the Director, then the Contractor shall be liable for any or subsequent to discovery thereof, and the Contractor shall repair and make good such damage at its own cost.

The precise location of underground facilities can only be determined by careful probing or hand digging in compliance with Article 6 of the Cal/OSHA Construction Safety Orders which states in part:

> "Prior to opening an excavation, effort shall be made to determine whether underground installations, i.e., sewer, water, fuel, electric lines, etc., will be encountered, and if so, where such underground installations are located. When the excavation approaches the approximate location of such an installation, the exact location shall be determined by careful probing or hand digging, and, when it is uncovered, adequate protection shall be provided for the existing installation."

The location of known existing utilities and pipelines are shown on the Contract Drawings in their approximate locations. Some of the locations include multiple conduits. The Contractor shall exercise care in avoiding damage to those facilities which are to remain in service subsequent to the construction of the particular new facility involved and the Contractor will be held responsible for any repairs if damaged. The Contractor shall also exercise care in maintaining those pipes and facilities required for continuing operation of the existing facilities until such time as they can be abandoned. There is no guarantee that all utilities or obstructions are shown on the Contract Drawings or that the locations indicated are accurate.

The Contractor shall exercise extreme caution in working in the area adjacent to the existing pipelines and utility services. It is essential that all the existing facilities be maintained in service. Construction of the connections between the existing facilities and the new facilities shall be at times and during periods acceptable to the City. The Contractor shall advise the Director in writing of its proposed Construction Schedule for these connections at least forty-eight (48) hours in advance.

The Contractor shall uncover all piping and conduits, to a point one foot (1') below the pipe, where crossings, interferences, or connections are shown on the Contract Drawings, prior to trenching or excavating for any pipe or structures, to determine actual elevations. New pipelines shall be laid to such grade as to clear all existing facilities which are to remain in service. If the Contractor does not expose all required utilities, it shall not be entitled to additional compensation for Work necessary to avoid interferences nor for repair to damaged utilities. Excavations around underground electrical ducts and conduits shall be performed using extreme caution to prevent injury or damage to workers and to the electrical ducts or conduits.

5-1.31 **PROPERTY RIGHTS IN MATERIALS.** Nothing in the Contract shall be construed as vesting in the Contractor any right of property in the materials used after they have been attached or affixed to the Work or soil or after partial payment has been made as provided in Section 7-1.07, "Progress Payments," of these General Conditions for material delivered on the ground or stored subject to or under the control of the City and unused. All such material shall become the property of the City upon being so attached or affixed or upon payment for materials delivered on the ground or stored subject to or under the control of the City and unused, as provided in said Section 7-1.07.

5-1.32 **COURT ORDERED DELAY.** If, pursuant to court order, the Department temporarily suspends performance of all or any portion of the Work, an extension of time determined pursuant to the provisions in Section 6-1.08, "Liquidated Damages," of these General Conditions will be granted.

5-1.33 **NO PERSONAL LIABILITY.** Neither the Director, nor any other officer or authorized employee of the City, shall be personally responsible for any liability arising under or by virtue of the Contract.

5-1.34 **RIGHTS IN LAND AND IMPROVEMENTS.** The Contractor shall make no arrangements with any person or entity to permit occupancy or use of any land, structure or building within the limits of the Work, for any purpose whatsoever, either with or without compensation, in conflict with any agreement between the City and any third party owner, former owner, or tenant of such land, structure or buildings. The Contractor shall not occupy City-owned property outside the limit of the Work shown on the Contract Drawings unless it obtains prior approval.

5-1.35 **ANTITRUST CLAIMS.** The Contractor's attention is directed to the following provision of Public Contract Code Section 7103.5(b), which is applicable to the Contractor and its Subcontractors:

> " In entering into a public works contract or a subcontract to supply goods, services, or materials pursuant to a public works contract, the contractor or subcontractor offers and agrees to assign to the awarding body all rights, title, and interest in and to all causes of action it may have under Section 4 of the Clayton Act (15 U.S.C. Sec. 15) or under the Cartwright Act (Chapter 2 [commencing with Section 16700] of Part 2 of Division 7 of the Business and Professions Code), arising from purchases of goods, services, or materials pursuant to the public works contract or the subcontract. This assignment shall be made and become effective at the time the awarding body tenders final payment to the contractor, without further acknowledgement by the parties."

XX. 5-1.36 **RIGHTS TO DRAWINGS, TECHNICAL DATA PATENTS.** Shop

Drawings and Working Drawings submitted to the City by the Contractor, Subcontractor or any lower tier Subcontractor pursuant to the Agreement, are the property of the City and the City may use, and disclose in any manner and for any purpose, Shop Drawings and Working Drawings delivered under the Contract.

Technical Data including manuals or instructional materials, computer or microprocessor software which are delivered or submitted to the City by the Contractor, Subcontractor, or any lower tier Subcontract pursuant to the Contract are the property of the City, and the City may use or disclose same in any manner and for any purpose.

The Contractor shall assume all costs arising from the use of patented materials, equipment, devices, or processes used on or incorporated in the Work, and shall defend, indemnify and save and hold harmless the City, and its duly authorized representatives, from all suits at law, or in equity, and actions of every nature for, or on account of the use of any patented materials, equipment, devices or processes. In case some materials, equipment, devices or processes are held to constitute an infringement and their use enjoined, the Contractor, at its expense, shall:

1. Secure for the City the right to continue using said materials, equipment, devices or processes by suspension of the injunction or by procuring a license or licenses; or
2. Replace such materials, equipment, devices, processes; or
3. Modify them so that they become non-infringing or remove the enjoined materials, equipment, devices or processes and refund the sums paid therefor without prejudice to any other rights of the City.

5-1.37 **PAYMENT OF TAXES.** Contractor shall pay all taxes and duties applicable to and assessable against any Work, equipment, materials, services, processes, and

operations incidental to or involved in the Agreement, including but not limited to, retail sales and use, transportation, export, import, business, and special taxes. The Contractor is responsible for ascertaining and acquainting itself with such taxes and making all necessary arrangements to pay them. The Contractor will maintain records that are auditable records, and these records shall be subject to the City's review to verify that Contractor's tax payments are current at all times.

The Contract Price paid for the Work shall include full compensation for all taxes which the Contractor is required to pay, whether imposed by Federal, State or local government, including, without being limited to, Federal excise tax. No tax exemption certificate nor any document designed to exempt the Contractor from payment of any tax will be furnished to the Contractor by the Department, as to any tax on labor, services, materials, transportation, or any other items furnished pursuant to the Contract.

The Contractor shall withhold and pay any and all sales and use taxes, withholding taxes, whether Federal, State, or local, Social Security taxes, State Unemployment Insurance charges and all other taxes which are now or hereafter may be required to be paid or withheld under any laws.

5-1.38 **GRATUITIES AND CONFLICT OF INTEREST.** The Contractor shall not offer or provide gratuities in the form of gifts, entertainment, loans, meals, rewards, and/or services to representatives of the City, including but not limited to, officers, employees, agents, Engineering Service Consultants, Consulting Engineers and Architects, Inspectors and/or Testing Agencies retained by the City. If it is found that the Contractor has violated this provision, the Contract may be subject to termination for default as defined elsewhere in these General Conditions.

During the term of the Contract and until the final payment has been made to the Contractor, the Contractor shall not employ or compensate in any manner whatsoever, the City's officers, employees and authorized representatives, agents, and any Engineering Service Consultants, Consulting Engineers and Architects, Inspectors, and/or Testing Agencies retained by the City. Any exception to the employment or compensation to any of the above named parties must be made in writing by the City. If the Contractor offers or provides employment or compensation to those named above during the term of the Contract, the Contract may be subject to termination for default.

5-1.39 **COOPERATION.** Should construction be under way by City forces or other forces or by other Contractors within or adjacent to the limits of the Work or should Work of any other nature be under way by such forces within or adjacent to said limits, the Contractor shall cooperate with all such forces to the end that any delay, interference or hindrance to their Work will be avoided. The right is reserved to perform other or additional Work at or near the site at any time, by the use of such forces.

5-1.40 **DIGGING TRENCHES OR OTHER EXCAVATIONS.** In the event any work involves digging trenches or other excavations that extend deeper than four feet (4') below the surface, City and Contractor shall comply with the following:

A. The Contractor shall promptly, and before the following conditions are disturbed, notify City in writing of any:

1. Material that the Contractor believes may be material that is hazardous waste, as defined in Section 25117 of the Health and Safety Code, that is required to be removed to a Class I, Class II, or Class III disposal site in accordance with provisions of existing law.

2. Subsurface or latent physical conditions at the site differing from those made available to Contractor for inspection as provided in the project proposal.

3. Unknown physical conditions at the site of any unusual nature, different materially from those ordinarily encountered and generally recognized as inherent in Work of the character provided for in the Contract.

B. The City shall promptly investigate the conditions, and if it finds that the conditions do materially so differ, or do involve hazardous waste, and cause a decrease or increase in the Contractor's cost of, or the time required for, performance of any part of the Work shall issue a Change Order under the procedures described in the Contract.

C. In the event that a dispute arises between the City and the Contractor whether the conditions materially differ, or involve hazardous waste, or cause a decrease or increase in the Contractor's cost of, or time required for, performance of any part of the Work, the Contractor shall not be excused from any scheduled completion date provided for by the Contract, but shall proceed with all work to be performed under the Contract. The Contractor shall retain any and all rights provided either by contract or by law which pertain to the resolution of disputes and protests between the contracting parties. However, no claim of the Contractor under this clause shall be allowed unless the Contractor has given the notice required by this Section. No claim by the Contractor for an equitable adjustment hereunder shall be allowed if asserted after final payment under this Contract.

5-1.41 **CONTRACTOR REGISTRATION.** No contractor or subcontractor may work on a public works project unless registered with the Department of Industrial Relations pursuant to Labor Code section 1725.5. During the performance of this Contract, the Contractor and its subcontractors shall have a continuing legal obligation to maintain current

registration with the Department of Industrial Relations. The Contractor is hereby notified that this project is subject to compliance monitoring and enforcement by the Department of Industrial Relations.

5-1.42 **CITY OF ROSEVILLE ENCROACHMENT PERMITS AND RIGHTS-OF-WAY.** The Contractor need not obtain a separate encroachment permit from the City prior to construction within street rights-of-way or other City rights-of-way. Execution of the Contract by the City shall be deemed an encroachment permit for work required by the Contract within rights-of-way. All work shall conform to the rules and regulations of encroachment permits and shall be subject to the inspection and approval of the Director and City Engineer.

To the extent indicated in the Contract Drawings, the City will provide the rights-of-way over private lands or the site to enable the Contractor to perform its work. The Contractor shall be solely responsible for securing any additional rights-of-way desired by the Contractor. The City will not be a party to nor assume any liability for any separate agreements reached between the Contractor and any third parties with respect to these additional rights-of-way. The Contractor shall procure evidence that agreements are in place with said third parties before the Contractor uses those areas covered by the agreements. Any damage to such private lands caused by the Contractor's operations shall be the sole responsibility of the Contractor.

XXI. 5-1.43 **CALIFORNIA AIR RESOURCES BOARD REGULATIONS.** The Contractor shall comply with any applicable regulations of the California Air Resources Board ("CARB") set forth below.

A. In-Use Off-Road Diesel-Fueled Fleets. If the Contractor will use vehicles subject to Cal. Code Regs., tit. 13, §§ 2449 et seq. for the project, it shall submit a valid

Certificate of Reported Compliance to the City as provided in § 2449(n).

B. Advanced Clean Fleets. Pursuant to Cal. Code Regs., tit. 13, § 2013(i)(1), the Contractor shall submit to the City either a signed statement stating that it is not subject to the High Priority and Federal Fleets regulation of title 13, CCR section 2015 through 2015.6, or a document evidencing that it is listed on the CARB Advanced Clean Fleets webpage as a compliant fleet.

XXII. SECTION 6

PROSECUTION AND PROGRESS

6-1.01 **SUBLETTING AND SUBCONTRACTING.** The Contractor shall be responsible for all Work performed under the Contract. The Contractor shall give its personal attention to the fulfillment of the Contract and shall keep the Work under its control. Nothing in the Contract Documents shall create any contractual relationship between the City and any Subcontractor. The Contractor is fully responsible to the City for the acts and omissions of its Subcontractors of any tier. When any Subcontractor fails to prosecute a portion of the Work in a manner satisfactory to the Director, that Subcontractor shall not again be employed on the Work. Although the sections of the Contract may be arranged according to various trades, or general grouping of the Work, the Contractor is not obligated to sublet the Work in such manner. The Director will not arbitrate disputes among Subcontractors or between Contractor and one or more Subcontractors concerning responsibility for performing any part of the Work.

The on-site production of materials produced by other than the Contractor's own forces shall be considered as subcontracted. The erection, establishment or reopening of on-site plants for production of materials and the operation thereof in the production of materials for use on the Work shall conform to the requirements relating to labor set forth in the Contract Documents.

The Contractor shall also be responsible for coordinating the Work performed by Subcontractors and Suppliers.

The Contractor shall not substitute any person as Subcontractor in place of a Subcontractor listed on its bid proposal without the written approval of the Director. Substitutions must be in accordance with the provisions of the "Subletting and Subcontracting

Fair Practices Act" beginning with Public Contract Code Section 4100. Violations of this Act by the Contractor may subject it to penalties which may include cancellation of Contract, Assessment of ten percent (10%) of the Subcontractor's bid, and disciplinary action by the Contractors State License Board.

The Contractor shall pay any Subcontractors approved by the City for work that has been satisfactorily performed no later than seven (7) Days from the date of Contractor's receipt of progress payments by the City. Within seven (7) Days after receipt from the City of funds attributable to work performed by a Subcontractor, Contractor shall release any retainage payments withheld to the Subcontractor. In the event Contractor does not make progress payments or release retention to Subcontractors in accordance with the time period specified herein, Contractor may be subject to prompt payment penalties per statute.

6-1.02 **ASSIGNMENT.** The performance of this Contract may not be assigned, except upon the written consent of the City Council of the City of Roseville. Consent will not be given to any proposed assignment which would relieve the original Contractor or its surety of their responsibilities under the Contract nor will the City consent to any assignment of a part of the Work under the Contract.

The Contractor may assign moneys due or to become due to it under the Contract and such assignment will be recognized by the City, if given proper notice thereof, to the extent permitted by law, but any assignment of moneys shall be subject to all proper set-offs in favor of the City and to all deductions provided for in the Contract and particularly all money withheld, whether assigned or not, shall be subject to being used by the City for the completion of the Work in the event that the Contractor should be in default therein.

6-1.03 **BEGINNING OF WORK.** After the execution of the Contract by both

parties, the City will issue the Notice to Proceed upon its determination that it is appropriate for the Contract Time to commence.

The Contractor shall begin Work within fifteen (15) Days after receiving the Notice to Proceed from the Director, subject to the requirements stated elsewhere in the Contract Documents regarding, among other things, the submittal of Baseline Schedule, and shall diligently prosecute the same to completion within the time limit provided in the Supplemental Conditions. Contractor shall also achieve any and all Contract milestones as described elsewhere in the Contract Documents.

The Contractor shall notify the Director, in writing, of its intent to begin Work at least seventy-two (72) hours before Work is begun. The notice shall be delivered to the Director and shall specify the date the Contractor intends to start. If the project has more than one (1) location of Work, a separate notice shall be given for each location.

The Contractor is not authorized to perform any Work until it has received a Notice to Proceed from the City. Should the Contractor begin Work in advance of receiving notice that the Contract has been approved as above provided, any Work performed by it in advance of the said date of approval shall be considered as having been done by the Contractor at its own risk and as a volunteer unless said Contract is so approved thereafter.

6-1.04 **PROGRESS SCHEDULE.**

A. Preliminary Progress Schedule. The Contractor shall submit to the Director, within twenty (20) Days after date of the Notice to Proceed, a Preliminary Progress Schedule covering the Contractor's activities over the first three (3) months of operation in detail and the remainder of the project in summary. The Preliminary Progress Schedule shall schedule the project within the Contract Time for completion of the Work, and shall be subject to

favorable review by the Director.

B. CPM Schedule. The Contractor shall submit an acceptable Critical Path Method (CPM) Schedule to the Director within thirty (30) Days after the receipt of the Notice to Proceed. Subsequent revisions to said schedule shall be submitted as set forth hereinafter. The requirement for the CPM schedule is included to allow for adequate planning and execution of the Work, to determine the critical nature of delays, and to assist the Director in appraising the reasonableness of the proposed schedule and evaluating progress of the Work. The CPM schedule submitted under this Section shall utilize a CPM format, either the precedence or arrow diagramming method. The definitions of CPM terms and functions shall be as provided in the Associated General Contractors of America book *CPM in Construction, A Manual for General Contractors*, or a favorably reviewed alternative publication or reference. No progress payment will be made prior to submission and acceptance of the CPM Schedule.

1. The CPM schedule system shall consist of diagrams and accompanying mathematical analyses. The diagrams shall show elements of the project in detail and an entire project summary. Diagrams shall show the order and interdependence of activities and sequence in which the Work is to be accomplished as planned by the Contractor. The basic concept of a network analysis diagram shall be followed to show how the start of a given activity is dependent on the completion of preceding activities and its completion restricts the start of following activities. Detailed network activities shall include, in addition to construction activities, the submittal and favorable review of samples of material and Shop Drawings, the procurement of critical materials and equipment, fabrication of special material and equipment, and their Installation and testing. All activities of the City and the Director that affect progress and required Contract dates for completion of all or parts of the Work shall be shown. The

selection and number of activities shall be subject to favorable review by the Director. Summary networks shall be time scaled. Durations shall be in Days and shall not exceed fifteen (15) Days, except for submittal and delivery items. Where the duration of continuous Work exceeds fifteen (15) Days, Work items in the Construction Schedule shall be subdivided by location, approximate stationing or other sub-element of the Work.

The graphic network diagram shall include for each activity, the description, activity number, the estimated duration in Days, and all activity relationship lines. The network diagram shall be drawn for the early start of activities. All significant Submittals shall be scheduled along with manual Submittals and training on all large or critical pieces of equipment. If the precedence technique is utilized, the schedule project shall include a calendar in Work Days, a network report sorted by early start and a logic table report sorted by preceding Work item. If the arrow technique is utilized, the schedule report shall include a calendar in Work Days, a network report sorted by early start, a network report sorted by I-J numbers, and a network sorted by slack time and I-J numbers.

2. The critical path shall be shown on all reports and on the graphic network diagram. The activities which constitute the critical path shall be identified.

3. The mathematical analysis of the network diagram shall include a tabulation of each activity. The following information shall be furnished as a minimum for each activity:

(a) preceding and following event numbers

(b) activity description and number

(c) estimated duration of activities

(d) earliest start date (by calendar date)

(e) earliest finish date (by calendar date)

(f) actual start date (by calendar date)

(g) actual finish date (by calendar date)

(h) latest start date (by calendar date)

(i) latest finish date (by calendar date)

(j) slack or float

(k) percentage of activity completed

4. The program shall be capable of accepting revised completion dates as modified by approved time adjustments and recomputations of all tabulation dates and float accordingly.

5. Submission and review of the system shall be as follows:

(a) The complete network analysis system, consisting of the detailed network mathematical analysis and network diagrams, shall be submitted within thirty (30) Days after receipt of the Notice to Proceed.

(b) The Contractor shall participate in a review and evaluation of the proposed network diagrams and analysis by the Director. Any revisions necessary as a result of this review shall be resubmitted for review by the Director within ten (10) Days. When completed, the favorably reviewed schedule shall then be the schedule to be used by the Contractor for planning, organizing and directing the Work and for reporting progress. If the Contractor thereafter desires to make significant changes in its method of operating and scheduling, the Contractor shall notify the Director in writing stating the reasons for the change.

(c) The Contractor shall submit at monthly intervals a report of the actual construction progress. Each monthly report shall cover a period of approximately thirty

(30) Days ending around the 20th of each month. The monthly reports shall be submitted within ten (10) Days of the end of the reporting period.

(1) If the project is proceeding on schedule, the monthly update report may consist of a marked-up copy of the graphical network diagram. This submittal shall clearly indicate the status of any minor shifts in sequence or schedule and the estimated completion date or percent complete of all activities currently in progress. The Contract completion date shall also be indicated. The Contractor shall submit a narrative report relating to status of construction, the schedule, and factors which may affect the remainder of the schedule. The report shall show the activities or portions of activities completed during the reporting period. The report shall state the percentage of the Work actually completed and scheduled as of the report date and the progress along the critical path in terms of Days ahead or behind the allowable dates.

(2) If, in the opinion of the Director, the project is behind schedule, the monthly report shall include a revised network diagram and/or mathematical analysis showing the Contractor's proposed revised schedule. An analysis of the effect that the delay has on progress along other paths shall also be included in the report. The Contractor shall also submit a narrative report with each updated analysis which shall include but not to be limited to a description of current and anticipated problem areas, delaying factors and their impact, and an explanation of corrective actions taken or proposed.

(3) Periodic report shall be submitted in sufficient copies to cover Contractor needs plus five (5) copies and an available electronic copy to be retained by the Director.

6. To the extent that the favorably reviewed initial Construction Schedule, or revisions thereto, indicate anything not jointly agreed upon, it shall be deemed to be not favorably reviewed by the Director. Any omission of Work from the detailed schedule, otherwise required for Contract compliance, will not excuse the Contractor from completing such Work within any applicable completion date. The CPM schedule shall be generated by computer methods.

C. Schedule Review. Once each month, on a date mutually agreed upon, but no later than seven (7) business days after the monthly schedule progress report date, a Work Site meeting will be held to review the Construction Schedule and job progress. The Contractor shall also attend weekly meetings scheduled by the Director to review the progress of the Work in the preceding week and in the subsequent week, coordinate the Work with public agencies or other Contractors as required, and allow the Director to plan his or her activities for testing, inspection, etc.

D. Schedule Revisions. The conditions under which the Director will require revisions of the Construction Schedule include the following:

1. When delay in completion of any Work item or sequence of Work items results in an estimated extension of project completion by either twenty (20) business days or by ten percent (10%) of the remaining duration of time to complete the Contract, whichever is less.

2. When delays in Submittals or deliveries make replanning or rescheduling of the Work necessary.

3. When the schedule does not represent actual prosecution and progress of the Work.

4. When any change to the sequence of activities, the completion date for major portions of the Work, or when changes occur which affect the critical path.

5. When Contract Amendments or a Change Order necessitates schedule revision, the Contractor shall submit a schedule analysis of all Change Order Work with its proposal.

E. Cash Flow Projection. A cash flow projection shall be submitted with the Construction Schedule. This cash flow projection shall be revised and resubmitted when revisions of the Construction Schedule will result in changes to the projected cash flow.

F. Schedules showing project completion dates earlier than specified in the Supplemental Conditions will be rejected unless justification can be provided for early completion.

6-1.05 **SCHEDULE OF VALUES.** Prior to preparation of the first estimate for a progress payment, the Contractor shall submit for favorable review by the Director a detailed Schedule of Values or cost breakdown of the Work under each bid item awarded. The breakdown will then become the basis for partial payment determination. Elements of Work shall be grouped by structure, pipeline, system, etc. Within each grouping, Work should be itemized by readily measurable quantities of Work complete in place. For example, concrete should be in units of cubic yards including form Work and reinforcing steel. Move-on costs, bond and insurance costs, and Overhead costs shall not be considered an item of cost for this purpose but shall be prorated over items of Work. In the event the Schedule of Values is not favorable reviewed by the Director, another Schedule of Values shall be submitted that is mutually acceptable to the Contractor and the Director.

6-1.06 **CITY'S RIGHT TO STOP WORK.** The Director shall have the

authority to order the Contractor, in writing, to suspend the Work wholly or in part, for such period as the Director may deem necessary due to the failure on the part of the Contractor to correct Work that is not in accordance with the requirements of the Contract Documents or if Contractor persistently fails to carry out Work in accordance with the Contract Documents.

The Contractor shall immediately comply with the written order of the Director to suspend the Work wholly or in part. The suspended Work shall be resumed when conditions are favorable and methods are corrected, as ordered or approved in writing by the Director.

Any stoppage of work under this section shall be at the Contractor's sole expense, and the Contractor shall have no claim against the City based on the Contractor's failure to perform the Work in accordance with the Contract Documents.

In addition to the City's right to stop Work, the City may order the Contractor to submit to the City at no additional cost to the City, additional information concerning Contractor's planned Work if the Contractor fails to promptly correct Work that is not in accordance with the requirements of the Contract Documents or persistently fails to carry out Work in accordance with the Contract Documents. The additional information ordered by the City may include, but is not limited to, preparation of Submittals or Working Drawings not otherwise required to be submitted under the Contract Documents.

In the event the City discovers that the Contractor has created an unsafe condition the City may arrange for other work forces to remedy the condition. Such remedial work shall be at the sole discretion of the City. If this action is required, the City may unilaterally terminate Work under the Contract, and will pay only for the quantities of Work actually performed, less the cost of the City's remedial Work. In the event that Work is not halted, the Contractor must take immediate steps to correct the situation. There will be no extra payment for Work required

to correct unsafe conditions.

The right of the City to suspend the Work shall not give rise to a duty on the part of the City to exercise this right for the benefit of the Contractor or any other person or entity. This right shall be in addition to and not in restriction or derogation of the City's other rights under the Contract Documents.

In the event of a suspension of Work under any of the conditions set forth in this Section 6-1.06, such suspension of Work shall not relieve the Contractor of its legal responsibilities as set forth in these General Conditions.

6-1.07 **TIME OF COMPLETION.** The Contractor shall complete the entire Work, including Installation, repairs, startup, troubleshooting, painting, and touchup, training, submittal or record drawings, and manuals, cleanup, demobilization, and all other Work within the number of Days set forth in the Supplemental Conditions. The time for completion includes an allowance for working time lost due to normal inclement weather.

Extensions of time may be allowed for unusual inclement weather under the provisions hereinafter described. Unusual inclement weather is weather which adversely affects "controlling" operations or the critical path of construction and which meets one of the following criteria:

A. For the particular calendar month in question, the number of individual Days with rainfall exceeding 0.10 inches exceeds the average number of such Days for that month over the immediately preceding five (5) years of record by at least three (3) Days.

B. For the particular calendar month in question, the total cumulative rainfall for that month exceeds the average cumulative rainfall for that month over the immediately preceding five (5) years of record by at least two inches (2").

Rainfall shall be measured at a publicly operated, maintained, and reported station in reasonable proximity to the construction site. A claim for delay shall indicate the period of rainfall which is claimed as "unusual," the specific dates during which the unusual rainfall and subsequent wet soil conditions prevented Work, and the specific critical path tasks adversely affected by such unusual weather. A claim for delay due to unusual inclement weather shall be filed within ten (10) Days of the apparent end of the unusual inclement rainfall period, whether or not the monthly totals are available at that time. The burden of proof that weather meets the criteria for unusual weather shall be solely the responsibility of the Contractor.

It is the responsibility of the Contractor to order materials required for the Work properly and promptly on a Notice to Proceed. If evidence presented demonstrates that, in spite of the Contractor's efforts, government-established priorities controls delay material deliveries, suitable extension of time will be made.

If performance of extra Work ordered by the City or failure of the City to provide the necessary site for Installation affects construction tasks which are "controlling" or which are on the "critical path" of the Construction Schedule, suitable extensions of time will be made.

The Contractor shall not be entitled to a time extension for delays in activities on non-critical paths of the favorably reviewed schedule unless the duration of the excusable delay exceeds the total float of the activities being delayed. If the duration of an excusable delay does exceed the total float of the activities affected by the delay, the Contractor shall be entitled to an extension equal to the difference.

C. Determination that a day is a non-working day by reason of inclement weather or conditions resulting immediately therefrom, shall be made by the Director.

6-1.08 **LIQUIDATED DAMAGES.** It is agreed by the parties to the Contract

that in case all the Work called for under the Contract in all parts and requirements is not completed within the number of Days as set forth in the Supplemental Conditions, damage will be sustained by the City and that it is and will be impracticable and extremely difficult to ascertain and determine the actual damage which the City will sustain in the event of and by reason of such delay; and it is therefore agreed that the Contractor will pay to the City, the monetary amount indicated in the Supplemental Conditions in dollars (U.S.) per day for each and every calendar day of delay in completing the Work in excess of the number of Days prescribed and the number of additional calendar days, if any, authorized by Contract Change Order; and the Contractor agrees to pay said Liquidated Damages herein provided for, and further agrees that the City may deduct the amount thereof from any moneys due or that may become due the Contractor under the Contract.

It is further agreed that in case the Work is not finished and completed in all parts and requirements within the number of Days specified, the City shall have the right to increase the number of Days or not, as it may deem best to serve the interest of the City, and if it decides to increase the said number of Days, it shall further have the right to charge to the Contractor, its heirs, assigns or sureties and to deduct from the final payment for the Work all of any part, as it may deem proper, of the actual cost of engineering, inspection, superintendence, and other Overhead expenses which are directly chargeable to the Contract, and which accrue during the period of such extension, except that cost of preparation of final statement shall not be included in such charges.

6-1.09 **DELAYS AND EXTENSIONS TO THE WORK.** The Contractor must complete all Work within the time specified in the Agreement. The Contractor will be granted an extension of time and will not be assessed with liquidated damages or the cost of engineering

and inspection for any delay in substantially completing the Work (or parts thereof) beyond the time set forth in the Agreement, provided that such delay was caused by unforeseeable causes beyond the control and without the fault or negligence of the Contractor. Examples of such causes include acts of public enemy, fire, floods, abnormal weather (as described below), earthquakes, epidemics, quarantine restrictions, strikes, labor disputes and freight embargoes, fire, changes made pursuant to the provisions of "Changes in the Work" under Section 3 of these General Conditions or acts or neglect of the City not contemplated by the Contract Documents. In all cases, any extension of time is conditioned on the following:

1. That the cause is not due to the fault or negligence of the Contractor, and the Contractor has taken reasonable precautions to prevent and minimize the effects thereof; and

2. That the Contractor notifies the Director in writing within three (3) Days from the beginning of such delay specifying the nature of the delay and the measures that have been or will be taken to prevent or minimize the delay. Failure to submit written notice within this time period shall constitute an absolute waiver of any claim for a time extension.

No extension of time will be granted for a delay caused by a shortage of materials, unless the Contractor furnishes to the City documentary proof that it has diligently made every effort to obtain such materials from all known sources within reasonable reach of the work and further proof, as acceptable to the Director, that the inability to obtain such materials when originally planned did in fact cause a delay in Final Completion of the entire Work which could not be compensated for by revising the sequence of the Contractor's operations. Only the physical shortage of material will be considered as a cause for extension of time, and no consideration

will be given to any claim that material could not be obtained at a reasonable, practical or economical cost or price, unless it is shown to the satisfaction of the City that such material could have been obtained only at exorbitant prices entirely out of line with current rates, taking into account the quantities involved and the usual practices in obtaining such quantities.

No extension of time will be granted for a delay caused by Contractor's staff turnovers, understaffing or insufficient quantity of qualified staff able to perform the necessary work.

The term "shortage of materials," as used in this section, shall apply only to materials, articles, parts or equipment which are standard items and shall not apply to materials, parts, articles or equipment which are processed, made, constructed, fabricated or manufactured to meet the specific requirements of the Contract Documents.

No extensions of time will be granted for delays that have no measureable impact on the completion of the Work (or parts thereof) under the Contract Documents. When extensions of time are granted, they will be limited to the period equivalent to the actual number of Days lost on the critical path or controlling operations of the Construction Schedule, taking into account the extent to which that delay could be decreased by reasonable mitigation measures by the Contractor. All requests for extensions of time must be supported with a critical path analysis showing the critical path and impacts to it. Contractor's failure to submit this analysis will be sufficient cause for denial of any request for a time extension.

Within a reasonable period of time after the Contractor submits the notice and information required by this section, the City will determine whether an extension of time is justified and, if so, the number of days for the extension.

Abnormal weather may be a valid basis for a time extension under the Agreement. "Abnormal Weather" occurs when the number of days of rain above 0.5 inches in a 24 hour

period exceeds the average for such rainfall in a particular month as determined by the National Weather Service. The Contractor will only be entitled to, at most, a time extension for the number of days of rain exceeding the average for that month in the locale where the Work is to be performed. If delays are caused by the Contractor or those for whom the Contractor is responsible, the Contractor will only be entitled to, at most, a time extension for the number of rain days exceeding the average for the month when the Work should have been performed.

In addition, before a time extension may be granted for abnormal weather, the Contractor must establish that the rain either significantly impacted at least sixty percent (60%) of the planned work of the controlling operations for a particular day or prohibited at least five (5) hours of work on the controlling operations planned for that day. Contractor shall employ reasonably methods to mitigate the impact of abnormal weather (i.e., dewatering, protection of site, etc.) The occurrence of rain during non-work hours or having minimal impact to work on the controlling operation shall not constitute a day of abnormal weather.

In the event that the project experiences favorable weather for a particular month (e.g., the number of actual rain days in a month less than that indicated above for allowable rain days per months), the additional float resulting from such favorable weather shall accrue to the project.

Any Contractor claim for damages or additional compensation based on delay shall be limited to only those circumstances where the Contractor has fulfilled each of the following three (3) requirements:

1. Contractor has established its entitlement to a time extension pursuant to the provisions described above regarding delay and extensions to the Work.
2. The delay was caused solely by the City's issuance of changes made pursuant to the

provisions of "Changes in the Work" under Section 3 of these General Conditions or by acts or neglect of the City.

3. The delay was unreasonable under the circumstances and not within the contemplation of the parties.

It is expressly understood and agreed that delays caused by the City will be non-compensable when there are concurrent delays caused by the Contractor. Also, the Contractor shall have no entitlement to additional compensation for any delay where there have been concurrent delays caused by non-compensable delays, including, but not limited to, fire, floods, earthquakes, epidemics, quarantine restrictions, strikes, labor disputes, and freight embargoes.

Contractor's damages and/or additional compensation for delays will consist solely of the extended costs of maintaining the Contractor's Work Site presence. The Contractor will not be entitled to any extended home office overhead.

Compensation for idle time of equipment will be determined in the same manner as determinations are made for equipment used in the performance of extra work paid for on a Force Account basis with the following exceptions:

1. The time for which compensation will be paid will be the actual normal working hours during which such delay conditions exists, but in no case will exceed eight (8) hours in any one day.
2. The days for which compensation will be paid will be each calendar day of the work week (defined elsewhere in the Contract Documents) and Legal Holidays, during the existence of such delay, except that when rental of the equipment is paid for under the provisions in Section 3-1.06C, "Force Account Payment – Equipment," of these General Conditions, no payment will be made for delays in accordance with the

provisions of this section.

Actual loss shall be understood to include no items of expense other than idle time of personnel, cost of extra moving of equipment, and cost of longer hauls. Compensation for idle time of equipment will be determined as provided in this section and compensation for idle time of personnel will be determined pursuant to Section 3-1.06A, "Force Account Payment – Labor," of these General Conditions. No markup will be added in either case for Overhead and profit. The cost of extra moving of equipment and the cost of longer hauls will be paid for as extra work as provided pursuant to "Changes to the Work" elsewhere in the Contract Documents.

6-1.10 **TERMINATION.**

XXIII. 6-1.10A **TERMINATION OF AGREEMENT – CONVENIENCE OF CITY.** The Department reserves the right to terminate the Contract at any time and for any reason if the Director determines that to do so would be in the best interest of the City. Any termination which is not based on the circumstances set forth in Section 6.1-10B below shall be effected by delivery to the Contractor of a Notice of Termination specifying the extent to which performance of Work under the Contract is terminated, and the date upon which such termination becomes effective.

Upon the Contractor's receipt of a written Notice of Termination for convenience, the Contractor shall cease Work as to those portions of the project so terminated and shall undertake the steps outlined in Section 6-1.10B below.

1. Acceptance of the Contract as hereinafter specified shall not relieve the Contractor of responsibility for damage to materials except as follows:

   a. The Contractor's responsibility for damage to materials for which partial payment has been made as provided in Section 7-1.07, "Progress

Payments," of these General Conditions and for materials furnished by the City for use in the Work and unused shall terminate when the Director certifies that such materials have been stored in the manner and at the locations he or she has directed.

b. The Contractor's responsibility for damage to materials purchased by the City subsequent to the issuance of the notice that the Contract is to be terminated shall terminate when title and delivery of such materials has been taken by the City.

c. When the Director determines that the Contractor has completed the Work under the Contract directed to be completed prior to termination and such other Work as may have been ordered to secure the project for termination, the Contractor will recommend that the City formally accept the Work, and immediately upon and after such Acceptance by the City, the Contractor will not be required to perform any further Work thereon and shall be relieved of its contractual responsibilities for injury to persons or damage to property which occurs after the formal Acceptance of the project by the City.

2. The total compensation to be paid to the Contractor shall be determined by the Director on the basis of the following:

a. The reasonable cost to the Contractor, without profit, for all Work performed under the Contract, including mobilization, demobilization and Work done to secure the project for termination. Reasonable cost will include a reasonable allowance for project Overhead and general

administrative Overhead not to exceed a total of seven percent (7%) of Direct Costs of such Work.

b. A reasonable allowance for profit on the cost of the Work performed as determined under subsection (a), provided the Contractor establishes to the satisfaction of the Director that it is reasonably probable that it would have made a profit had the Contract be completed and provided further, that the profit allowed shall in no event exceed four percent (4%) of said cost.

c. The reasonable cost to the Contractor of handling material returned to the vendor, delivered to the Department or otherwise disposed of as directed by the Director.

d. A reasonable allowance for the Contractor's administrative costs in determining the amount payable due to termination of the Contract.

All records of the Contractor and the Contractor's Subcontractors, necessary to determine compensation in accordance with this Section, shall be open to inspection or audit by representatives of the Department at all times after issuance of the notice that the Contract is to be terminated and for a period of three (3) years, and such records shall be retained for that period.

After Acceptance of the Work by the Director, the Director may make payments on the basis of interim estimates pending issuance of the Final Statement, when in his or her opinion the amount thus paid, together with all amounts previously paid or allowed, will not result in total compensation in excess of that to which the Contractor will be entitled. All payments, including payment upon the Final Statement, shall be subject to deduction for prior payments and amounts, if any, to be kept or retained under the provisions of the Contract.

In the event that the City terminates this Contract under Section 6-1.10B below and it is determined for any reason that there was not sufficient cause to do so, the City's termination automatically will convert to a termination for convenience under this section and the terms and conditions outlined in this section automatically will be applied to effectuate the Contract termination. Thus, damages to which a Contractor may be entitled as a result of an improper default termination will be limited to the amounts provided for in this section.

The provisions of this section shall be included in all subcontracts.

6-1.10B **TERMINATION OF AGREEMENT - FOR CAUSE.** An "Event of Default" as referred to in this section shall occur if the Contractor:

1. Fails to maintain progress of the Work in accordance with the requirements of the Contract Documents; or
2. Fails to prosecute the Work or any of its components in accordance with the Contract Documents; or
3. Persistently or repeatedly fails or refuses to supply sufficient properly skilled workers or proper material to permit the performance of the Work in accordance with the Contract Documents; or
4. Fails to make prompt payment to Subcontractors or Suppliers in accordance with the respective agreements between the Contractor and the Subcontractor and Contractor and Supplier; or
5. Fails to comply with applicable laws, ordinances or rules, regulations or orders of a public authority having jurisdiction over the Work; or
6. Abandons, assigns or sublets the Contract without approval of the City; or
7. Becomes bankrupt or is subject to appointment of a receiver on behalf of the

Contractor; or

8. Otherwise is guilty of a substantial breach of a provision of the Contract Documents.

Upon the City's reasonable belief that there has been an Event of Default by the Contractor, the City may elect to give the Contractor written notice thereof. The Contractor thereafter shall cure the default as soon as possible and in no event after ten (10) Days from the Contractor's receipt of the City's written notice.

If the Contractor does not timely cure its default, the City may, without waiver of any of its other rights and remedies, elect to terminate the Contract, or portion thereof.

Upon the City's election to terminate the Contract, or portion thereof, the City shall have the right to complete the Work, or portion involved, by whatever means and methods it deems expedient, including the hiring of others on such terms as the City deems advisable. The City shall have the right to take possession of the Contractor's materials, plant, tools, equipment and property of any kind provided by or on behalf of the Contractor for the purpose of the Work, or a portion of them, without being responsible to the Contractor for wear and tear. The Contractor shall have no rights in such property during its use by the City. The City shall not be required to obtain the lowest prices for completing the Work or a portion of it but shall make such expenditures as, in the City's sole judgment, best accomplish such completion.

The expense of completing such Work or portion thereof, together with a reasonable charge for engineering, managerial and administrative services, as certified by the City, shall be charged to the Contractor, and the expense so charged shall be deducted by the City out of such monies as may be due or may at any time thereafter become due to the Contractor. In case such expense is more than the sum which otherwise would have been payable to the Contractor under the Agreement, then the Contractor or its surety or sureties shall promptly pay the amount of

such excess so due. When the City terminates the Contract under this section, the Contractor shall not be entitled to receive any further payments until the Work is completed and there has been a final settlement of costs of completing the Work covered by such notice of default.

The City will issue to the Contractor a written notice specifying that the Contract, or portion thereof, is terminated. Upon receipt of said written notice and, except as otherwise directed in writing by the City, the Contractor shall:

1. Stop all Work under the Contract; or if partial termination, stop Work relating to the terminated portion of the Agreement;
2. Perform Work the City deems necessary to secure the Work Site for termination including measures to leave the Work Site in a safe condition;
3. Remove equipment from the site of Work, as specified by the City;
4. Take such action as is reasonably necessary to protect materials from damage;
5. Notify all Subcontractors and Suppliers that the Contract or portion thereof is being terminated and that their contracts or orders are not to be further performed unless otherwise authorized in writing by the City;
6. Provide the City with an inventory list of all materials previously produced, purchased or ordered from Suppliers for use in the Work and not yet used in the Work, including its storage location, and such other information as the City may request;
7. Dispose of materials not used in the Work as directed by the Director. It shall be the Contractor's responsibility to provide the City (a) with good title to all materials purchased by the City hereunder, including materials for which partial payment has been made by the City and (b) with bills of sale or other documents of title for such

materials;

8. Subject to the prior written approval of the City, settle all outstanding liabilities and all claims arising out of Subcontractors or orders for materials terminated hereunder. To the extent directed by the City, the Contractor shall assign to the City all rights, title and interests of the Contractor under subcontracts or orders for materials terminated hereunder. The City shall be at liberty to negotiate with and engage any Subcontractors who had contracted with the Contractor for the Work;
9. Furnish the City with the documentation required to be furnished by the Contractor under the provisions of the Contract Documents, including, on projects as to which Federal funds are involved, all documentation required under the Federal requirements included in the Agreement; and
10. Take such other actions as the City may direct.

If only a portion of the Work has been terminated, the Contractor shall perform the remainder of the Work in conformity with the Contract Documents and in such a manner as not to interfere with the City or others in their performance and completion of the portion of the Work which was terminated.

The City may recover from the Contractor the amount of any loss or damage, including consequential damages, suffered or incurred as a result of the Contractor's default.

XXIV. SECTION 7

ACCEPTANCE AND PAYMENT

7-1.01 **ACCEPTANCE.** When the Contractor believes that the entire Work is fully and finally completed, including the satisfactory completion of inspections, tests, and documentation specified in the Contract Documents and completion of all punch list and clean-up items, the Contractor shall submit to the City a written request for final Acceptance within fifteen (15) Days thereafter, specifying that the Work is fully and finally completed and the date on which it was completed. Within thirty (30) Days after receipt of the request for final Acceptance, the City will inspect the Work and will either:

1. Reject the request for final Acceptance, specifying the defective and/or uncompleted portions of the Work; or
2. Notify the Contractor that the Work will be accepted by Resolution of the City Council of the City of Roseville, and a Notice of Completion will be caused to be recorded by the City Clerk; or
3. Notify the Contractor that the Work has been accepted by the City but no Notice of Completion will be recorded.

If the City rejects the request for final Acceptance, the Contractor shall promptly remedy the defective and/or uncompleted portions of the Work. Thereafter, the Contractor shall again submit a written request for final Acceptance of the Work, specifying a new date based on the date the defective and/or uncompleted portions of the Work were corrected. Thereafter, the foregoing procedure shall apply successively until the City has verified that the Work is fully and finally completed and accepted the Work by Resolution of the City Council or by written

notification from the Director. Immediately upon such Acceptance, the Contractor shall be relieved of the duty of maintaining the Work as a whole.

All warranties commence upon final Acceptance of the Work. The City's final Acceptance of the Work shall not be construed as an acceptance by the City of any latent defects discovered with regard to the Contractor's work. Furthermore, Contractor's obligations under Section 5-1.22 "Responsibility for Damage and Indemnification" shall still remain applicable after the City's grant of final Acceptance of the Work.

Prior to final Acceptance, the Contractor shall submit to the City the Record Documents and Operation and Maintenance Manuals as specified in the Contract Documents.

7-1.02 **SCOPE OF PAYMENT.** The Contractor shall accept the compensation provided in the Contract as full payment for furnishing all labor, materials, tools, equipment, and incidentals necessary to the completed Work and for performing all Work contemplated and embraced under the Contract; also for loss or damage arising from the nature of the Work, or from the action of the elements, or from any unforeseen difficulties which may be encountered during the prosecution of the Work until the Acceptance by the Director and for all risks of every description connected with the prosecution of the Work, also for all expenses incurred in consequence of the suspension or discontinuance of the Work as provided in the Contract; and for completing the Work according to the Contract. Neither the payment of any estimate nor of any retained percentage shall relieve the Contractor of any obligation to make good any defective Work or material.

No compensation will be made in any case for loss of anticipated profits.

7-1.03 **NOTICE OF POTENTIAL CLAIM.** The Contractor shall not be entitled to the payment of any additional compensation for any act or failure to act by the City,

including failure or refusal to issue a Change Order, or for the happening of any event, thing, occurrence or other cause unless the Contractor has given the City due written Notice of Potential Claim as hereinafter specified, provided, however, that compliance with this Section 7-1.03 shall not be a prerequisite as to matters within the scope of the notice provisions in Section 6-1.07, "Time of Completion," or the notice provisions in Section 6-1.08, "Liquidated Damages," of these General Conditions, nor to any claim which is based on differences in measurement or errors of computation as to correct quantities.

The written Notice of Potential Claim shall set forth the reasons for which the Contractor believes additional compensation will or may be due, the nature of the costs involved, and, insofar as possible, the amount of the potential claim. The said Notice as above required must have been given to the Director prior to the time that the Contractor shall have performed the Work giving rise to the potential claim for additional compensation, if based on an act or failure to act by the Director, or in all other cases within seven (7) Days after the happening of the event, thing, occurrence or other cause giving rise to the potential claim.

If the Notice of Potential Claim does not include complete information about the claim or the parties do not execute a Contract Change Order in connection with the Notice of Potential Claim, Contractor shall submit complete information about its claim for additional compensation and/or extension of time for performance within fifteen (15) Days after such work is performed. Failure to provide written notice of claim prior to undertaking such work or failure to timely submit a complete and specific information about the claim for additional compensation and/or extension of the time for performance shall be deemed a waiver and abandonment of such claim.

If there is a dispute over any claim, the Contractor shall continue to Work during the dispute resolution process in a diligent and timely manner as directed by the City, and shall be

governed by all applicable provision of the Agreement.

The Contractor shall maintain cost records of all Work that is the basis of any dispute. On a daily basis, Contractor shall submit to City completed daily forms, the format of which will be acceptable to the City, with respect to the Contractor's costs of performing the disputed work. These daily forms shall itemize all of Contractor's costs in performing the disputed work, including, but not limited to, all costs relating to materials, labor and equipment with respect to the disputed work. These daily forms shall provide names or identification and classification of affected workers, the hourly rate of pay and hours worked, and also the size, type, and identification number of equipment and hours operated. Said daily work forms shall be duly signed and verified by the Contractor or its authorized representative. The City's receipt of the Contractors' daily forms shall not constitute an approval of the Contractor's claim. Contractor's failure to submit the daily forms on a daily basis shall constitute a waiver of the Contractor's right to claim any additional compensation for the disputed work.

Each Contractor claim shall include full and complete information concerning the Claim. Contractor shall provide a clear, concise recital of the basis, upon which the claim is asserted, including a designation of the provisions of the Contract Documents upon which the claim is based. Contractor shall also include a statement as to the amount of time and/or compensation sought pursuant to the claim; if Contractor's claim arises from an ongoing occurrence, Contractor shall so state in its claim, including a description of the specific Work activities affected by the claim. All costs, expenses or damages and extensions of time claimed shall be described in reasonable detail under the circumstances together with complete supporting documentation.

The City will review any timely Notice of Potential Claim and supporting information

submitted by Contractor. In conducting this review, the City shall have the right to require the Contractor to submit such additional or supporting documents, data and other information as the City may require.

If an agreement can be reached which resolves the Contractor's claim, the parties will execute a Contract Change Order to document the resolution of the claim. If the parties cannot reach agreement with respect to the Contractor's claim, the Contractor shall still be obligated to comply with the claim identification provisions identified in these General Conditions, including but not limited to Section 7-1.04.

It is the intention of this Section 7-1.03 that differences between the parties arising under and by virtue of the Contract be brought to the attention of the Director at the earliest possible time in order that such matters may be settled, if possible, or other appropriate action promptly taken. The Contractor hereby agrees that it shall have no right to additional compensation for any Claim that may be based on any such act, failure to act, event, thing or occurrence for which no timely written Notice of Potential Claim as herein required was filed.

7-1.04 **CLAIMS.** Contractor must submit all Claims, for which it has previously submitted a Notice of Potential Claim, prior to Acceptance of the Work. Each such Claim must be sent to the City by registered mail or certified mail with return receipt requested and must contain reasonable documentation to support the Claim.

Upon receipt of a Claim, the City shall conduct a reasonable review of the Claim and, within a period not to exceed forty-five (45) Days, or such further time as mutually agreed upon or necessary pursuant to Public Contract Code Section 9204, the City shall provide the Contractor a written statement identifying what portion of the Claim is disputed and what portion is undisputed. If the City does not respond to a Claim from the Contractor within the time

specified herein, such Claim shall be deemed rejected in its entirety.

Any payment due on an undisputed portion of the Claim shall be processed and made within sixty (60) Days after the City issues its written statement.

If the Contractor disputes the City's written response, or if the City does not respond within the time specified herein, the Contractor may demand in writing an informal conference to meet and confer for settlement of the issues in dispute. Upon receipt of a demand in writing sent by registered mail or certified mail, return receipt requested, the City shall schedule a meet and confer conference within thirty (30) Days for settlement of the dispute.

Within ten (10) business days following the conclusion of the meet and confer conference, if the claim or any portion of the claim remains in dispute, the City shall provide the Contractor a written statement identifying the portion of the Claim that remains in dispute and the portion that is undisputed. Any payment due on an undisputed portion of the Claim shall be processed and made within sixty (60) Days after the City issues its written statement. Any disputed portion of the Claim, as identified by the Contractor in writing, shall be submitted to nonbinding mediation, with the City and the Contractor sharing the associated costs equally. The City and the Contractor shall mutually agree to a mediator within ten (10) business days after the disputed portion of the Claim has been identified in writing. If the parties cannot agree upon a mediator, each party shall select a mediator and those mediators shall select a qualified neutral third party to mediate with regard to the disputed portion of the Claim. Each party shall bear the fees and costs charged by its respective mediator in connection with the selection of the neutral mediator. If mediation is unsuccessful, the parts of the Claim remaining in dispute shall be resolved in accordance with Section 7-1.05 below.

7-1.05 **DISPUTE RESOLUTION PROCEDURE.** All Claims not resolved

pursuant to Section 7-1.04, shall be resolved pursuant to Public Contract Code Section 10240, et seq.

7-1.06 **STOP PAYMENT NOTICES.** The City, by and through the Department or other appropriate office or officers, may at its option and at any time retain out of any amounts due the Contractor, sums sufficient to cover claims, filed pursuant to Civil Code Section 9350, et seq., including an amount to provide for the reasonable cost of any litigation thereunder.

7-1.07 **PROGRESS PAYMENTS.** Within fifteen (15) Days after the effective date in the Notice to Proceed, but in any event prior to Contractor's first Application for Payment, the Contractor shall submit to the City a detailed Schedule of Values.

Upon its approval, the Schedule of Values will form a basis for determining the compensation payable to the Contractor based on its actual progress of Work with respect to each Lump Sum bid item. The City, prior to any progress payment being made, must approve the Schedule of Values.

At the Director's discretion the approved Schedule of Values may be used as the basis for calculating the adjustment in compensation for a lump sum bid item due to changes ordered by the Director. When an ordered change increases or decreases the quantities shown in an approved Schedule of Values, at the Director's discretion, the adjustment in compensation may be determined in the same manner specified for increases and decreases in the quantity of a bid item of work in accordance with Section 3-1.05(B), "Contract Price Adjustment," of these General Conditions.

The Contractor once in each month shall submit an Application for Payment, for approval by the Director. Contractor's Applications shall be based on the Schedule of Values submitted to the City. These applications shall be supported by: (1) documentation requested by the City to

substantiate the payment request; (2) statutory releases from Contractor and all Subcontractors and suppliers pursuant to Civil Code Sections 8132 and 8138; and (3) certified payroll records for the period for which payment is requested. Specifically, the Contractor will submit conditional waivers upon progress payment executed by all contractors and suppliers that will be receiving sums sought in the instant payment request and also submit unconditional waivers upon progress payment executed by all contractors and suppliers that have been paid to the date of the payment request. The Contractor shall certify that the Work for which payment is requested has been accomplished. When requested by the City, the Contractor shall submit receipts, invoices and other documentation that the City requires to be furnished for purpose of evaluating the application.

The City will pay the Contractor within thirty (30) Days after its receipt of an undisputed and properly submitted Application for Payment, after deducting all previous payments, retention, and other sums as described in the Contract Documents. Within seven (7) Days of its receipt of the Contractor's Application for Payment, the City will determine whether it complies with the provisions of the Contract Documents. As appropriate, the City will return the application to the Contractor accompanied by a document prepared by the City setting forth the reasons for the rejection. Thereafter, the Contractor shall correct and resubmit the Application for Payment. Progress payments may be withheld for Work that is not performed in accordance with the Contract Documents.

The City may deduct the following from each progress payment:

1. An amount equal to one hundred and twenty-five percent (125%) of the amount claimed under any stop payment notice or other lien filed against the Contractor, which includes an amount to provide for the reasonable cost of any litigation

thereunder.

2. Any Liquidated Damages or Assessments that have accrued as of the date of the Application for Payment.
3. Any sums expended by the City in performing any of the Contractor's obligations under the Agreement that the Contractor has failed to perform.
4. Any other sums that the City is entitled to recover from the Contractor under the terms of the Contract including damages to the City's property.
5. The failure of the City to deduct any of the above identified sums from a progress payment shall not constitute a waiver of the City's right to such sums.

No such estimate or payment shall be construed to be an acceptance of any defective Work or improper materials.

Under no circumstances will the City make payment to unlicensed Contractors. As a condition of payment, the Contractor is required to maintain the applicable Contractor's license as identified in the Notice to Contractors for the duration of the Work.

7-1.08 **PAYMENT FOR MATERIALS AND EQUIPMENT ON HAND.**

Partial payments may be made to the extent of seventy-five percent (75%) of the cost of materials and equipment plus delivery to be incorporated in the Work, provided that such materials and equipment meet the requirements of the Contract Documents and are delivered to acceptable sites on the plant site or at other sites in the vicinity that are acceptable to the City and only with the prior written approval by the City. Such delivered costs of stored or stockpiled materials and equipment may be included in the next progress payment after the following conditions are met:

A. Equipment and materials will only be eligible if given conditional or final

Acceptance by the Director and are in apparent compliance with favorably reviewed Submittals.

B. Only equipment or materials which have received favorable review of Shop Drawings will qualify.

C. The material or equipment has been stored or stockpiled adequately protected against damage in a manner acceptable to the Director at an approved site.

D. The Contractor has furnished the Director with acceptable evidence of the quantity and the quality of such stored or stockpiled materials or equipment with identification of where they will be incorporated into the project with Specification reference.

E. The Contractor has furnished the Director with satisfactory evidence that the material or equipment and transportation costs have been paid.

F. The Contractor has furnished the City legal title (free of liens or encumbrances of any kind) and lien releases to the material or equipment so stored or stockpiled.

G. The Contractor has furnished the City evidence that the material or equipment so stored or stockpiled is insured against loss by damage to or disappearance of such materials at any time prior to use in the Work.

It is understood and agreed that the transfer of title and the City payment for such stored or stockpiled materials or equipment shall in no way relieve the Contractor of its responsibility for furnishing and placing such materials or equipment in accordance with the requirements of the Contract Documents.

In no case will the amount of progress payments for materials or equipment on hand exceed the Contract Price for such materials or equipment or the Contract Price for the Contract item in which the material is intended to be used.

No partial payment will be made for stored or stockpiled living or perishable plant

materials.

The Contractor shall bear all costs associated with the progress payment of stored or stockpiled materials or equipment in accordance with the provisions of this Section.

7-1.09 **RETENTION ON PROGRESS PAYMENTS.** From each progress payment estimate, five percent (5%) will be deducted and held in retention by the City. The remainder, less any deductions described in Section 7-1.07, "Progress Payments," of these General Conditions, will be paid to the Contractor as progress payments.

Pursuant to Public Contract Code Section 22300, the successful Bidder may submit Securities in lieu of retention payments by the City. Upon the Contractor's request, the City will make payment of funds withheld from progress payments, pursuant to the requirements of California Public Contract Code Section 22300, if the Contractor deposits in escrow with the City or with a bank acceptable to the City, securities eligible for investment under California Government Code Section 16430, bank or savings and loan certificates of deposit, interest bearing demand deposit accounts, standby letters of credit, or any other security mutually agreed to by the Contractor and the City, upon the following conditions:

1. The Contractor shall bear the expenses of the City and the escrow agent in connection with the escrow deposit made.

2. Securities or certificates of deposit to be placed in escrow shall be of a value at least equivalent to the amounts of retention to be paid to the Contractor pursuant to this section.

3. Contractor shall enter into an escrow agreement satisfactory to the City, which agreement shall be substantially similar to the form provided in California Public Contract Code section 22300.

4. The Contractor shall obtain the written consent of the surety to such agreement.

7-1.10 **FINAL PAYMENT.** Final payment will be made only after Contractor has achieved Final Completion of the Work pursuant to the provisions of Section 7-1.01, "Acceptance," of these General Conditions. Before final payment can be made, the Contractor shall have furnished the City with the following:

1. All Record Documents, catalogues, instruction sheets and information as required by the Contract Documents.

2. Conditional Waivers and Releases Upon Final Payment executed by Contractor and all Subcontractors and Suppliers, as provided by Civil Code Section 8136. Unconditional Waivers and Releases Upon Final Payment, as provided in Civil Code Section 8138, executed by Contractor and all Subcontractors and Suppliers, must be provided for all Subcontractors and Suppliers that have been paid in full.

Within thirty (30) Days of the date of the City's Acceptance of the Work, the Contractor shall prepare and submit a Final Invoice, showing the proposed total amount due the Contractor, segregated by Bid item quantities, Change Order Work, and other basis for payments; deductions made or to be made for prior payment; and amounts previously retained. Prior invoices and payments shall be subject to correction in the proposed Invoice for Final Payment. Payments to the Contractor will be made only for actual quantities of the Contract items of work constructed in accordance with the Contract Documents.

The City will review the Contractor's proposed Final Invoice and necessary changes or corrections will be forwarded to the Contractor. Within ten (10) Days thereafter, the Contractor

shall submit a revised proposed Final Invoice incorporating changes or corrections made by the City together with any new claims resulting therefrom. Upon approval by the City, the corrected proposed Final Invoice will become the approval Final Invoice.

If agreements are reached on all questions regarding the Final Invoice, the City will pay the entire sum found due on the approved application. However, the City will withhold sums sufficient to pay all unsettled claims for which stop payment notices have been filed pursuant to Section 9350, et seq. of the California Civil Code, together with the reasonable cost of any litigation thereunder.

Final payment will be made within thirty (30) Days after receipt of an approved Final Invoice and other required Submittals referenced above or within sixty (60) Days after Acceptance of the work by the City, whichever is later, provided, however, that if an approved Final Invoice has not been submitted within sixty (60) Days after Acceptance of the Work by the City, the City may elect to make payment of sums not in dispute without prejudice to the right of either the City or the Contractor in connection with such disputed sums. Notwithstanding the foregoing, if a Notice of Completion is recorded, final payment shall not be made prior to the expiration of the thirty-five (35) calendar day lien period. The start of this lien period is the date the Placer County Recorder's Office records the Notice of Completion.

The City may withhold from the Final Payment an amount not to exceed one hundred fifty percent (150%) of any amount in dispute between the City and the Contractor.

The making of Final Payment shall not operate to release the Contractor or its sureties from obligations arising under the Contract, the Contract bonds and warranties as herein provided. Specifically, the making of final payment shall not constitute a waiver and release of claims by the City arising from:

1. Unsettled or future liens;

2. Failure of the Work to comply with the requirements of the Contract Documents;

3. The terms of any warranties required by or contained in the Contract Documents;

4. The right to any insurance proceeds or the right to make any insurance or bond claims;

5. Any claims with respect to Contractor's obligations of indemnity with respect to claims asserted by third parties; or

6. Any latent deficiencies with the Work or Contractor's fraud.

7-1.11 **CLERICAL ERRORS.** Notwithstanding the provisions of Section 7-1.10 , "Final Payment," of these General Conditions, for a period of three (3) years after Acceptance of the Work, all estimates and payments made pursuant to said Section 7-1.10, are subject to correction for clerical errors in the calculations involved in the determination of quantities and payments. The Contractor and the City agree to pay to the other any sum due under the provisions of this Section 7-1.11, provided, however, if the total sum to be paid is less than $100, no such payment shall be made.

7-1.12 **WARRANTY.** Notwithstanding inspections and Acceptance by the City of Work furnished under the Contract Documents, the Contractor hereby unconditionally guarantees that all materials and equipment furnished will be of good quality and new, that the Work will be free from defects in workmanship and materials and that the Work will conform to the requirements of the Contract Documents. Work not conforming to these requirements, including substitutions not properly approved and authorized, may be considered defective.

This warranty by the Contractor is in addition to any warranties or guarantees required elsewhere in the Contract Documents. This warranty shall be in effect notwithstanding any disclaimers, or limiting or conditional terms contained in such separate warranties furnished by manufacturers or suppliers.

The Contractor hereby agrees to repair or replace any and all Work, together with any other adjacent Work which may be displaced in so doing, that may prove to be not in accordance with the requirements of the Contract or that may be defective in its workmanship or material during the greater of a period of one (1) year after Acceptance of the Work by the City or the period specified in the Special Conditions, without any expense whatsoever to the City, ordinary wear and tear and unusual abuse or neglect excepted.

The Contractor further agrees, that within ten (10) Days after being notified in writing by the Department of any Work not in accordance with the requirements of the Contract Documents or of any defects in the Work, the Contractor will commence and prosecute with due diligence all Work necessary to fulfill the terms of this warranty, and to complete such Work within a reasonable period of time. In the event Contractor fails to comply, it does hereby authorize the Department to proceed to have such Work done at the Contractor's expense and the Contractor will honor and pay the cost and charges therefore upon demand. The Department shall be entitled to all costs and expenses, including reasonable attorneys' fees, necessarily incurred upon the Contractor's refusal to honor and pay the above costs and charges.

All warranties set forth in the Contract Documents shall be deemed cumulative and not alternative or exclusive. Nothing contained in this section shall be construed to establish a period of limitation with respect to any other obligation, which Contractor has under the Contract Documents or under any separate warranty or guaranty required thereby. The establishment of a

specific warranty period relates only to the specific obligation of Contractor to correct defective Work, and it has no relationship to the time within which its obligation to comply with the Contract Documents or applicable provision of law may be sought to be enforced, nor to the time within which proceedings may be commenced to establish Contractor's liability with respect to its obligations other than specifically to correct the Work. Without limiting the foregoing, it is understood and agreed that Contractor shall remain responsible for latent defects with its work, regardless of the expiration of any warranty period set forth in the Contract Documents.

7-1.13 **WARRANTY OF TITLE.** No material, supplies, or equipment for the Work under this Contract shall be purchased subject to any chattel mortgage, security agreement, or under a conditional sale or other agreement by which an interest therein or any part thereof is retained by the seller or supplier. The Contractor warrants good title to all material, supplies, and equipment Installed or incorporated in the Work and agrees upon completion of all Work to deliver the Premises, together with all improvements and appurtenances constructed or placed thereon by it, to the City free from any claim, liens, security interest, or charges, and further agrees that neither the Contractor nor any person, firm, or corporation furnishing any materials or labor for any Work covered by this Contract shall have any right to a lien upon the Premises or any improvement or appurtenances thereon. Provided, that this shall not preclude the Contractor from Installing metering devices and other equipment of utility companies, the title of which is commonly retained by the utility company. In the event of the Installation of any such metering device or equipment, the Contractor shall advise the City as to the legal owner thereof. Nothing contained in this paragraph, however, shall defeat or impair the right of such persons furnishing materials or labor under any bond given by the Contractor for their protection or any rights under any law permitting such persons to look to funds due the Contractor in the hands of the City.

The provisions of this paragraph shall be inserted in all subcontracts and material Contracts, and notice of its provisions shall be given to all persons furnishing materials for the Work when no formal Contract is entered into for such materials.

[END OF GENERAL CONDITIONS]

SUPPLEMENTAL CONDITIONS

Project: Spare Substation Transformer Civil Construction

Scope of Supplemental Conditions

1. The Work shall be performed in accordance with the General Conditions and Department Standards, except as the General Conditions may be modified by the following additional City Standards, incorporated herein by this reference, if so indicated.

	COMMUNITY DESIGN GUIDELINES 311 Vernon Street, Roseville, CA 95678
X	SPECIFICATIONS FOR COMMERCIAL CONSTRUCTION (ELECTRIC) 2090 Hilltop Circle, Roseville, CA 95747
	PARKS CONSTRUCTION STANDARDS 316 Vernon Street, Suite 400, Roseville, CA 95678
	DESIGN AND CONSTRUCTION STANDARDS 311 Vernon Street, Roseville, CA 95678
	OTHER

Above documents are available at: www.roseville.ca.us.

2. Numbering in these Supplemental Conditions conforms to that in the General Conditions. The existence of a section in these Supplemental Conditions means that the corresponding section in the General Conditions is modified in some respect. Unless otherwise specified, the modified General Condition is deleted entirely and the provisions of these Supplemental Conditions are substituted.

XXV. SECTION 1. DEFINITIONS AND TERMS

1-1.24 **DEPARTMENT.** Section 1-1.24 of the General Conditions is amended to include the following:

> The Department for Contract Administration is the Electric Department of the City of Roseville.

XXVI. SECTION 2. CONTROL AND SCOPE OF THE WORK

2-1.08 **SUBMITTALS.** Section 2-1.08 of the General Conditions is amended to include the following:

The time allowed for review of each submittal is 5 Days after receipt of the submittal by the Director.

XXVII. SECTION 3. CHANGES IN THE WORK

There are no amendments to the General Conditions.

XXVIII. SECTION 4. CONTROL OF MATERIALS

There are no amendments to the General Conditions.

XXIX. SECTION 5. LEGAL RELATIONS AND RESPONSIBILITY

5-1.14 **AIR POLLUTION CONTROL AND ASBESTOS.** Section 5-1.14 of the General Conditions is amended to include the following:

To the best of the City's knowledge, asbestos is not present in the vicinity of the Project. Additional information shall be made available to Contractor upon request.

XXX. SECTION 6. PROSECUTION AND PROGRESS

6-1.04 **PROGRESS SCHEDULE.** Section 6-1.04F of the General Conditions is amended to include the following:

Progress schedules showing project completion dates more than_____Days earlier than specified in Section 6-1.07 shall be rejected.

6-1.07 **TIME OF COMPLETION.** Section 6-1.07 of the General Conditions is amended to include the following:

The Contractor shall begin Work within 5 business days after receiving a Notice to Proceed and shall diligently prosecute the Work to completion. The Work shall be completed within 65 business days of the Notice to Proceed.

If landscaping plants require an establishment period, that period will be 60 calendar days. Start of the establishment should be as outlined in the Specifications.

6-1.08 **LIQUIDATED DAMAGES.** Section 6-1.08 of the General Conditions is amended to include the following:

The amount of Liquidated Damages is the sum of $ 500 per Day.

XXXI. SECTION 7: ACCEPTANCE AND PAYMENT

There are no amendments to the General Conditions.

[END OF SUPPLEMENTAL CONDITIONS]

SPECIFICATIONS

SPARE SUBSTATION TRANSFORMER CIVIL CONSTRUCTION SPECIFICATION

TABLE OF CONTENTS

1. SCOPE OF WORK

2. GENERAL PROVISIONS

3. DRAWING LIST

4. EXISTING SITE CONDITIONS

5. CONSTRUCTION SURVEYING

6. SITE PREPARATION AND GRADING

7. EARTHWORK AND COMPACTION

8. EXCAVATION AND BACKFILLING FOR TRENCHES AND FOUNDATIONS

9. UNDERGROUND CABLE CONDUITS AND TRENCHES

10. GROUNDING SYSTEM

11. REINFORCED CONCRETE FOUNDATIONS

12. CAST-IN-PLACE CONCRETE

13. CRUSHED ROCK SURFACING

14. AGGREGATE BASE

15. EROSION AND SEDIMENT CONTROL

1. SCOPE OF WORK

1.1 This specification covers the labor, supervision and materials required for the following projects:

1.1.1 Construct a concrete foundation for the 60/12-kV transformer at Fiddyment Substation. This project consists of the following: construction of a new reinforced concrete foundation, installation of underground electrical conduits, grounding and grounding pigtails as shown on drawings and as needed.

1.1.2 Expand the substation transformer oil spill containment pit at Sierra Vista Substation. This project consists of the following: construct a new oil spill containment pit adjacent to an existing pit; intertie the new and existing containment pits; redirect conduit, grounding and grounding pigtails as shown on drawings and as needed.

1.2 Work Included: Contractor shall perform all labor, coordination, supervision, surveying, inspection, site, and laboratory testing that is required to construct the needed items. All labor, material, testing and associated construction costs are the responsibility of the Contractor unless specifically stated otherwise.

The principal components of the work include, but are not limited to the following:

1.2.1 Establish the reference and boundary lines.

1.2.2 Protect nearby substation equipment from damage during demolition and construction.

1.2.3 Construct concrete foundations for the new equipment as shown on the drawings

1.2.4 Furnish and install underground low voltage control wiring conduits, junction boxes, and reconfigure existing conduits as shown on drawings.

1.2.5 Repair substation grounding system as necessary for excavation and construction of concrete foundation.

1.2.6 Remove and dispose of all surplus materials including surplus excavated materials from sites.

1.2.7 Extend/modify the existing concast trench system as shown on the drawings.

1.2.8 Install new grounding and grounding pigtails as shown on the drawings.

1.2.9 Supply and implement necessary BMP’s for erosion and sediment control.

1.3 This specification shall be used together with the following:

1.3.1 Construction drawings listed in Section 3.

1.3.2 The Supplemental Conditions.

1.3.3 Roseville Electric Specifications for Commercial Construction.

1.3.4 Other standard specifications.

1.3.5 General Conditions for Buildings and Grounds.

In case of any conflicts between the requirements stated above, the order of precedence shall be as follows:

A. Construction drawings listed in Section 3 (highest)

B. The Supplemental Conditions.

C. This Specification.

D. Other standard specifications.

E. General conditions for Buildings and Grounds.

2 GENERAL PROVISIONS

2.1 Contractor shall examine the site and determine the amount, nature and difficulty of the proposed work. Contractor shall evaluate the requirements of the plans, specifications, bid package and existing conditions and bid accordingly. Contractor shall satisfy himself/herself of the soil conditions prior to bidding this project. The contract price shall be based on a lump sum basis.

2.2 If there is any doubt as to the true meaning of any part of the plans, specifications, or the contract documents or if discrepancies in or omissions from the drawings or specifications are found, a written request should be made to the City for interpretation. No payment will be made to the Contractor because of error, negligence or failure to become familiar with the existing conditions or requirements of the plans, specifications and bid package.

2.3 The safety of all materials and labor used in this project is left solely to the Contractor. Any loss due to weather, acts of God, vandalism, theft, poor workmanship, or any other loss is the responsibility of the Contractor, and it is assumed to be part of this bid and bid price. City will not be responsible for the loss of any material and/or labor.

2.4 Appropriate tarps and covers shall be used to protect all open trenches, excavations and removed materials that are planned to be used for backfill from wind, rain and other weather conditions.

2.5 Underground Service Alert (USA) must be called before any digging is started. The phone number of USA is 1-800-642-2444. There are existing underground installations in the working area including electrical power cables installed by

the City, water and sewer lines, gas and telephone facilities. The as-built drawings are available for inspection at the Electric Department. These drawings are not exact and the Contractor agrees to hold the City harmless for any errors that may be on the plans or for any damage that the Contractor may do to existing facilities due to the plans. Any damage to existing underground facilities including the electrical power cables or to the conduit system done by the Contractor is the complete responsibility of the Contractor. There are existing underground conductors energized at 12,000 volts on and adjacent to these sites.

2.6 There are existing exposed 230-kV and 60-kV energized conductors above the working areas at Fiddyment Substation, and existing exposed 60-kV energized conductors above the working areas at Sierra Vista Substation. All work under these exposed conductors shall be restricted at ground level only. Outage and clearance must be pre-arranged with Roseville Electric before working in close proximity to the live conductors. Overhead conductors will not be removed to allow access for drilling equipment. Drilling equipment must be of a height as to not interfere with or damage overhead conductors.

2.7 All work inside the existing energized Sierra Vista Substation and the Fiddyment Substation will be under the supervision of City of Roseville Electric Department's representative to ensure all relevant safety procedures are followed.

2.8 If work is performed within 10 feet of normally energized equipment, suitable type of protective clothing shall be used by all persons per specification 2.9 below. The 10 feet is not the reach distance. It is measured as a footprint with a 10-foot perimeter around all normally energized equipment including wire, overhead line, bus and underground cable. Inside this perimeter, approved FR protective clothing shall be worn. When working at ground level only in an area without any aboveground energized conductors, if the work does not dig in or expose any underground live cables, the FR clothing requirement may be waived with the approval from Roseville Electric site supervisor or Engineer.

2.9 When working within the 10-foot perimeter of energized equipment as defined by 2.8 above, no clothing made from acetate, nylon, polyester, and rayon alone or in blends shall be worn. Clothing or underwear worn next to the skin shall be made of FR material or natural fibers. Caution – some of the new synthetic materials melt at temperatures as low as 140 deg. C. Personnel that may be exposed to an electric arc shall wear the FR shirt rated at 8 ATPV over 100% cotton T-shirt in conjunction with FR pants rated at 8 ATPV. Worn and threadbare denim pants that do not have the ignition or

protective level required shall not be worn. The FR shirt sleeves shall be rolled down and secured at the wrist when exposed to the potential thermal hazard area.

2.10 Contractor shall coordinate and comply with the statutory requirements of all relevant authorities for the due and lawful prosecution of the work. The contractor shall be liable for all monetary fines assessed during construction due to non-compliance on the part of the contractor and subcontractors.

2.11 Unless otherwise approved by the Engineer, the normal working hours shall be limited to Monday through Friday, excluding City's holidays, between 7 a.m. and 3:30 p.m.

2.12 Contractor shall preserve the existing landscape surrounding the substation site. Any damage done to the landscaping in the surrounding area by the Contractor shall be repaired to the City's satisfaction at the cost of the Contractor. This cost is assumed to be part of this bid and bid price.

2.13 Except as otherwise provided in Section 2.14, Contractor shall furnish all materials, utilities, electrical power, supplies, tools, construction equipment, temporary traffic facilities, and all items of consumable nature that are required to complete the work.

2.14 The following lists the items that will be furnished by the City:

2.14.1 Anchor Bolts for the 60/12kV transformer at Fiddyment Substation

2.15 A mandatory prebid meeting will be held in accordance with meeting details posted on the Public Purchase website which will include an inspection of the project sites. FR clothing per sections 2.8 and 2.9 shall be required for the on-site inspection.

2.16 **Contractor Submittals and Qualification-** Along with the bid submittal, contractor shall provide a list of substation projects for Electric Utilities only that have been completed in last fifteen years. The project list shall include scope of work, total contract amount, change orders and number of weeks to complete the entire project. The client list shall include the name, address and contact phone numbers of all companies for which the contractor has previously built related projects. **Contractor and its foreman or supervisor assigned for this project must have performed construction projects in at least three electric substations at 60- kV or above, during the last fifteen years. Please identify the name and location of your three most recent electric substation projects. Bids will be rejected by any Contractor that does not meet these requirements/qualifications.**

2.17 **Time of Completion:** The Contractor shall perform all specified work within the following number of days after the date on the Notice to Proceed.

2.17.1 Work at Fiddyment Substation shall take place approximately between early July and late August 2026:

Begin Site Construction	5 calendar days
Transformer Foundation	45 calendar days
Complete all work	60 calendar days

2.17.2 Work at Sierra Vista Substation shall take place approximately between late August and late September 2026:

Begin Site Construction	5 calendar days
Containment Pit Extension	30 calendar days
Complete all work	35 calendar days

2.18 **Prevailing Wages and DIR Registration Notice -** A portion of the services described herein are for publicly funded projects, considered "public works" as defined by California Labor Code Section 1720 et seq. Any Contractor awarded a contract as the result of this bid shall be responsible for compliance with all applicable prevailing wage laws, as well as any and all applicable state or federal wage laws, for services performed under any resulting contract. Fee schedules must differentiate hourly rates for public works and private development projects and be consistent with applicable prevailing wage requirements.

Provide documentation verifying that your firm and any sub-consulting firm is registered with the Department of Industrial Relations (DIR), including the Public Works Contractor (PWC) Registration Number for all firms.

Consultants are hereby notified that this agreement and task agreements hereunder are, as applicable, subject to compliance monitoring and enforcement by DIR.

2.19 **Mitigation Monitoring and Reporting –**

Mitigation Measure CR-1 (Previously Unidentified Cultural Resources)

(a) Construction shall stop if potential cultural resources are encountered. It is possible that previous activities have obscured surface evidence of cultural resources. If signs of an archeological site, such as any unusual amounts of stone, bone, or shell, are uncovered during grading or other construction activities, work 7 shall be halted within 100 feet of the find and the Roseville City Manager's Office shall be notified. A qualified archeologist shall be consulted for an on-site evaluation. If the site is or appears to be eligible for listing in state or federal registers, additional mitigation, such as further testing for evaluation or data recovery, may be necessary.

(b) In the event resources are discovered, the City shall request a qualified archaeologist assess the find, and determine whether the resource requires further study. Any previously undiscovered resources found during construction should be recorded on appropriate Department of Parks and Recreation (DPR) 523 forms and evaluated for significance under all applicable regulatory criteria.

(c) No further grading shall occur in the area of the discovery until the City approves the measures to protect the resources. Any archaeological artifacts recovered as a result of mitigation shall be donated to a qualified scientific institution approved by the Lead Agency where they would be afforded long-term preservation to allow future scientific study.

Mitigation Measure CR-2 (Previously Unidentified Paleontological Resources)

If substantial fossil remains (particularly vertebrate remains) are discovered during earth-disturbing activities on the project site, activities will stop immediately until a state-registered professional geologist or qualified professional paleontologist can assess the nature and importance of the find and a qualified professional paleontologist can recommend appropriate treatment. Treatment may include preparation and recovery of fossil materials so that they can be housed in an appropriate museum or university collection and may also include preparation of a report for publication describing the finds. The applicant will be responsible for ensuring that

recommendations regarding treatment and reporting are implemented.

Mitigation Measure CR-3 (Inadvertent Discovery of Human Remains)

If human remains are discovered during any phase of construction, including disarticulated or cremated remains, the construction contractor shall immediately cease all ground-disturbing activities within 100 feet of the remains and notify Jessica Lynch, Environmental Coordinator, City of Roseville Development Services.

In accordance with California State Health and Safety Code Section 7050.5, no further disturbance shall occur until the following steps have been completed:

(a) The County Coroner has made the necessary findings as to origin and disposition pursuant to Public Resources Code (PRC) § 5097.98.

(b) If the remains are determined by the County Coroner to be Native American, the NAHC shall be notified within 24 hours, and the guidelines of the NAHC shall be adhered to in the treatment and disposition of the remains. It is further recommended that a professional archaeologist with Native American burial experience conduct a field investigation of the specific site and consult with the Most Likely Descendant (MLD), if any, identified by the NAHC. As necessary and appropriate, a professional archaeologist may provide technical assistance to the MLD, including but not limited to, the excavation and removal of the human remains.

3 DRAWING LIST

325C1-01	Fiddyment Substation Vicinity and Site Location
325C1-03	Fiddyment Substation Site and Grading Plan
325C1-26	Fiddyment Substation Grounding Plan
326C1-01A	Fiddyment Substation Transformer and Switchgear Layout
326C1-04	Fiddyment Subsbation Spare Transformer Foundation and Conduit Plan
326C1-05	Fiddyment Substation Transformer Pad and Sump Pump Details

	Fiddyment Substation Geotechnical Report
395C1-00	Sierra Vista Substation Location
395C1-02	Sierra Vista Substation Electrical Plan
395C2-01	Sierra Vista Substation Precise Grading Plan
395C4-04	Sierra Vista Substation Transformer Foundation Details
395C5-01	Sierra Vista Substation Conduit Plan
395C7-01	Sierra Vista Substation Grounding Plan
	Sierra Vista Substation Geotechnical Report

4 EXISTING SITE CONDITIONS

4.1 Existing underground electrical cables energized at 12,000 volts and other control cables are on both sites. Existing overhead electrical cables energized at 60,000 volts are on both sites, and existing overhead electrical cables energized at 230,000 volts are on site at Fiddyment Substation.

4.2 The existing sites have been graded. After modification work for the project, all area must be restored to the original grading.

4.3 Soils investigation has been carried out at Fiddyment Substation and Sierra Vista Substation.

4.4 Topographic Survey has not been conducted on the sites.

4.5 A copy of the Geotechnical Report is included in this manual for Fiddyment Substation and Sierra Vista Substation.

5. CONSTRUCTION SURVEYING

5.1 The Contractor shall lay out all proposed improvements in accordance with the plans and these specifications.

5.2 The Contractor shall layout all proposed improvements from lines established by the drawings.

6. SITE PREPARATION AND GRADING

6.1. Contractor shall prepare the site in accordance with the drawings and these specifications. Site preparation shall include clearing of existing debris, grading and sub-grade preparation. All trench work must be inspected by Roseville Electric before backfilling.

6.2. Sub-grade preparation shall include areas that will receive crushed rock and aggregate base.

6.3. The area within the limits of the substation site shall be cleared and graded.

6.4. Clearing shall consist of removal of debris, vegetation, waste, or other unacceptable subgrade material.

6.5. Grading shall include construction of embankment, cutting, shaping, blading, and rolling and all other operations necessary to achieve the proposed elevations, slope and compaction.

6.6. The intent of the grading information shown on the drawings is to provide for a free draining surface.

6.7. Grade tolerance for sub-grade and cut or fill slopes shall be plus or minus one inch from the finished elevation shown on the drawings. However, the tolerance shall not create small pools or otherwise affect the intent of the free draining surfaces.

7. **EARTHWORK AND COMPACTION**

7.1. Immediately prior to surfacing, the sub-grade shall be shaped to the grade and cross section indicated on the drawings. The top six inches of the sub-grade shall be compacted to 95 percent of maximum density at optimum moisture content as determined by ASTM D698 when that test is appropriate, or to 70 percent relative density as determined by ASTM D4253 and D4254 when these tests are appropriate. This operation shall include any scarifying, reshaping, and wetting required to obtain proper compaction. Soft, organic, and otherwise unsuitable material shall be removed from the sub-grade and replaced with suitable material approved by the Engineer.

7.2. Any deviation of the sub-grade surface in excess of one inch as indicated by a sixteen-foot straightedge, or template cut to typical section, shall be corrected by loosening, adding or removing material, reshaping, and recompacting.

7.3. In cut areas and in areas of less then six inches of compacted fill, the top six inches shall be scarified and thoroughly mixed by discing or blading and watered or aerated as necessary to achieve optimum moisture content. It shall be compacted to 95% relative density.

7.4. Where compacting earth materials is required, materials shall be deposited in horizontal layers and compacted as specified.

7.5. The soil compaction tests shall be performed by an independent testing laboratory approved by the Engineer. The laboratory shall be retained by the Contractor and all costs for laboratory services shall be paid by the Contractor.

8. **EXCAVATION AND BACKFILL FOR TRENCHES AND FOUNDATIONS**

8.1. Excavation, backfill, and compaction for trenches and structures shall be in accordance with the drawings and these specifications

8.2. All excavation shall be to the lines and grades required for foundations, conduits, grounding and other facilities. Excavation shall be large enough to allow form removal and working space to backfill and compact.

8.3. The bottom of excavations for foundations shall be a smooth plane with the top six inches compacted to 95 percent relative density. The bottom of drilled holes shall be free of loose or disturbed soil.

8.4. Any over excavation and resultant backfilling, compacting, or concreting will be considered as incidental work and included in the bid prices.

8.5. Backfill shall be free of organic matter, large rocks or any other deleterious material. Rocks or clods larger than 1-1/2 inches in diameter will not be allowed within 6 inches of any conduit or ground wire. All backfill will be subject to the approval of the Engineer. Backfill shall be watered and aerated to an optimum moisture content in successive lifts not to exceed six inches and compacted to relative density of 95 percent.

8.6. No backfill shall be made until the work to be covered has been approved by the Engineer. External back filling materials must be approved by the Engineer before use.

8.7. Contractor shall locate, protect, shore, brace, support, and maintain all existing underground pipes, conduits, drains, and other underground construction which may be uncovered or otherwise affected by the work.

8.8. Existing improvements and underground facilities have been plotted from the best information available. However, this information is not complete or accurate. There may be additional existing facilities. The utility information shown on the plans shall not relieve the Contractor of the responsibility of using caution and good judgment. It is the responsibility of the Contractor to ascertain the exact location of all existing facilities and to avoid damaging them.

8.9. Existing improvements that are damaged shall be replaced to an original or better condition. All repair and restoration shall be to the satisfaction of the City of Roseville.

8.10. Excavation by machinery shall be approved by the Engineer or City's Electric Department representative in consideration of the safe electrical working clearances and close proximity to the existing energized conductors and underground conduits. The contractor must pot-hole and locate the exact location of the underground 12-kV and 60- kV

conduits before any excavation and drilling near the cable's location identified by the Electric Department as part of the USA requirements.

8.11. All work shall be carried out effectively and tidily to ensure minimum inconvenience to the substation operation. All drains and gullies shall be kept clear of excavation materials at all times.

9. **UNDERGROUND CABLE CONDUITS AND TRENCHES**

9.1. The underground power cable and control cable conduits and trench system shall be installed as shown on the drawings and the requirements stated in the City of Roseville Specifications for Commercial Construction.

9.2. Power conduits and couplings shall be minimum Schedule 40 PVC. The solvent used shall be in accordance with ASTM-2564 for PVC. All conduits shall be blown free of water and debris. A 1/2" diameter nylon pull rope shall be provided for each conduit and shall comply with Page 2.1 of Roseville Electric's Construction Standards.

9.3. All conduits shall be proven by a proving mandril equal to 80 percent of the conduit diameter. The proving tests shall be witnessed and approved by the Engineer or his representative.

9.4. Conduits that are encased in concrete shall be encased with a 3/8" aggregate concrete mix with a seven inches slump and with a normal strength of 25800lbs. The encasement shall cover at least three inches on any side of the conduits. All conduit outlets must be set perfectly vertical or inclined at an angle at the bottom of the trench to the direction as showed on the drawings.

10. GROUNDING SYSTEM

10.1. Contractor shall locate the existing grounding conductors as shown on the Drawings. The contractor shall provide the grounding conductors, welding materials and perform the connections to the ground grids.

10.2. The Contractor shall install ground rods, grounding conductors and pig-tails for the equipment structures as shown on the Drawings.

10.3. All grounding grid conductors and rods shall be connected by exothermal welding, e.g. Cadweld or approved equivalent.

10.4. If the location of any concrete foundations or piers conflicts with the existing grounding conductors, the location of the foundations shall have priority. The grounding conductors shall be rerouted so that they do not pass through any

concrete foundation.

10.5. The reconfiguration of any grounding conductors to avoid concrete foundations shall be approved by the Engineer or his representative.

11. **REINFORCED CONCRETE FOUNDATIONS**

11.1. The Contractor shall construct the reinforced concrete foundations in accordance with the drawings and these specifications.

11.2. The foundation shall be accurately located, sized and plumbed. The maximum variation of any foundation from its designed location shall not be more than two (2) inches. The variation of the top surface of all foundations shall not exceed 1/8 inch in 12 feet. All edges shall be chamfered. The Contractor shall employ a licensed surveyor to stake the foundation locations and to check the tolerance of the top surface of the foundations.

11.3. The surplus excavated materials shall become the property of the Contractor and shall be removed from the site. All excavation shall be made to the lines and grades shown on the drawings. The bottom surface of the excavation shall be free of loose or disturbed material. Any over excavation and resulting backfilling, compacting, or concreting shall be considered incidental. No separate payment will be made.

11.4. No classification of excavated materials will be made except for identification purposes. Foundation excavation shall include the removal and subsequent handling of all materials encountered in excavating the foundation to the depth required.

11.5. Blasting will not be permitted on the site.

11.6. Control joints shall be placed on foundations as shown on the drawings. The Burke "Key Kold Joint" compound or equal shall be used.

11.7. Concrete work for foundation shall conform to the requirements of the section entitled "Cast-in-Place Concrete" and to these additional requirements. Concrete shall reach a minimum compressive strength of 4,000psi in 28 days unless otherwise specified on the drawings. For each cement truck load only, Contractor shall employ an independent testing laboratory to take concrete samples at the job site and to perform compression testing at 14 and 28 days for compliance with these specifications. One test shall be performed on each batch of concrete. The testing laboratory shall be

approved by the Engineer.

11.8. All water and loose materials shall be removed from the holes before any concrete is placed. Foundation holes shall be dry except as specified hereinafter. **No concrete shall be poured without prior inspection by City Engineer**.

11.9. Concrete shall be placed with a tremie or funnel to prevent segregation and the top six feet shall be rodded or vibrated to provide a dense mass free of voids. As placed, the concrete shall have a slump between 2-1/2 and 4 inches. During the filling of the holes, if water begins to accumulate on the top of the concrete, the amount of water in succeeding batches shall be reduced. Should there be an accumulation of scum or laitance on the top of the concrete, it shall be removed and additional concrete shall be placed to bring the foundation back to the proper elevation.

11.10. When the concrete pour is started, it shall be completed in a continuous process. A sufficient quantity of concrete to fill the foundation shall be in delivery trucks at the foundation site when the first concrete is poured. If the pouring of any foundation is suspended for more than 30 minutes before the foundation is completed, laitance and water shall be removed from the joint surface and the joint surface shall be coated with epoxy bonding compound before concreting is resumed. In order to provide for an emergency stoppage, bonding compound shall be at the site before the concreting of foundations is started.

11.11. Foundations shall be reinforced as indicated on the drawings and all reinforcements shall be installed and secured to prevent shifting during the placement of concrete. Anchor bolt cages for steel pole foundations shall be installed plumb and within 1/8 inch of their specified plan location. The upper portion of the foundations shall be formed where indicated on the drawings. Shores and frames shall remain in place a minimum of two days and may be removed only when the concrete has reached a strength capable of supporting its weight safely. Each foundation shall be cured for at least 7 days by continuous saturation with water or the use of membrane curing compound as specified in the section entitled "Cast-in-Place Concrete" unless otherwise specified.

11.12. Records shall be kept by the Contractor indicating the exact volume of each foundation excavated and this volume shall then be compared to the volume of concrete actually placed in each foundation. A lesser amount of concrete placed than calculated may indicate faulty foundation construction. In the event of such an occurrence, the Engineer shall be notified, and immediate remedial action shall then be taken by the Contractor.

11.13. Concrete shall not be deposited under water except with specific permission of the Engineer. For concrete deposited

under water, the limiting requirements shall be adjusted to provide not more than six inches of slump and to increase the cement factor by one sack per cubic 14 yard. Any extra charges for these changes by the concrete supplier shall be borne by the Contractor. Underwater concrete shall be placed through tremies. The tremies shall be equipped with a tremie seal at the lower end and a hopper at the upper end. The tremie shall be watertight and large enough to allow a free flow of concrete. After the flow of concrete is started, the lower end of the tremie shall be kept below the surface of the deposited concrete. Agitation of the deposited concrete shall be avoided. When necessary to move laterally, the tremie shall be lifted free of the concrete and lowered vertically at the new location. The entire mass of concrete shall be placed as quickly as possible so that it will flow into place without the necessity of horizontal shifting below water. The water shall be quiescent when concrete is deposited therein. After placing, the ground water level in the area adjacent to the foundation shall be kept static until the concrete has taken its initial set.

11.14. The anchor bolt cage and the rebar cage shall be clean, dry and free of rust, dirt and oil. Anchor bolt cage may be welded to hold its shape. The rebar cage shall NOT be welded. No welds will be permitted for the rebar cage.

11.15. Any Anchor bolts for the foundations supplied by the contractor shall conform to ASTM A-307 and be galvanized in accordance with ASTM A-153.

12. CAST-IN-PLACE CONCRETE

12.1. General. This section covers cast-in-place concrete and includes reinforcing steel, forms, finishing, curing, grouting, and other appurtenant work. Contractor shall submit concrete mix specifications prior to ordering to the City Engineer in order to confirm it complies with these specifications.

Cast-in-place concrete shall be in accordance with the latest applicable requirements of the Federal Specifications, ACI, ASTM, and CRSI, except as modified by these specifications.

12.2. Materials. Materials shall be in accordance with these requirements:

Cement:	ASTM C150, Type I & II
Fine Aggregate:	Clean natural sand, ASTM C-33
Coarse Aggregate:	Crushed stone, washed gravel, or other acceptable inert granular material conforming to ASTM C-33. Maximum size of aggregate to be 3/4".

Water:	Clean and free from deleterious substances.
Air-entraining Agent:	ASTM C260
Plasticizing Retarder:	ASTM C494, Type B or D
Plasticizer:	ASTM C494, Type A
Reinforcing Steel Bars:	ASTM A615-85, Grade 60
Forms:	
Plywood:	Product Standard PSI, waterproof, resin-bounded, exterior type Douglas Fir.
Lumber:	Straight, uniform width and thickness, and free from knots, offsets, holes, dents, and other surface defects.
Chamfer Strips:	Clear pine, surface against concrete shall be planed.
Form Oil:	Light colored paraffin oil or other acceptable non-staining material.

13. CRUSHED ROCK SURFACING

13.1. Contractor shall furnish and restore crushed rock in accordance with the drawings and these specifications. Rock shall be washed and a uniform size of 3/4-inch with 100% fractured faces. The rock shall be clean and free of deleterious materials for its intended use. The rock surfacing shall have a minimum thickness of six inches or as indicated on the drawings.

13.2. Prior to applying the crushed rock surfacing, the Contractor shall apply weed eradicator and soil fumigant in strict accordance with the manufacturer's instructions. Contractor is cautioned to apply weed eradicator and soil fumigant only to the crushed rock surfacing areas and to refrain from applying such material when conditions may cause drifting to areas which are not to be treated.

13.3. The rock surfacing shall be smooth, hard and tight and free draining. Rock shall be spread evenly without humps or depressions.

14. AGGREGATE BASE

14.1. Contractor shall furnish, place and compact aggregate base in accordance with the drawings if required for touch up area. The materials and application of aggregate base shall comply with Section 26 of the CALTRANS "Standard Specifications", latest edition, and these specifications.

14.2. The subgrade shall be prepared in accordance with Section 7, Earthwork and Compaction.

14.3. The aggregate base shall be compacted, trimmed and shaped by blading and rolling to produce a hard and tight surface. The finish surface shall be true to grade and free of segregation, irregularities, depression, or loose material. The compacted aggregate base shall have a uniform thickness of six (6) inches. The surface of the aggregate base shall not vary more than 0.05-foot above or below the grades shown on the drawings. The relative compaction for aggregate base shall not be less than 95 percent. The maximum aggregate size shall be 3/4-inch.

15. EROSION AND SEDIMENT CONTROL

15.1. Contractor shall supply and implement all necessary Best Management Practices (BMP’s) in order to control erosion and prevent sediment from entering the stormwater system.

15.2. Measures shall include but not limited to the following:

15.2.1. Geotextiles and mats.

15.2.2. Velocity dissipation devices.

15.2.3. Silt fence.

15.2.4. Sediment basin or trap.

15.2.5. Fiber rolls.

15.2.6. Street sweeping and vacuuming.

15.2.7. Sand bag or straw bale barrier.

15.2.8. Storm drain inlet protection.

15.2.9. Biofilter bags.

15.2.10 Wind erosion control by applying water suppressants.

15.2.11 Entrance/outlet tire wash or wash station for necessary equipment.

DRAWINGS

Project: Spare Substation Transformer Civil Construction

DRAW

TEXT OF AB 626

XXXII. Assembly Bill No. 626

CHAPTER 810

An act to add and repeal Section 9204 of the Public Contract Code, relating to public contracts.

[Approved by Governor September 29, 2016. Filed with Secretary of State September 29, 2016.]

LEGISLATIVE COUNSEL'S DIGEST

AB 626, Chiu. Public contracts: claim resolution.

Existing law prescribes various requirements regarding the formation, content, and enforcement of state and local public contracts. Existing law applicable to state public contracts generally requires that the resolution of claims related to those contracts be subject to arbitration. Existing law applicable to local agency contracts prescribes a process for the resolution of claims related to those contracts of $375,000 or less.

This bill would establish, for contracts entered into on or after January 1, 2017, a claim resolution process applicable to any claim by a contractor in connection with a public works project. The bill would define a claim as a separate demand by the contractor for one or more of the following: a time extension for relief from damages or penalties for delay, payment of money or damages arising from work done pursuant to the contract for a public work, or payment of an amount disputed by the public entity, as specified.

This bill would require a public entity, defined to exclude certain state entities, upon receipt of a claim sent by registered or certified mail, to review it and, within 45 days, provide a written statement identifying the disputed and undisputed portions of the claim. The bill would authorize the 45-day period to be extended by mutual agreement. The bill would require any payment due on an undisputed portion of the claim to be processed within 60 days, as specified. The bill would require that the claim be deemed rejected in its entirety if the public entity fails to issue the written statement.

This bill would authorize, if the claimant disputes the public entity's written response or if the public entity fails to respond to a claim within the time prescribed, the claimant to demand to meet and confer for settlement of the issues in dispute. The bill would require any disputed portion of the claim that remains in dispute after the meet and confer conference to be subject to nonbinding mediation, as specified. The bill would provide that unpaid claim amounts accrue interest at 7% per annum. The bill would prescribe a procedure by which a subcontractor or lower tier contractor may make a claim through the contractor.

This bill would require the text of these provisions, or a summary, to be set forth in the plans or specifications for any public work which may give rise to a claim. The bill would specify that a waiver of these rights is void and contrary to public policy, except as specified. The bill would also specify that it does not impose liability on a public entity that makes loans or grants available through a competitive application process, for the failure of an awardee to meet its contractual obligations.

By increasing the duties of local agencies and officials, this bill would impose a state-mandated local program.

This bill would, on January 1, 2020, repeal the provision establishing the claim resolution process.

This bill would specify that these provisions constitute a matter of statewide concern.

The California Constitution requires the state to reimburse local agencies and school districts for certain costs mandated by the state. Statutory provisions establish procedures for making that reimbursement.

This bill would provide that, if the Commission on State Mandates determines that the bill contains costs mandated by the state, reimbursement for those costs shall be made pursuant to these statutory provisions.

The people of the State of California do enact as follows:

SECTION 1. Section 9204 is added to the Public Contract Code, to read:

XXXIII. 9204. (a) The Legislature finds and declares that it is in the best interests of the state and its citizens to ensure that all construction business performed on a public works project in the state that is complete and not in dispute is paid in full and in a timely manner.

(b) Notwithstanding any other law, including, but not limited to, Article 7.1 (commencing with Section 10240) of Chapter 1 of Part 2, Chapter 10 (commencing with Section 19100) of Part 2, and Article 1.5 (commencing with Section 20104) of Chapter 1 of Part 3, this section shall apply to any claim by a contractor in connection with a public works project.

(c) For purposes of this section:

(1) ”Claim” means a separate demand by a contractor sent by registered mail or certified mail with return receipt requested, for one or more of the following:

(A) A time extension, including, without limitation, for relief from damages or penalties for delay assessed by a public entity under a contract for a public works project.

(B) Payment by the public entity of money or damages arising from work done by, or on behalf of, the contractor pursuant to the contract for a public works project and payment for which is not otherwise expressly provided or to which the claimant is not otherwise entitled.

(C) Payment of an amount that is disputed by the public entity.

(2) ”Contractor” means any type of contractor within the meaning of Chapter 9 (commencing with Section 7000) of Division 3 of the Business and Professions Code who has entered into a direct contract with a public entity for a public works project.

(3) (A) ”Public entity” means, without limitation, except as provided in subparagraph (B), a state agency, department, office, division, bureau, board, or commission, the California State University, the University of California, a city, including a charter city, county, including a charter county, city and county, including a charter city and county, district, special district, public authority, political subdivision, public corporation, or nonprofit transit corporation wholly owned by a public agency and formed to carry out the purposes of the public agency.

(B) ”Public entity” shall not include the following:

(i) The Department of Water Resources as to any project under the jurisdiction of that department.

(ii) The Department of Transportation as to any project under the jurisdiction of that department.

(iii) The Department of Parks and Recreation as to any project under the jurisdiction of that department.

(iv) The Department of Corrections and Rehabilitation with respect to any project under its jurisdiction pursuant to Chapter 11 (commencing with Section 7000) of Title 7 of Part 3 of the Penal Code.

(v) The Military Department as to any project under the jurisdiction of that department.

(vi) The Department of General Services as to all other projects.

(vii) The High-Speed Rail Authority.

(4) ”Public works project” means the erection, construction, alteration, repair, or improvement of any public structure, building, road, or other public improvement of any kind.

(5) ”Subcontractor” means any type of contractor within the meaning of Chapter 9 (commencing with Section 7000) of Division 3 of the Business and Professions Code who either is in direct contract with a contractor or is a lower tier subcontractor.

(d) (1) (A) Upon receipt of a claim pursuant to this section, the public entity to which the claim applies shall conduct a reasonable review of the claim and, within a period not to exceed 45 days, shall provide the claimant a written statement identifying what portion of the claim is disputed and what portion is undisputed. Upon receipt of a claim, a public entity and a contractor may, by mutual agreement, extend the time period provided in this subdivision.

(B) The claimant shall furnish reasonable documentation to support the claim.

(C) If the public entity needs approval from its governing body to provide the claimant a written statement identifying the disputed portion and the undisputed portion of the claim, and the governing body does not meet within the 45 days or within the mutually agreed to extension of time following receipt of a claim sent by registered mail or certified mail, return receipt requested, the public entity shall have up to three days following the next duly publicly noticed meeting of the governing body after the 45-day period, or extension, expires to provide the claimant a written statement identifying the disputed portion and the undisputed portion.

(D) Any payment due on an undisputed portion of the claim shall be processed and made within 60 days after the public entity issues its written statement. If the public entity fails to issue a written statement, paragraph (3) shall apply.

(2) (A) If the claimant disputes the public entity’s written response, or if the public entity fails to respond to a claim issued pursuant to this section within the time prescribed, the claimant may demand in writing an informal conference to meet and confer for settlement of the issues in dispute. Upon receipt of a demand in writing sent by registered mail or certified mail, return receipt requested, the public entity shall schedule a meet and confer conference within 30 days for settlement of the dispute.

(B) Within 10 business days following the conclusion of the meet and confer conference, if the claim or any portion of the claim remains in dispute, the public entity shall provide the claimant a written statement identifying the portion of the claim that remains in dispute and the portion that is undisputed. Any payment due on an undisputed portion of the claim shall be processed and made within 60 days after the public entity issues its written statement. Any disputed portion of the claim, as identified by the contractor in writing, shall be submitted to nonbinding mediation, with the public entity and the claimant sharing the associated costs equally. The public entity and claimant shall mutually agree to a mediator within 10 business days after the disputed portion of the claim has been identified in writing. If the parties cannot agree upon a mediator, each party shall select a mediator and those mediators shall select a qualified neutral third party to mediate with regard to the disputed portion of the claim. Each

party shall bear the fees and costs charged by its respective mediator in connection with the selection of the neutral mediator. If mediation is unsuccessful, the parts of the claim remaining in dispute shall be subject to applicable procedures outside this section.

(C) For purposes of this section, mediation includes any nonbinding process, including, but not limited to, neutral evaluation or a dispute review board, in which an independent third party or board assists the parties in dispute resolution through negotiation or by issuance of an evaluation. Any mediation utilized shall conform to the timeframes in this section.

(D) Unless otherwise agreed to by the public entity and the contractor in writing, the mediation conducted pursuant to this section shall excuse any further obligation under Section 20104.4 to mediate after litigation has been commenced.

(E) This section does not preclude a public entity from requiring arbitration of disputes under private arbitration or the Public Works Contract Arbitration Program, if mediation under this section does not resolve the parties' dispute.

(3) Failure by the public entity to respond to a claim from a contractor within the time periods described in this subdivision or to otherwise meet the time requirements of this section shall result in the claim being deemed rejected in its entirety. A claim that is denied by reason of the public entity's failure to have responded to a claim, or its failure to otherwise meet the time requirements of this section, shall not constitute an adverse finding with regard to the merits of the claim or the responsibility or qualifications of the claimant.

(4) Amounts not paid in a timely manner as required by this section shall bear interest at 7 percent per annum.

(5) If a subcontractor or a lower tier subcontractor lacks legal standing to assert a claim against a public entity because privity of contract does not exist, the contractor may present to the public entity a claim on behalf of a subcontractor or lower tier subcontractor. A subcontractor may request in writing, either on his or her own behalf or on behalf of a lower tier subcontractor, that the contractor present a claim for work which was performed by the subcontractor or by a lower tier subcontractor on behalf of the subcontractor. The subcontractor requesting that the claim be presented to the public entity shall furnish reasonable documentation to support the claim. Within 45 days of receipt of this written request, the contractor shall notify the subcontractor in writing as to whether the contractor presented the claim to the public entity and, if the original contractor did not present the claim, provide the subcontractor with a statement of the reasons for not having done so.

(e) The text of this section or a summary of it shall be set forth in the plans or specifications for any public works project that may give rise to a claim under this section.

(f) A waiver of the rights granted by this section is void and contrary to public policy, provided, however, that (1) upon receipt of a claim, the parties may mutually agree to waive, in writing, mediation and proceed directly to the commencement of a civil action or binding arbitration, as applicable; and (2) a public entity may prescribe reasonable change order, claim, and dispute resolution procedures and requirements in addition to the provisions of this section, so long as the contractual provisions do not conflict with or otherwise impair the timeframes and procedures set forth in this section.

(g) This section applies to contracts entered into on or after January 1, 2017.

(h) Nothing in this section shall impose liability upon a public entity that makes loans or grants available through a competitive application process, for the failure of an awardee to meet its contractual obligations.

(i) This section shall remain in effect only until January 1, 2020, and as of that date is

repealed, unless a later enacted statute, that is enacted before January 1, 2020, deletes or extends that date.

XXXIV. SECTION 2.
The Legislature finds and declares that it is of statewide concern to require a charter city, charter county, or charter city and county to follow a prescribed claims resolution process to ensure there are uniform and equitable procurement practices.

XXXV. SECTION 3.
If the Commission on State Mandates determines that this act contains costs mandated by the state, reimbursement to local agencies and school districts for those costs shall be made pursuant to Part 7 (commencing with Section 17500) of Division 4 of Title 2 of the Government Code.

CITY OF ROSEVILLE, 230-60KV FIDDYMENT SUBSTATION PROJECT
PHASE 2 EXPANSION

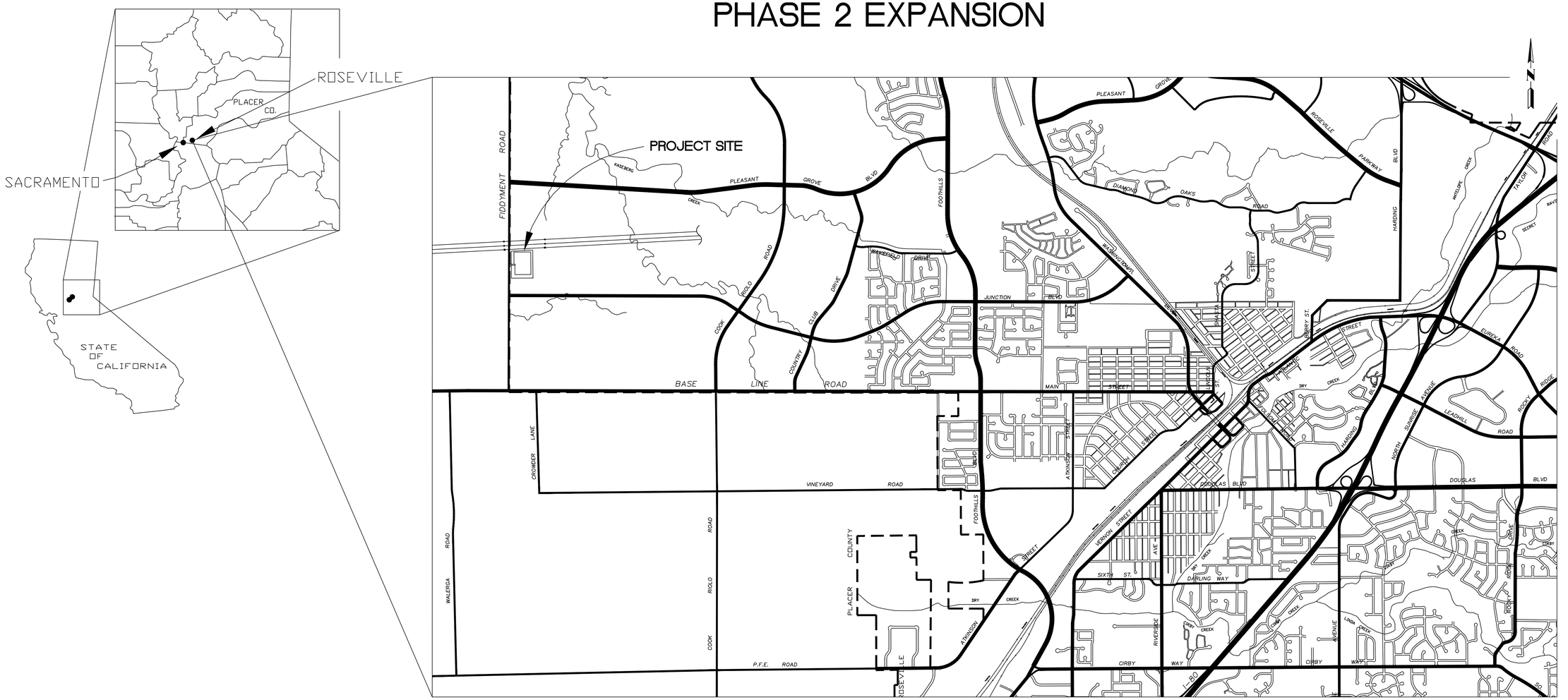

FIDDYMENT SUBSTATION

REV	BY	DATE	DESCRIPTION	TECH	APPR.
1	KB	1/16/04	PHASE 2 EXPANSION	MF	

ELECTRIC DEPARTMENT
(916) 774-5601

TITLE: VICINITY & SITE LOCATION PLAN & DRAWING LIST

ENG. M. FOK	APPR.	SCALE 1"=1500'
DR. J. HANSON		DATE 2/5/98

JOB NO. 944013
ACCOUNT NO. 40001
DRAWING NO. 325C1-01

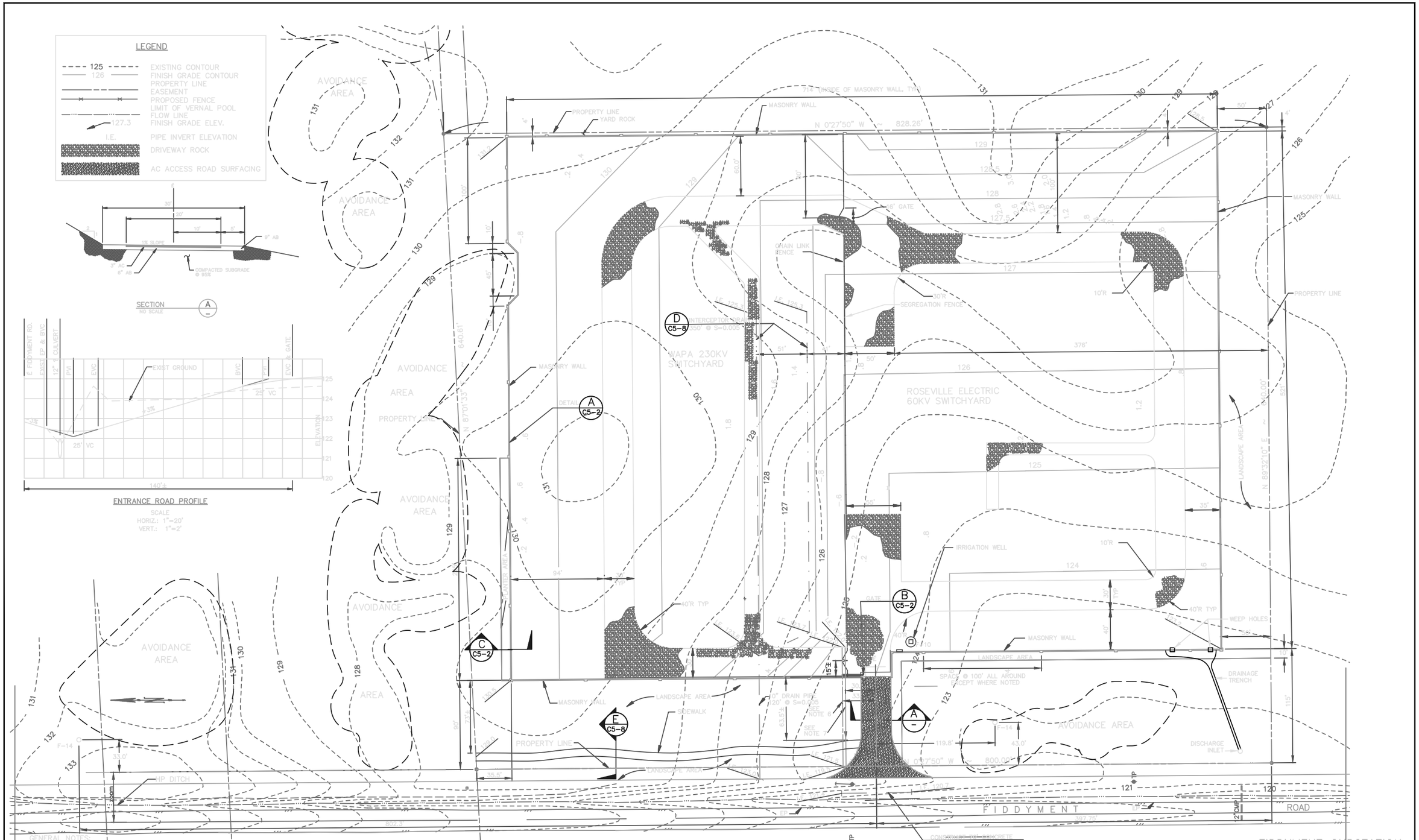
LEGEND
EXISTING CONTOUR
FINISH GRADE CONTOUR
PROPERTY LINE
EASEMENT
PROPOSED FENCE
LIMIT OF VERNAL POOL
FLOW LINE
FINISH GRADE ELEV.
PIPE INVERT ELEVATION
DRIVEWAY ROCK
AC ACCESS ROAD SURFACING
SECTION A
NO SCALE
ENTRANCE ROAD PROFILE
SCALE
HORIZ.: 1"=20'
VERT.: 1"=2'
AVOIDANCE AREA
WAPA 230KV SWITCHYARD
ROSEVILLE ELECTRIC 60KV SWITCHYARD
FIDDYMENT ROAD
MASONRY WALL
PROPERTY LINE
YARD ROCK
CHAIN LINK FENCE
SEGREGATION FENCE
IRRIGATION WELL
LANDSCAPE AREA
SIDEWALK
HP DITCH
DISCHARGE INLET
DRAINAGE TRENCH
WEEP HOLES
CONSTRUCT 36" CONCRETE ENCASED 12" CMP CULVERT
GENERAL NOTES:
1. PROVIDE 6" LAYER CRUSHED YARD ROCK SURFACING WITHIN THE MASONRY WALL LIMITS AND 4 FOOT WIDE STRIP ALONG THE OUTSIDE OF THE EAST WALL.
2. PROVIDE 6" LAYER DRIVEWAY ROCK SURFACING ON ACCESS DRIVEWAYS WHERE SHOWN.
3. ALL DRIVEWAY SURFACING SHALL BE COMPACTED.
4. CRUSHED ROCK YARD SURFACING SHALL NOT BE COMPACTED.
5. MEASUREMENTS TO MASONRY WALL ARE TO INSIDE OF WALL.
6. PLACE 120' x 1" POLYETHYLENE PIPE (AWWA C901) WATER SVC. W/ 36" MIN. COVER. CAP ENDS.
7. PLACE 120' x 4" VCP EXTRA STRENGTH SEWER SERVICE @ S=0.02. SEAL ENDS W/ REMOVABLE STOPPERS.
4 9-15-10 EWR 39 AS BUILT AFP
3 8-31-10 EWR 39 AFP
2 12/18/03 ADJUSTED ROAD ALIGNMENT
1 7/3/96 BID
NO. DATE ISSUED FOR BY
DESIGNED GP
DRAWN GT/PB
CHECKED GP
APPROVED
SCALE 1" = 40'
WARNING
BAR SHOULD MEASURE 1" OR DRAWING IS NOT TO SCALE
CAD REF. R:/22004/2246/46C5-01
LAST EDIT 7/19/96
CITY OF ROSEVILLE INCORPORATED APRIL 10, 1909
RMI
RESOURCE MANAGEMENT INTERNATIONAL, INC.
3100 ZINFANDEL DR. SACRAMENTO, CA 95670
SACRAMENTO - PORTLAND - AUSTIN - PHOENIX - ORLANDO - COLUMBUS - ALBANY - WEST PALM BEACH
CITY OF ROSEVILLE CALIFORNIA
Roseville Electric
FIDDYMENT SUBSTATION
REV BY DATE DESCRIPTION APPR.
SITE AND GRADING PLAN
TITLE
ENG. M. FOK APPR.
DR. J. HANSON
SCALE 1"=40'
DATE 2/5/98
JOB NO. 944013
ACCOUNT NO. 40001
DRAWING NO. 325C1-03

LEGEND:

— — BURIED GROUND CABLE

EQUIPMENT & FENCE GROUND CABLE

GROUND ROD, COPPER, 3/4" ø X 10'-0"

ELECTRICAL CONNECTION

NOTES:

1. SEE SHEET E5-18 FOR GROUNDING DETAILS.
2. MAIN GRID GROUNDING SHALL BE INSTALLED AT A MAXIMUM SPACING OF 45'-0".
3. FENCE GROUNDING SHALL BE INSTALLED AT A MAXIMUM SPACING OF 20'-0".
4. INSTALL 250MCM SOFT DRAWN BARE COPPER GROUND WIRE INSIDE OF THE FULL LENGTH OF EACH TRENCH. GROUND WIRE WILL BE CONNECTED TO THE TRENCH WALL EVERY 20'-0" MINIMUM.
5. THE GROUND CABLE IN THE CABLE TRENCHES SHALL BE CONNECTED TO THE MAIN GRID WITH #4/0 AWG, 19 STRAND BARE COPPER EACH TIME THE TRENCH CROSSES THE GRID
6. INSTALL 250MCM SOFT DRAWN BARE COPPER GROUND WIRE COMPLETELY AROUND THE INSIDE PERIMETER OF ALL MANHOLES. GROUND WIRE TO BE 18" ABOVE THE BOTTOM OF THE MANHOLE AND SHOULD BE CONNECTED TO THE MANHOLE WALL EVERY 2'-0" MINIMUM. GROUND WIRE TO BE CONNECTED TO THE MAIN GRID AT TWO LOCATIONS ON OPPOSITE CORNERS OF THE MANHOLE.
7. ALL GROUND CONDUCTORS TO BE BURIED 18" BELOW GROUND GRADE, NOT INCLUDING 6" OF YARD ROCK EXCEPT WHERE THEY PASS UNDER TRENCHES, DUCT BANKS, ETC. GROUND CONDUCTORS SHOULD PASS UNDER THESE ITEMS BY 6" MINIMUM.

⚠8. ALL GROUND TAILS CONNECT FROM EXISTING GROUND GRID TO 60/12KV TX AND 60/12KV SWITCH-GEAR SHALL BE 500MCM CU., ONLY CADWELL CONNECTORS TO BE USED FOR GROUND GRID CONNECTIONS.

⚠9 FOR PHASE 2 CONSTRUCTION ALL GROUND TAILS SHALL BE 4/0 AWG, 19 STRAND, BARE COPPER. THE TAILS SHALL EXTEND 8' (MIN.) ABOVE GRADE.

AVOIDANCE AREA

AVOIDANCE AREA

AVOIDANCE AREA

AVOIDANCE AREA

AVOIDANCE AREA

AVOIDANCE AREA

AVOIDANCE AREA

AVOIDANCE AREA

3' TYP

45' MAX

45' MAX

#2 AWG, 7 STRAND BARE COPPER GROUND FOR CHAIN LINK FENCE. FENCE TO BE GROUNDED EVERY 40' MINIMUM. (TYP)

250 MCM SOFT DRAWN BARE COPPER. TYPICAL FOR ALL PERIMETER AND MAIN GRID GROUND CONDUCTORS.

PROPERTY LINE

MASONRY WALL

#4/0 AWG, 19 STRAND BARE COPPER. TYPICAL FOR ALL EQUIPMENT GROUND CONDUCTORS.

#2 AWG, 7 STRAND BARE COPPER GROUND TO THE BARBED WIRE AT TOP OF FENCE. GROUND WIRE TO BE RUN ON THE INSIDE FACE OF THE WALL. (TYPICAL)

⚠ NOTES: CONTRACTOR TO LOCATE EXISTING GROUND GRID AND DIVERT THE RODS AND CONDUCTORS AS NECESSARY. EXACT LOCATION OF DIVERSION TO BE FIELD DETERMINED.

TRANSFORMER T4

TRANSFORMER T3

26'

148'

58'

TIE NEW FIBER OPTIC POLE TO BUILDING RE AWG TO BRANCH GRID

FIBER OPTIC POLE

115' TO WALL

TS1-A

TS1-B

TS2-A

TS2-B

TS2-C

EXISTING EP

FIDDYMENT ROAD

CREST

N0°27'50"W

13/1

12/2

TRANSMISSION

NO.	DATE	ISSUED FOR	BY
7	7/29/03	EXPANSION	KDA
6	11/9/01	AS BUILT	KDA
5	1/09/01	MINOR UPDATE	KVA
4	9/28/00	ADD FIBER OPTIC POLE	KA
3	7/31/00	ADD CB6024 BAY, 60/12KV TX & SWGR	KA
2	8/29/97	AS-BUILT	DP
1	7/3/96	BID	
13A	2/3/26	EWR278-SPARE TRANSFORMER ADDITION	DA
13	1/7/26	PHASE 2/KY4A UPDATE	DA
12	8/10/04	AS BUILT	KDA
11	4/13/04	RESIZE FOUNDATIONS	KDA
10	3/19/04	ISSUE FOR CONSTRUCTION	KDA
9	12/30/03	RDWY RE-ALIGNMENT	KDA
8	9/3/03	ADDED MISSING STRUCTURES	KDA

DESIGNED JDG
DRAWN DMM
CHECKED –
APPROVED WLS
CAD REF. T:/22004/58/58E5-17
SCALE 1" = 40'
WARNING 0 1/2 1 BAR SHOULD MEASURE 1" OR DRAWING IS NOT TO SCALE
LAST EDIT 9/9/97

CITY OF ROSEVILLE INCORPORATED APRIL 10, 1909

RMI RESOURCE MANAGEMENT INTERNATIONAL, INC.
3100 ZINFANDEL DR. SACRAMENTO, CA 95670
SACRAMENTO – PORTLAND – AUSTIN – PHOENIX – ORLANDO – COLUMBUS – ALBANY – WEST PALM BEACH

Roseville Electric
Reliable Energy • Dependable Service
(916) 774-5601

FIDDYMENT SUBSTATION

ENG.: M.FOK | APPR.: | SCALE: 1"=40' | JOB NO. 944013
DR.: J.HANSEN | DATE: 2/5/98
GROUNDING PLAN
ACCOUNT NO. 40001-6130
DRAWING NO. 325C1-26

EXISTING GRND GRID

500 MCM CU. GROUND TAIL, SEE GROUND GRID DWG. LEAVE 6' ABOVE PAD.

PULL BOX "A" 4' X 4' PULL BOX (RSVL. ELECTRIC SPEC. DWG. 5.1)

PULL BOX "B" 4' X 4' PULL BOX (RSVL. ELECTRIC SPEC. DWG. 5.1)

PL 500MCM CU GND TAIL SEE GND GRID DWG LEAVE 6' ABOVE PAD

10-4"C.S TO 60KV CONTROL CABLE TRENCH (SEE DWG. 325C1-01)

4-3"C.S TO WWPB1 (5' DEEP) (SEE DWG. 325C1-xxx)

FIBEROPTIC 1-4"C TO WWPP VIA PB405

8-4"C.S (3' DEEP)

4-3"C.S (5' DEEP)

3' R. TYP.

10-3"C.S

C8 X 8.2 (HOT-DIP GALVANIZED CHANNEL) 1 REQ'D 1" DIA. HOLE ON CHANNEL AT 18" O.C.

500 MCM CU. GROUND TAIL

2-3"C.S.

GALV. CHANNEL DELETED PER. KAM

ELEV. 124.50 (FOR PAD DETAILS SEE 326C1-02)

8-3"C.S

ELEV. 125.50 (FOR PAD DETAILS SEE 326C1-02)

C10 X 15.3 HOT-DIP GALVANIZED CHANNEL 3 REQUIRED

12KV SWITCHGEAR FOUNDATION

500 MCM CU. GROUND TAIL SEE GROUND GRID DWG. LEAVE 6' ABOVE PAD.

2"SQ.

2-1" C

SUMP

4-4"C.S, DUCT BANK CONCRETE ENCASED (TYP. 7)

3" CONCRETE ON ALL SIDES

A – A
N.T.S.

42" DIA. DRILLED SHAFT FOUNDATION (TYP. 2) SEE DWG 325C1-06 & 07 FOR DETAILS

16' TRENCH ℄

22' TRENCH ℄

34' TRENCH ℄

TRANSFORMER FOUNDATION

EXISTING BLOCK WALL

TO DF10-768

TO PB407

TO PB405

TO PB405

TO DF11B-768 (FIDDYMENT RD.)

TO DF9B-769

TO PB409

DUCT BANK GO UNDER EXIST. WALL FOUNDATION

EXISTING BLOCK WALL

EXISTING 16-4"C.S DUCT BANK

INSTALL 16-4"C.S DUCT BANK

CONTRACTOR TO LOCATE EXISTING STUB AND TIE CONDUITS TO EXISTING DUCT BANK SEE DRAWING 510-204, SHT. 4

INSTALL 12-4"C.S DUCT BANK (CONCRETE ENCASED)

EXISTING 12-4"C.S DUCT BANK

CONTRACTOR TO LOCATE EXISTING STUB AND TIE CONDUITS TO DUCT BANK SEE DRAWING 510-204, SHT. 4

FIDDYMENT ROAD

NOTES:

1. CONTRACTOR SHALL LOCATE EXISTING GROUND GRID AND RELOCATE THE GRID CONDUCTORS FOR THE INSTALLATION WORK. SEE GROUND GRID DRAWING NUMBER 325C1-26

FIDDYMENT 60/12KV SUBSTATION

REV	BY	DATE	DESCRIPTION	APPR.
2	KDA	7/19/01	AS-BUILTS	K.Hung
1	KWA	1/09/01	UPDATE	K.HUNG

Roseville Electric
Reliable Energy • Dependable Service
(916) 774-5601

ENG.: K.HUNG	APPR.:	SCALE: 1" = 3'	JOB NO. 000498
DR.: K.ANDREWS		DATE: 7/19/00	

TRANSFORMER AND SWITCHGEAR FOUNDATIONS

ACCOUNT NO. 40002-6130

DRAWING NO. 326C1-01

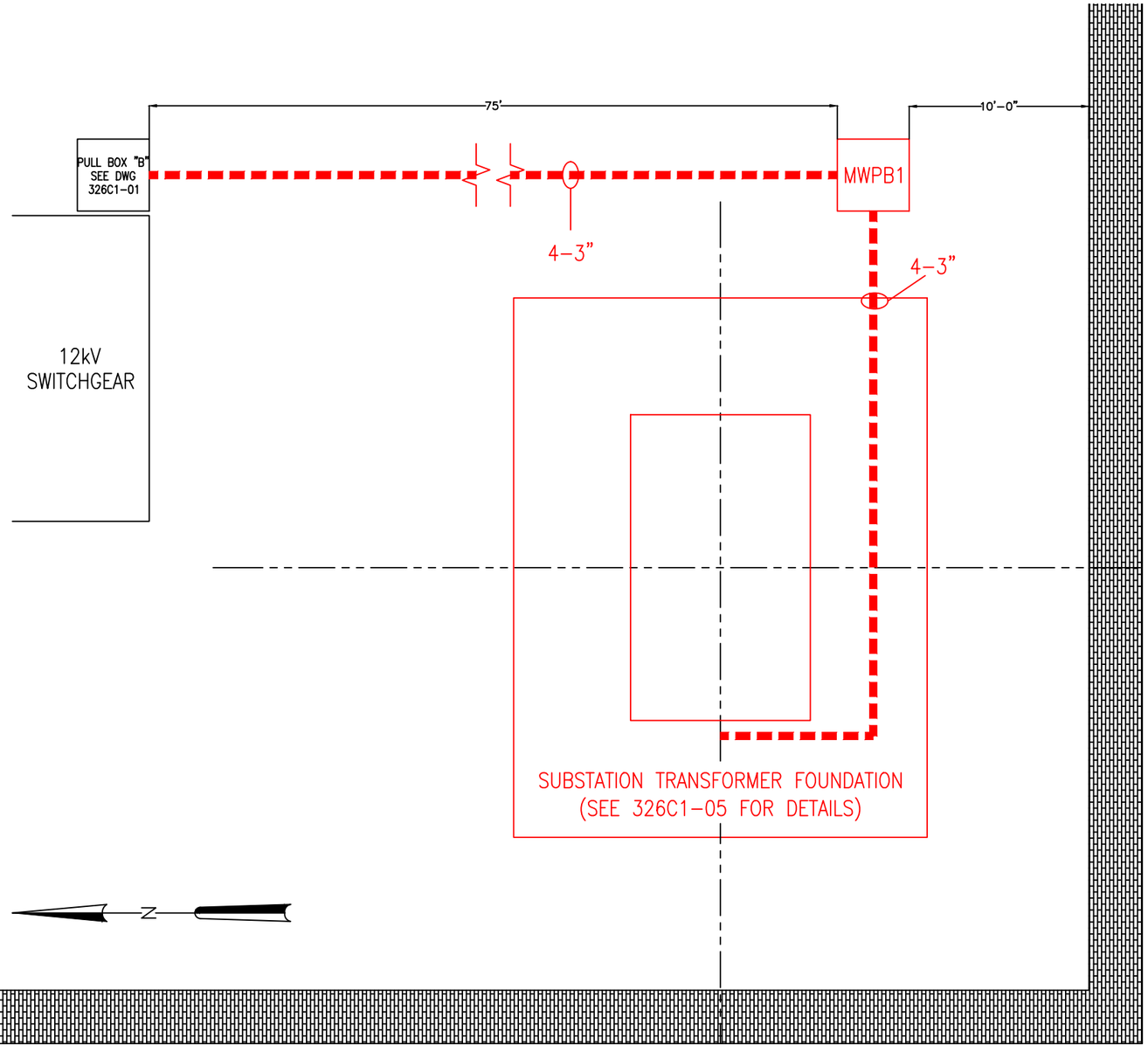

SOUTHWEST CORNER OF
FIDDYMENT SUBSTATION

TYPICAL DETAIL
FOR 2-2"C (NOT TO SCALE)

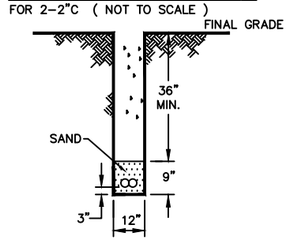

TYPICAL DETAIL
FOR 1-3"C (NOT TO SCALE)

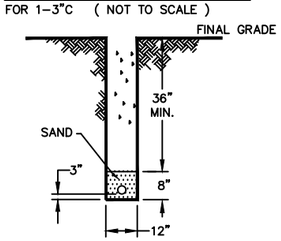

TYPICAL DETAIL
FOR 4-3"C (NOT TO SCALE)

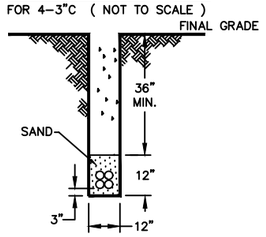

TYPICAL DETAIL
FOR 3-3"C (NOT TO SCALE)

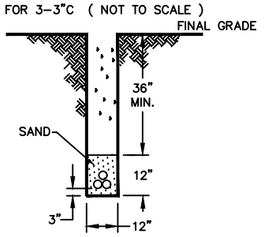

BILL OF MATERIALS (TYPICAL)

8030	CHANNEL
8031	COVER
8032	CHANNEL UNIVERSAL
8033	END PLATE
8000	LIFTING TOOL

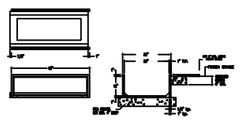

TYPICAL DETAILS OF CONCAST 8030
TRENCH SYSTEM

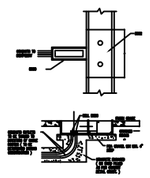

TYPICAL CONCAST TEE CONNECTION

FIDDYMENT SUBSTATION

REV	BY	DATE	DESCRIPTION	APPR.
0	DA	2/4/26	EWR278-SPARE SUBSTATION TRANSFORMER ADDITION	-

CITY OF ROSEVILLE CALIFORNIA
Roseville Electric

TITLE: SPARE XFRM FOUNDATION & CONDUIT PLAN

ENG. DA | APPR. | SCALE NTS
DR. DA | DATE 2/4/26

JOB NO. 500637
ACCOUNT NO.
DRAWING NO. 326C1-04

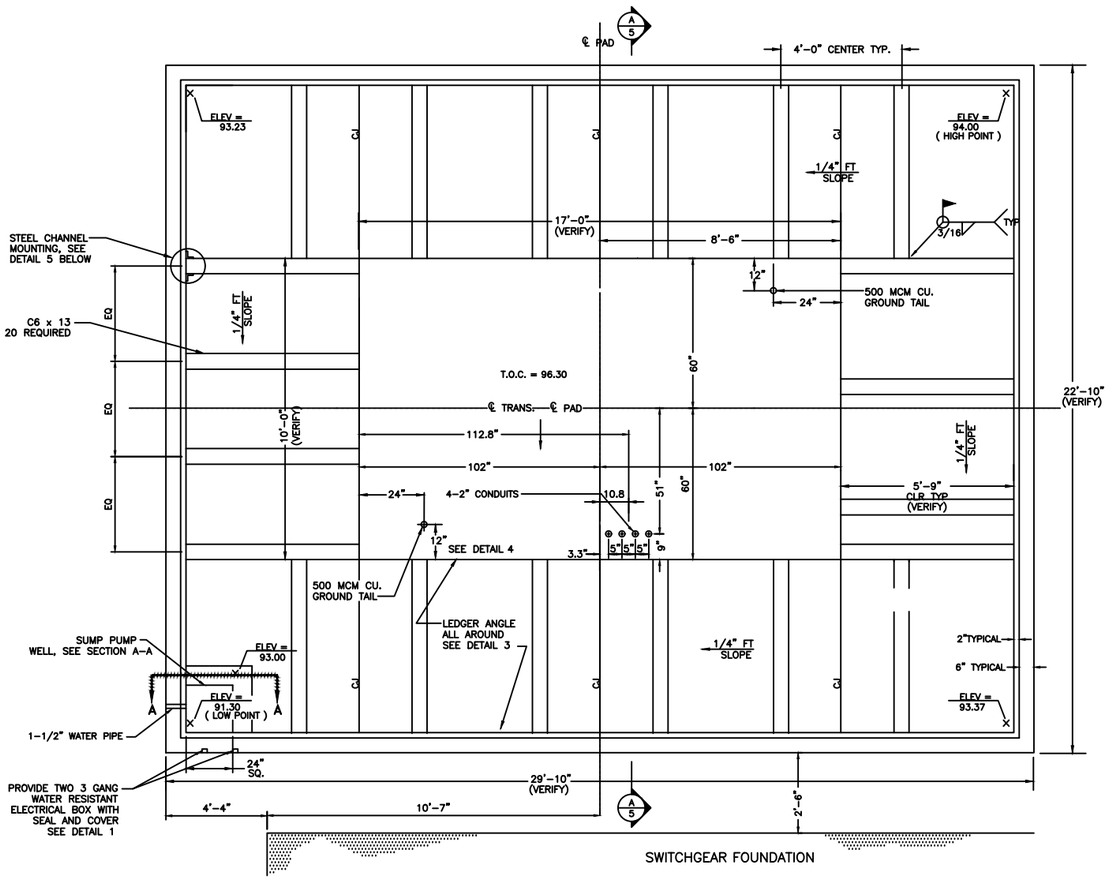

TRANSFORMER PAD – TYPICAL

NOT TO SCALE TWO TOTAL – SEE SITE PLAN

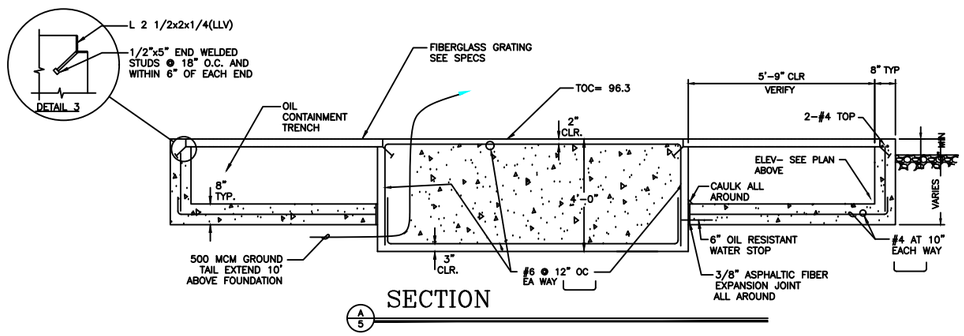

SUMP PUMP ELECTRICAL CONDUIT DETAIL

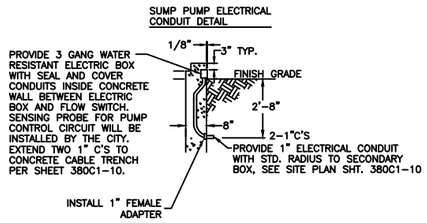

DETAIL 1

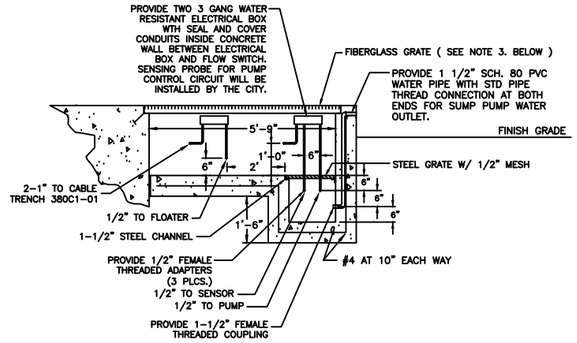

SECTION A-A

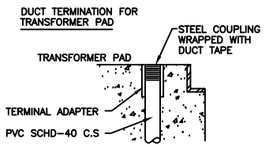

DETAIL 4

NOTES:

1. ALL STEEL SHALL BE HOT DIP GALVANIZED AFTER FABRICATION.
2. CONTRACTOR SHALL PROVIDE AND INSTALL FIBERGLASS GRATES OVER CONTAINMENT TRENCHES AS SHOWN ON THIS DRAWING. FIBER-GLASS GRATING SHALL BE MADE BY IKG IN ACCORDANCE WITH WEST PLAN SUBSTATION CIVIL CONSTRUCTION SPECIFICATIONS SECTION-FIBER GLASS GRATING.
3. CONTRACTOR SHALL CALL FOR INSPECTION BY CITY ENGINEER 24 HOURS PRIOR TO POURING ANY CONCRETE.

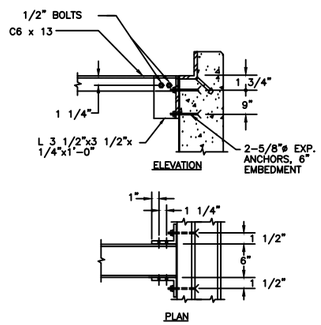

DETAIL 5

SAMPLE DRAWING – NOT FINAL DESIGN

FIDDYMENT SUBSTATION

REV	BY	DATE	DESCRIPTION	APPR.
0	DA	2/4/26	EWR278-SPARE SUBSTATION TRANSFORMER	–

ENG.:P.TRAN APPR.: SCALE: NONE JOB NO. 500637
DR.: K.ANDREWS DATE: 5/13/05 ACCOUNT NO. –

Roseville Electric
Reliable Energy • Dependable Service
(916) 774-5601

TRANSFORMER PAD & SUMP PUMP DETAILS

DRAWING NO. 326C1-05

KLEINFELDER

GEOTECHNICAL INVESTIGATION REPORT
PROPOSED 230-60 kV FIDDYMENT SUBSTATION
CITY OF ROSEVILLE
ROSEVILLE, CALIFORNIA

December 20, 1994

This document was prepared for use only by the client, only for the purposes stated, and within a reasonable time from issuance. Non-commercial, educational, and scientific use of this report by regulatory agencies is regarded as a "fair use" and not a violation of copyright. Regulatory agencies may make additional copies of this document for internal use. Copies may also be made available to the public as required by law. The reprint must acknowledge the copyright and indicate that permission to reprint has been received.

Copyright 1994 Kleinfelder, Inc.

APPENDIX A

FIELD INVESTIGATION AND LABORATORY TESTING

FIELD INVESTIGATION

General

The subsurface conditions at the site were explored on October 27 and 28, 1994, by drilling 14 borings to depths ranging from 20 to 21-1/2 feet below existing grade. Borings were drilled using Mobile B-61 and B-53 truck-mounted drill rigs equipped with a 4-inch-diameter solid-stem auger. The locations of borings performed for this investigation are shown on Plate 2 of the report. Designation "B-4" was omitted from the drilling program and is not shown on Plate 2.

IMPORTANT NOTE: Borings were located in the field by visual sighting and/or pacing from existing site features. Therefore, the location of borings shown on Plate 2 should be considered highly approximate and may vary from that indicated on the plate.

Our engineer maintained a log of the borings, visually classified soils encountered according to the Unified Soil Classification System (see Plate A-1), and obtained relatively undisturbed and bulk samples of the subsurface materials. A key to the Logs of Borings is presented on Plate A-2 of this appendix; Logs of Borings are presented on Plates A-3 through A-16.

Sampling Procedures

Soil samples were obtained from the borings using a Modified California Sampler driven 18 inches (unless otherwise noted) into undisturbed soil using a 30-inch drop of a 140-pound hammer. Blow counts were recorded at 6-inch intervals for each sample attempt and are reported on the logs in terms of blows-per-foot for the last foot of penetration. Soil samples obtained from the borings were packaged and sealed in the field to reduce moisture loss and disturbance, and returned to our Sacramento laboratory for further testing. After borings were completed, they were backfilled with the drill cuttings.

Copyright 1994 Kleinfelder, Inc.

LABORATORY TESTING

General

Laboratory tests were performed on selected samples to aid in soil classification and to evaluate physical properties of the soils which may affect the geotechnical aspects of project design and construction. A description of the laboratory testing program is presented below; a summary of all laboratory tests performed is presented on the Summary of Laboratory Tests, Plate A-17.

Moisture Content and Dry Unit Weight

Moisture content and dry unit weight tests were performed to evaluate moisture-conditioning requirements during site preparation and earthwork grading; soil overburden, and active and passive earth pressures; and relative soil strength and compressibility. Moisture content was evaluated in general accordance with ASTM Test Method D 2216; dry unit weight was evaluated using procedures similar to ASTM Test Method D 2937. Results of these tests are presented on the logs and are summarized on the Summary of Laboratory Tests.

Sieve Analysis

Sieve analyses were performed to evaluate the gradational characteristics of the material and to aid in soil classification. Tests were performed in general accordance with ASTM Test Method C 136. Results of these tests are presented on the logs and are summarized on the Summary of Laboratory Tests.

Atterberg Limits

Atterberg Limits tests were performed to aid in soil classification and to evaluate the plasticity characteristics of the material. Additionally, test results were correlated to published data to evaluate the shrink/swell potential of near-surface site soils. Tests were performed in general accordance with ASTM Test Method D 4318. Results of these tests are presented on the logs and are summarized on the Summary of Laboratory Tests.

Copyright 1994 Kleinfelder, Inc.

pH and Resistivity

pH and resistivity tests were performed on soil samples obtained near anticipated foundation and underground utility depths to evaluate soil corrosivity effects on buried concrete and steel. Test procedures were in general accordance with California Tests 643 and 532. Results of these tests are presented on the Summary of Laboratory Tests.

Direct Shear

Direct shear tests were performed on relatively undisturbed samples to evaluate the drained shear strength of the site soils. Samples were tested in a near-saturated condition in general accordance with ASTM Test Method D 3080 (consolidated, drained). Results of these tests are presented on Plates A-18 and A-19.

Expansion Index

An expansion index (EI) test was performed on a remolded, fine-grained soil sample considered representative of the anticipated floor slab subgrade. Test procedures were in general accordance with the Uniform Building Code (UBC) Standard 29-2. Results of this test are presented on the Summary of Laboratory Tests and may be compared to the table presented below to qualitatively evaluate the expansion potential of the near-surface site soils.

Expansion Index	Potential Expansion
0-20	Very low
21-50	Low
51-90	Medium
91-130	High
Above 130	Very high

Compaction

Three compaction tests were performed on near-surface bulk soil samples to evaluate maximum dry density and optimum moisture content. Test procedures were in general accordance with ASTM Test Method D 1557. Results of these tests are presented on the Summary of Laboratory Tests and Plate A-20.

Copyright 1994 Kleinfelder, Inc.

UNIFIED SOIL CLASSIFICATION SYSTEM

MAJOR DIVISIONS			USCS SYMBOL	TYPICAL DESCRIPTIONS
COARSE GRAINED SOILS (MORE THAN HALF OF MATERIAL IS LARGER THAN THE #200 SIEVE)	GRAVELS MORE THAN HALF COARSE FRACTION IS LARGER THAN THE #4 SIEVE	CLEAN GRAVELS WITH LITTLE OR NO FINES	GW	WELL-GRADED GRAVELS, GRAVEL-SAND MIXTURES WITH LITTLE OR NO FINES
			GP	POORLY-GRADED GRAVELS, GRAVEL-SAND MIXTURES WITH LITTLE OR NO FINES
		GRAVELS WITH OVER 12% FINES	GM	SILTY GRAVELS, GRAVEL-SILT-SAND MIXTURES
			GC	CLAYEY GRAVELS, GRAVEL-SAND-CLAY MIXTURES
	SANDS MORE THAN HALF COARSE FRACTION IS SMALLER THAN THE #4 SIEVE	CLEAN SANDS WITH LITTLE OR NO FINES	SW	WELL-GRADED SANDS, SAND-GRAVEL MIXTURES WITH LITTLE OR NO FINES
			SP	POORLY-GRADED SANDS, SAND-GRAVEL MIXTURES WITH LITTLE OR NO FINES
		SANDS WITH OVER 12% FINES	SM	SILTY SANDS, SAND-GRAVEL-SILT MIXTURES
			SC	CLAYEY SANDS, SAND-GRAVEL-SILT MIXTURES
FINE GRAINED SOILS (MORE THAN HALF OF MATERIAL IS SMALLER THAN THE #200 SIEVE)	SILTS AND CLAYS LIQUID LIMIT LESS THAN 50		ML	INORGANIC SILTS & VERY FINE SANDS, SILTY OR CLAYEY FINE SANDS, CLAYEY SILTS WITH SLIGHT PLASTICITY
			CL	INORGANIC CLAYS OF LOW TO MEDIUM PLASTICITY, GRAVELLY CLAYS, SANDY CLAYS, SILTY CLAYS, LEAN CLAYS
			OL	ORGANIC SILTS & ORGANIC SILTY CLAYS OF LOW PLASTICITY
	SILTS AND CLAYS LIQUID LIMIT GREATER THAN 50		MH	INORGANIC SILTS, MICACEOUS OR DIATOMACEOUS FINE SAND OR SILT
			CH	INORGANIC CLAYS OF HIGH PLASTICITY, FAT CLAYS
			OH	ORGANIC CLAYS & ORGANIC SILTS OF MEDIUM-TO-HIGH PLASTICITY
HIGHLY ORGANIC SOILS			PT	PEAT, HUMUS, SWAMP SOILS WITH HIGH ORGANIC CONTENTS

KLEINFELDER

PROJECT NO. 23-481415.A00

SOIL CLASSIFICATION SYSTEM
230-60kv FIDDYMENT SUBSTATION
CITY OF ROSEVILLE
ROSEVILLE, CALIFORNIA

PLATE

A-1

Copyright Kleinfelder, Inc. 1994

LOG SYMBOLS

	BULK / BAG SAMPLE	-4	PERCENT FINER THAN THE NO. 4 SIEVE (ASTM Test Method C 136)
	MODIFIED CALIFORNIA SAMPLER (2-1/2 inch outside diameter)	-200	PERCENT FINER THAN THE NO. 200 SIEVE (ASTM Test Method C 117)
	CALIFORNIA SAMPLER (3 inch outside diameter)	LL	LIQUID LIMIT (ASTM Test Method D 4318)
	STANDARD PENETRATION SPLIT SPOON SAMPLER (2 inch outside diameter)	PI	PLASTICITY INDEX (ASTM Test Method D 4318)
	SHELBY TUBE (3 inch outside diameter)	EI	EXPANSION INDEX (UBC Standard 29-2)
	CORE BARREL (1-3/4 inch inside diameter)	COL	COLLAPSE POTENTIAL
	WATER LEVEL (level after completion)	UC	UNCONFINED COMPRESSION
	WATER LEVEL (level where first encountered)	MC	MOISTURE CONTENT

GENERAL NOTES

1. Lines separating strata on the logs represent approximate boundaries only. Actual transitions may be gradual.
2. No warranty is provided as to the continuity of soil conditions between individual sample locations.
3. Logs represent general soil conditions observed at the point of exploration on the date indicated.
4. In general, Unified Soil Classification designations presented on the logs were evaluated by visual methods only. Therefore, actual designations (based on laboratory tests) may vary.

KLEINFELDER	LOG KEY 230-60kv FIDDYMENT SUBSTATION CITY OF ROSEVILLE ROSEVILLE, CALIFORNIA	PLATE A-2
PROJECT NO. 23-481415.A00		

Copyright Kleinfelder, Inc. 1994

Date Completed: 10/27/94

Logged By: S. Tracy

Total Depth: 21 feet

Surface Conditions: Vegetation consisting of low-to-high grasses.

Groundwater: No free groundwater encountered.

Depth, ft	FIELD: Sample Type	FIELD: Sample No.	FIELD: Blows/ft	FIELD: Pen, tsf	LABORATORY: Dry Density, pcf	LABORATORY: Moisture Content, %	LABORATORY: Other Tests	DESCRIPTION
								Approximate Surface Elevation (ft):
		1A						**Sandy SILT** (ML): Red-brown to gray, moist, very dense, strongly cemented, fine grained sand
		2A 2B	50/3"		90	20		
5								with interbed of fine silty sand
		3A 3B	50/6"					
10		4A 4B	50/3"					
15								SAND (SP): Gray and black, slightly moist, medium dense, fine to coarse grained
		5A 5B	63					
20			50/5"					no recovery
								Boring completed at a depth of approximately 21 feet below existing site grade.
25								

KLEINFELDER

PROJECT NO. 23-481415.A00

LOG OF BORING B- 1
230-60kv FIDDYMENT SUBSTATION
CITY OF ROSEVILLE
ROSEVILLE, CALIFORNIA

PLATE 1 of 1

A-3

Copyright Kleinfelder, Inc. 1994

Date Completed: 10/27/94

Logged By: S. Tracy

Total Depth: 20-1/2 feet

Surface Conditions: Vegetation consisting of low-to-high grasses.

Groundwater: No free groundwater encountered.

Depth, ft	FIELD: Sample Type	FIELD: Sample No.	FIELD: Blows/ft	FIELD: Pen, tsf	LABORATORY: Dry Density, pcf	LABORATORY: Moisture Content, %	LABORATORY: Other Tests	DESCRIPTION
								Approximate Surface Elevation (ft):
		1A 1B	32		109	7		**Silty SAND** (SM): Red-brown, moist, medium dense, fine grained
5		2A 2B	13				-200=21%	grades yellow-brown, fine to medium grained, with decreasing silt
								Silty SAND (SM): Brown, moist, very dense, fine to coarse grained
10		3A 3B	88/11"					
								Sandy SILT (ML): Yellow-brown, moist, very dense, fine to medium grained sand
15		4A 4B	75/8"					
								SAND (SP): Brown, moist, medium dense, fine to medium grained
20		5A 5B	59					**Sandy SILT** (ML): Gray, slightly moist, hard, fine grained sand
								Boring completed at a depth of approximately 20-1/2 feet below existing site grade.
25								

KLEINFELDER

PROJECT NO. 23-481415.A00

LOG OF BORING B- 2
230-60kv FIDDYMENT SUBSTATION
CITY OF ROSEVILLE
ROSEVILLE, CALIFORNIA

PLATE 1 of 1

A-4

Copyright Kleinfelder, Inc. 1994

Copyright Kleinfelder, Inc. 1994

KLEINFELDER

PROJECT NO. 23-481415.A00

SUMMARY OF LABORATORY TESTS
230-60kv FIDDYMENT SUBSTATION
CITY OF ROSEVILLE
ROSEVILLE, CALIFORNIA

PLATE 1 of 2

A-17

BORING NO.	SAMPLE NO.	SAMPLE DEPTH (ft)	DRY UNIT WEIGHT (pcf)	MOISTURE CONTENT (% of dry weight)	PARTICLE SIZE SIEVE SIZE - Percent Passing						ATTERBERG LIMITS		OTHER TESTS
					1"	3/4"	#4	#10	#40	#200	L.L.	P.I.	
B-1	2B	2½	90	20									
B-2	1B	1	109	7									
B-2	2B	5								21			
B-3	2B	2	87	6						54			
B-5	1A	½-3											Minimum resistivity=4,200 ohm-cm @ pH=6.3
B-5	1A	½-3											Compaction Curve See Plate A-20
B-5	2B	1	91	17									
B-6	3B	5½	74	27									Direct Shear See Plate A-18
B-6	4A	10½								19			
B-6	5B	15½	87	31									
B-7	2B	5½	101	18									
B-7	3A	10½	77	40									
B-8	2B	2									34	18	
B-9	1A	½-3											Compaction Curve See Plate A-20
B-9	2B	1	106	7						49			
B-9	3B	5	107	14									Direct Shear See Plate A-19
B-10	1A	1½-4½									27	13	Expansion Index = 78 @ 107.1 pcf & 11.0% MC
B-10	1A	1½-4½									27	13	Minimum resistivity=2,300 ohm-cm @ pH=6.5
B-10	1A	1½-4½									27	13	Compaction Curve See Plate A-20
B-10	2B	3	113	15									

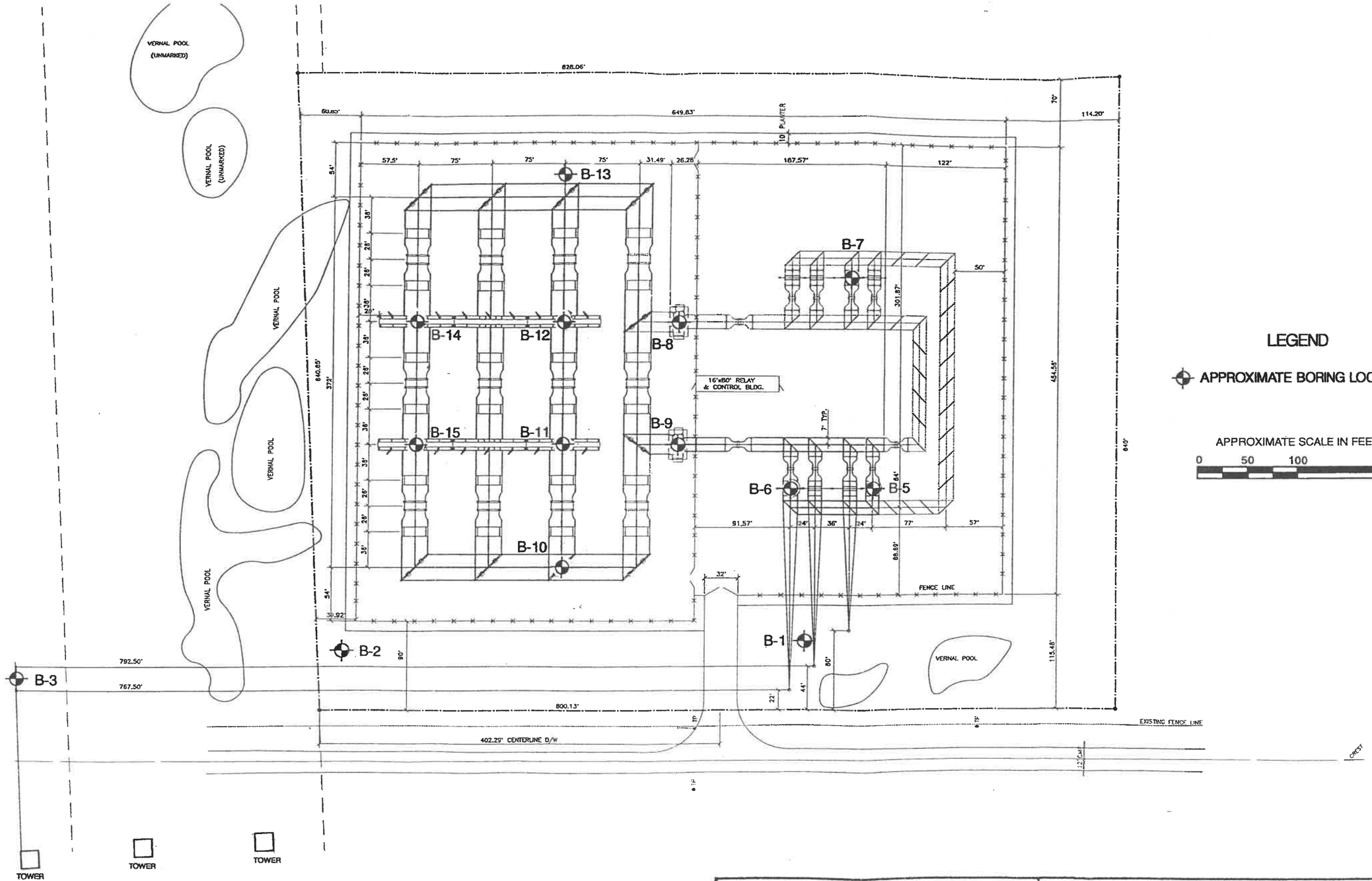

LEGEND

⊕ APPROXIMATE BORING LOCATION

APPROXIMATE SCALE IN FEET

0 50 100 200

NOTE: DESIGNATION "B-4" WAS NOT USED DURING THIS STUDY.

REFERENCE: "SUBSTATION PLAN";
by Resource Management International, Inc.; dated 10/6/94.

KLEINFELDER

PROJECT NO. 23-481415.A00

BORING LOCATION MAP
230-60kv FIDDYMENT SUBSTATION
CITY OF ROSEVILLE
ROSEVILLE, CALIFORNIA

PLATE 2

Copyright Kleinfelder, Inc. 1994

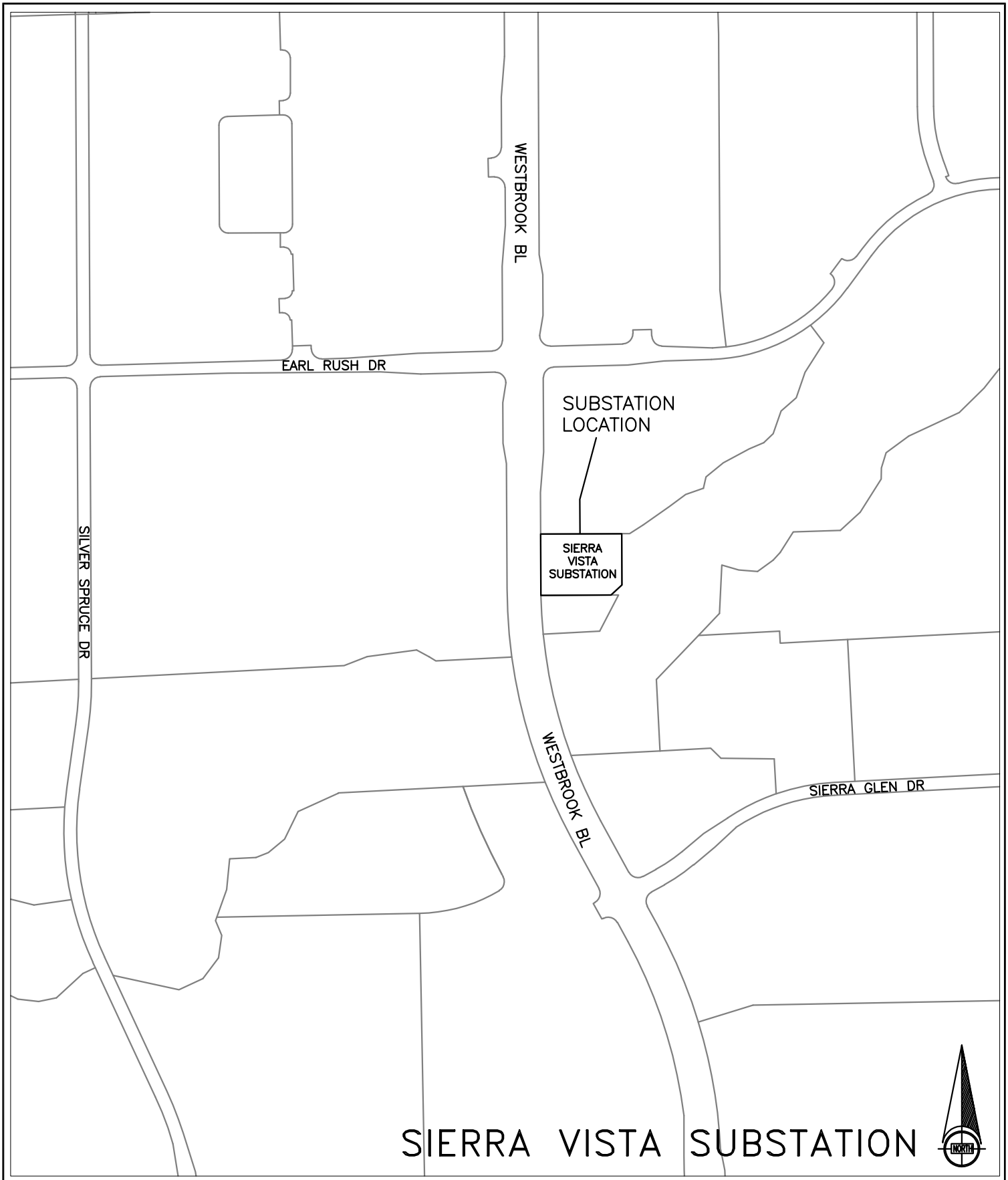

SIERRA VISTA SUBSTATION

CITY OF ROSEVILLE CALIFORNIA

Roseville Electric

ENG.: M. LARKIN	APPR.:	SCALE: NTS	JOB NO. 174105
DR.: C. SHIRLEY		DATE: 9/5/19	
SUBSTATION LOCATION PLAN			ACCOUNT NO. 41001–6130
			DRAWING NO. 395C1–00

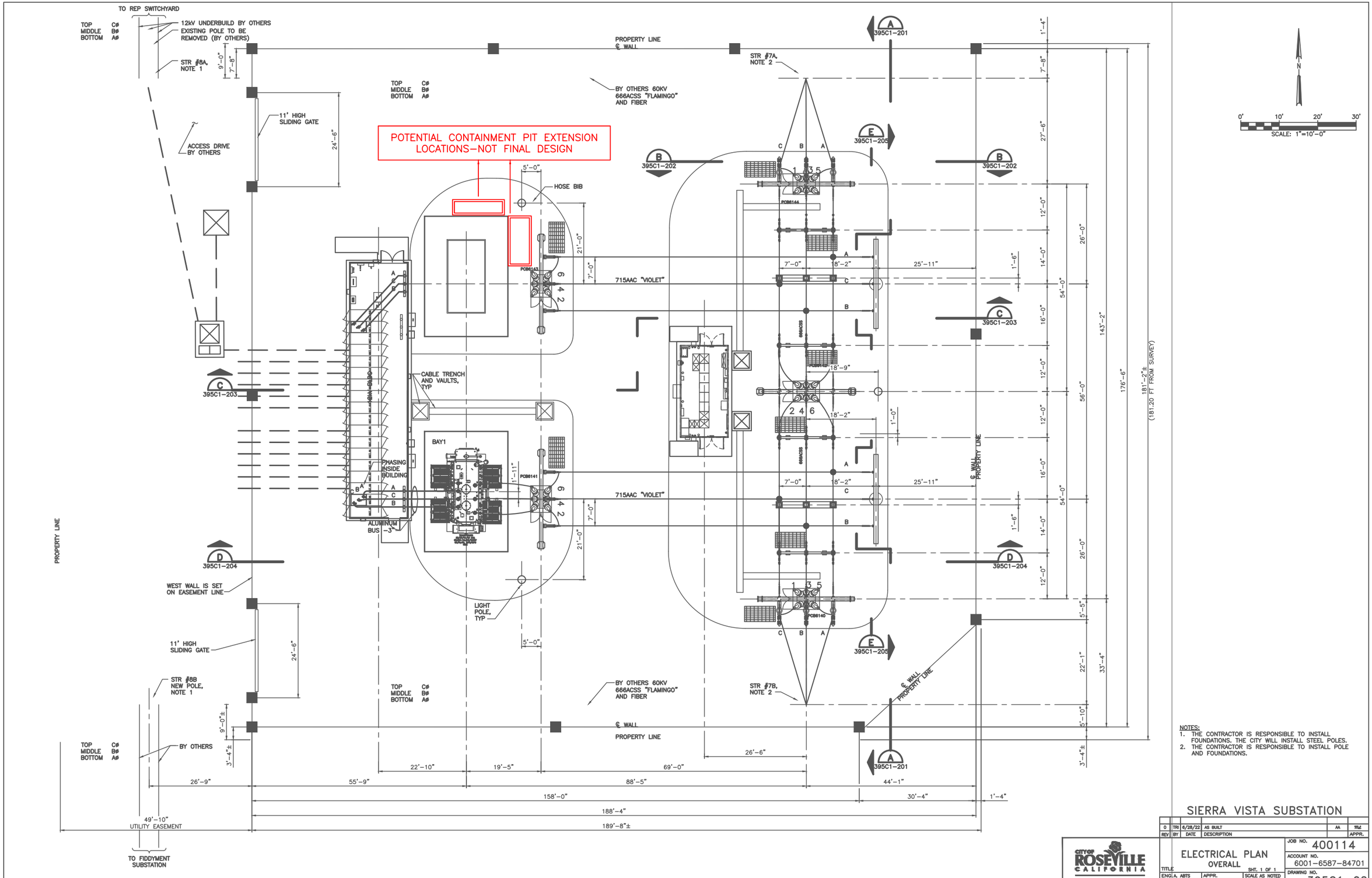

NOTES:
1. THE CONTRACTOR IS RESPONSIBLE TO INSTALL FOUNDATIONS. THE CITY WILL INSTALL STEEL POLES.
2. THE CONTRACTOR IS RESPONSIBLE TO INSTALL POLE AND FOUNDATIONS.

SIERRA VISTA SUBSTATION

REV	BY	DATE	DESCRIPTION		APPR.
0	TR	6/28/22	AS BUILT	AA	TRL

CITY OF ROSEVILLE CALIFORNIA
Roseville Electric

ELECTRICAL PLAN
OVERALL

TITLE
SHT. 1 OF 1
ENG. A. ABTS APPR.
DR. M. GUIDOTTI
SCALE AS NOTED
DATE 10/30/17

JOB NO. 400114
ACCOUNT NO. 6001-6587-84701
DRAWING NO. 395C1-02

PRECISE GRADING PLAN

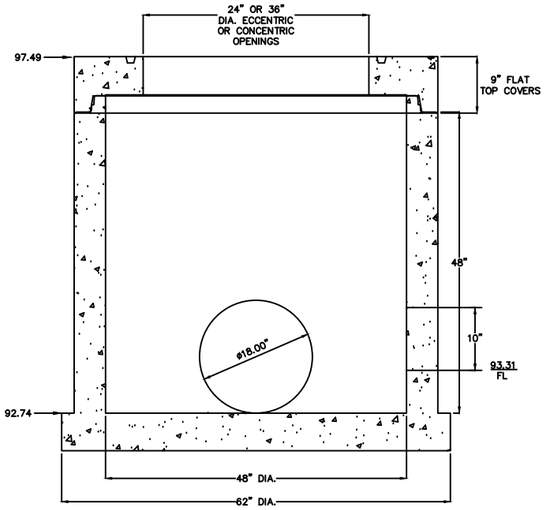

STORM DRAIN MANHOLE
N.T.S.

LEGEND

BLDG.	–	BUILDING
℄	–	CENTER LINE
EG	–	EXISTING GROUND
FS	–	FINISHED SURFACE
FG	–	FINISHED GRADE
INV	–	INVERT
P	–	PROPERTY LINE
SD	–	STORMDRAIN
TC	–	TOP OF CURB
TG	–	TOP OF GRADE
TYP.	–	TYPICAL
(XXX.XX)	–	EXISTING ELEVATION
XXX.XX	–	PROPOSED ELEVATION
GB	–	GRADE BREAK
HP	–	HIGH POINT
LP	–	LOW POINT
	–	PROPERTY LINE
	–	BIORETENTION PLANTER, REFER TO SHEET 395C2–201 FOR DETAILS

CONSTRUCTION NOTES:

1. CONSTRUCT 6" THICK ASPHALT PAVEMENT ON 6" CLASS 2 BASEROCK PER SOILS REPORT RECOMMENDATIONS
2. CONSTRUCT SCREEN WALL PER SEPARATE STRUCTURAL PLAN
3. INSTALL 6" OF CRUSHED ROCK OVER 2" THICK GUNITE
4. CONSTRUCT MODIFIED TYPE 2 VERTICAL CURB & GUTTER PER SECTION G–G, HEREON
5. CONSTRUCT 1" WEEP HOLE, 5' O.C. AS SHOWN IN PLAN VIEW.
6. CONSTRUCT 24" V–GUTTER, SEE SECTION E–E
7. TRENCH DRAIN PER LID PLAN, NDS CHANNEL DRAIN #830, END CAP #831, SIDE OUTLET #832, AND GRATE #836
8. 3" PVC SCHEDULE 40
9. VARIABLE HEIGHT RETAINING CURB

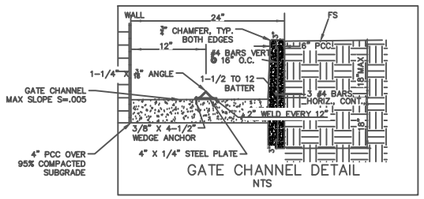

GATE CHANNEL DETAIL
NTS

NOTES:

CONTRACTOR TO FIELD VERIFY DIMENSIONS AND LOCATION OF THE V–TRACK

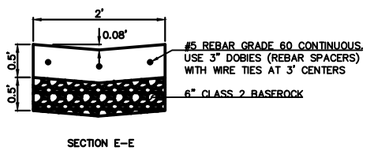

SECTION E–E

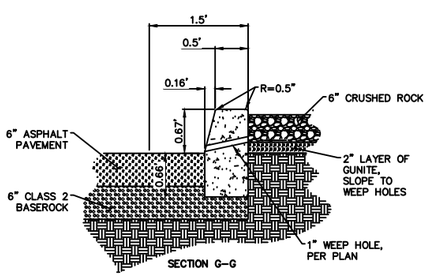

SECTION G–G

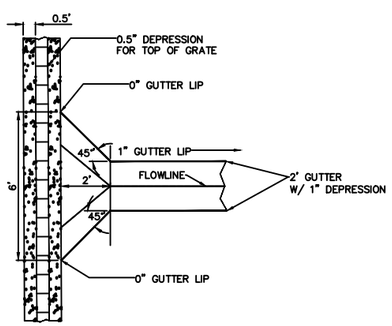

GUTTER TRANSITION AT TRENCH DRAIN
N.T.S.

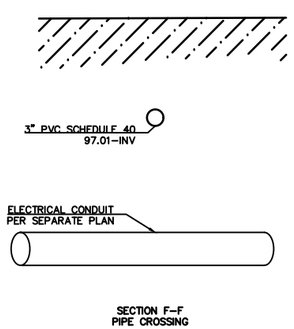

SECTION F–F
PIPE CROSSING

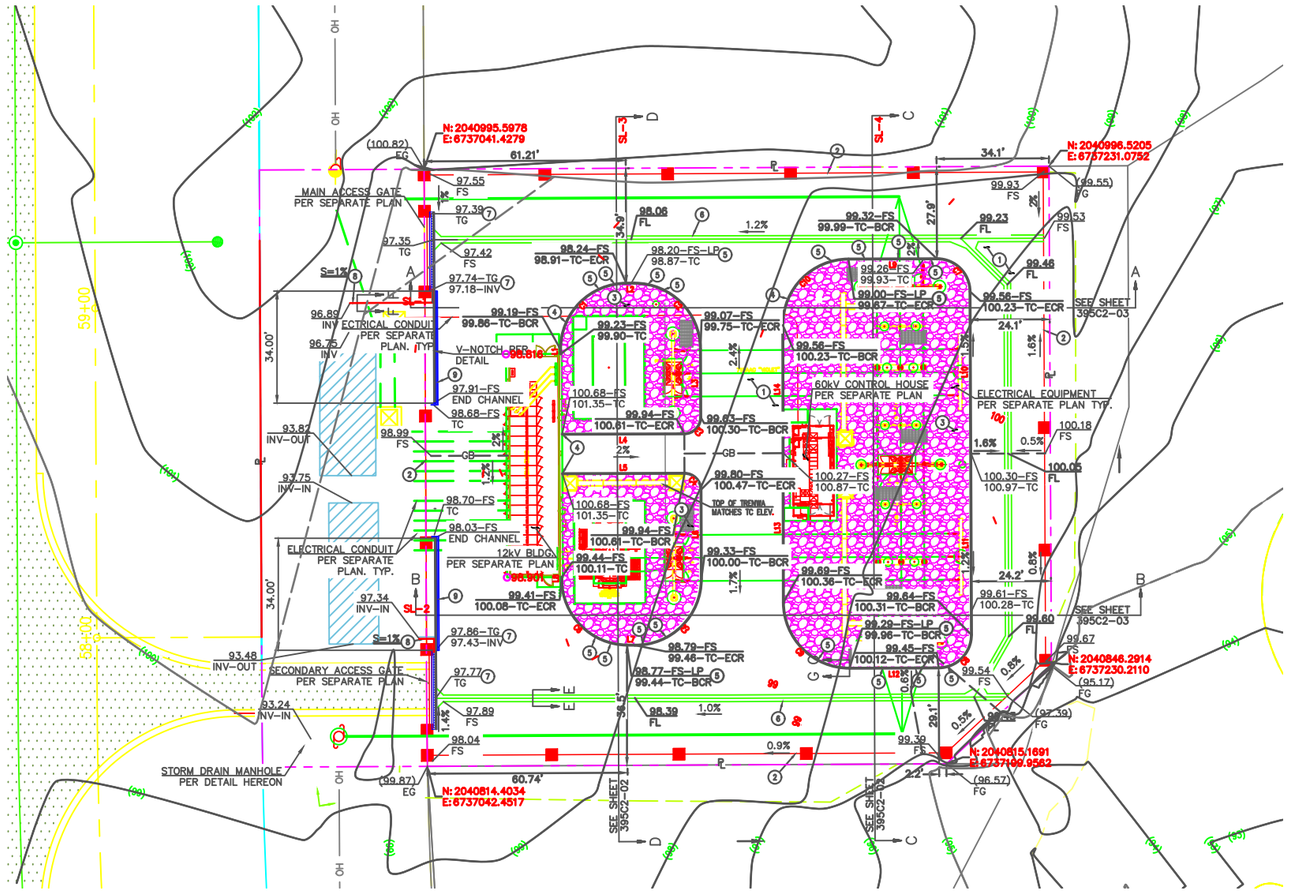

LINE TABLE		
LINE #	LENGTH	BEARING
L1	1.35	N00°16'44.00"W
L2	2.45	S89°50'13.64"W
L3	20.78	S00°14'14.07"E
L4	37.07	N89°49'21.52"E
L5	37.06	N89°50'13.64"E
L6	27.10	N00°14'14.07"W
L7	2.39	N89°27'26.60"W
L8	0.72	S00°16'44.00"E
L9	26.86	S89°49'17.42"W
L10	48.80	N00°13'58.56"W
L11	55.35	N00°14'46.62"W
L12	27.05	N89°48'09.28"E
L13	45.29	S00°07'17.93"E
L14	38.87	S00°07'18.43"E

CURVE TABLE				
CURVE #	LENGTH	RADIUS	DELTA	TANGENT
C1	31.46'	20.00'	090°06'58"	20.04'
C2	31.39'	20.00'	089°55'32"	19.97'
C3	7.86'	5.00'	090°03'36"	5.01'
C4	7.85'	5.00'	089°55'32"	4.99'
C5	31.69'	20.00'	090°46'47"	20.27'
C6	31.13'	20.00'	089°10'43"	19.72'
C7	15.70'	10.00'	089°56'44"	9.99'
C8	15.72'	10.00'	090°02'56"	10.01'
C9	31.44'	20.00'	090°04'33"	20.03'
C10	31.40'	20.00'	089°56'36"	19.98'

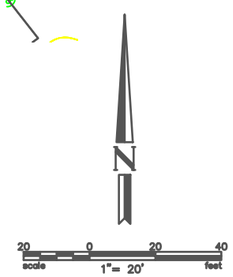

SIERRA VISTA SUBSTATION

REV	BY	DATE	DESCRIPTION		APPR.
0	TRI	6/28/22	AS BUILT	AA	TMc

CITY OF ROSEVILLE CALIFORNIA
Roseville Electric

PRECISE GRADING PLAN
TITLE SHT. 1 OF 3

ENG. A. ABTS	APPR.	SCALE 1"=20'–0"	
DR. M. GUIDOTTI		DATE 10/30/17	

JOB NO. 400114
ACCOUNT NO. 6001–6587–84701
DRAWING NO. 395C2–01

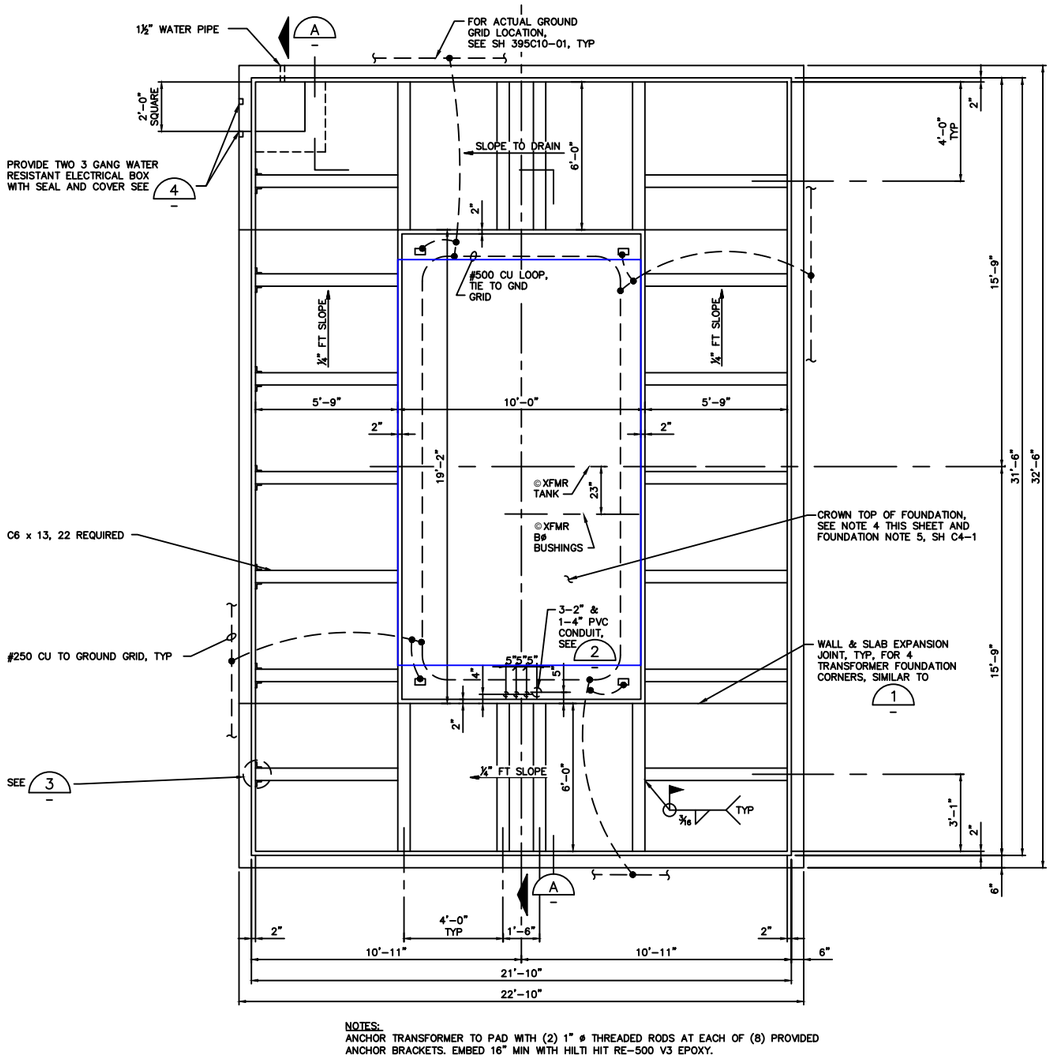

NOTES:
ANCHOR TRANSFORMER TO PAD WITH (2) 1" ø THREADED RODS AT EACH OF (8) PROVIDED ANCHOR BRACKETS. EMBED 16" MIN WITH HILTI HIT RE-500 V3 EPOXY.

TRANSFORMER OIL CONTAINMENT PLAN – TYPE T1

3/8"=1'-0"

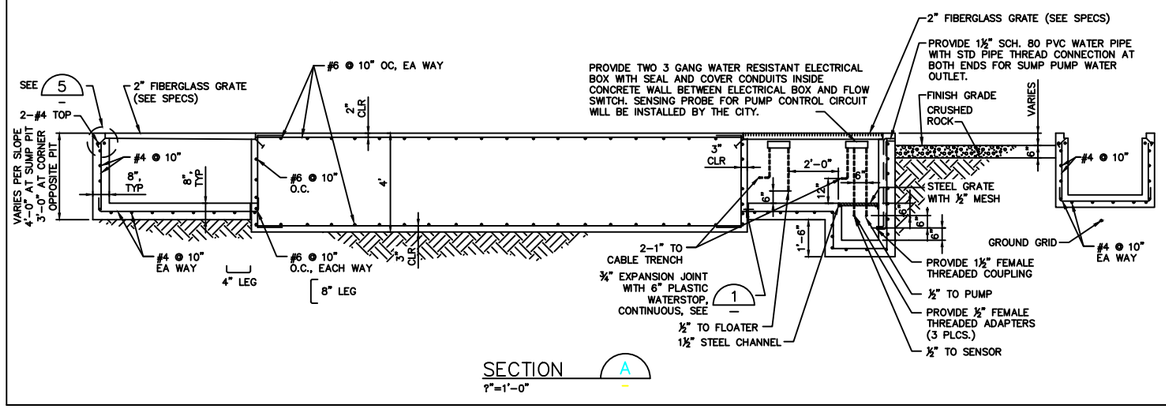

SECTION A

?"=1'-0"

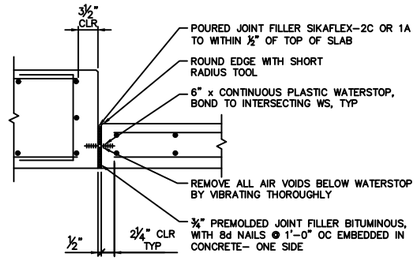

FOUNDATION/SLAB EXPANSION JOINT

DETAIL 1
3/4"=1'-0"

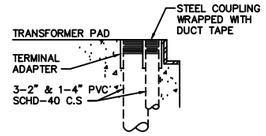

TRANSFORMER PAD DUCT TERMINATION

DETAIL 2
3/4"=1'-0"

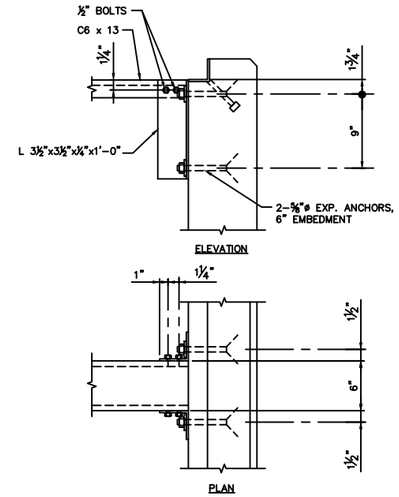

STEEL CHANNEL MOUNTING

DETAIL 3
1"=1'-0"

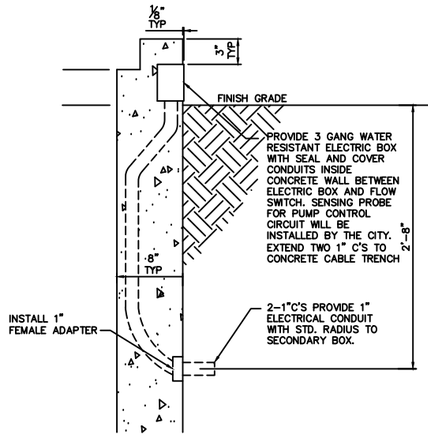

SUMP PUMP ELECTRICAL CONDUIT

DETAIL 4
1"=1'-0"

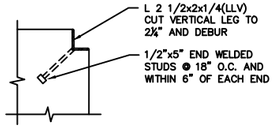

DETAIL 5
1"=1'-0"

NOTES:
1. STANCOR FIBERGLASS BASIN, 36" DIA X 60" DEEP. WITH ¼" AL SOLID, CHECKERED PLATE LID 40" FLANGE, 38 " BOLT CIRCLE. FOUR HUBS:
   (1) 2" AT 12:00 O'CLOCK 12" FROM TOP. (THREADED FOR CONNECTION FROM BOTH SIDES) ANTI-FLOATATION FLANGE AT BOTTOM OF BASIN.
   (1) 3" AT 3:00 O'CLOCK 18.2" FROM TOP.
   (1) 2" AT 5:30 O'CLOCK 36" FROM TOP.
   (1) 3" AT 6:00 O'CLOCK 18.2" FROM TOP.
2. REFER TO PLAN VIEW FOR ACTUAL ORIENTATION OF SUMP CONNECTIONS.
3. HUB SHALL BE CAPABLE OF THREADED CONNECTIONS FROM BOTH SIDES.
4. TRANSFORMER FOUNDATION TO HAVE SLIGHT (⅛"–1/4") CROWN TO ASSURE THERE IS NO SURFACE WATER POOLING.
5. TRANSFORMER OIL 7,100 GAL
   4" OF RAIN FALL 1,247 GAL
   TOTAL 8,347 GAL
   MOAT CAPACITY 9,767 GAL [120% TRANSFORMER OIL (8520 GAL) + 4" RAIN]
6. FOR LOCATION OF BASELINES, SEE PLOT PLAN, SH 395C1-02
7. COORDINATE CONDUIT AND GROUND GRID PLACEMENT WITH ELECTRICAL INSTALLATION CONTRACTOR
8. TRANSFORMER FOUNDATION SURFACE SHALL HAVE SLIGHT CROWN AND HAVE A SMOOTH FINISH. ALL OTHER FOUNDATIONS SHALL HAVE A LIGHT BROOM FINISH.

CONCRETE

1. CONCRETE WORK SHALL CONFORM TO ACI 318–11. IN ADDITION, HOT WEATHER CONCRETING SHALL CONFORM TO ACI 305 AND COLD WEATHER CONCRETING SHALL CONFORM TO ACI 306 REQUIREMENTS.
2. CONCRETE STRENGTH AND MIX REQUIREMENTS: ALL CONCRETE SHALL HAVE A MIN 28–DAY COMPRESSIVE STRENGTH OF 4,000 PSI, 0.45 MAX W/C RATIO. CONTRACTOR TO PROVIDE MIX DESIGNS FOR APPROVAL.
3. REINFORCING STEEL SHALL BE DEFORMED BILLET STEEL BARS CONFORMING TO ASTM A615, GRADE 60. STEEL SHALL BE KEPT CLEAN AND FREE OF RUST SCALES.
4. MINIMUM REINFORCING STEEL COVER REQUIREMENTS, UNLESS NOTED ON PLANS:
   A. CAST AGAINST AND EXPOSED TO EARTH: 3"
   B. FORMED AND EXPOSED TO WEATHER: 2"
5. REINFORCING BARS SHALL BE PLACED IN AS LONG LENGTHS AS POSSIBLE. ALL REINFORCING STEEL SHALL BE "COLD BENT." MINIMUM BARS LAP SHALL BE 48 BAR DIAMETERS UNLESS NOTED OTHERWISE.
6. REINFORCING AND INSERTS SHALL BE RIGIDLY HELD IN PLACE PRIOR TO PLACING CONCRETE.
7. NON–SHRINK GROUT SHALL BE SIKA GROUT 212 OAE.
11. PROVIDE 3/4" CHAMFER ON EXPOSED EDGES.
12. CONTRACTOR SHALL CALL FOR INSPECTION BY CITY ENGINEER 24 HOURS PRIOR TO POURING ANY CONCRETE.

GENERAL NOTES:

1. ALL STEEL SHALL BE HOT DIP GALVANIZED AFTER FABRICATION.
2. CONTRACTOR SHALL PROVIDE AND INSTALL FIBERGLASS GRATES OVER CONTAINMENT TRENCHES AS SHOWN ON THIS DRAWING. FIBER–GLASS GRATING SHALL BE MADE BY IKG IN ACCORDANCE WITH CONSTRUCTION SPECIFICATIONS SECTION–FIBER GLASS GRATING.
3. SEE FOUNDATION NOTES ON 395C4–03.

SIERRA VISTA SUBSTATION

REV	BY	DATE	DESCRIPTION		APPR.
2	ML	1/23/26	TRANSFORMER CONTAINMENT PIT MODIFICATION		WLC
1	ML	7/28/25	AS BUILT – CONFIRMATION	JG	WLC
0	TR	07/23/18	AS BUILT	AA	–

CITY OF ROSEVILLE CALIFORNIA
Roseville Electric

TITLE: SUBSTATION FOUNDATION DETAILS
SHT. 3 OF 5
ENG. M. LARKIN | APPR. | SCALE AS NOTED
DR. M. GUIDOTTI | DATE 12/18/17

JOB NO. 400114
ACCOUNT NO. 6001–6875–84701
DRAWING NO. 395C4–04

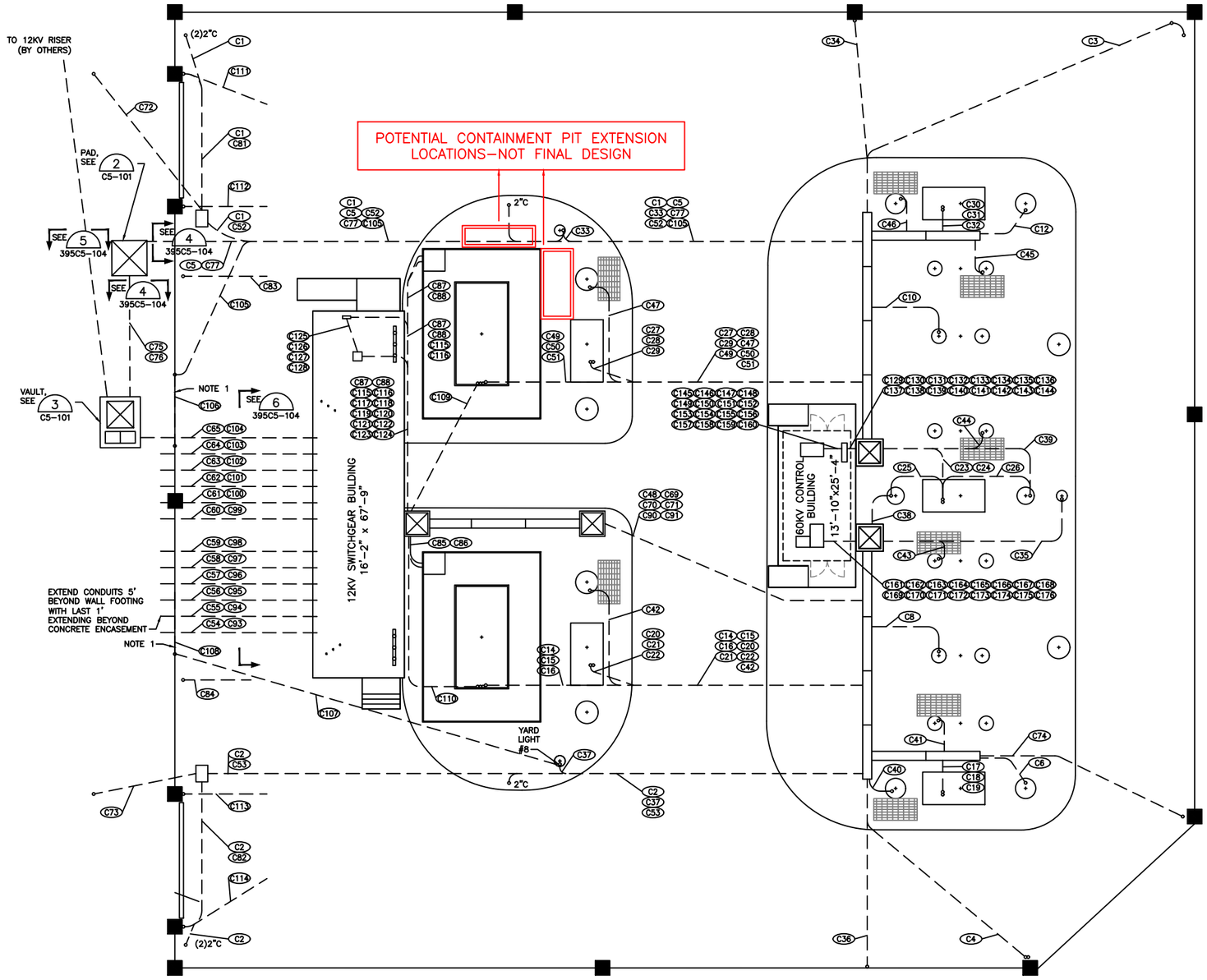

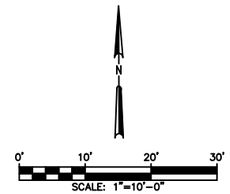

NOTES:

1. LOCATIONS OF CONDUIT ARE APPROXIMATE ONLY. THE CONTRACTOR MAY MAKE ANY NECESSARY ADJUSTMENTS TO SUIT FIELD CONDITIONS.
2. ALL BURIED CONDUIT SHALL BE PVC SCHEDULE 40 AND SHALL BE INSTALLED A MINIMUM OF 2'-0" BELOW TOP OF STONE COVER. ALL SWEEPS FROM 2'-0" BELOW GRADE TO SURFACE SHALL BE PVC SCHEDULE 80 CONDUIT. ALL ABOVE GRADE CONDUIT AND FITTINGS SHALL BE GALVANIZED STEEL RIGID CONDUIT. TRANSITION FROM PVC TO OTHER TYPES OF CONDUIT SHALL BE ACCOMPLISHED USING UL APPROVED ADAPTERS 6" ABOVE TOP OF FINISHED ROCK.
3. ALL SPARE CONDUIT SHALL BE BROUGHT UP TO 3" ABOVE TOP OF FINISHED ROCK AND TERMINATED WITH A PVC CAP, AND INCLUDE A NYLON PULLING STRING FOR FUTURE CABLE PULLING.
4. ANY CONDUITS ENTERING CABINETS, EQUIPMENT BOXES, ETC. FROM UNDERGROUND SHALL BE SEALED WITH DUCT SEAL COMPOUND AFTER THE CABLES HAVE BEEN INSTALLED.
5. THE BREAKERS AND TRANSFORMER HAVE AN OPENING IN THE BASE WITH A REMOVABLE COVER FOR CONDUIT ENTRANCE. COVER TO BE DRILLED BY CONTRACTOR.
6. PVC CONDUIT AND FITTINGS SHALL BE JOINED TOGETHER AND MADE LEAK PROOF USING FAST DRYING SOLVENT CEMENT.
7. A THREAD LUBRICANT AND SEALANT SHALL BE APPLIED TO ALL PVC AND GRS THREADED FITTINGS.
8. CONDUIT OPEN ENDS SHALL BE PLUGGED AFTER CONDUIT INSTALLATION. ALL CONDUIT SHALL BE THOROUGHLY CLEANED BEFORE CABLE PULLING BEGINS.
9. EXACT CONDUIT STUB-UP LOCATIONS SHALL BE DETERMINED BY THE GLAND PLATE ON THE EQUIPMENT, CONDUIT BOX, OR TERMINAL CABINET.
10. ALL CONDUIT STUB-UPS AT FOUNDATIONS SHALL BE STUBBED UP THROUGH THE FOUNDATION AND NOT TO THE SIDE OF THE FOUNDATION, NOR UP THE EXTERIOR OF THE FOUNDATION. CARE SHOULD BE TAKEN IN LOCATING PRECISE STUB-UP LOCATIONS THROUGH FOUNDATIONS SO THAT CONDUITS STUB-UP RIGHT BELOW THE EQUIPMENT LOCATION THEY NEED TO TRANSITION TO ABOVE GRADE.

SIERRA VISTA SUBSTATION

REV	BY	DATE	DESCRIPTION		APPR.
1	ML	7/29/25	AS BUILT - CONFIRMATION	JG	YHZ
0	TR	07/26/18	AS BUILT	AA	-

CITY OF ROSEVILLE CALIFORNIA
Roseville Electric

TITLE	SUBSTATION CONDUIT PLAN - OVERALL	SHT. 1 OF 1	JOB NO. 400114
ENG. K. MATTHEWS	APPR.	SCALE AS NOTED	ACCOUNT NO. 6001-6875-84701
DR. L. BERNLOEHR		DATE 12/15/17	DRAWING NO. 395C5-01

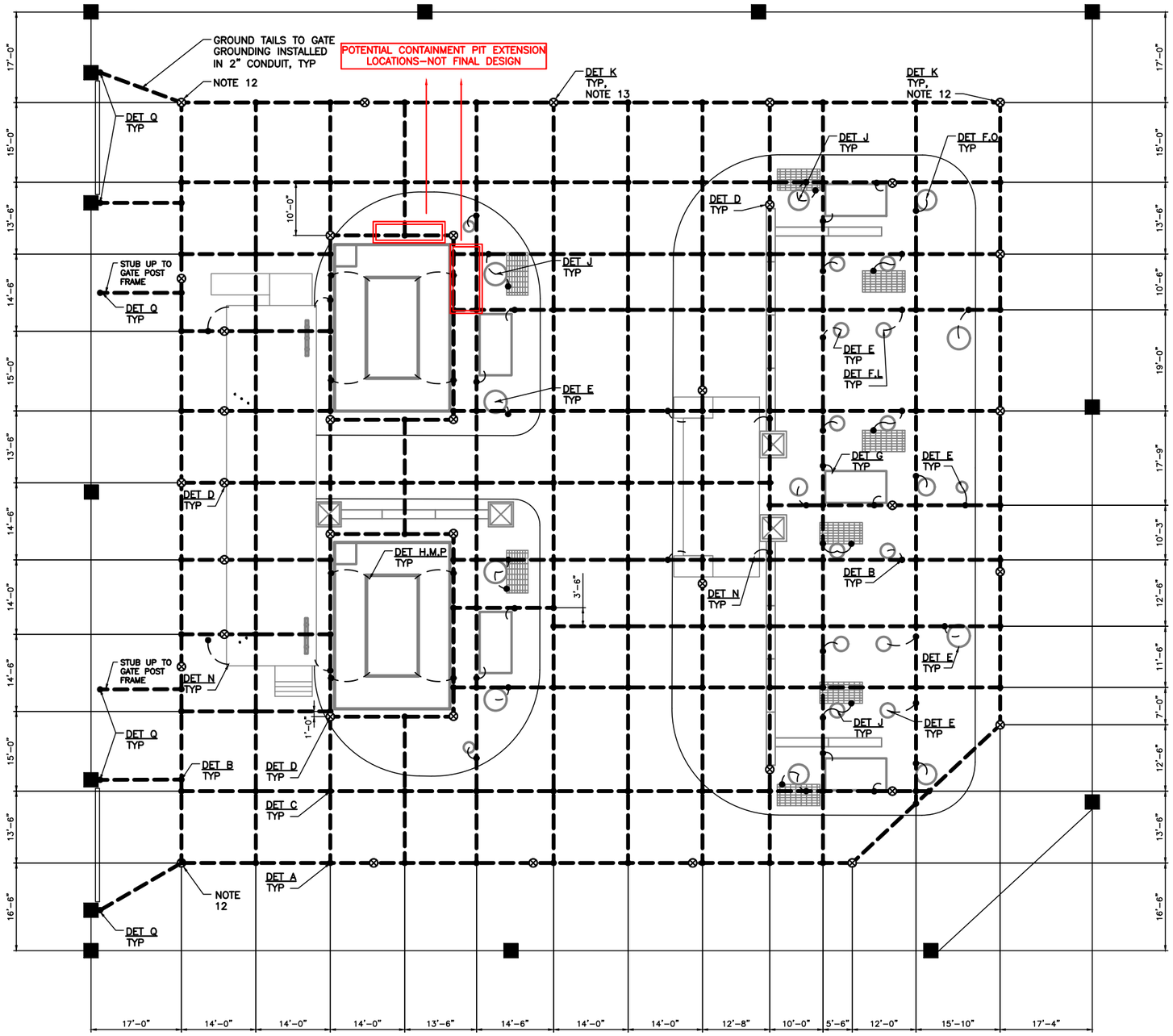

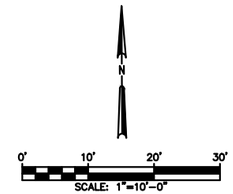

LEGEND

- EQUIPMENT OPERATOR PLATFORM 8'x4'x1"
- BARE COPPER GROUND WIRE
- GROUND CONNECTION
- COPPERWELD GROUND ROD

NOTES:

1. MAIN GROUND GRID CABLES SHALL BE 250 MCM BARE COPPER. PIGTAILS SHALL BE 500 MCM BARE COPPER. MAIN GROUND GRID CABLES SHALL BE BURIED TO A DEPTH OF 30" BELOW SUBGRADE EXCEPT AS NOTED.
2. GROUND CABLE TO BE TRAINED NEATLY OVER FOUNDATIONS.
3. CONTRACTOR TO COIL GROUND LEADS OF SUFFICIENT LENGTH ON FOUNDATIONS, AS NECESSARY PER THE GROUNDING PLAN, TO GROUND EQUIPMENT AS IDENTIFIED IN THE GROUNDING DETAILS. SPLICING PIGTAILS SHALL NOT BE PERMITTED.
4. FOR EQUIPMENT CONNECTIONS, PROVIDE PIGTAILS OF ADEQUATE LENGTH TO EXTEND TO FINAL ELEVATION OF EQUIPMENT WITHOUT SPLICING TO MAKE UP APPLICABLE DETAILS.
5. PIGTAILS AND EXPOSED GROUNDING CONDUCTOR SHALL BE PROTECTED FROM PHYSICAL DAMAGE DURING CONSTRUCTION.
6. DO NOT DRIVE GROUND RODS CLOSER THAN 18" FROM ANY FOOTING.
7. SOIL RESISTIVITY MEASURED BY FUGRO USING THE WENNER 4-PIN METHOD.
8. PROVIDE 500 MCM PIGTAIL AT FOUR CORNERS OF CONTROL HOUSE AND SWITCHGEAR BUILDING. FIELD DETERMINE TYPE AND LOCATION OF CONNECTION REQUIRED.
9. GROUNDING DIMENSIONS ARE APPROXIMATE.
10. 3000 OHM-M ROCK COVERING SHALL BE 6" DEEP, 10,000 OHM-M ASPHALT COVERING SHALL BE 6" DEEP, BOTH SURFACES SHALL BE INSTALLED AS INDICATED IN DRAWING 395C2-01. ENSURE 6" OF ASPHALT SURFACE COVERING SHALL EXTEND OUTSIDE OF YARD IN GATE AREAS WITHIN TOUCHING DISTANCE OF METALLIC SUBSTATION GATE (1 METER) BEFORE TAPERING OFF.
11. SUBSTATION METALLIC SLIDING GATES SHALL BE MOUNTED TO SLIDE OPEN ON THE INSIDE OF THE WALLS.
12. THE GROUND RODS ON THE SW, NW, AND NE CORNER OF THE GRID SHALL BE 30' IN LENGTH AND INSTALLED AT A 45 DEGREE ANGLE DIAGONALLY AWAY FROM THE GRID AND DOWNWARDS.
13. THE REMAINDER OF GROUND RODS ON THE OUTERMOST EDGE OF THE GRID SHALL BE 30' IN LENGTH (NOT INSTALLED AT AN ANGLE). ALL OTHER GROUND RODS (INTERNAL TO THE GRID) SHALL BE 10' IN LENGTH.

DESIGN CRITERIA

1. SOIL MODEL

LAYER	UPPER BOUNDARY	LOWER BOUNDARY	RESISTIVITY
1	0'-0"	1.6'	30.1 ΩM
2	1.6'	5.1'	13.6 ΩM
3	5.1'	∞	26.6 ΩM

2. CALCULATED GRID IMPEDANCE:
   2.1. ~0.21 OHMS (NO EXTERNAL GROUND CONNECTION)
3. DESIGN FAULT CURRENT: 20,000 A.
4. DESIGN CLEARING TIME: 0.95 SECONDS
5. STUDY ASSUMES NO SPLIT FACTORS, 100% OF FAULT CURRENT STATED ABOVE IS EARTH CURRENT FLOWING THROUGH GRID BACK TO REMOTE SOURCE.

SIERRA VISTA SUBSTATION

REV	BY	DATE	DESCRIPTION	JC	TITLE
1	ML	7/31/25	AS BUILT – CONFIRMATION	JC	
0	TR	07/23/18	AS BUILT	AA	–

CITY OF ROSEVILLE CALIFORNIA
Roseville Electric

SUBSTATION GROUNDING PLAN
OVERALL
TITLE SHT. 1 OF 1

ENG. A. ABTS | APPR. | SCALE AS NOTED
DR. M. GUIDOTTI | DATE 12/15/17

JOB NO. 400114
ACCOUNT NO. 6001-6875-84701
DRAWING NO. 395C7-01

CITY OF ROSEVILLE, 230-60KV FIDDYMENT SUBSTATION PROJECT
PHASE 2 EXPANSION

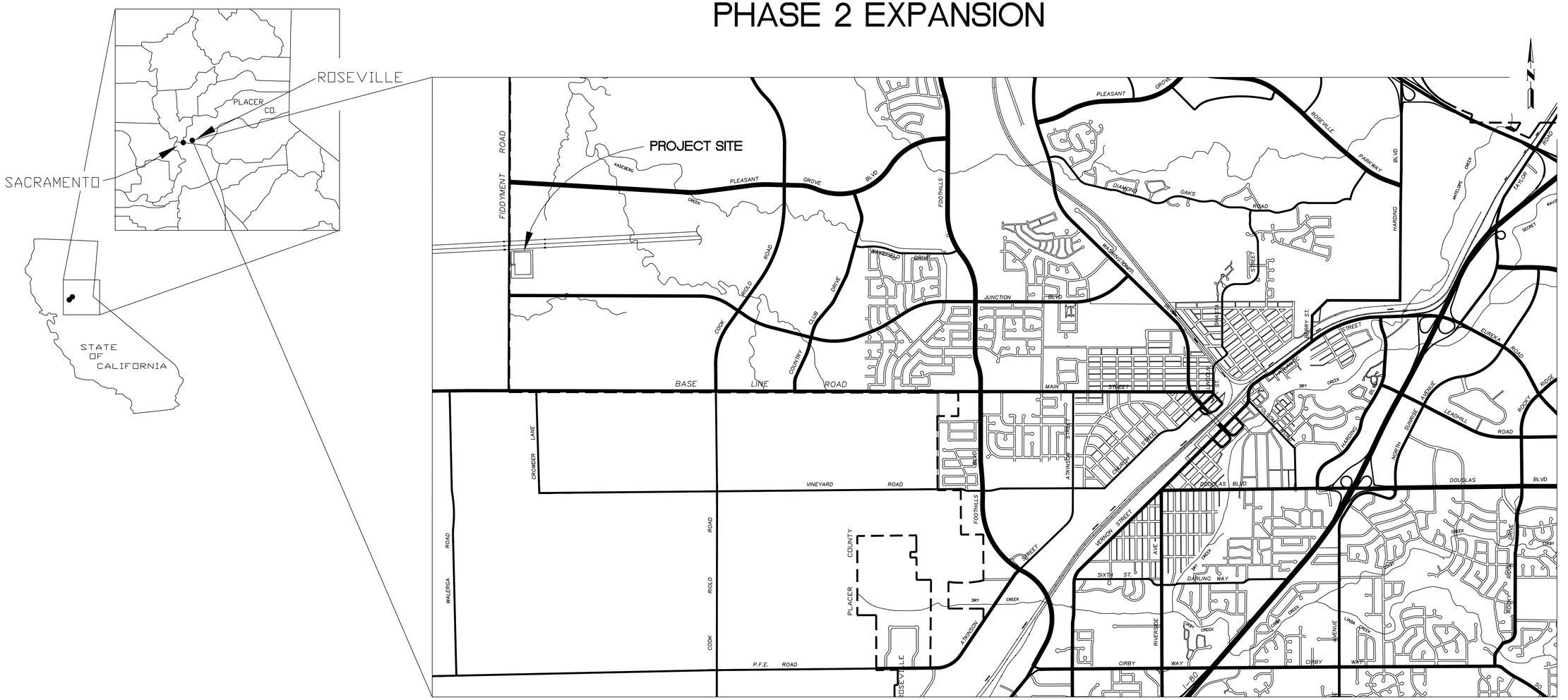

FIDDYMENT SUBSTATION

REV	BY	DATE	DESCRIPTION	TECH	APPR.
1	KB	1/16/04	PHASE 2 EXPANSION	MF	

ELECTRIC DEPARTMENT
(916) 774-5601

TITLE: VICINITY & SITE LOCATION PLAN & DRAWING LIST

ENG. M. FOK	APPR.	SCALE 1"=1500'
DR. J. HANSON		DATE 2/5/98

JOB NO. 944013
ACCOUNT NO. 40001
DRAWING NO. 325C1-01

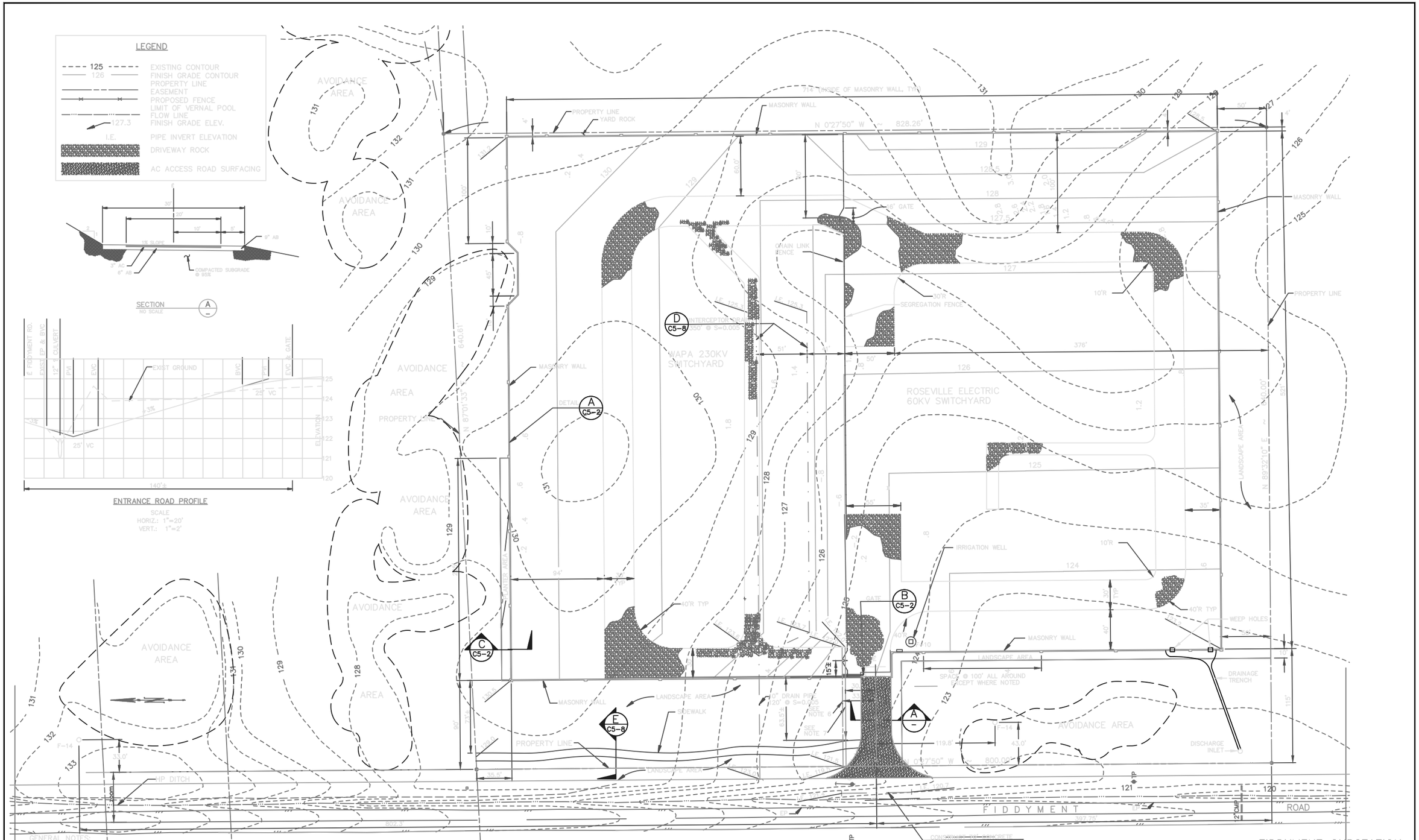
LEGEND
125 EXISTING CONTOUR
126 FINISH GRADE CONTOUR
PROPERTY LINE
EASEMENT
PROPOSED FENCE
LIMIT OF VERNAL POOL
FLOW LINE
127.3 FINISH GRADE ELEV.
I.E. PIPE INVERT ELEVATION
DRIVEWAY ROCK
AC ACCESS ROAD SURFACING
SECTION A
NO SCALE
ENTRANCE ROAD PROFILE
SCALE
HORIZ.: 1"=20'
VERT.: 1"=2'
AVOIDANCE AREA
WAPA 230KV SWITCHYARD
ROSEVILLE ELECTRIC 60KV SWITCHYARD
FIDDYMENT ROAD
MASONRY WALL
PROPERTY LINE
YARD ROCK
CHAIN LINK FENCE
SEGREGATION FENCE
IRRIGATION WELL
LANDSCAPE AREA
SIDEWALK
HP DITCH
DISCHARGE INLET
DRAINAGE TRENCH
WEEP HOLES
SPACE @ 100' ALL AROUND EXCEPT WHERE NOTED
CONSTRUCT 30' CONCRETE ENCASED 12" CMP CULVERT
N 0°27'50" W ~ 828.26'
N 0°27'50" W ~ 800.00'
N 89°32'10" E ~ 640.00'
N 87°01'33" W ~ 640.61'
714' (INSIDE OF MASONRY WALL, TYP.)
GENERAL NOTES:
1. PROVIDE 6" LAYER CRUSHED YARD ROCK SURFACING WITHIN THE MASONRY WALL LIMITS AND 4 FOOT WIDE STRIP ALONG THE OUTSIDE OF THE EAST WALL.
2. PROVIDE 6" LAYER DRIVEWAY ROCK SURFACING ON ACCESS DRIVEWAYS WHERE SHOWN.
3. ALL DRIVEWAY SURFACING SHALL BE COMPACTED.
4. CRUSHED ROCK YARD SURFACING SHALL NOT BE COMPACTED.
5. MEASUREMENTS TO MASONRY WALL ARE TO INSIDE OF WALL.
6. PLACE 120' x 1" POLYETHYLENE PIPE (AWWA C901) WATER SVC. W/ 36" MIN. COVER. CAP ENDS.
7. PLACE 120' x 4" VCP EXTRA STRENGTH SEWER SERVICE @ S=0.02. SEAL ENDS W/ REMOVABLE STOPPERS.
4 9-15-10 EWR 39 AS BUILT AFP
3 8-31-10 EWR 39 AFP
2 12/18/03 ADJUSTED ROAD ALIGNMENT
1 7/3/96 BID
NO. DATE ISSUED FOR BY
DESIGNED GP
DRAWN GT/PB
CHECKED GP
APPROVED
SCALE 1" = 40'
WARNING
BAR SHOULD MEASURE 1" OR DRAWING IS NOT TO SCALE
CAD REF. R:/22004/2246/46C5-01
LAST EDIT 7/19/96
CITY OF ROSEVILLE INCORPORATED APRIL 10, 1909
RMI
RESOURCE MANAGEMENT INTERNATIONAL, INC.
3100 ZINFANDEL DR. SACRAMENTO, CA 95670
SACRAMENTO - PORTLAND - AUSTIN - PHOENIX - ORLANDO - COLUMBUS - ALBANY - WEST PALM BEACH
CITY OF ROSEVILLE CALIFORNIA
Roseville Electric
FIDDYMENT SUBSTATION
REV BY DATE DESCRIPTION APPR.
SITE AND GRADING PLAN
TITLE
ENG. M. FOK APPR.
DR. J. HANSON
SCALE 1"=40'
DATE 2/5/98
JOB NO. 944013
ACCOUNT NO. 40001
DRAWING NO. 325C1-03

LEGEND:

— — BURIED GROUND CABLE

EQUIPMENT & FENCE GROUND CABLE

GROUND ROD, COPPER, 3/4" ø X 10'-0"

ELECTRICAL CONNECTION

NOTES:

1. SEE SHEET E5-18 FOR GROUNDING DETAILS.
2. MAIN GRID GROUNDING SHALL BE INSTALLED AT A MAXIMUM SPACING OF 45'-0".
3. FENCE GROUNDING SHALL BE INSTALLED AT A MAXIMUM SPACING OF 20'-0".
4. INSTALL 250MCM SOFT DRAWN BARE COPPER GROUND WIRE INSIDE OF THE FULL LENGTH OF EACH TRENCH. GROUND WIRE WILL BE CONNECTED TO THE TRENCH WALL EVERY 20'-0" MINIMUM.
5. THE GROUND CABLE IN THE CABLE TRENCHES SHALL BE CONNECTED TO THE MAIN GRID WITH #4/0 AWG, 19 STRAND BARE COPPER EACH TIME THE TRENCH CROSSES THE GRID
6. INSTALL 250MCM SOFT DRAWN BARE COPPER GROUND WIRE COMPLETELY AROUND THE INSIDE PERIMETER OF ALL MANHOLES. GROUND WIRE TO BE 18" ABOVE THE BOTTOM OF THE MANHOLE AND SHOULD BE CONNECTED TO THE MANHOLE WALL EVERY 2'-0" MINIMUM. GROUND WIRE TO BE CONNECTED TO THE MAIN GRID AT TWO LOCATIONS ON OPPOSITE CORNERS OF THE MANHOLE.
7. ALL GROUND CONDUCTORS TO BE BURIED 18" BELOW GROUND GRADE, NOT INCLUDING 6" OF YARD ROCK EXCEPT WHERE THEY PASS UNDER TRENCHES, DUCT BANKS, ETC. GROUND CONDUCTORS SHOULD PASS UNDER THESE ITEMS BY 6" MINIMUM.

⚠ 8. ALL GROUND TAILS CONNECT FROM EXISTING GROUND GRID TO 60/12KV TX AND 60/12KV SWITCH-GEAR SHALL BE 500MCM CU., ONLY CADWELL CONNECTORS TO BE USED FOR GROUND GRID CONNECTIONS.

⚠ 9 FOR PHASE 2 CONSTRUCTION ALL GROUND TAILS SHALL BE 4/0 AWG, 19 STRAND, BARE COPPER. THE TAILS SHALL EXTEND 8' (MIN.) ABOVE GRADE.

AVOIDANCE AREA

AVOIDANCE AREA

AVOIDANCE AREA

AVOIDANCE AREA

AVOIDANCE AREA

AVOIDANCE AREA

AVOIDANCE AREA

AVOIDANCE AREA

3' TYP

45' MAX

45' MAX

#2 AWG, 7 STRAND BARE COPPER GROUND FOR CHAIN LINK FENCE. FENCE TO BE GROUNDED EVERY 40' MINIMUM. (TYP)

250 MCM SOFT DRAWN BARE COPPER. TYPICAL FOR ALL PERIMETER AND MAIN GRID GROUND CONDUCTORS.

PROPERTY LINE

MASONRY WALL

#4/0 AWG, 19 STRAND BARE COPPER. TYPICAL FOR ALL EQUIPMENT GROUND CONDUCTORS.

#2 AWG, 7 STRAND BARE COPPER GROUND TO THE BARBED WIRE AT TOP OF FENCE. GROUND WIRE TO BE RUN ON THE INSIDE FACE OF THE WALL. (TYPICAL)

⚠ NOTES: CONTRACTOR TO LOCATE EXISTING GROUND GRID AND DIVERT THE RODS AND CONDUCTORS AS NECESSARY. EXACT LOCATION OF DIVERSION TO BE FIELD DETERMINED.

TRANSFORMER T4

TRANSFORMER T3

26'

148'

58'

TIE NEW FIBER OPTIC POLE TO BUILDING RE AWG TO BRANCH GRID

FIBER OPTIC POLE

115' TO WALL

TS1-A

TS1-B

TS2-A

TS2-B

TS2-C

EXISTING EP

FIDDYMENT ROAD

CREST

N0°27'50"W

13/1

12/2

TRANSMISSION

NO.	DATE	ISSUED FOR	BY
7	7/29/03	EXPANSION	KDA
6	11/9/01	AS BUILT	KDA
5	1/09/01	MINOR UPDATE	KVA
4	9/28/00	ADD FIBER OPTIC POLE	KA
3	7/31/00	ADD CB6024 BAY, 60/12KV TX & SWGR	KA
2	8/29/97	AS-BUILT	DP
1	7/3/96	BID	
13A	2/3/26	EWR278-SPARE TRANSFORMER ADDITION	DA
13	1/7/26	PHASE 2/KY4A UPDATE	DA
12	8/10/04	AS BUILT	KDA
11	4/13/04	RESIZE FOUNDATIONS	KDA
10	3/19/04	ISSUE FOR CONSTRUCTION	KDA
9	12/30/03	RDWY RE-ALIGNMENT	KDA
8	9/3/03	ADDED MISSING STRUCTURES	KDA

DESIGNED JDG
DRAWN DMM
CHECKED –
APPROVED WLS
CAD REF. T:/22004/58/58E5-17
SCALE 1" = 40'
WARNING 0 1/2 1 BAR SHOULD MEASURE 1" OR DRAWING IS NOT TO SCALE
LAST EDIT 9/9/97

CITY OF ROSEVILLE INCORPORATED APRIL 10, 1909

RMI RESOURCE MANAGEMENT INTERNATIONAL, INC.
3100 ZINFANDEL DR. SACRAMENTO, CA 95670
SACRAMENTO – PORTLAND – AUSTIN – PHOENIX – ORLANDO – COLUMBUS – ALBANY – WEST PALM BEACH

Roseville Electric
Reliable Energy • Dependable Service
(916) 774-5601

FIDDYMENT SUBSTATION

GROUNDING PLAN

ENG.: M.FOK | APPR.: | SCALE: 1"=40' | JOB NO. 944013
DR.: JJHANSEN | DATE: 2/5/98
ACCOUNT NO. 40001-6130
DRAWING NO. 325C1-26

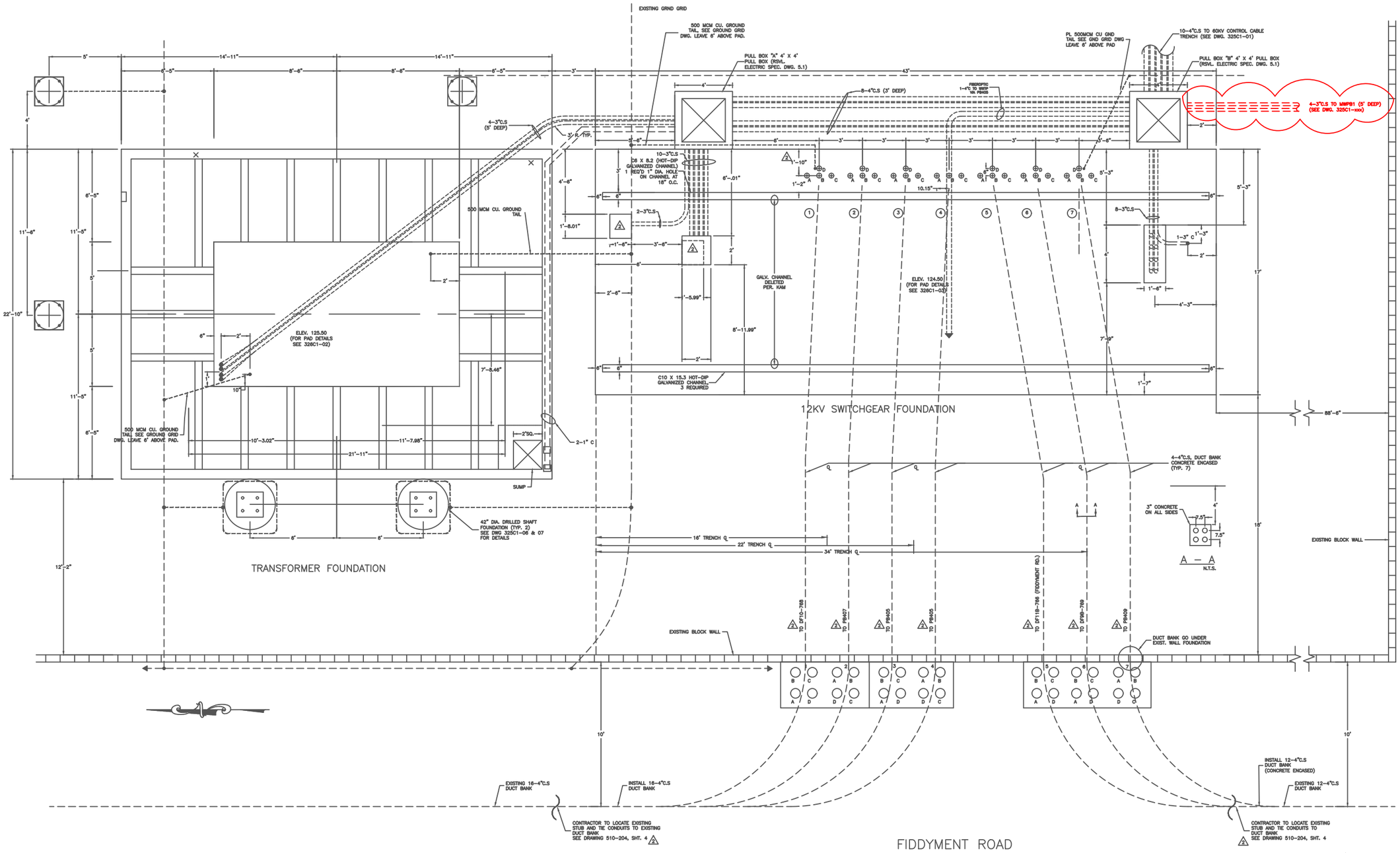

NOTES:

1. CONTRACTOR SHALL LOCATE EXISTING GROUND GRID AND RELOCATE THE GRID CONDUCTORS FOR THE INSTALLATION WORK. SEE GROUND GRID DRAWING NUMBER 325C1-26

FIDDYMENT 60/12KV SUBSTATION

REV	BY	DATE	DESCRIPTION	APPR.
2	KDA	7/19/01	AS-BUILTS	K.Hung
1	KWA	1/09/01	UPDATE	K.HUNG

Roseville Electric
Reliable Energy • Dependable Service
(916) 774-5601

ENG.: K.HUNG	APPR.:	SCALE: 1" = 3'	JOB NO. 000498
DR.: K.ANDREWS		DATE: 7/19/00	

TRANSFORMER AND SWITCHGEAR FOUNDATIONS

ACCOUNT NO. 40002-6130

DRAWING NO. 326C1-01

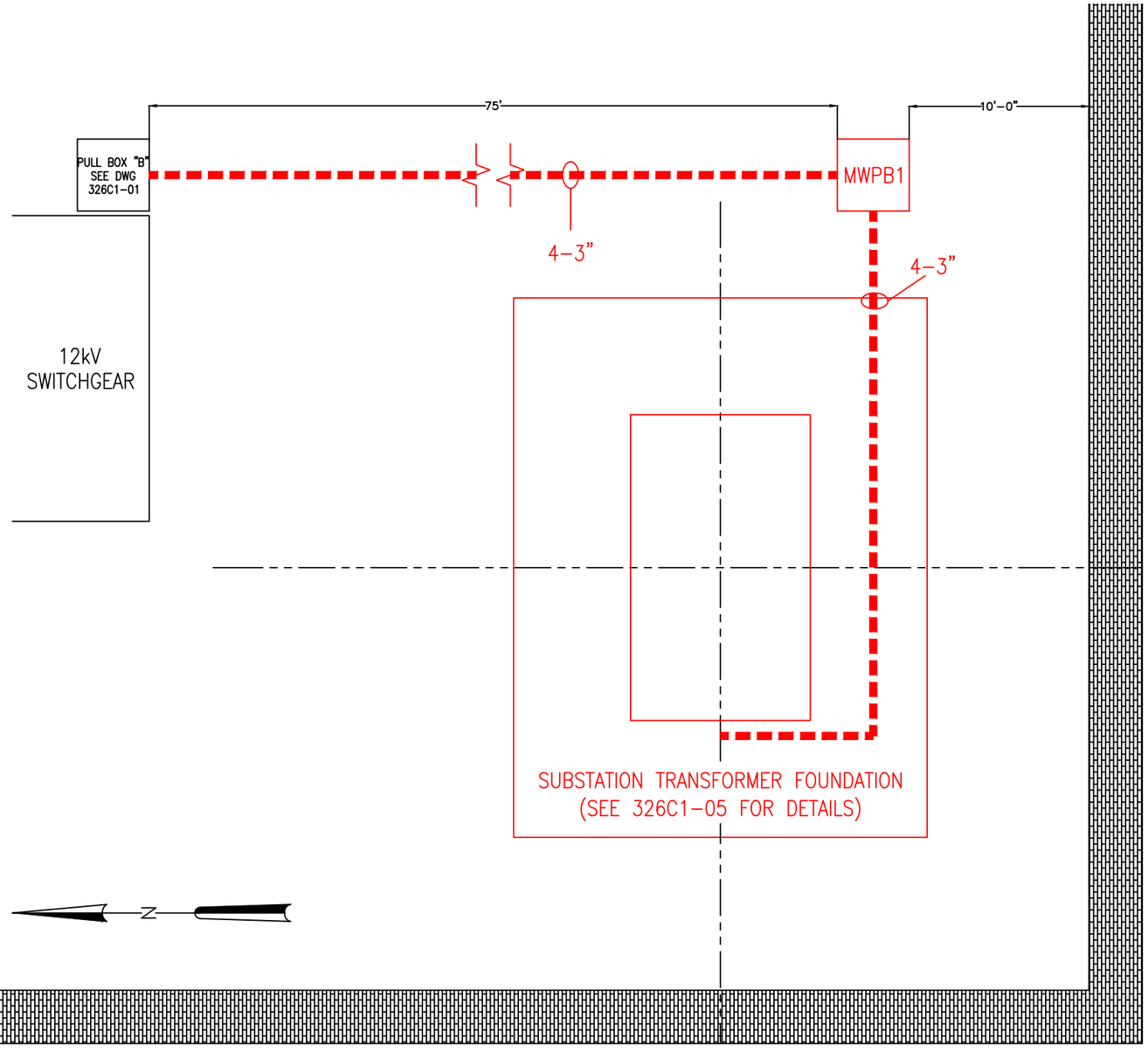

SOUTHWEST CORNER OF
FIDDYMENT SUBSTATION

TYPICAL DETAIL
FOR 2-2"C (NOT TO SCALE)

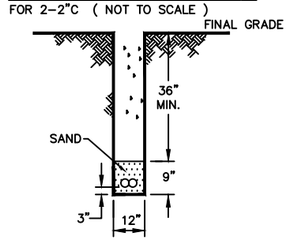

TYPICAL DETAIL
FOR 1-3"C (NOT TO SCALE)

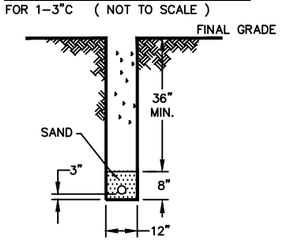

TYPICAL DETAIL
FOR 4-3"C (NOT TO SCALE)

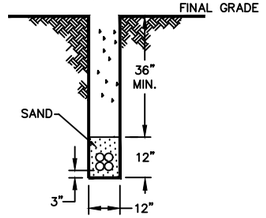

TYPICAL DETAIL
FOR 3-3"C (NOT TO SCALE)

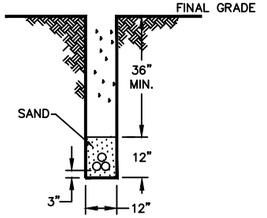

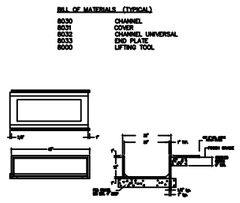

TYPICAL DETAILS OF CONCAST 8030
TRENCH SYSTEM

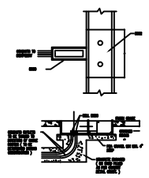

TYPICAL CONCAST TEE CONNECTION

FIDDYMENT SUBSTATION

REV	BY	DATE	DESCRIPTION	APPR.
0	DA	2/4/26	EWR278-SPARE SUBSTATION TRANSFORMER ADDITION	-

CITY OF ROSEVILLE CALIFORNIA
Roseville Electric

TITLE: SPARE XFRM FOUNDATION & CONDUIT PLAN

ENG. DA | APPR. | SCALE NTS
DR. DA | DATE 2/4/26

JOB NO. 500637
ACCOUNT NO.
DRAWING NO. 326C1-04

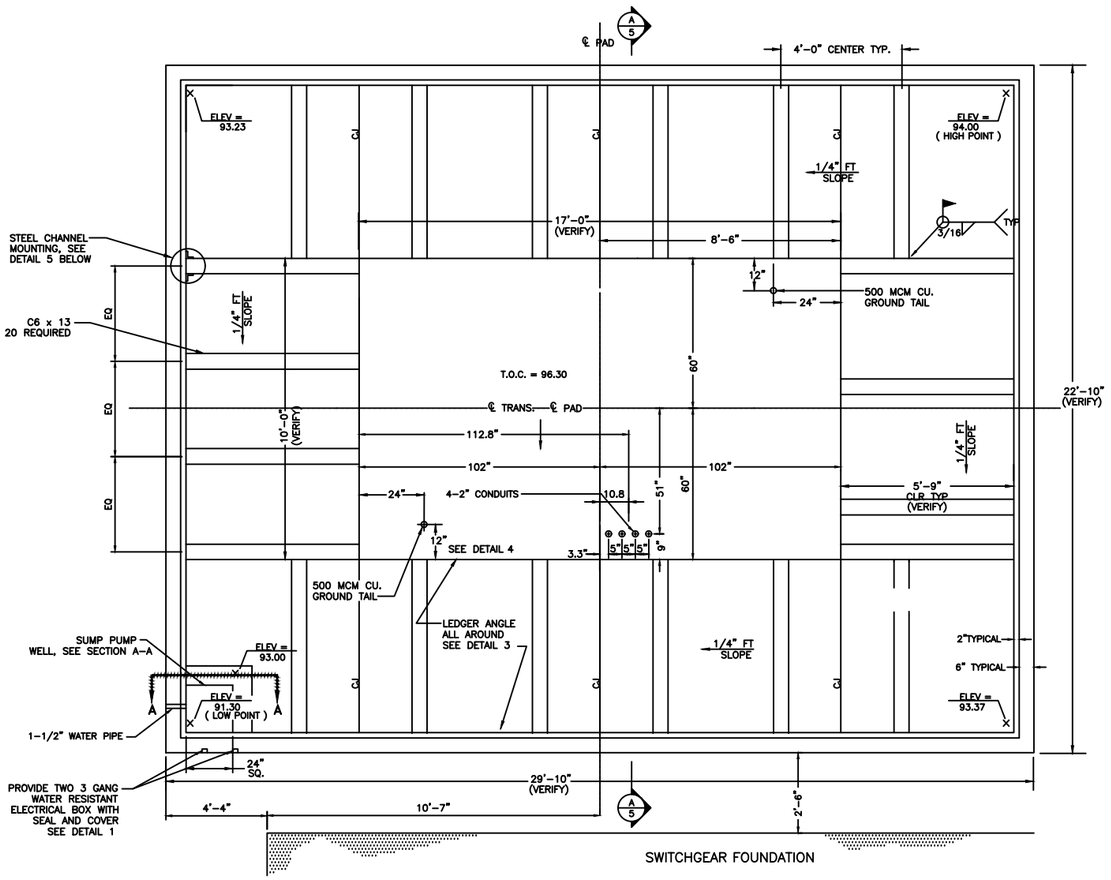

TRANSFORMER PAD – TYPICAL

NOT TO SCALE TWO TOTAL – SEE SITE PLAN

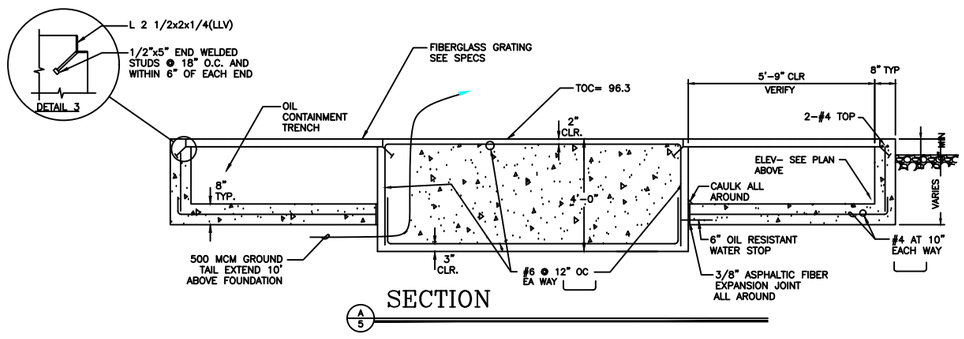

SECTION

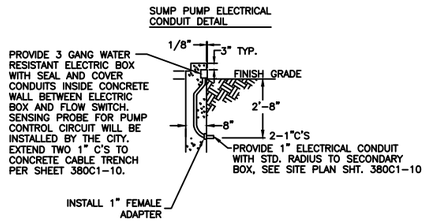

DETAIL 1

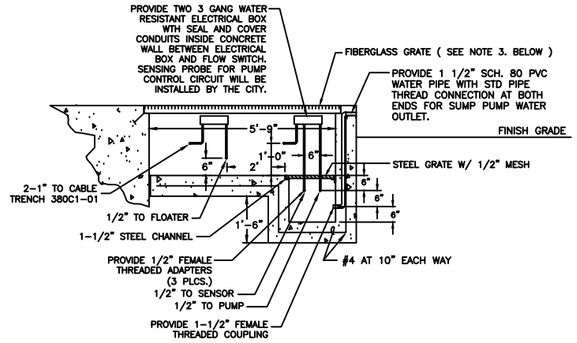

SECTION A-A

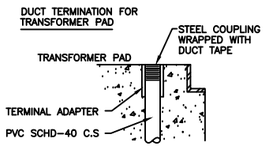

DETAIL 4

NOTES:

1. ALL STEEL SHALL BE HOT DIP GALVANIZED AFTER FABRICATION.
2. CONTRACTOR SHALL PROVIDE AND INSTALL FIBERGLASS GRATES OVER CONTAINMENT TRENCHES AS SHOWN ON THIS DRAWING. FIBER-GLASS GRATING SHALL BE MADE BY IKG IN ACCORDANCE WITH WEST PLAN SUBSTATION CIVIL CONSTRUCTION SPECIFICATIONS SECTION-FIBER GLASS GRATING.
3. CONTRACTOR SHALL CALL FOR INSPECTION BY CITY ENGINEER 24 HOURS PRIOR TO POURING ANY CONCRETE.

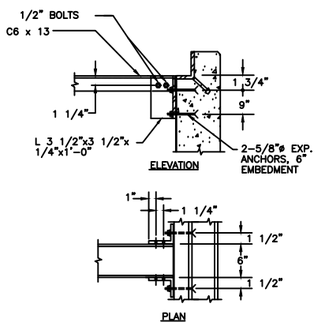

DETAIL 5

SAMPLE DRAWING – NOT FINAL DESIGN

FIDDYMENT SUBSTATION

REV	BY	DATE	DESCRIPTION	APPR.
0	DA	2/4/26	EWR278-SPARE SUBSTATION TRANSFORMER	–

ENG.:P.TRAN APPR.: SCALE: NONE JOB NO. 500637
DR.: K.ANDREWS DATE: 5/13/05 ACCOUNT NO. –

Roseville Electric
Reliable Energy • Dependable Service
(916) 774-5601

TRANSFORMER PAD & SUMP PUMP DETAILS

DRAWING NO. 326C1-05

KLEINFELDER

GEOTECHNICAL INVESTIGATION REPORT
PROPOSED 230-60 kV FIDDYMENT SUBSTATION
CITY OF ROSEVILLE
ROSEVILLE, CALIFORNIA

December 20, 1994

This document was prepared for use only by the client, only for the purposes stated, and within a reasonable time from issuance. Non-commercial, educational, and scientific use of this report by regulatory agencies is regarded as a "fair use" and not a violation of copyright. Regulatory agencies may make additional copies of this document for internal use. Copies may also be made available to the public as required by law. The reprint must acknowledge the copyright and indicate that permission to reprint has been received.

Copyright 1994 Kleinfelder, Inc.

APPENDIX A

FIELD INVESTIGATION AND LABORATORY TESTING

FIELD INVESTIGATION

General

The subsurface conditions at the site were explored on October 27 and 28, 1994, by drilling 14 borings to depths ranging from 20 to 21-1/2 feet below existing grade. Borings were drilled using Mobile B-61 and B-53 truck-mounted drill rigs equipped with a 4-inch-diameter solid-stem auger. The locations of borings performed for this investigation are shown on Plate 2 of the report. Designation "B-4" was omitted from the drilling program and is not shown on Plate 2.

IMPORTANT NOTE: Borings were located in the field by visual sighting and/or pacing from existing site features. Therefore, the location of borings shown on Plate 2 should be considered highly approximate and may vary from that indicated on the plate.

Our engineer maintained a log of the borings, visually classified soils encountered according to the Unified Soil Classification System (see Plate A-1), and obtained relatively undisturbed and bulk samples of the subsurface materials. A key to the Logs of Borings is presented on Plate A-2 of this appendix; Logs of Borings are presented on Plates A-3 through A-16.

Sampling Procedures

Soil samples were obtained from the borings using a Modified California Sampler driven 18 inches (unless otherwise noted) into undisturbed soil using a 30-inch drop of a 140-pound hammer. Blow counts were recorded at 6-inch intervals for each sample attempt and are reported on the logs in terms of blows-per-foot for the last foot of penetration. Soil samples obtained from the borings were packaged and sealed in the field to reduce moisture loss and disturbance, and returned to our Sacramento laboratory for further testing. After borings were completed, they were backfilled with the drill cuttings.

Copyright 1994 Kleinfelder, Inc.

LABORATORY TESTING

General

Laboratory tests were performed on selected samples to aid in soil classification and to evaluate physical properties of the soils which may affect the geotechnical aspects of project design and construction. A description of the laboratory testing program is presented below; a summary of all laboratory tests performed is presented on the Summary of Laboratory Tests, Plate A-17.

Moisture Content and Dry Unit Weight

Moisture content and dry unit weight tests were performed to evaluate moisture-conditioning requirements during site preparation and earthwork grading; soil overburden, and active and passive earth pressures; and relative soil strength and compressibility. Moisture content was evaluated in general accordance with ASTM Test Method D 2216; dry unit weight was evaluated using procedures similar to ASTM Test Method D 2937. Results of these tests are presented on the logs and are summarized on the Summary of Laboratory Tests.

Sieve Analysis

Sieve analyses were performed to evaluate the gradational characteristics of the material and to aid in soil classification. Tests were performed in general accordance with ASTM Test Method C 136. Results of these tests are presented on the logs and are summarized on the Summary of Laboratory Tests.

Atterberg Limits

Atterberg Limits tests were performed to aid in soil classification and to evaluate the plasticity characteristics of the material. Additionally, test results were correlated to published data to evaluate the shrink/swell potential of near-surface site soils. Tests were performed in general accordance with ASTM Test Method D 4318. Results of these tests are presented on the logs and are summarized on the Summary of Laboratory Tests.

Copyright 1994 Kleinfelder, Inc.

pH and Resistivity

pH and resistivity tests were performed on soil samples obtained near anticipated foundation and underground utility depths to evaluate soil corrosivity effects on buried concrete and steel. Test procedures were in general accordance with California Tests 643 and 532. Results of these tests are presented on the Summary of Laboratory Tests.

Direct Shear

Direct shear tests were performed on relatively undisturbed samples to evaluate the drained shear strength of the site soils. Samples were tested in a near-saturated condition in general accordance with ASTM Test Method D 3080 (consolidated, drained). Results of these tests are presented on Plates A-18 and A-19.

Expansion Index

An expansion index (EI) test was performed on a remolded, fine-grained soil sample considered representative of the anticipated floor slab subgrade. Test procedures were in general accordance with the Uniform Building Code (UBC) Standard 29-2. Results of this test are presented on the Summary of Laboratory Tests and may be compared to the table presented below to qualitatively evaluate the expansion potential of the near-surface site soils.

Expansion Index	Potential Expansion
0-20	Very low
21-50	Low
51-90	Medium
91-130	High
Above 130	Very high

Compaction

Three compaction tests were performed on near-surface bulk soil samples to evaluate maximum dry density and optimum moisture content. Test procedures were in general accordance with ASTM Test Method D 1557. Results of these tests are presented on the Summary of Laboratory Tests and Plate A-20.

Copyright 1994 Kleinfelder, Inc.

UNIFIED SOIL CLASSIFICATION SYSTEM

MAJOR DIVISIONS			USCS SYMBOL	TYPICAL DESCRIPTIONS
COARSE GRAINED SOILS (MORE THAN HALF OF MATERIAL IS LARGER THAN THE #200 SIEVE)	GRAVELS MORE THAN HALF COARSE FRACTION IS LARGER THAN THE #4 SIEVE	CLEAN GRAVELS WITH LITTLE OR NO FINES	GW	WELL-GRADED GRAVELS, GRAVEL-SAND MIXTURES WITH LITTLE OR NO FINES
			GP	POORLY-GRADED GRAVELS, GRAVEL-SAND MIXTURES WITH LITTLE OR NO FINES
		GRAVELS WITH OVER 12% FINES	GM	SILTY GRAVELS, GRAVEL-SILT-SAND MIXTURES
			GC	CLAYEY GRAVELS, GRAVEL-SAND-CLAY MIXTURES
	SANDS MORE THAN HALF COARSE FRACTION IS SMALLER THAN THE #4 SIEVE	CLEAN SANDS WITH LITTLE OR NO FINES	SW	WELL-GRADED SANDS, SAND-GRAVEL MIXTURES WITH LITTLE OR NO FINES
			SP	POORLY-GRADED SANDS, SAND-GRAVEL MIXTURES WITH LITTLE OR NO FINES
		SANDS WITH OVER 12% FINES	SM	SILTY SANDS, SAND-GRAVEL-SILT MIXTURES
			SC	CLAYEY SANDS, SAND-GRAVEL-SILT MIXTURES
FINE GRAINED SOILS (MORE THAN HALF OF MATERIAL IS SMALLER THAN THE #200 SIEVE)	SILTS AND CLAYS LIQUID LIMIT LESS THAN 50		ML	INORGANIC SILTS & VERY FINE SANDS, SILTY OR CLAYEY FINE SANDS, CLAYEY SILTS WITH SLIGHT PLASTICITY
			CL	INORGANIC CLAYS OF LOW TO MEDIUM PLASTICITY, GRAVELLY CLAYS, SANDY CLAYS, SILTY CLAYS, LEAN CLAYS
			OL	ORGANIC SILTS & ORGANIC SILTY CLAYS OF LOW PLASTICITY
	SILTS AND CLAYS LIQUID LIMIT GREATER THAN 50		MH	INORGANIC SILTS, MICACEOUS OR DIATOMACEOUS FINE SAND OR SILT
			CH	INORGANIC CLAYS OF HIGH PLASTICITY, FAT CLAYS
			OH	ORGANIC CLAYS & ORGANIC SILTS OF MEDIUM-TO-HIGH PLASTICITY
HIGHLY ORGANIC SOILS			PT	PEAT, HUMUS, SWAMP SOILS WITH HIGH ORGANIC CONTENTS

KLEINFELDER

PROJECT NO. 23-481415.A00

SOIL CLASSIFICATION SYSTEM
230-60kv FIDDYMENT SUBSTATION
CITY OF ROSEVILLE
ROSEVILLE, CALIFORNIA

PLATE

A-1

Copyright Kleinfelder, Inc. 1994

LOG SYMBOLS

	BULK / BAG SAMPLE	-4	PERCENT FINER THAN THE NO. 4 SIEVE (ASTM Test Method C 136)
	MODIFIED CALIFORNIA SAMPLER (2-1/2 inch outside diameter)	-200	PERCENT FINER THAN THE NO. 200 SIEVE (ASTM Test Method C 117)
	CALIFORNIA SAMPLER (3 inch outside diameter)	LL	LIQUID LIMIT (ASTM Test Method D 4318)
	STANDARD PENETRATION SPLIT SPOON SAMPLER (2 inch outside diameter)	PI	PLASTICITY INDEX (ASTM Test Method D 4318)
	SHELBY TUBE (3 inch outside diameter)	EI	EXPANSION INDEX (UBC Standard 29-2)
	CORE BARREL (1-3/4 inch inside diameter)	COL	COLLAPSE POTENTIAL
	WATER LEVEL (level after completion)	UC	UNCONFINED COMPRESSION
	WATER LEVEL (level where first encountered)	MC	MOISTURE CONTENT

GENERAL NOTES

1. Lines separating strata on the logs represent approximate boundaries only. Actual transitions may be gradual.
2. No warranty is provided as to the continuity of soil conditions between individual sample locations.
3. Logs represent general soil conditions observed at the point of exploration on the date indicated.
4. In general, Unified Soil Classification designations presented on the logs were evaluated by visual methods only. Therefore, actual designations (based on laboratory tests) may vary.

KLEINFELDER	LOG KEY 230-60kv FIDDYMENT SUBSTATION CITY OF ROSEVILLE ROSEVILLE, CALIFORNIA	PLATE A-2
PROJECT NO. 23-481415.A00		

Copyright Kleinfelder, Inc. 1994

Date Completed: 10/27/94

Logged By: S. Tracy

Total Depth: 21 feet

Surface Conditions: Vegetation consisting of low-to-high grasses.

Groundwater: No free groundwater encountered.

Depth, ft	FIELD: Sample Type	FIELD: Sample No.	FIELD: Blows/ft	FIELD: Pen, tsf	LABORATORY: Dry Density, pcf	LABORATORY: Moisture Content, %	LABORATORY: Other Tests	DESCRIPTION
								Approximate Surface Elevation (ft):
		1A						**Sandy SILT** (ML): Red-brown to gray, moist, very dense, strongly cemented, fine grained sand
		2A 2B	50/3"		90	20		
5								with interbed of fine silty sand
		3A 3B	50/6"					
10		4A 4B	50/3"					
15								SAND (SP): Gray and black, slightly moist, medium dense, fine to coarse grained
		5A 5B	63					
20			50/5"					no recovery
								Boring completed at a depth of approximately 21 feet below existing site grade.
25								

KLEINFELDER

PROJECT NO. 23-481415.A00

LOG OF BORING B- 1
230-60kv FIDDYMENT SUBSTATION
CITY OF ROSEVILLE
ROSEVILLE, CALIFORNIA

PLATE 1 of 1

A-3

Copyright Kleinfelder, Inc. 1994

Date Completed: 10/27/94

Logged By: S. Tracy

Total Depth: 20-1/2 feet

Surface Conditions: Vegetation consisting of low-to-high grasses.

Groundwater: No free groundwater encountered.

Depth, ft	FIELD: Sample Type	FIELD: Sample No.	FIELD: Blows/ft	FIELD: Pen, tsf	LABORATORY: Dry Density, pcf	LABORATORY: Moisture Content, %	LABORATORY: Other Tests	DESCRIPTION
								Approximate Surface Elevation (ft):
		1A 1B	32		109	7		**Silty SAND** (SM): Red-brown, moist, medium dense, fine grained
5		2A 2B	13				-200=21%	grades yellow-brown, fine to medium grained, with decreasing silt
								Silty SAND (SM): Brown, moist, very dense, fine to coarse grained
10		3A 3B	88/11"					
								Sandy SILT (ML): Yellow-brown, moist, very dense, fine to medium grained sand
15		4A 4B	75/8"					
								SAND (SP): Brown, moist, medium dense, fine to medium grained
20		5A 5B	59					**Sandy SILT** (ML): Gray, slightly moist, hard, fine grained sand
								Boring completed at a depth of approximately 20-1/2 feet below existing site grade.
25								

KLEINFELDER

PROJECT NO. 23-481415.A00

LOG OF BORING B- 2
230-60kv FIDDYMENT SUBSTATION
CITY OF ROSEVILLE
ROSEVILLE, CALIFORNIA

PLATE 1 of 1

A-4

Copyright Kleinfelder, Inc. 1994

Copyright Kleinfelder, Inc. 1994

KLEINFELDER

PROJECT NO. 23-481415.A00

SUMMARY OF LABORATORY TESTS
230-60kv FIDDYMENT SUBSTATION
CITY OF ROSEVILLE
ROSEVILLE, CALIFORNIA

PLATE 1 of 2

A-17

BORING NO.	SAMPLE NO.	SAMPLE DEPTH (ft)	DRY UNIT WEIGHT (pcf)	MOISTURE CONTENT (% of dry weight)	PARTICLE SIZE SIEVE SIZE - Percent Passing						ATTERBERG LIMITS		OTHER TESTS
					1"	3/4"	#4	#10	#40	#200	L.L.	P.I.	
B-1	2B	2½	90	20									
B-2	1B	1	109	7									
B-2	2B	5								21			
B-3	2B	2	87	6						54			
B-5	1A	½-3											Minimum resistivity=4,200 ohm-cm @ pH=6.3
B-5	1A	½-3											Compaction Curve See Plate A-20
B-5	2B	1	91	17									
B-6	3B	5½	74	27									Direct Shear See Plate A-18
B-6	4A	10½								19			
B-6	5B	15½	87	31									
B-7	2B	5½	101	18									
B-7	3A	10½	77	40									
B-8	2B	2									34	18	
B-9	1A	½-3											Compaction Curve See Plate A-20
B-9	2B	1	106	7						49			
B-9	3B	5	107	14									Direct Shear See Plate A-19
B-10	1A	1½-4½									27	13	Expansion Index = 78 @ 107.1 pcf & 11.0% MC
B-10	1A	1½-4½									27	13	Minimum resistivity=2,300 ohm-cm @ pH=6.5
B-10	1A	1½-4½									27	13	Compaction Curve See Plate A-20
B-10	2B	3	113	15									

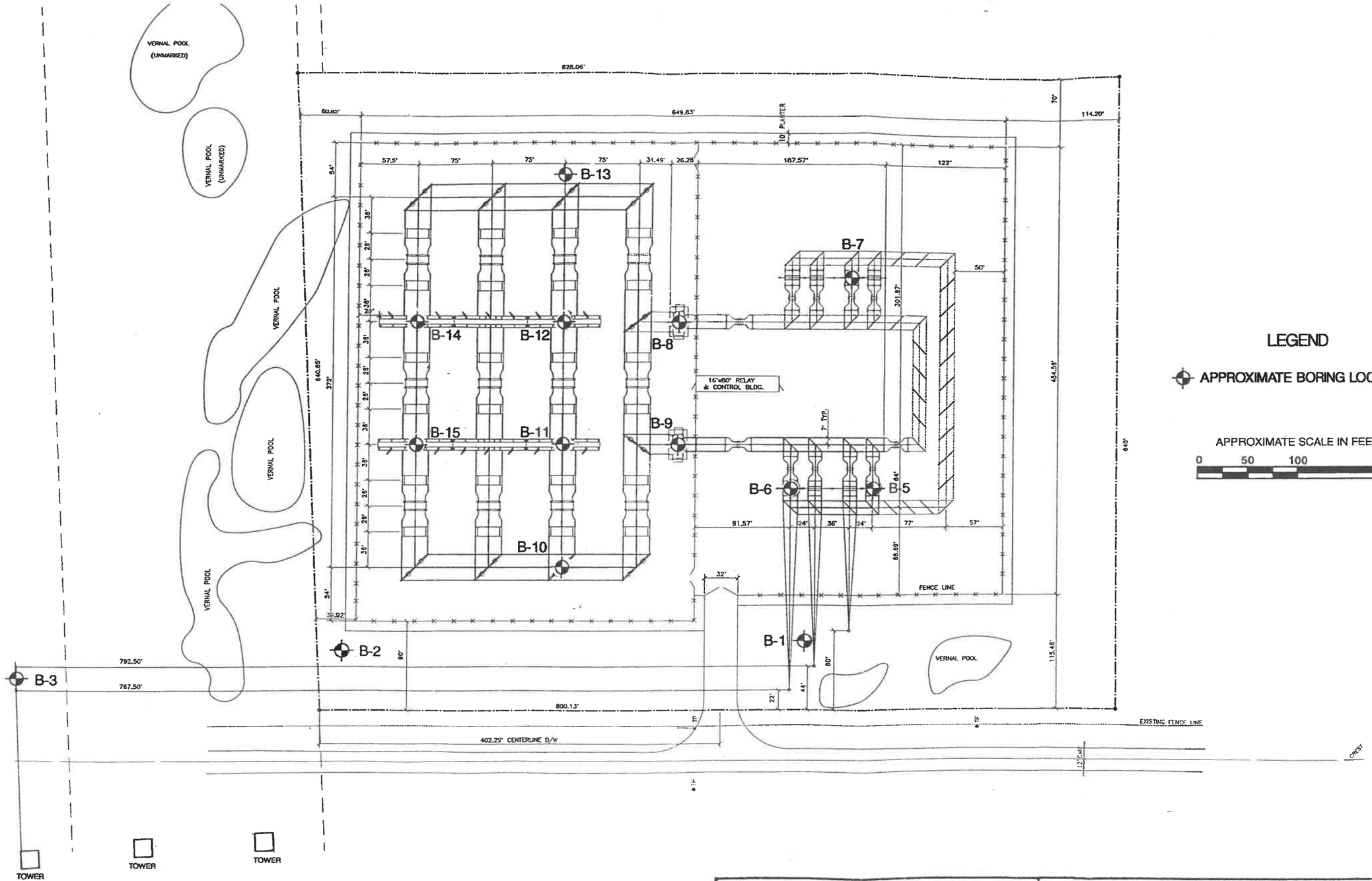

LEGEND

APPROXIMATE BORING LOCATION

APPROXIMATE SCALE IN FEET

0 50 100 200

REFERENCE: "SUBSTATION PLAN";
by Resource Management International, Inc.; dated 10/6/94.

NOTE: DESIGNATION "B-4" WAS NOT USED DURING THIS STUDY.

KLEINFELDER

PROJECT NO. 23-481415.A00

BORING LOCATION MAP
230-60kv FIDDYMENT SUBSTATION
CITY OF ROSEVILLE
ROSEVILLE, CALIFORNIA

PLATE 2

Copyright Kleinfelder, Inc. 1994

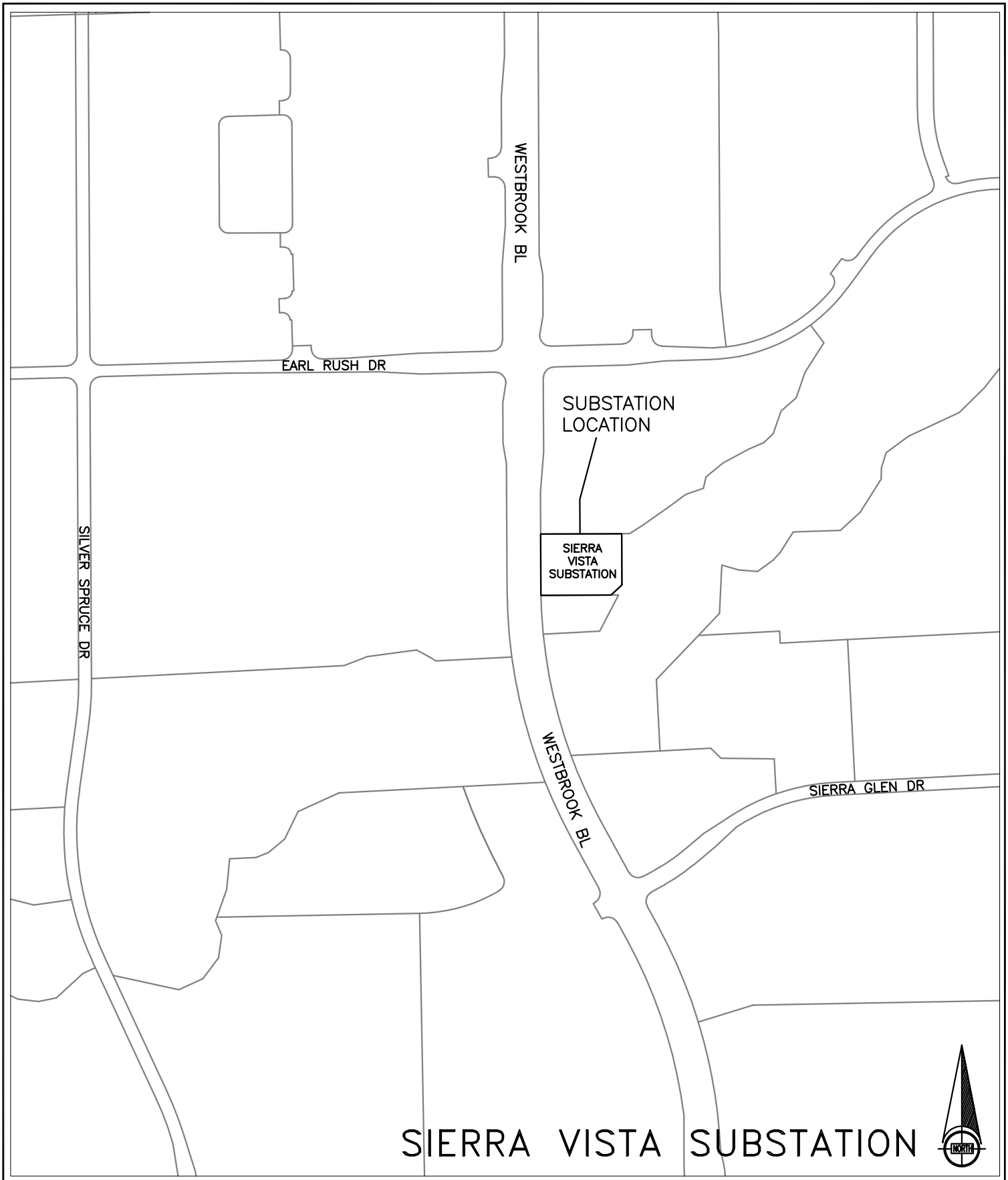

SIERRA VISTA SUBSTATION

CITY OF ROSEVILLE CALIFORNIA

Roseville Electric

ENG.: M. LARKIN	APPR.:	SCALE: NTS	JOB NO. 174105
DR.: C. SHIRLEY		DATE: 9/5/19	
SUBSTATION LOCATION PLAN			ACCOUNT NO. 41001–6130
			DRAWING NO. 395C1–00

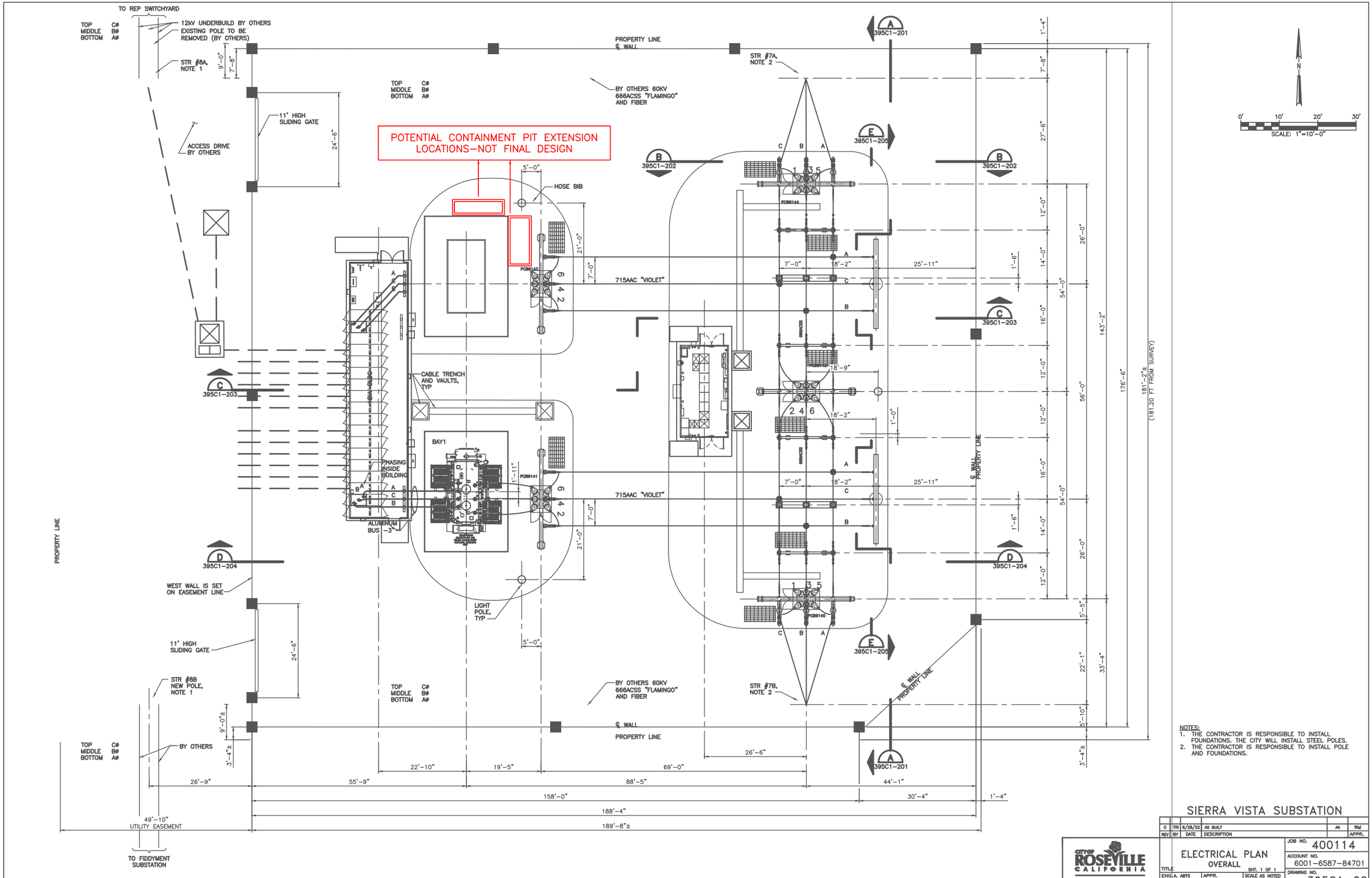

NOTES:
1. THE CONTRACTOR IS RESPONSIBLE TO INSTALL FOUNDATIONS. THE CITY WILL INSTALL STEEL POLES.
2. THE CONTRACTOR IS RESPONSIBLE TO INSTALL POLE AND FOUNDATIONS.

SIERRA VISTA SUBSTATION

REV	BY	DATE	DESCRIPTION		APPR.
0	TR	6/28/22	AS BUILT	AA	TRL

CITY OF ROSEVILLE CALIFORNIA
Roseville Electric

ELECTRICAL PLAN
OVERALL

TITLE
SHT. 1 OF 1
ENG. A. ABTS APPR.
DR. M. GUIDOTTI
SCALE AS NOTED
DATE 10/30/17

JOB NO. 400114
ACCOUNT NO. 6001-6587-84701
DRAWING NO. 395C1-02

PRECISE GRADING PLAN

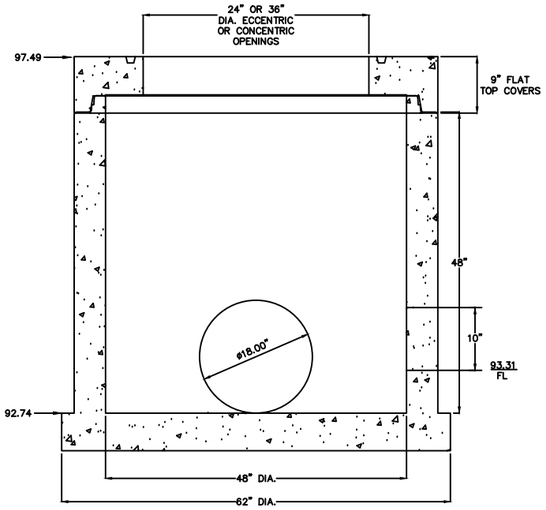

STORM DRAIN MANHOLE
N.T.S.

LEGEND

BLDG.	–	BUILDING
℄	–	CENTER LINE
EG	–	EXISTING GROUND
FS	–	FINISHED SURFACE
FG	–	FINISHED GRADE
INV	–	INVERT
P	–	PROPERTY LINE
SD	–	STORMDRAIN
TC	–	TOP OF CURB
TG	–	TOP OF GRADE
TYP.	–	TYPICAL
(XXX.XX)	–	EXISTING ELEVATION
XXX.XX	–	PROPOSED ELEVATION
GB	–	GRADE BREAK
HP	–	HIGH POINT
LP	–	LOW POINT
	–	PROPERTY LINE
	–	BIORETENTION PLANTER, REFER TO SHEET 395C2–201 FOR DETAILS

CONSTRUCTION NOTES:

1. CONSTRUCT 6" THICK ASPHALT PAVEMENT ON 6" CLASS 2 BASEROCK PER SOILS REPORT RECOMMENDATIONS
2. CONSTRUCT SCREEN WALL PER SEPARATE STRUCTURAL PLAN
3. INSTALL 6" OF CRUSHED ROCK OVER 2" THICK GUNITE
4. CONSTRUCT MODIFIED TYPE 2 VERTICAL CURB & GUTTER PER SECTION G–G, HEREON
5. CONSTRUCT 1" WEEP HOLE, 5' O.C. AS SHOWN IN PLAN VIEW.
6. CONSTRUCT 24" V–GUTTER, SEE SECTION E–E
7. TRENCH DRAIN PER LID PLAN, NDS CHANNEL DRAIN #830, END CAP #831, SIDE OUTLET #832, AND GRATE #836
8. 3" PVC SCHEDULE 40
9. VARIABLE HEIGHT RETAINING CURB

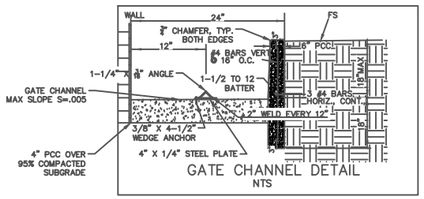

GATE CHANNEL DETAIL
NTS

NOTES:

CONTRACTOR TO FIELD VERIFY DIMENSIONS AND LOCATION OF THE V–TRACK

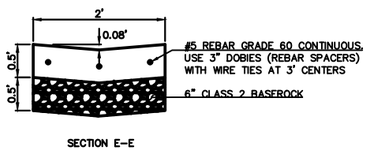

SECTION E–E

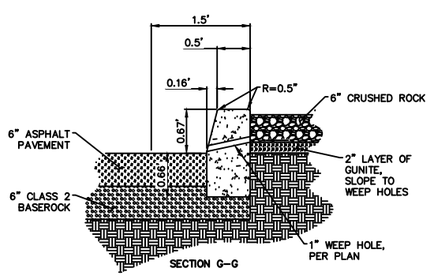

SECTION G–G

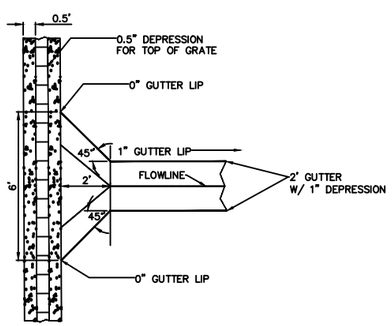

GUTTER TRANSITION AT TRENCH DRAIN
N.T.S.

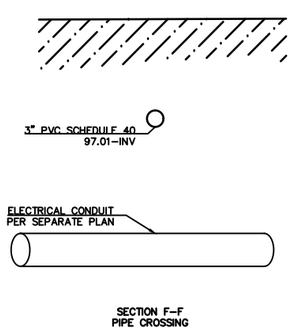

SECTION F–F
PIPE CROSSING

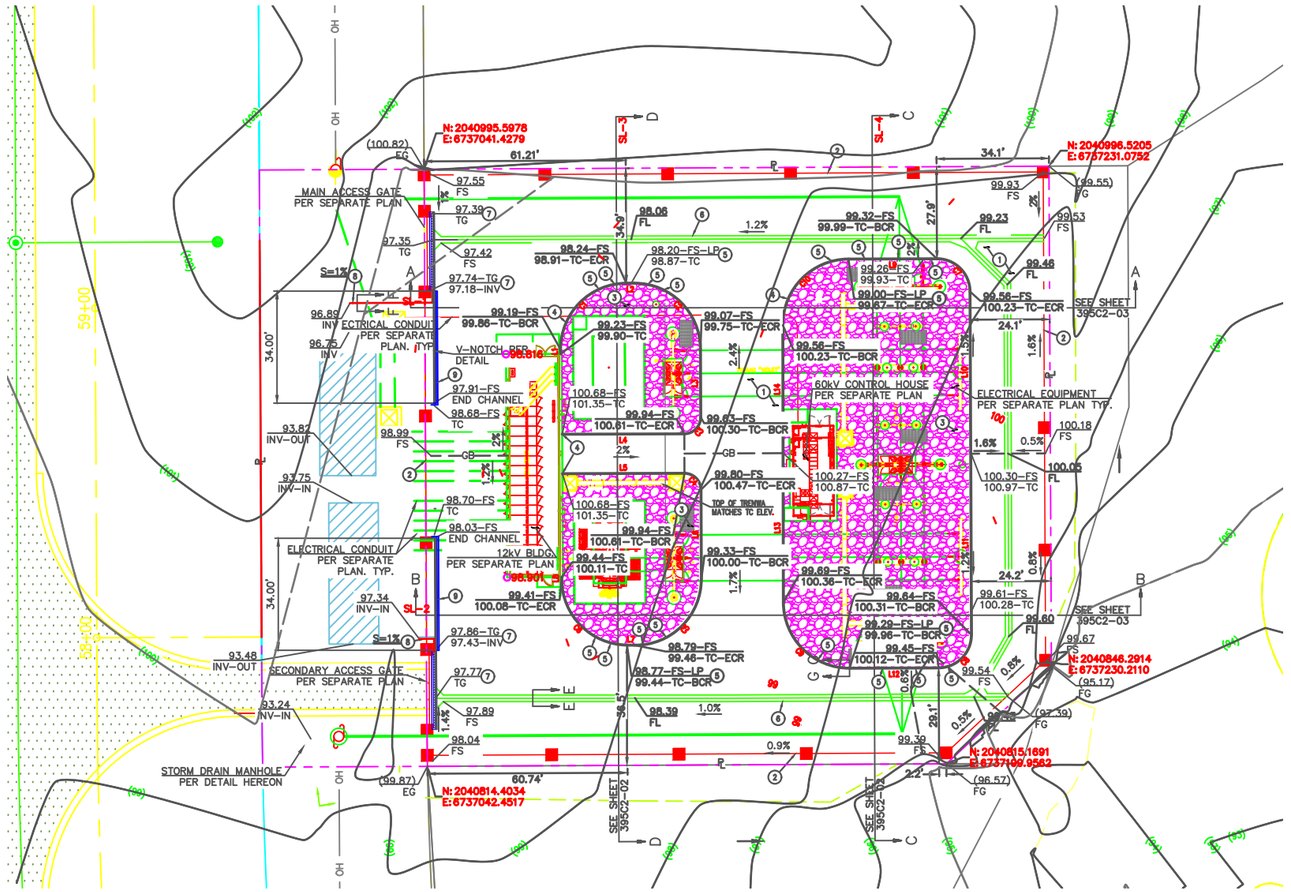

LINE TABLE		
LINE #	LENGTH	BEARING
L1	1.35	N00°16'44.00"W
L2	2.45	S89°50'13.64"W
L3	20.78	S00°14'14.07"E
L4	37.07	N89°49'21.52"E
L5	37.06	N89°50'13.64"E
L6	27.10	N00°14'14.07"W
L7	2.39	N89°27'26.60"W
L8	0.72	S00°16'44.00"E
L9	26.86	S89°49'17.42"W
L10	48.80	N00°13'58.56"W
L11	55.35	N00°14'46.62"W
L12	27.05	N89°48'09.28"E
L13	45.29	S00°07'17.93"E
L14	38.87	S00°07'18.43"E

CURVE TABLE				
CURVE #	LENGTH	RADIUS	DELTA	TANGENT
C1	31.46'	20.00'	090°06'58"	20.04'
C2	31.39'	20.00'	089°55'32"	19.97'
C3	7.86'	5.00'	090°03'36"	5.01'
C4	7.85'	5.00'	089°55'32"	4.99'
C5	31.69'	20.00'	090°46'47"	20.27'
C6	31.13'	20.00'	089°10'43"	19.72'
C7	15.70'	10.00'	089°56'44"	9.99'
C8	15.72'	10.00'	090°02'56"	10.01'
C9	31.44'	20.00'	090°04'33"	20.03'
C10	31.40'	20.00'	089°56'36"	19.98'

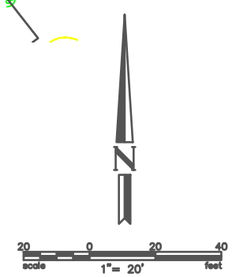

SIERRA VISTA SUBSTATION

REV	BY	DATE	DESCRIPTION	AA	TM/ APPR.
0	TRI	6/28/22	AS BUILT		

CITY OF ROSEVILLE CALIFORNIA
Roseville Electric

TITLE: PRECISE GRADING PLAN — SHT. 1 OF 3

ENG.A. ABTS | APPR. | SCALE 1"=20'–0"
DR. M. GUIDOTTI | DATE 10/30/17

JOB NO. 400114
ACCOUNT NO. 6001–6587–84701
DRAWING NO. 395C2–01

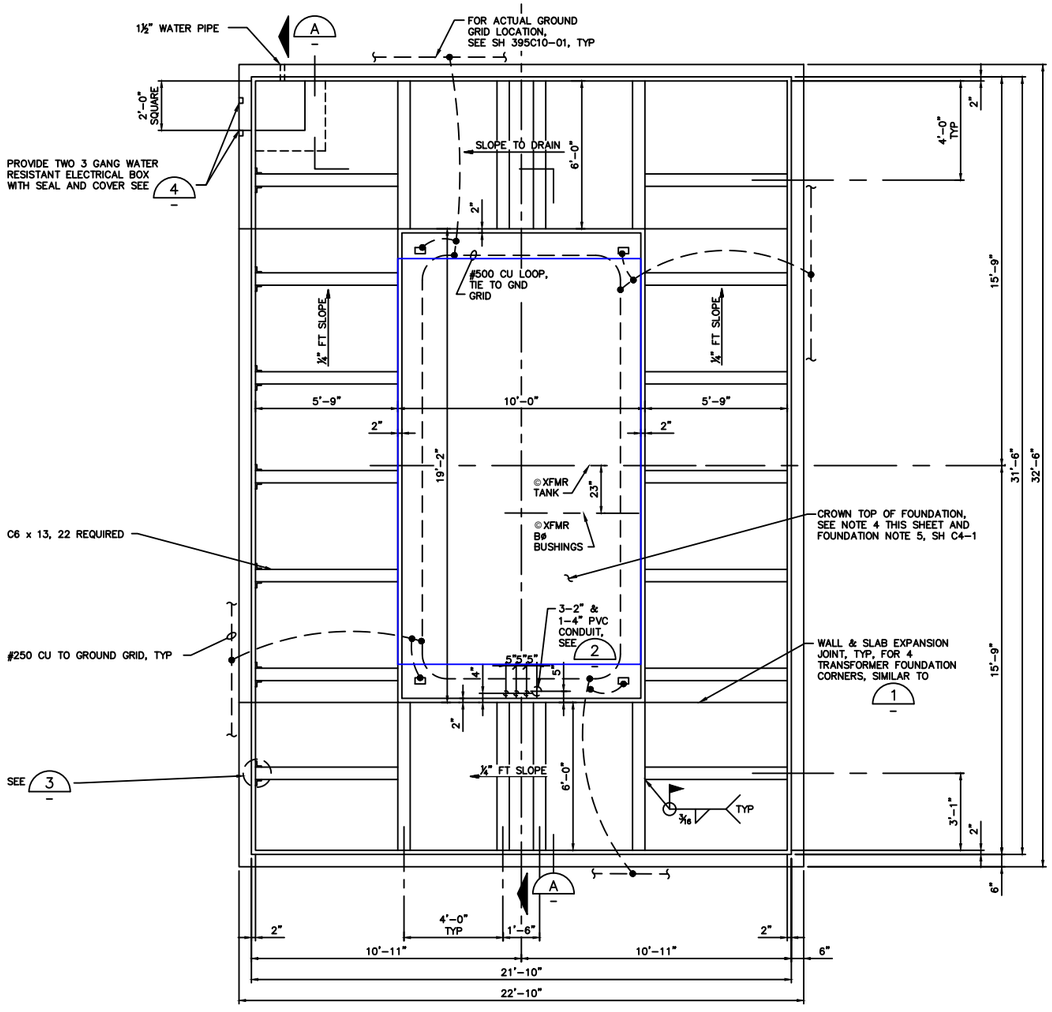

NOTES:
ANCHOR TRANSFORMER TO PAD WITH (2) 1" ø THREADED RODS AT EACH OF (8) PROVIDED ANCHOR BRACKETS. EMBED 16" MIN WITH HILTI HIT RE-500 V3 EPOXY.

TRANSFORMER OIL CONTAINMENT PLAN – TYPE T1

3/8"=1'-0"

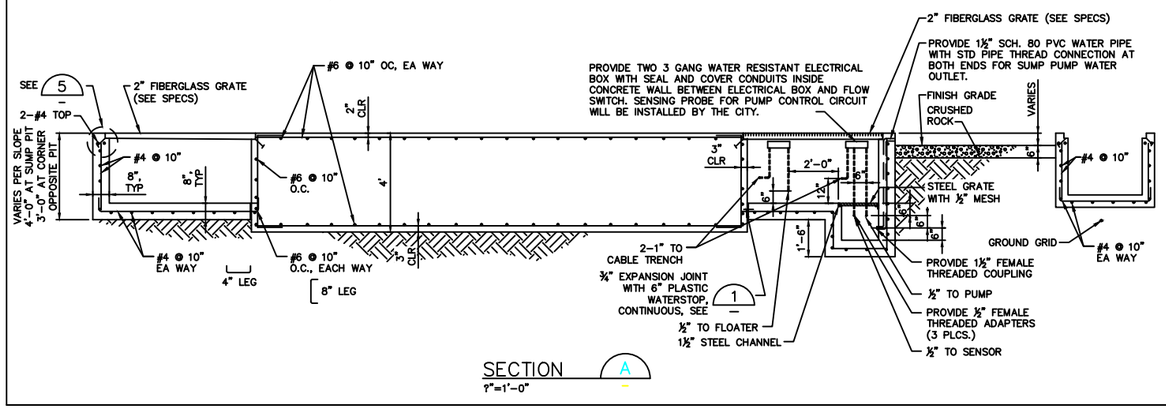

SECTION A

?"=1'-0"

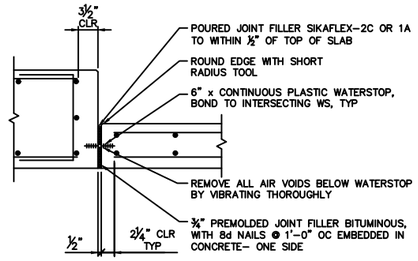

FOUNDATION/SLAB EXPANSION JOINT

DETAIL 1
3/4"=1'-0"

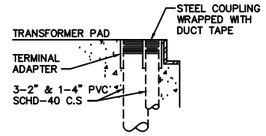

TRANSFORMER PAD DUCT TERMINATION

DETAIL 2
3/4"=1'-0"

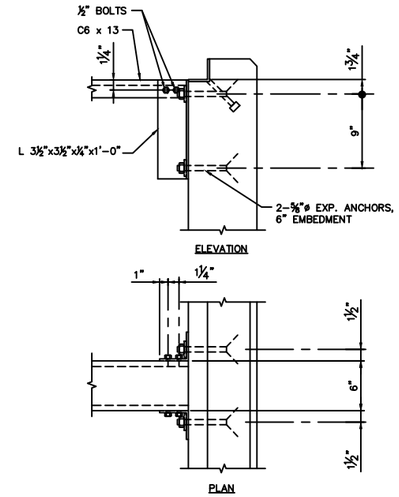

STEEL CHANNEL MOUNTING

DETAIL 3
1"=1'-0"

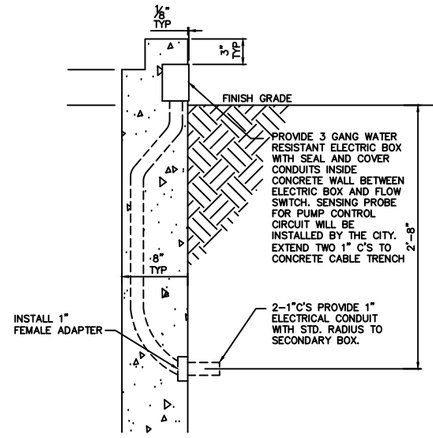

SUMP PUMP ELECTRICAL CONDUIT

DETAIL 4
1"=1'-0"

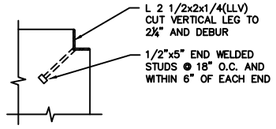

DETAIL 5
1"=1'-0"

NOTES:
1. STANCOR FIBERGLASS BASIN, 36" DIA X 60" DEEP. WITH ¼" AL SOLID, CHECKERED PLATE LID 40" FLANGE, 38 " BOLT CIRCLE. FOUR HUBS:
   (1) 2" AT 12:00 O'CLOCK 12" FROM TOP. (THREADED FOR CONNECTION FROM BOTH SIDES) ANTI-FLOATATION FLANGE AT BOTTOM OF BASIN.
   (1) 3" AT 3:00 O'CLOCK 18.2" FROM TOP.
   (1) 2" AT 5:30 O'CLOCK 36" FROM TOP.
   (1) 3" AT 6:00 O'CLOCK 18.2" FROM TOP.
2. REFER TO PLAN VIEW FOR ACTUAL ORIENTATION OF SUMP CONNECTIONS.
3. HUB SHALL BE CAPABLE OF THREADED CONNECTIONS FROM BOTH SIDES.
4. TRANSFORMER FOUNDATION TO HAVE SLIGHT (⅛"–1/4") CROWN TO ASSURE THERE IS NO SURFACE WATER POOLING.
5. TRANSFORMER OIL 7,100 GAL
   4" OF RAIN FALL 1,247 GAL
   TOTAL 8,347 GAL
   MOAT CAPACITY 9,767 GAL [120% TRANSFORMER OIL (8520 GAL) + 4" RAIN]
6. FOR LOCATION OF BASELINES, SEE PLOT PLAN, SH 395C1-02
7. COORDINATE CONDUIT AND GROUND GRID PLACEMENT WITH ELECTRICAL INSTALLATION CONTRACTOR
8. TRANSFORMER FOUNDATION SURFACE SHALL HAVE SLIGHT CROWN AND HAVE A SMOOTH FINISH. ALL OTHER FOUNDATIONS SHALL HAVE A LIGHT BROOM FINISH.

CONCRETE

1. CONCRETE WORK SHALL CONFORM TO ACI 318-11. IN ADDITION, HOT WEATHER CONCRETING SHALL CONFORM TO ACI 305 AND COLD WEATHER CONCRETING SHALL CONFORM TO ACI 306 REQUIREMENTS.
2. CONCRETE STRENGTH AND MIX REQUIREMENTS: ALL CONCRETE SHALL HAVE A MIN 28-DAY COMPRESSIVE STRENGTH OF 4,000 PSI, 0.45 MAX W/C RATIO. CONTRACTOR TO PROVIDE MIX DESIGNS FOR APPROVAL.
3. REINFORCING STEEL SHALL BE DEFORMED BILLET STEEL BARS CONFORMING TO ASTM A615, GRADE 60. STEEL SHALL BE KEPT CLEAN AND FREE OF RUST SCALES.
4. MINIMUM REINFORCING STEEL COVER REQUIREMENTS, UNLESS NOTED ON PLANS:
   A. CAST AGAINST AND EXPOSED TO EARTH: 3"
   B. FORMED AND EXPOSED TO WEATHER: 2"
5. REINFORCING BARS SHALL BE PLACED IN AS LONG LENGTHS AS POSSIBLE. ALL REINFORCING STEEL SHALL BE "COLD BENT." MINIMUM BARS LAP SHALL BE 48 BAR DIAMETERS UNLESS NOTED OTHERWISE.
6. REINFORCING AND INSERTS SHALL BE RIGIDLY HELD IN PLACE PRIOR TO PLACING CONCRETE.
7. NON-SHRINK GROUT SHALL BE SIKA GROUT 212 OAE.
11. PROVIDE 3/4" CHAMFER ON EXPOSED EDGES.
12. CONTRACTOR SHALL CALL FOR INSPECTION BY CITY ENGINEER 24 HOURS PRIOR TO POURING ANY CONCRETE.

GENERAL NOTES:

1. ALL STEEL SHALL BE HOT DIP GALVANIZED AFTER FABRICATION.
2. CONTRACTOR SHALL PROVIDE AND INSTALL FIBERGLASS GRATES OVER CONTAINMENT TRENCHES AS SHOWN ON THIS DRAWING. FIBER-GLASS GRATING SHALL BE MADE BY IKG IN ACCORDANCE WITH CONSTRUCTION SPECIFICATIONS SECTION-FIBER GLASS GRATING.
3. SEE FOUNDATION NOTES ON 395C4-03.

SIERRA VISTA SUBSTATION

REV	BY	DATE	DESCRIPTION		APPR.
2	ML	1/23/26	TRANSFORMER CONTAINMENT PIT MODIFICATION		WLC
1	ML	7/28/25	AS BUILT – CONFIRMATION	JG	WLC
0	TR	07/23/18	AS BUILT	AA	–

CITY OF ROSEVILLE CALIFORNIA
Roseville Electric

TITLE: SUBSTATION FOUNDATION DETAILS
SHT. 3 OF 5
ENG. M. LARKIN | APPR. | SCALE AS NOTED
DR. M. GUIDOTTI | DATE 12/18/17

JOB NO. 400114
ACCOUNT NO. 6001-6875-84701
DRAWING NO. 395C4-04

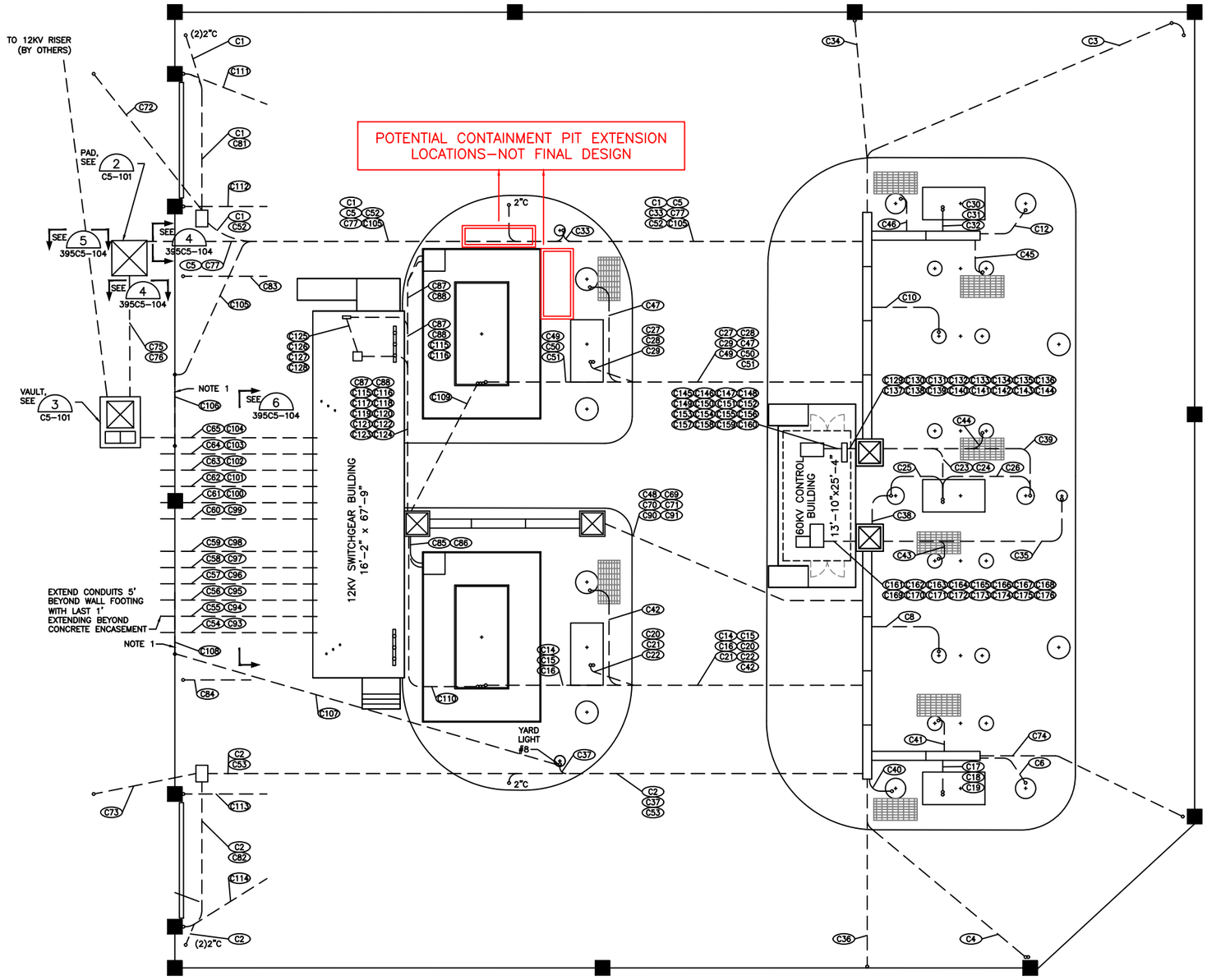

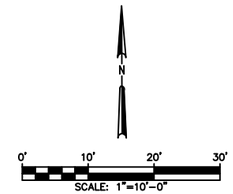

NOTES:

1. LOCATIONS OF CONDUIT ARE APPROXIMATE ONLY. THE CONTRACTOR MAY MAKE ANY NECESSARY ADJUSTMENTS TO SUIT FIELD CONDITIONS.
2. ALL BURIED CONDUIT SHALL BE PVC SCHEDULE 40 AND SHALL BE INSTALLED A MINIMUM OF 2'-0" BELOW TOP OF STONE COVER. ALL SWEEPS FROM 2'-0" BELOW GRADE TO SURFACE SHALL BE PVC SCHEDULE 80 CONDUIT. ALL ABOVE GRADE CONDUIT AND FITTINGS SHALL BE GALVANIZED STEEL RIGID CONDUIT. TRANSITION FROM PVC TO OTHER TYPES OF CONDUIT SHALL BE ACCOMPLISHED USING UL APPROVED ADAPTERS 6" ABOVE TOP OF FINISHED ROCK.
3. ALL SPARE CONDUIT SHALL BE BROUGHT UP TO 3" ABOVE TOP OF FINISHED ROCK AND TERMINATED WITH A PVC CAP, AND INCLUDE A NYLON PULLING STRING FOR FUTURE CABLE PULLING.
4. ANY CONDUITS ENTERING CABINETS, EQUIPMENT BOXES, ETC. FROM UNDERGROUND SHALL BE SEALED WITH DUCT SEAL COMPOUND AFTER THE CABLES HAVE BEEN INSTALLED.
5. THE BREAKERS AND TRANSFORMER HAVE AN OPENING IN THE BASE WITH A REMOVABLE COVER FOR CONDUIT ENTRANCE. COVER TO BE DRILLED BY CONTRACTOR.
6. PVC CONDUIT AND FITTINGS SHALL BE JOINED TOGETHER AND MADE LEAK PROOF USING FAST DRYING SOLVENT CEMENT.
7. A THREAD LUBRICANT AND SEALANT SHALL BE APPLIED TO ALL PVC AND GRS THREADED FITTINGS.
8. CONDUIT OPEN ENDS SHALL BE PLUGGED AFTER CONDUIT INSTALLATION. ALL CONDUIT SHALL BE THOROUGHLY CLEANED BEFORE CABLE PULLING BEGINS.
9. EXACT CONDUIT STUB-UP LOCATIONS SHALL BE DETERMINED BY THE GLAND PLATE ON THE EQUIPMENT, CONDUIT BOX, OR TERMINAL CABINET.
10. ALL CONDUIT STUB-UPS AT FOUNDATIONS SHALL BE STUBBED UP THROUGH THE FOUNDATION AND NOT TO THE SIDE OF THE FOUNDATION, NOR UP THE EXTERIOR OF THE FOUNDATION. CARE SHOULD BE TAKEN IN LOCATING PRECISE STUB-UP LOCATIONS THROUGH FOUNDATIONS SO THAT CONDUITS STUB-UP RIGHT BELOW THE EQUIPMENT LOCATION THEY NEED TO TRANSITION TO ABOVE GRADE.

SIERRA VISTA SUBSTATION

REV	BY	DATE	DESCRIPTION	APPR.
1	ML	7/29/25	AS BUILT - CONFIRMATION	JG
0	TR	07/26/18	AS BUILT	AA

CITY OF ROSEVILLE CALIFORNIA
Roseville Electric

TITLE: SUBSTATION CONDUIT PLAN - OVERALL
SHT. 1 OF 1
ENG. K. MATTHEWS APPR.
DR. L. BERNLOEHR
SCALE AS NOTED
DATE 12/15/17

JOB NO. 400114
ACCOUNT NO. 6001-6875-84701
DRAWING NO. 395C5-01

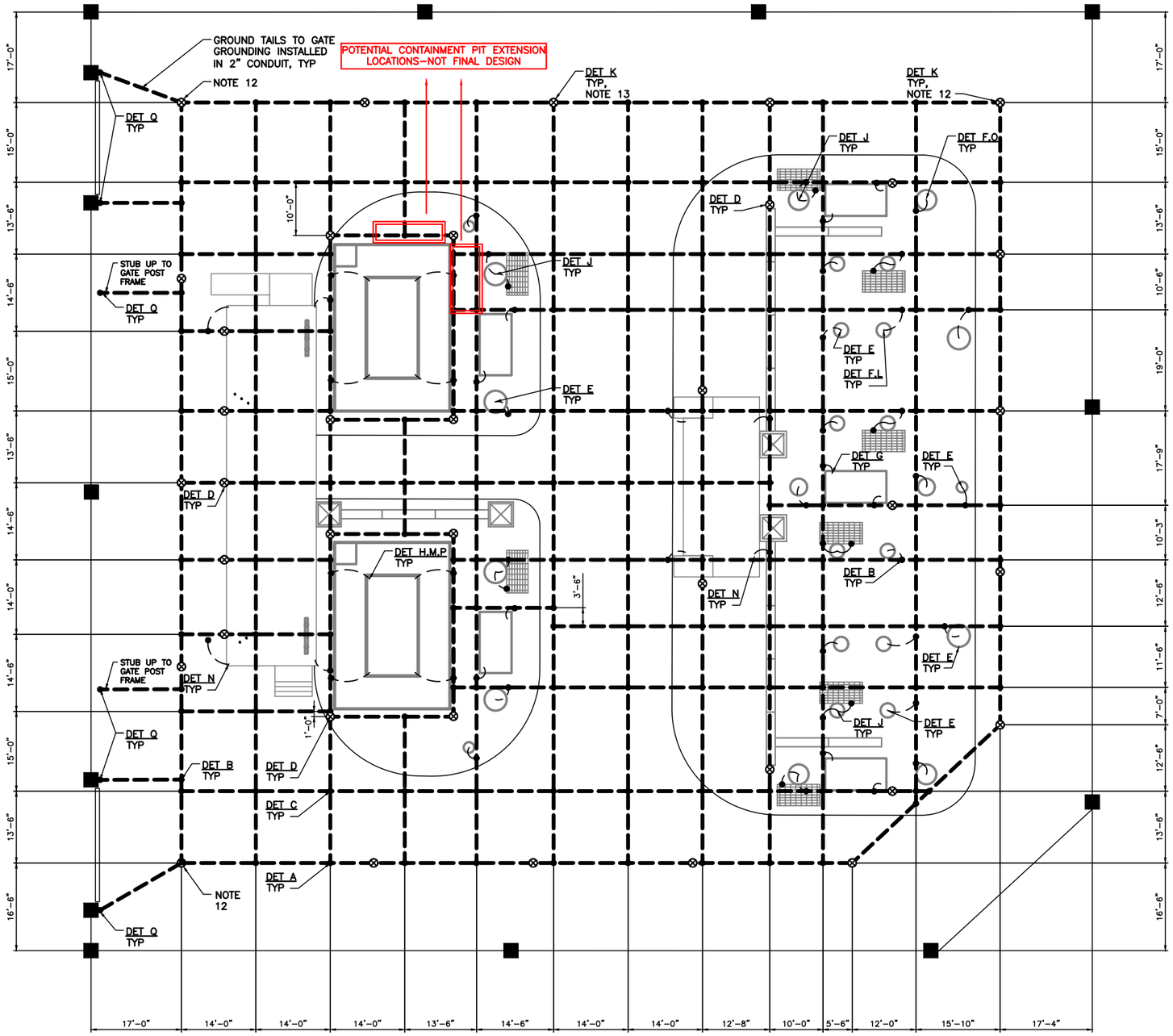

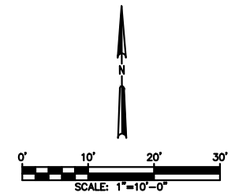

LEGEND

- EQUIPMENT OPERATOR PLATFORM 8'x4'x1"
- BARE COPPER GROUND WIRE
- GROUND CONNECTION
- COPPERWELD GROUND ROD

NOTES:

1. MAIN GROUND GRID CABLES SHALL BE 250 MCM BARE COPPER. PIGTAILS SHALL BE 500 MCM BARE COPPER. MAIN GROUND GRID CABLES SHALL BE BURIED TO A DEPTH OF 30" BELOW SUBGRADE EXCEPT AS NOTED.
2. GROUND CABLE TO BE TRAINED NEATLY OVER FOUNDATIONS.
3. CONTRACTOR TO COIL GROUND LEADS OF SUFFICIENT LENGTH ON FOUNDATIONS, AS NECESSARY PER THE GROUNDING PLAN, TO GROUND EQUIPMENT AS IDENTIFIED IN THE GROUNDING DETAILS. SPLICING PIGTAILS SHALL NOT BE PERMITTED.
4. FOR EQUIPMENT CONNECTIONS, PROVIDE PIGTAILS OF ADEQUATE LENGTH TO EXTEND TO FINAL ELEVATION OF EQUIPMENT WITHOUT SPLICING TO MAKE UP APPLICABLE DETAILS.
5. PIGTAILS AND EXPOSED GROUNDING CONDUCTOR SHALL BE PROTECTED FROM PHYSICAL DAMAGE DURING CONSTRUCTION.
6. DO NOT DRIVE GROUND RODS CLOSER THAN 18" FROM ANY FOOTING.
7. SOIL RESISTIVITY MEASURED BY FUGRO USING THE WENNER 4-PIN METHOD.
8. PROVIDE 500 MCM PIGTAIL AT FOUR CORNERS OF CONTROL HOUSE AND SWITCHGEAR BUILDING. FIELD DETERMINE TYPE AND LOCATION OF CONNECTION REQUIRED.
9. GROUNDING DIMENSIONS ARE APPROXIMATE.
10. 3000 OHM-M ROCK COVERING SHALL BE 6" DEEP, 10,000 OHM-M ASPHALT COVERING SHALL BE 6" DEEP, BOTH SURFACES SHALL BE INSTALLED AS INDICATED IN DRAWING 395C2-01. ENSURE 6" OF ASPHALT SURFACE COVERING SHALL EXTEND OUTSIDE OF YARD IN GATE AREAS WITHIN TOUCHING DISTANCE OF METALLIC SUBSTATION GATE (1 METER) BEFORE TAPERING OFF.
11. SUBSTATION METALLIC SLIDING GATES SHALL BE MOUNTED TO SLIDE OPEN ON THE INSIDE OF THE WALLS.
12. THE GROUND RODS ON THE SW, NW, AND NE CORNER OF THE GRID SHALL BE 30' IN LENGTH AND INSTALLED AT A 45 DEGREE ANGLE DIAGONALLY AWAY FROM THE GRID AND DOWNWARDS.
13. THE REMAINDER OF GROUND RODS ON THE OUTERMOST EDGE OF THE GRID SHALL BE 30' IN LENGTH (NOT INSTALLED AT AN ANGLE). ALL OTHER GROUND RODS (INTERNAL TO THE GRID) SHALL BE 10' IN LENGTH.

DESIGN CRITERIA

1. SOIL MODEL

LAYER	UPPER BOUNDARY	LOWER BOUNDARY	RESISTIVITY
1	0'-0"	1.6'	30.1 ΩM
2	1.6'	5.1'	13.6 ΩM
3	5.1'	∞	26.6 ΩM

2. CALCULATED GRID IMPEDANCE:
   2.1. ~0.21 OHMS (NO EXTERNAL GROUND CONNECTION)
3. DESIGN FAULT CURRENT: 20,000 A.
4. DESIGN CLEARING TIME: 0.95 SECONDS
5. STUDY ASSUMES NO SPLIT FACTORS, 100% OF FAULT CURRENT STATED ABOVE IS EARTH CURRENT FLOWING THROUGH GRID BACK TO REMOTE SOURCE.

SIERRA VISTA SUBSTATION

REV	BY	DATE	DESCRIPTION	JG	TITLE
1	ML	7/31/25	AS BUILT – CONFIRMATION	JG	
0	TR	07/23/18	AS BUILT	AA	–
REV	BY	DATE	DESCRIPTION		APPR.

CITY OF ROSEVILLE CALIFORNIA
Roseville Electric

SUBSTATION GROUNDING PLAN
OVERALL
SHT. 1 OF 1

TITLE		JOB NO.	400114
ENG. A. ABTS	APPR.	ACCOUNT NO.	6001-6875-84701
DR. M. GUIDOTTI	SCALE AS NOTED	DRAWING NO.	395C7-01
	DATE 12/15/17		

Notice of Exemption

To: Placer County Clerk
Recorder's Office
2954 Richardson Drive
Auburn, CA 95603

From: City of Roseville
Development Services Dept.
311 Vernon Street
Roseville, CA 95678

Project Title: Spare Substation Transformer Project

Project Location(s): Sierra Vista Substation, 1550 Westbrook Boulevard (APN 499-010-063-000) and Fiddyment Substation, 6821 Fiddyment Road (APN 478-440-004-000), Roseville, CA 95747.

Project Description: Roseville Electric is proposing to make improvements to the Sierra Vista Substation and Fiddyment Substation to support enhanced reliability of the existing power supply. The project would expand the substation transformer containment pit at Sierra Vista Substation to meet transformer oil containment requirements. At the Fiddyment Substation, the project would also add a new concrete pad to site a new spare transformer used only to support reliability of the existing power supply and would not result in an expansion of use or capacity. All proposed improvements would be sited entirely within the substation parcels.

Public Agency Approving Project: Roseville City Council

Agency/Individual Carrying Out Project: Roseville Electric Utility

Reason why this Project is Exempt: The project qualifies for a Class 1 Categorical Exemption as described in Section 15301 of the California Environmental Quality Act (CEQA) guidelines which states:

> "Class 1 consists of the…minor alteration of existing public or private structures, facilities, mechanical equipment, or topographical features, involving negligible or no expansion of existing or former use… Examples include, but are not limited to: (a) Interior or exterior alterations involving such things as interior partitions, plumbing, and electrical conveyances; [and] (b) Existing facilities of both investor and publicly owned utilities used to provide electrical power, natural gas, sewerage, or other public utility services…"

The project consists of expanding the containment pit at the Sierra Vista Substation to meet oil containment requirements and the addition of a new concrete pad and spare transformer, to the Fiddyment Substation. The project would not result in expansion of use or capacity. Consequently, the Class 1 Categorical Exemption applies.

Lead Agency Contact Person: David Angel-Jimenez, Roseville Electric (916-774-5698).

Signature: Jessica Lynch Date: 2/5/2026

Jessica Lynch, Environmental Coordinator
City of Roseville

City Council Communication

Meeting Date: 3/4/2026
Item #: VII.12
File #: 0800-03
Item ID: 2026-130

Title:	Renewable Energy Transaction Confirmation and Credit Support Addendum - Amendments
Contact:	Petra Wallace 916-774-5510 pwallace@roseville.ca.us

SUMMARY

Staff recommends approval of an amendment to the existing renewable agreement with Shell Energy North America, L.P. and to execute an updated Credit Support Annex. The contract amendment will increase the contract term by one year for a new term totaling 11.5 years, and increase the cost of the contract by $6,951,000, up to a total of $84,125,000 over the amended term of the contract. The updated Credit Support Annex with Shell Energy North America, L.P. will increase credit limits for both parties from $25,000,000 to $35,000,000, for high investment grade ratings, to reflect the higher total control authority. Funding for the cost of the amendment will be included in the Electric Department's proposed FY2026-27 budget and contingent on the City Council's approval.

RECOMMENDATION

Staff recommends that the City Council:

1. Adopt a resolution authorizing the City Manager to execute the First Amendment to Transaction Confirmation with Shell Energy North America, L.P.; and
2. Adopt a resolution authorizing the City Manager to execute the Second Amendment to WSPP Agreement Credit Support Addendum with Shell Energy North America, L.P.

BACKGROUND

The State of California's Renewable Energy Portfolio Standard (RPS) legislation requires electric utilities to increase the amount of energy they receive from renewable sources to 60% by 2030. This amendment with Shell Energy North America, L.P. is an extension of a ten-and-a-half-year purchase of renewable energy and renewable energy credits that Roseville executed in September 2024 that was scheduled to start delivering renewable energy to Roseville in 2028. This amendment moves the delivery start a year earlier to January 2027, and provides up to 100,000 mega-watt hours (MWh) of renewable energy at a fixed price of $69.51 per MWh for this first year; otherwise, the terms for the remaining previously-executed 10.5 year contract remain the same. This earlier delivery will help Roseville meet its RPS requirements for the current compliance period 5 (2025-2027).

In addition, the updated Credit Support Annex with Shell Energy North America, L.P. will increase credit limits for both parties from $25,000,000 to $35,000,000, for high investment grade ratings, to reflect the higher total control authority.

FISCAL IMPACT

The total cost of the amendment is up to $6,951,000 and will increase the total authority of the contract to $84,125,000. Funding for the cost of the amendment will be included in the Electric Department's proposed FY2026-27 budget and contingent on the City Council's approval.

ENVIRONMENTAL REVIEW

The California Environmental Quality Act (CEQA) does not apply to activities that will not result in a direct or reasonably foreseeable indirect physical change in the environment or is otherwise not considered a project as defined by CEQA Statute §21065 and CEQA State Guidelines §15060(c)(3) and §15378. Approval of this contract meets the above criteria and is not subject to CEQA. No additional environmental review is required.

CITY COUNCIL STRATEGIC PLAN/OVERARCHING GOALS

6. Deliver exceptional City services
2. Remain fiscally responsible in a changing world

Respectfully Submitted,
Petra Wallace, Power Supply and Portfolio Administrator

Daniel Beans, Electric Utility Director

ATTACHMENTS:

1. Resolution 26-047
2. First_Amendment_SENA_Roseville_Rev1.3_PE
3. Resolution 26-048
4. Second_Amendment_CSA_SENA_Roseville_Rev1_PE

REVIEWERS:

Petra Wallace, Electric Department - Resource Planning & Generation	Created/Initiated - 2/11/2026
William Forsythe, Electric Department - All	Approved - 2/13/2026
Shawn Matchim, Electric Department - All	Approved - 2/13/2026
Daniel Beans, Electric Department - All	Approved - 2/13/2026
Kelly Aye, City Attorney Department	Approved - 2/17/2026
Katrina Six, City Clerk Department	Approved - 2/18/2026
Ryan DeVore, City Manager Department - Assistant City Manager	Approved - 2/19/2026
Dennis Kauffman, City Manager Department - Assistant City Manager	Approved - 2/19/2026
Michelle Sheidenberger, City Attorney Department	Approved - 2/19/2026
Dominick Casey, City Clerk Department	Approved - 2/23/2026
Katrina Six, City Clerk Department	Final Approval - 2/23/2026

RESOLUTION NO. 26-047

APPROVING A FIRST AMENDMENT TO TRANSACTION CONFIRMATION, BY AND BETWEEN THE CITY OF ROSEVILLE AND SHELL ENERGY NORTH AMERICA (US), L.P., AND AUTHORIZING THE CITY MANAGER TO EXECUTE IT ON BEHALF OF THE CITY OF ROSEVILLE

WHEREAS, a First Amendment to Transaction Confirmation for Bundled RECs and Resource Adequacy Capacity Products, by and between the City of Roseville and Shell Energy North America (US), L.P., has been reviewed by the City Council; and

NOW, THEREFORE, BE IT RESOLVED by the Council of the City of Roseville that said first amendment is hereby approved and that the City Manager is authorized to execute it on behalf of the City of Roseville.

PASSED AND ADOPTED by the Council of the City of Roseville this ___ day of _____, 2026, by the following vote on roll call:

AYES COUNCILMEMBERS:

NOES COUNCILMEMBERS:

ABSENT COUNCILMEMBERS:

_____
MAYOR

ATTEST:

_____
City Clerk

Docusign Envelope ID: 02E00F7D-C205-4D46-95C4-4364B37CF1F6

FIRST AMENDMENT TO
TRANSACTION CONFIRMATION
Bundled RECs and
Resource Adequacy Capacity Products

THIS AMENDMENT TO TRANSACTION CONFIRMATION ("First Amendment") is made and entered into as of **March 4, 2026** (the "Effective Date"), by and between **Shell Energy North America (US), L.P.** ("Shell Energy" or "Seller") and **City of Roseville, California** ("Roseville" or "Buyer"). The parties to this Amendment are referred to herein together as the "Parties" and individually as a "Party."

Recitals:

WHEREAS, the Parties have previously entered into that certain Transaction Confirmation for Bundled RECs and Resource Adequacy Capacity Products ("Confirmation") dated September 18, 2024, governed by the terms and conditions of the WSPP Agreement, version dated effective September 11, 2023, including, without limitation, Schedule C and Schedule R, as such may have been amended, modified or restated from time to time (collectively, the "Master Agreement"); and

WHEREAS, the Parties have now agreed to amend certain provisions of the Confirmation.

NOW, THEREFORE, in consideration of the mutual covenants and agreements contained herein and other good and valuable consideration, the receipt and sufficiency of which are hereby acknowledged, the Parties hereby agree as follows:

1. **Amendment of the Confirmation.** Effective as of the Effective Date, the following provisions set forth in the Confirmation shall be and are hereby amended as follows:

(a) In the table on the first page of the Confirmation:
   i. delete "Rick Kunz" and replace with "Courtney Anderson"
   ii. delete "503.504.9505" and replace with "858.210.2682"
   iii. delete "rick.kunz@shell.com" and replace with "courtney.smith@shell.com"

(b) Delete the entire paragraph in *Contract Price*, and replace it with the following:
"The Contract Price for each MWh of Product delivered to Buyer is:
Product (a) - Firm Bundled RECs: $69.51/MWh.
Product (b) - RA Product: $3.99/MWh."

(c) Delete the entire paragraph in *Delivery Term*, and replace it with the following:
"Firm Bundled RECs – The delivery term for Product (a) under this Confirmation shall commence January 1, 2027 and continue through June 30, 2039, inclusive (the "Delivery Term") provided that the RECs attributable to the energy generated

Docusign Envelope ID: 02E00F7D-C205-4D46-95C4-4364B37CF1F6

during the Delivery Term but created after the Delivery Term shall be transferred to and paid for by Buyer in accordance with the terms of this confirmation.

"RA Product – The delivery term for Product (b) under this Confirmation shall commence January 1, 2028 and continue through June 30, 2038."

(d) Delete the table in Exhibit B – Portfolio Projects in its entirety, and replace it with the following:

No.	Name of Facility	Fuel Source	Location	CEC RPS ID	WREGIS ID
1	Sandrini Sol 2	Solar	CA	64277A	W21518
2	Maverick Solar 7, LLC	Solar	CA	64332A	W11822
3	SunZia Wind North LLC	Wind	NM	65970C	TBD
4	SunZia Wind South LLC	Wind	NM	65971C	TBD
5	Shell Portfolio Additions	Various	TBD	TBD	TBD

2. **Representations.** Each Party hereby represents and warrants to the other Party that:

(a) it has the full power and authority to execute and deliver this First Amendment and to perform all of its obligations hereunder;

(b) its obligations under the Master Agreement, as amended hereby, constitute its legal, valid and binding obligations, enforceable in accordance with its respective terms (subject to applicable bankruptcy, reorganization, insolvency, moratorium or similar laws affecting creditors' rights generally and subject, as to enforceability, to equitable principles of general application (regardless of whether enforcement is sought in a proceeding in equity or at law)); and

(c) all representations contained in the Master Agreement, as amended, are true and accurate as of the date of this First Amendment and that such representations are deemed to be given or repeated by each Party, as the case may be, on the date of this First Amendment.

3. **Miscellaneous.**

(a) ***Definitions.*** Capitalized terms used and not otherwise defined herein shall have the meanings specified in the Master Agreement.

(b) ***Entire Agreement.*** This First Amendment constitutes the entire agreement and understanding of the Parties with respect to its subject matter and supersedes all oral communication and prior writings (except as otherwise provided herein) with respect

Docusign Envelope ID: 02E00F7D-C205-4D46-95C4-4364B37CF1F6

thereto. Except as expressly set forth in this First Amendment, all other provisions of the executed Confirmation and the Master Agreement remain unchanged, in full force and effect, and shall be binding upon the Parties, their representatives, successors and assigns.

(c) ***Counterparts.*** This First Amendment may be executed in as many counterparts as are necessary and all executed counterparts together shall constitute one and the same First Amendment. The electronic transmission of a signed original counterpart of this First Amendment and transmission, or re-transmission, of an electronically-signed counterpart shall be deemed to be the same as delivery of a signed original counterpart of this First Amendment. At the request of either Party, the Parties will confirm an electronically signed or transmitted counterpart by signing an original counterpart for delivery between them by mail or courier service; provided, however, a Party's failure to so confirm such a counterpart shall not affect the validity and enforceability of this First Amendment.

(d) ***Governing Law.*** This First Amendment shall be governed by and construed in accordance with the applicable law governing the Master Agreement.

IN WITNESS WHEREOF, the Parties have executed this First Amendment on the dates specified below with effect from the Effective Date.

CITY OF ROSEVILLE	**SHELL ENERGY NORTH AMERICA (US), L.P.**
By: _____	By: DocuSigned by: Martina De Luca BE11487DD8094AA...
Name: _____	Name: Martina De Luca
Title: _____	Title: Vice President West Sales and Origination
Date: _____	Date: Feb 11, 2026

RESOLUTION NO. 26-048

APPROVING A SECOND AMENDMENT TO WSPP AGREEMENT CREDIT SUPPORT ADDENDUM, BY AND BETWEEN THE CITY OF ROSEVILLE AND SHELL ENERGY NORTH AMERICA (US), L.P., AND AUTHORIZING THE CITY MANAGER TO EXECUTE IT ON BEHALF OF THE CITY OF ROSEVILLE

WHEREAS, a Second Amendment to WSPP Agreement Credit Support Addendum to increase credit limits, by and between the City of Roseville and Shell Energy North America (US), L.P, has been reviewed by the City Council; and

NOW, THEREFORE, BE IT RESOLVED by the Council of the City of Roseville that said second amendment is hereby approved and that the City Manager is authorized to execute it on behalf of the City of Roseville.

PASSED AND ADOPTED by the Council of the City of Roseville this ___ day of _____, 2026, by the following vote on roll call:

AYES COUNCILMEMBERS:

NOES COUNCILMEMBERS:

ABSENT COUNCILMEMBERS:

_____
MAYOR

ATTEST:

_____
City Clerk

Docusign Envelope ID: 7D5FF468-0D7F-499F-95F8-5B055A605094

SECOND AMENDMENT TO
WSPP AGREEMENT CREDIT SUPPORT ADDENDUM

THIS AMENDMENT TO WSPP AGREEMENT CREDIT SUPPORT ADDENDUM ("Second Amendment") is made and entered into as of **March 3, 2026** (the "Effective Date"), by and between **Shell Energy North America (US), L.P.** ("Shell Energy" or "Seller") and **City of Roseville, California** ("Roseville" or "Buyer"). The parties to this Amendment are referred to herein together as the "Parties" and individually as a "Party."

Recitals:

WHEREAS, the Parties have previously entered into that certain WSPP Agreement Credit Support Addendum ("CSA") dated October 6, 2010, as amended by the Amendment to WSPP Agreement Credit Support Addendum ("First Amendment") dated September 18, 2024, as such may have been additionally amended, modified or restated from time to time (collectively, the "Master Agreement"); and

WHEREAS, the Parties have now agreed to amend certain provisions of the Confirmation.

NOW, THEREFORE, in consideration of the mutual covenants and agreements contained herein and other good and valuable consideration, the receipt and sufficiency of which are hereby acknowledged, the Parties hereby agree as follows:

1. **Amendment of the Confirmation.** Effective as of the Effective Date, the following provisions set forth in the Master Agreement shall be and are hereby amended as follows:

(a) In Section (A)(a) Security Threshold,

i. Under *Section (y)*, delete the Party or **Credit Support Provider's Credit Rating** table in its entirety and replace it with the following:

Party or Credit Support Provider's Credit Rating		
S&P Credit Rating	**Moody's Credit Rating**	**Threshold Amount**
A- or above	A3 or above	$35,000,000
BBB+	Baa1	$30,000,000
BBB	Baa2	$25,000,000
BBB-	Baa3	$20,000,000
BB+	Ba1	$15,000,000
BB	Ba2	$10,000,000
BB-	Ba3	$5,000,000
Below BB-	Below Ba3	$0

2. **Representations.** Each Party hereby represents and warrants to the other Party that:

Docusign Envelope ID: 7D5FF468-0D7F-499F-95F8-5B055A605094

(a) it has the full power and authority to execute and deliver this Second Amendment and to perform all of its obligations hereunder;

(b) its obligations under the Master Agreement, as amended hereby, constitute its legal, valid and binding obligations, enforceable in accordance with its respective terms (subject to applicable bankruptcy, reorganization, insolvency, moratorium or similar laws affecting creditors' rights generally and subject, as to enforceability, to equitable principles of general application (regardless of whether enforcement is sought in a proceeding in equity or at law)); and

(c) all representations contained in the Master Agreement, as amended, are true and accurate as of the date of this Second Amendment and that such representations are deemed to be given or repeated by each Party, as the case may be, on the date of this Second Amendment.

3. **Miscellaneous.**

(a) ***Definitions.*** Capitalized terms used and not otherwise defined herein shall have the meanings specified in the Master Agreement.

(b) ***Entire Agreement.*** This Second Amendment constitutes the entire agreement and understanding of the Parties with respect to its subject matter and supersedes all oral communication and prior writings (except as otherwise provided herein) with respect thereto. Except as expressly set forth in this Second Amendment, all other provisions of the Master Agreement remain unchanged, in full force and effect, and shall be binding upon the Parties, their representatives, successors and assigns.

(c) ***Counterparts.*** This Second Amendment may be executed in as many counterparts as are necessary and all executed counterparts together shall constitute one and the same Second Amendment. The electronic transmission of a signed original counterpart of this Second Amendment and transmission, or re-transmission, of an electronically-signed counterpart shall be deemed to be the same as delivery of a signed original counterpart of this Second Amendment. At the request of either Party, the Parties will confirm an electronically signed or transmitted counterpart by signing an original counterpart for delivery between them by mail or courier service; provided, however, a Party's failure to so confirm such a counterpart shall not affect the validity and enforceability of this Second Amendment.

(d) ***Governing Law.*** This Second Amendment shall be governed by and construed in accordance with the applicable law governing the Master Agreement.

IN WITNESS WHEREOF, the Parties have executed this Second Amendment on the dates specified below with effect from the Effective Date.

Docusign Envelope ID: 7D5FF468-0D7F-499F-95F8-5B055A605094

CITY OF ROSEVILLE	**SHELL ENERGY NORTH AMERICA (US), L.P.**
By: _____	By: DocuSigned by: Martina De Luca BE11487DD8094AA...
Name: _____	Name: Martina De Luca
Title: _____	Title: Vice President West Sales and Origination
Date: _____	Date: Feb 11, 2026

City Council Communication

Meeting Date: 3/4/2026
Item #: VII.13
File #: 0800-03
Item ID: 2026-133

Title:	Main Gas Supplier - Agreement Confirmation
Contact:	Petra Wallace 916-774-5510 pwallace@roseville.ca.us

SUMMARY

Staff recommends approval of a three-year main gas supplier agreement with ConocoPhillips Company to provide natural gas balancing services to the City. The agreement supports the Electric Department's operation of its natural gas generating facilities by scheduling the daily natural gas deliveries for planned electricity production. The annual cost of the agreement is estimated to be approximately $30,000. Funding is included in the Electric Department's FY2025-26 budget in the Electric Fund.

RECOMMENDATION

Staff recommends that the City Council adopt a resolution authorizing the City Manager to execute a Main Gas Supplier Agreement Confirmation with ConocoPhillips Company (Conoco), effective June 1, 2026 through May 31, 2029. Staff further requests that the City Manager or his designee be authorized to execute up to two (2) additional one (1) year renewals without further City Council approval, provided that the applicable budget is approved by the City Council each year, or until City staff determines that continuing with the same vendor is not in the City's best interest.

BACKGROUND

To operate the Roseville Energy Park and Roseville's peaking power plants, the City purchases more than $25 million in natural gas annually. This gas is transported through the Pacific Gas and Electric (PG&E) pipeline system, which imposes operational balancing requirements that can result in significant penalties if scheduled volumes differ from actual daily usage. To mitigate this risk, smaller gas purchasers like the City participate in a supplier pool by executing a Main Gas Supplier Agreement with a large, experienced gas trading company. These companies provide greater operational flexibility, scheduling expertise, market access, and risk protection than the City could achieve independently.

Under the Agreement, the Main Gas Supplier manages Roseville's natural gas supply by purchasing or selling gas based on operational needs and oversees the transportation and balancing of gas deliveries through the PG&E pipeline system. The Agreement establishes the terms and conditions under which Conoco will provide natural gas delivery and balancing services for the Roseville Energy Park, RPEAK, and the Sunset Energy Center (formerly Roseville Power Plant 2). All transactions will be executed pursuant to Roseville's Energy Trading Authority Policy.

In December 2025, staff issued a Request for Proposals and received responses from seven qualified firms. Conoco's proposal received the highest overall ranking based on the City's evaluation criteria.

The proposed Agreement will be effective June 1, 2026, and may extend for up to five years, through May 31, 2031, including optional extensions. The Agreement includes a 120-day termination provision. This Agreement replaces the current Main Gas Supplier Agreement with Shell Energy North America L.P.,

authorized under City Council Resolution 24-197, which expires on May 31, 2026.

FISCAL IMPACT

The annual cost of the Agreement is estimated to be approximately $30,000. Funding is included in the Electric Department's FY 2025-26 budget in the Electric Fund. Future funding is contingent on the City Council's approval of the respective annual budgets.

ENVIRONMENTAL REVIEW

The California Environmental Quality Act (CEQA) does not apply to activities that will not result in a direct or reasonably foreseeable indirect physical change in the environment or is otherwise not considered a project as defined by CEQA Statute §21065 and CEQA State Guidelines §15060(c)(3) and §15378. Approval of this amendment meets the above criteria and is not subject to CEQA. No additional environmental review is required.

CITY COUNCIL STRATEGIC PLAN/OVERARCHING GOALS

2. Remain fiscally responsible in a changing world
6. Deliver exceptional City services

Respectfully Submitted,
Petra Wallace, Power Supply and Portfolio Administrator

Daniel Beans, Electric Utility Director

ATTACHMENTS:

1. Resolution 26-043
2. Agreement Confirmation

REVIEWERS:

Petra Wallace, Electric Department - Resource Planning & Generation	Created/Initiated - 2/11/2026
William Forsythe, Electric Department - All	Approved - 2/11/2026
Shawn Matchim, Electric Department - All	Approved - 2/13/2026
Daniel Beans, Electric Department - All	Approved - 2/13/2026
Kelly Aye, City Attorney Department	Approved - 2/17/2026
Katrina Six, City Clerk Department	Approved - 2/18/2026
Ryan DeVore, City Manager Department - Assistant City Manager	Approved - 2/19/2026
Dennis Kauffman, City Manager Department - Assistant City Manager	Approved - 2/19/2026
Michelle Sheidenberger, City Attorney Department	Approved - 2/19/2026
Dominick Casey, City Manager Department - City Manager	Approved - 2/19/2026
Katrina Six, City Clerk Department	Final Approval - 2/19/2026

RESOLUTION NO. 26-043

APPROVING A MAIN GAS SUPPLIER AGREEMENT CONFIRMATION, BY AND BETWEEN THE CITY OF ROSEVILLE AND CONOCOPHILLIPS COMPANY, AND AUTHORIZING THE CITY MANAGER TO EXECUTE IT ON BEHALF OF THE CITY OF ROSEVILLE

WHEREAS, the Main Gas Supplier Agreement Confirmation for the sale and purchase of natural gas, by and between the City of Roseville and ConocoPhillips Company, has been reviewed by the City Council; and

NOW, THEREFORE, BE IT RESOLVED by the Council of the City of Roseville that said Contract is hereby approved and that the City Manager is authorized to execute it on behalf of the City of Roseville.

BE IT FURTHER RESOLVED that the City Manager or his designee is authorized to execute two (2) additional one (1) year renewals without further City Council approval, provided that the applicable budget is approved by the City Council each year, or until City staff determines that continuing with the same vendor is not in the City's best interest.

PASSED AND ADOPTED by the Council of the City of Roseville this ___ day of _____, 2026, by the following vote on roll call:

AYES COUNCILMEMBERS:

NOES COUNCILMEMBERS:

ABSENT COUNCILMEMBERS:

_____
MAYOR

ATTEST:

_____
City Clerk

ConocoPhillips

Date: February 12, 2026

Transaction Confirmation #: 5095847

This Transaction Confirmation between Seller and Buyer, (the "**Confirmation**") is governed by the terms and conditions set forth in the 1992 ISDA Master Agreement (including the Schedule thereto, the Credit Support Annex, and the ISDA North American Gas Annex, dated as of November 24, 2009, (collectively, the "**Base Contract**") , except as such provisions are expressly modified herein. If any inconsistency exists between the provisions of the Base Contract and the terms specified in this Confirmation, then this Confirmation will prevail. The terms of this Confirmation will be binding upon execution of this Confirmation by both parties.

SELLER:

ConocoPhillips Company
16930 Park Row Drive (77084)
P.O. Box 2197, Spirit 1-20th Floor
Houston, TX 77252-2197

Attn: Contract Administration - Gas & Power
Phone: (281) 293-3196
Fax: (281) 293-6303
Email: PhyGasC@cop.com
Base Contract No. _____22254_____
Transporter: _Pacific Gas and Electric ("**PG&E**")
Transporter Contract Number: _____

BUYER:

City of Roseville
311 Vernon Street
Roseville, CA 95678

Attn: _Power Supply Manager (or Settlements)_____
Phone: _(916) 774-5658_____
Email: powersupply@roseville.ca.us_____
Base Contract No.
Transporter: __Pacific Gas and Electric ("**PG&E**")
Transporter Contract Number: _____

Definitions:

In addition to the terms defined in the Base Contract, the terms set forth below shall have the meaning ascribed to them below.

"**Contract Index**" means the price published by *S&P Global Platts Gas Daily* for the applicable Gas Day under the headings "Final Daily Price Survey – Platts Locations ($/MMBtu)", Southwest, PG&E CityGate.

"**Daily Estimation Deadline**" means **6:30 am PPT** on the Business Day that Platts Gas Daily collects pricing data to determine the midpoint price for the flow date(s).

"**Daily Nominated Quantity**" means, for each Day, the forecasted Daily Usage.

"**Daily Nomination Deadline**" means **7:00 am PPT** on the Business Day that *Platts Gas Daily* collects pricing data to determine the midpoint price for the flow date(s).

"**Daily Usage**" means the Facilities' actual Gas usage, as metered by Transporter for each Day.

"**Facilities**" means Buyer's power generation facilities: Roseville Energy Park (Transportation ID: 7080034), Sunset Energy Center (previously known as Roseville Power Plant 2)(Transportation ID: 7090091), and RPEAK (Roseville Peakers)(Transportation ID: 7080034)

"**Involuntary Diversion and Local Curtailment**" means the mechanisms used by Transporter if deliveries to core customers, as classified by Transporter, are threatened due to supply and/or capacity shortages.

Operational Flow Order ("**OFO**"), **Emergency Flow Order** ("**EFO**"), **or Curtailment of Standby Procurement Services** ("**CSPS**") means the mechanisms used by PG&E to protect the operational integrity of the pipeline by requiring Scheduled Gas and Daily Usage to be within a specified daily tolerance.

"**PPT**" means standard time or daylight savings time, as applicable to the Pacific Time Zone.

Delivery Period: Begin: June 1, 2026 End: May 31, 2029

Thereafter, the Delivery Period may be extended for up to two (2) successive one (1) year terms upon mutual written agreement of Seller and Buyer no later than six (6) Months prior to the expiration of the then current Delivery Period.

Either Buyer or Seller may terminate at any time, if at least six (6) Months' written notice is provided to the other party, with such termination being effective as of the last day of the Month of the applicable Delivery Period.

Performance Obligation and Contract Quantity: On a Firm basis, Seller agrees to deliver and sell, and Buyer agrees to receive and purchase, one hundred percent (100%) of Buyer's Gas requirements for the Facilities, as metered by Transporter, *less* any Gas supply contracted by Buyer outside of this Confirmation ("**Buyer Self-Supply**").

Delivery Point(s): PG&E Citygate

Contract Price:

1. Daily Quantity Price: The "**Daily Quantity**" means, for each Day, the sum of the Buyer Self-Supply *minus* the Daily Nominated Quantity, each as provided by Buyer by the Daily Nomination Deadline. When the Daily Quantity is negative, Buyer will purchase such quantity from Seller at the Contract Index Midpoint *minus* $0.01 per MMBtu, and when the Daily Quantity is positive, Buyer will sell such quantity to Seller at the Contract Index Midpoint *minus* $0.01 per MMBtu; provided that Buyer and Seller may mutually agree upon a fixed price alternative price prior to the Daily Nomination Deadline for next Day or balance of the Month. The Daily Quantity shall be constant for all flow Days subject to a single Platts Gas Daily Midpoint price.

2. Late/Intraday/Non-Ratable Price: The "**Late/Intraday/Non-Ratable Quantity**" is that quantity nominated after the Daily Nomination Deadline or that quantity elected that is not constant for all flow Days subject to a single Platts Gas Daily Midpoint price. The Late/Intraday/Non-Ratable Quantity Price will be determined promptly following notification of the Late/Intraday/Non-Ratable Quantity election.

3. Negotiated Price: Buyer may request Seller to provide a price (which may be (i) index based, (ii) a Fixed Price, or (iii) a fixed basis) for a portion of its estimated consumption for a term equal to or less than the Delivery Period. If Buyer accepts the price quoted by Seller, or the parties agree on any other price, the agreement to such price, and the quantity and term will be confirmed pursuant to the Base Contract, and the performance obligations of the parties thereunder shall be Firm.

4. Daily Imbalance Price: The "**Daily Imbalance Quantity**" for each Day is the positive or negative sum of the Daily Nominated Quantity for such Day *minus* the Daily Usage for that same Day. The Daily Imbalance Quantity will be priced, per MMBtu, as follows:

   (a) Positive Daily Imbalance Quantity (Daily Nominated Quantity greater than Daily Usage)

      (i) Each Day, that portion of the positive Daily Imbalance Quantity to be priced at the Contract Index Midpoint *minus* $0.01 per MMBtu will be the more restrictive of: (1) five (5%) percent of the Daily Usage: or, (2) the percent tolerance specified by Transporter due to a high OFO, if applicable, of the Daily Usage.

      (ii) Each Day, that portion of the positive Daily Imbalance Quantity that exceeds the applicable tolerance determined in accordance with paragraph 4(a)(i), if any, will be priced at the lower of: (1) the Contract Index Common low for the Day the imbalance was incurred or (2) the next posted Contract Index Common low for the Trade Date following the Day the imbalance was incurred. "**Trade Date**" will have the meaning as ascribed by Platts Gas Daily.

   (b) Negative Daily Imbalance Quantity (Daily Nominated Quantity less than Daily Usage)

      (i) Each Day, that portion of the negative Daily Imbalance Quantity to be priced at the Contract Index Midpoint will be the more restrictive of: (1) negative five (5%) percent of the Daily Usage: or, (2) the percent tolerance specified by Transporter due to a low OFO, if applicable, of the Daily Usage.

      (ii) Each Day, that portion of the negative Daily Imbalance Quantity that exceeds the applicable tolerance determined in accordance with paragraph 4(b)(i), if any, will be priced at the higher of: (1) the Contract Index Common high for the Day the imbalance was incurred or (2) the next posted Contract Index Common high for the Trade Date following the Day the imbalance was incurred.

5. Metered Volume Adjustment Price: The "**Metered Volume Adjustment**" is that quantity which results from Transporter revising the Daily Usage after the eleventh (11th) Business Day following the Month of delivery. The Metered Volume Adjustment quantity is determined by *subtracting* the revised Daily Usage from the original Daily Usage. Notwithstanding anything in the Base

Contract to the contrary, any Metered Volume Adjustment will be subject to Transporter's time period limitations per Transporter's Tariff. The Metered Volume Adjustment will be priced, on a MMBtu basis, at NGI's Bidweek Survey, Spot Gas Prices for PG&E Citygate (avg) under the designation California for the Month following the Month Seller receives notification of the revision to the Daily Usage via Transporter's transportation invoice(s) and the imbalance statement(s).

Special Conditions:

1. **Scheduling, Notifications, and Reporting**:

   (a) Seller will schedule the Buyer Self-Supply from the Delivery Point to the Facilities on behalf of Buyer.

   (b) Buyer shall provide Seller, on or before the Daily Estimation Deadline, an estimate of the Daily Nominated Quantity and Buyer Self-Supply, in MMBtu. Buyer may revise and shall finalize such estimate at any time up to the Daily Nomination Deadline. After the Daily Nomination Deadline, Buyer will notify Seller of any material changes to the Daily Nominated Quantity as soon as practicable via email to COPCalifornia@cop.com.

   (c) Buyer will inform Seller of any operational issues and planned outages that may have a material impact on the Daily Nominated Quantity. Each planned outage will be communicated to Seller no later than seven (7) Business Days prior to the beginning of the Month of such planned outage. Each operational issue will be communicated to Seller as soon as practicable.

   (d) If Buyer or Seller receives notice from Transporter of an Involuntary Diversion or Local Curtailment of Gas, then it will immediately communicate such notice to the other party to this Confirmation. Seller shall bear no responsibility for any costs and penalties associated with an Involuntary Diversion or Local Curtailment by Transporter.

2. **Balancing and Penalties**:

   (a) Buyer has appointed Seller to act as Buyer's "**Nominating Marketer**" and "**Balancing Agent**" (each as defined by Transporter) for nominations and balancing of Gas to be delivered to Buyer's Facility under the terms of this Confirmation. As such, Seller assumes the risk for imbalances and penalties including penalties resulting from an OFO and/or EFO so long as Buyer communicates usage accurately and within the nomination deadline. Should penalties be assessed by Transporter because of Buyer's failure to provide such timely and/or accurate information, Buyer will fully reimburse Seller for all such penalties.

   (b) If Transporter invokes an OFO and/or EFO, then Seller shall provide Buyer timely notice of the applicable OFO and/or EFO affecting Buyer's Facility, and Buyer will provide timely notification to Seller of any nomination changes necessary to comply with the balancing tolerance prescribed by Transporter. Buyer and Seller will document notification of any OFO and/or EFO and corresponding nomination changes via email. Should Seller fail to either provide Gas supply and/or make the nomination changes requested by Buyer, Seller will be responsible for resulting penalties assessed by Transporter. However, if Buyer fails to provide timely notification of changes required or if requested changes result in non-compliance, Buyer will be responsible for resulting penalties assessed by Transporter and reimburse Seller.

   (c) Seller will waive up to twenty-five thousand dollars ($25,000) of OFO, EFO or CSPS penalties incurred because of the action or inaction of Buyer during each successive twelve-Month (12) period of the Delivery Period.

3. **Billing:** All Gas sold under this Confirmation will be billed on an as-used basis as metered by Transporter. Seller will invoice Buyer each Month for the Monthly Payment Obligation of the preceding Month. The applicable fee(s) and charge(s) to be paid by Buyer in connection with Buyer's Facility will be detailed in a support spreadsheet provided by Seller to Buyer each Month.

4. **Involuntary Diversion & Local Curtailments**: If either Seller or Buyer receives notice from Transporter of an Involuntary Diversion or Local Curtailment that affects Gas deliveries to Buyer's Facility in accordance with the terms of this Confirmation, then it will immediately notify the other party to this Confirmation of such notice. Seller shall bear no responsibility for any costs associated with an Involuntary Diversion or Local Curtailment.

5. **Intrastate Transportation:** Seller will deliver the Gas pursuant to Buyer's gas transportation service agreement with Transporter (the "**PG&E Gas Transportation Agreement**"). Seller shall not be liable for any curtailments under such PG&E Gas Transportation Agreement. Buyer is responsible for all PG&E Gas Transportation Agreement costs from the Delivery Point to Buyer's Facility.

6. **No Modification of Rights Under Base Contract**: This Confirmation does not constitute an amendment, waiver or modification of the Base Contract and neither party waives any rights it may have under the Base Contract, including but not limited to, any rights related to any pricing or balancing disputes, except as expressly provided in the Confirmation.

7. **Utility User's Tax**: Unless stated otherwise herein, to the extent required and/or permissible, including allowable pre-payment, under the applicable statute, ordinance, or other applicable law, Buyer will directly self-remit to the appropriate taxing authority any Utility User's Tax ("**UUT**") related to the Gas purchase under this Confirmation. It is Buyer's responsibility to determine if it is required or allowed to self-remit the UUT and to notify Seller of any changes that would prevent Buyer from self-remitting the UUT. If payment of the UUT by Buyer is not permissible, Seller will collect the UUT from Buyer and remit to the appropriate taxing authority. Any late fees or penalties assessed by the taxing authority will be Buyer's sole responsibility and Buyer will reimburse Seller if Seller incurs any such late fees or penalties unless such late fees and penalties are attributable to Seller, in which case Seller shall be responsible for such late fees and penalties.

   At the date of this Confirmation, Buyer does not require Seller to collect and remit UUT.

8. **Regulatory Change:** If any law or regulation affecting the economic interests of a party to this Confirmation changes so as to substantially change the benefits of this transaction to such party ("**Affected Party**"), Buyer and Seller shall use commercially reasonable endeavors to negotiate provisions within sixty (60) Days of the effective date of such change in law or regulation so as to restore the original economic value of Buyer's and Seller's obligations hereunder. If an agreement cannot be reached between the parties on replacement provisions within such sixty (60) Day period, the Affected Party will have the right to terminate this Confirmation with at least sixty (60) Days' Notice given within one hundred and twenty (120) Days after the effective date of the change in law or regulation. Upon an early termination due to a regulatory change, the affected transaction will be subject to the liquidation and other applicable provisions of Section 6 of the Base Contract, with the non-Affected Party acting as the Non-Defaulting Party.

ConocoPhillips Company (SELLER)	**City of Roseville (BUYER)**
Signed by: Jennifer Vaughn 80C69A7A9EBA433...	
By:	By:
Name: Jennifer Vaughn	Name:
Title: Manager, West	Title:
Date: February 12, 2026	Date:

Initial SQA

City Council Communication

Meeting Date: 3/4/2026
Item #: VII.14
File #: 0704-01-01
Item ID: 2026-120

Title:	JM-51 Park Project - Approve Plans and Specifications and Authorize Staff to Call for Bids
Contact:	Joel De Jong 916-774-5924 jdejong@roseville.ca.us

SUMMARY

Staff recommends City Council approval of the plans and specifications for the JM-51 Park Project and authorize staff to call for bids. The project scope includes grading and utilities, a playground, shaded picnic area, walking paths, turf area, planting and irrigation. The project is estimated to cost $715,000 for the base bid and will be funded by the JM-51 Neighborhood Park project budget in the Neighborhood Park - Sierra Vista Fund.

RECOMMENDATION

Staff recommends that the City Council:

1. Approve the plans and specifications for the JM-51 Park Project; and
2. Authorize staff to call for bids.

BACKGROUND

JM-51 Park is a 2.6-acre neighborhood park is located at Shimmer Falls Drive and Lakehaven Drive in Sierra Vista. This park backs up to an open space area. The master plan for this park was approved by the City Council on June 18, 2025. Amenities planned for the park include a playground, shaded picnic area, walking paths, turf area, planting and irrigation. Additive alternates have been identified for budget purposes to allow for “menu style” bidding, and include a half-court basketball court, additional turf and irrigation, sod in lieu of seeded turf, and additional concrete pathways. Bids are scheduled to be opened later in March 2026. Staff plans to return to Council in May to seek approval to award the project.

The architect’s estimate for construction for the base bid is $715,000.

FISCAL IMPACT

Funding for construction of this park was included in the FY2025-26 capital improvement project (CIP) budget in the JM-51 Neighborhood Park project in the Neighborhood Park - Sierra Vista Fund. Maintenance costs will be approximately $16,000/acre/year and will be funded by the Sierra Vista Community Facilities District No. 2 (Public Services). There will be no General Fund impact.

ENVIRONMENTAL REVIEW

Development of the JM-51 Neighborhood Park master plan was previously evaluated in the Sierra Vista Specific Plan EIR (certified May 5, 2010, SCH No. 2008032115) and identified in the associated Sierra Vista Specific Plan. As proposed, construction of the JM-51 Park is within the scope of the project covered by the SVSP Final EIR. As discussed in the Specific Plan EIR, the EIR provides environmental analyses of community infrastructure and facilities, including parks, pedestrian bridges, and bike trails, to the extent applicable. Because the project is consistent with the SVSP Final EIR and Specific Plan, no new effects would be expected to occur and all applicable mitigation measures from the SVSP EIR will be

implemented during the design and construction of the JM-51 Park. The proposed project meets the requirements identified in Section 15183 of the State CEQA Guidelines, therefore, no additional CEQA review is required.

CITY COUNCIL STRATEGIC PLAN/OVERARCHING GOALS

1. Ensure a safe and healthy community
2. Remain fiscally responsible in a changing world
4. Invest in well-planned infrastructure and growth
6. Deliver exceptional City services

Respectfully Submitted,
Joel De Jong, Park Development Project Manager

Jill Geller, Parks Recreation and Libraries Director

ATTACHMENTS:

1. Vicinity Map
2. Project Manual
3. Plans

REVIEWERS:

Joel De Jong, Parks, Recreation, and Libraries Department - Park Development	Created/Initiated - 2/10/2026
Tara Gee, Parks, Recreation, and Libraries Department - Park Development	Approved - 2/11/2026
Jill Geller, Parks, Recreation, and Libraries - All	Approved - 2/13/2026
Kelly Aye, City Attorney Department	Approved - 2/17/2026
Katrina Six, City Clerk Department	Approved - 2/17/2026
Ryan DeVore, City Manager Department - Assistant City Manager	Approved - 2/17/2026
Dennis Kauffman, City Manager Department - Assistant City Manager	Approved - 2/17/2026
Michelle Sheidenberger, City Attorney Department	Approved - 2/18/2026
Dominick Casey, City Manager Department - City Manager	Approved - 2/18/2026
Katrina Six, City Clerk Department	Final Approval - 2/19/2026

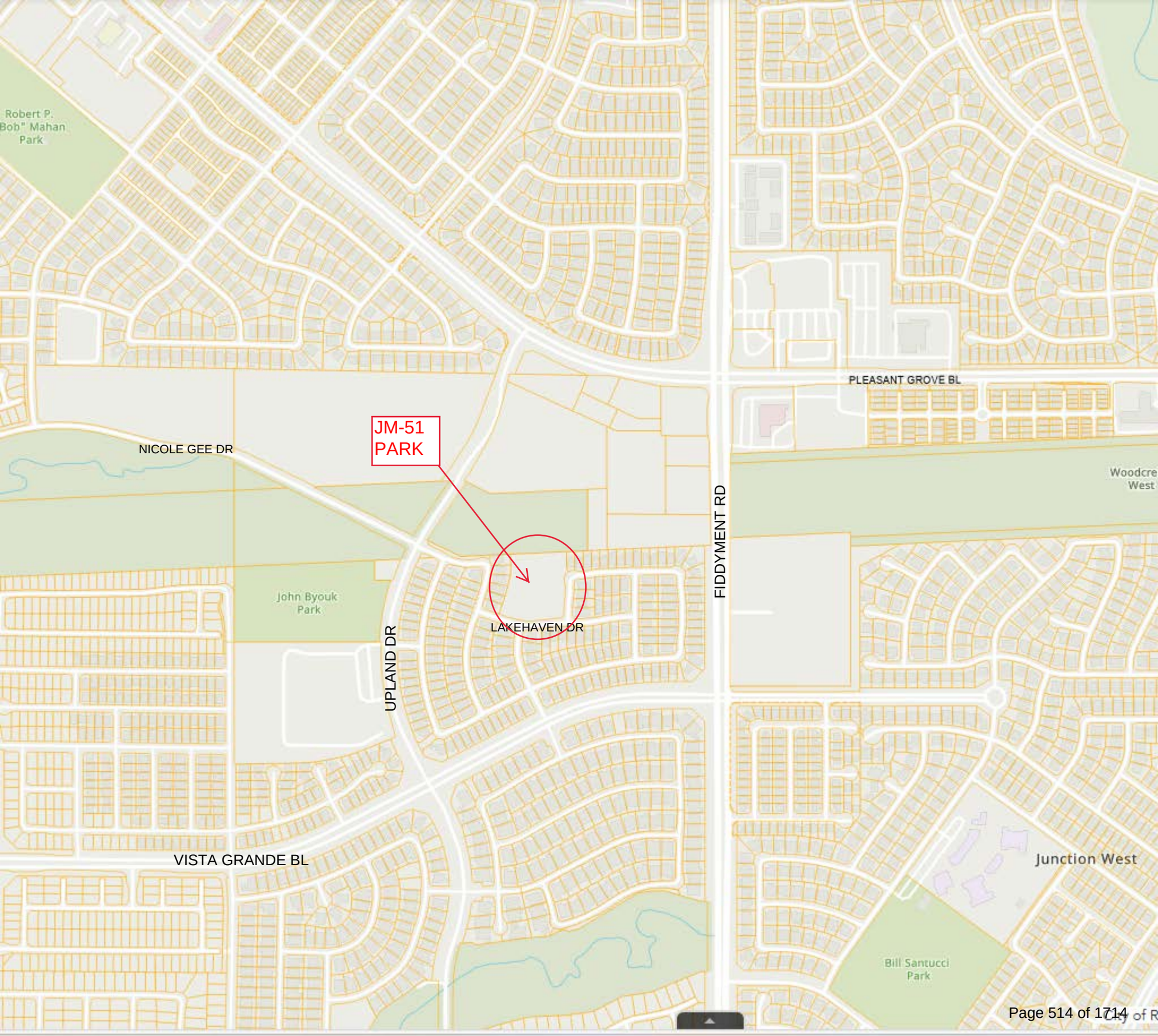
Robert P. "Bob" Mahan Park
PLEASANT GROVE BL
JM-51 PARK
NICOLE GEE DR
FIDDYMENT RD
Woodcre West
John Byouk Park
LAKEHAVEN DR
UPLAND DR
VISTA GRANDE BL
Junction West
Bill Santucci Park



Project Manual for the

JM-51 Park Project

FOR COUNCIL APPROVAL ONLY

March 2026

The latest edition of the City of Roseville Parks Construction Standards are incorporated by reference as a part of this Project Manual. The Parks Construction Standards can be purchased at the address listed below.

Parks, Recreation & Libraries
316 Vernon Street, Suite 400
Roseville, California 95678
www.roseville.ca.us

CITY OF ROSEVILLE CALIFORNIA

Parks, Recreation & Libraries
Park Development
316 Vernon Street, Suite 400
Roseville, California 95678

Notice to Bidders

DATE: March 5, 2026

TO: Prospective Bidders

FROM: Joel De Jong, Park Development Project Manager

RE: JM-51 Park Project

Project Description: The City of Roseville is now accepting bid proposals for the JM-51 Park Project from **pre-qualified** Prime Contractors. The scope of work for the base bid includes, but is not limited to, grading and utilities, a playground, shaded picnic area, walking paths, turf area, planting and irrigation. Additive alternates include a half-court basketball court, additional turf and irrigation, sod in lieu of seeded turf, and additional concrete pathways.

Prime Contractors: At this time, this project is only available for bidding by Prime Contractors listed on the City of Roseville Parks, Recreation and Libraries 2026 Pre-Qualified Contractor List. Please see attached Pre-Qualified Prime Contractors memo for more information.

Subcontractors: The City reserves the right to conduct a post-bid qualifications review of any subcontractors if deemed necessary.

Contract Documents: A Project Manual, including all Contract Documents and the Proposal forms for bidding this project, may be obtained online from the City of Roseville's website at www.roseville.ca.us/business/procurement_services/bids_rfps. Potential bidders are advised to obtain all documents and specifications related to this project directly from the City of Roseville / Public Purchase. The City of Roseville does not guarantee the accuracy of any forms, plans, or project manuals obtained through outside sources other than the City of Roseville. Furthermore, the City does not guarantee the distribution of any addendums or the accuracy of their content if obtained from a third party.

Engineer's Estimate: The engineer's estimate for construction of the base bid items is $715,000.

Questions: The deadline for submission of questions and clarifications regarding the Contract Documents is Monday, March 16, 2026 at 5:00 p.m. In order to meet the required timeline to issue addenda, questions will not be accepted after this date. Only Addenda issued by the City are binding. All questions shall be directed to the attention of Joel De Jong either via e-mail at jdejong@roseville.ca.us, or Public Purchase at https://roseville.ca.us/rfp.

Pre-Bid Conference: There is NO pre-bid conference for this project.

Bid Deadline: Proposals will be received at the Office of the City Clerk, 311 Vernon Street, Roseville, California, until 3:00 p.m. on Monday, March 23, 2026. The proposals will be publicly opened and read by the City Clerk or designee of the City of Roseville in the City Clerk's Office at 3:05 p.m. on that same day.

The July 2025 edition of the City of Roseville Parks Construction Standards will be applicable to this project. The successful bidder will be required to use the standards contained in the book for the construction of this project.

FOR COUNCIL APPROVAL ONLY

Parks, Recreation & Libraries
Park Development
316 Vernon Street, Suite 400
Roseville CA 95678

To the successful bidder:

In order to move forward with the award of this project, the City of Roseville requests that you submit the following documents:

1. Please return two, original signed agreements OR a PDF of original signatures if unable to get originals. Corporations require two corporate signatures –OR- one corporate signature and a corporate seal. For a listing of accepted signatures, please see below *.

   * In accordance with Section 313 of the California Corporations Code, any document executed by a corporation requires the signature from at least one person from EACH of the following two groups:

GROUP ONE	GROUP TWO
Chairman of the Board	Secretary
President	Assistant Secretary
Vice President	Chief Financial Officer
	Assistant Treasurer

   If an officer holds a title in each of the above groups (dual title), that officer may sign for each of the two groups by two separate signatures with the appropriate title listed with his or her signature.

   There are also two exceptions whereby we would accept only one signature:
   - One corporate signature AND a corporate seal
     -OR-
   - They are able to provide a current resolution from their Board of Directors, stating that a particular person has the sole authority to bind the corporation.

2. Public Works Faithful Performance Bond – fully executed and notarized.

3. Public Works Labor and Materials Payment Bond – fully executed and notarized.

4. Insurance - fully executed and notarized.

We request that all documents be received by April 3, 2026.

The Parks, Recreation & Libraries Department requires submittal of all of the above executed documents prior to City Council bid award.

FOR COUNCIL APPROVAL ONLY

916.774.5505 phone
916.774.5251 fax
www.roseville.ca.us

TABLE OF CONTENTS

	Pagination Notation
Notice to Contractors	NTC
Instructions to Bidders	INT
Proposal	PROP
Insurance Broker Information Packet	INS
General Conditions for Buildings and Grounds	GC
Supplemental Conditions	SC
Specifications	SPEC
Drawings	DRAW
Assembly Bill No. 626	AB 626

FOR COUNCIL APPROVAL ONLY

CITY OF ROSEVILLE

DEPARTMENT OF Parks, Recreation & Libraries

Name of Project: JM-51 Park Project

NOTICE TO CONTRACTORS

NOTICE IS HEREBY GIVEN THAT sealed Proposals will be received at the Office of the City Clerk, 311 Vernon Street, Roseville, California, until March 23, 2026 at 3:00 p.m. Late Proposals will be rejected. No exceptions.

The Proposals will be publicly opened and read by the City Clerk or designee of the City of Roseville at 3:05 p.m. on Monday, March 23, 20 26 at the Office of the City Clerk located at 311 Vernon Street, Roseville California for the following project:

JM-51 Park Project.

A pre-bid meeting will be held at N/A- No Pre-bid.

A Project Manual, including all Contract Documents and the Proposal forms for bidding this project, may be obtained on-line from the City of Roseville's website at https://www.roseville.ca.us/business/procurement_services/bids_rfps. All communications relative to this project shall be conducted through Public Purchase.

Bids shall be submitted on the City's Proposal Forms included in the Project Manual, plainly endorsed with the Bidder's name together with signed acknowledgement of any and all addenda. Proposal Forms shall be securely sealed in a suitable envelope marked with the name and address of the Bidder, and marked in capital letters on the front and back of the envelope as

FOR COUNCIL APPROVAL ONLY

follows:

[NAME OF PROJECT]

(Name of Bidder)

(Address of Bidder)

Whether mailed or personally delivered, all bids shall be addressed to the City of Roseville, Office of the City Clerk, 311 Vernon Street, Roseville, California, 95678.

Each bid must be accompanied by a Bid Guaranty in the form of a Certificate of Deposit, Certified or Cashier's Check, Bidder's Bond or Irrevocable Standby Letter of Credit in an amount equal to at least ten percent (10%) of the Bidder's Grand Total Price. The Bid Guaranty will be retained by the City and applied to any and all damages sustained by the City in the event that the successful Bidder fails or refuses to enter into the Contract awarded to it and to furnish all required bonds and Certificates of Insurance. The City intends to award the Contract to the lowest responsible Bidder based on the Grand Total Bid Price for all components of the Project. To the extent allowed by law, the City reserves the right to reject any and all bids and/or to waive any irregularities or informalities in any bid or in the bidding procedure. The City specifically reserves the right to not award the Contract after the opening of bids.

Any bid may be withdrawn at any time prior to the time fixed in the public notice for the deadline submission of bids only by written request for the withdrawal of the bid filed with the City Clerk. The request shall be executed by the Bidder or his or her duly authorized representative. The withdrawal of a bid does not prejudice the right of the Bidder to file a new bid by the submission deadline. Whether or not bids are opened exactly at the time fixed in the public notice for opening bids, a bid will not be received after the deadline submission of bids

FOR COUNCIL APPROVAL ONLY

nor may any bid be withdrawn after the time fixed in the public notice for deadline for submission of bids. Immediately following the deadline for submission of bids all bids shall become the property of the City of Roseville and the City is under no obligation to return bids.

Bids will be examined and reported to the City Council within sixty (60) business days after the bid opening. Except as permitted by applicable law, no Bidder may withdraw its bid for a period of sixty (60) business days after the date of bid opening. Each Bidder will be notified of any award of the Contract by the City.

The City will affirmatively ensure non-discrimination on the basis of one or more of the following: race, religious creed, color, national origin, ancestry, physical disability, mental disability, medical condition, genetic information, marital status, sex, age, sexual orientation, or military and veteran status in the award and administration of contracts that it awards.

Pursuant to Public Contract Code Section 22300, the successful Bidder may submit certain securities in lieu of the City withholding retention of payments during the Project.

The City has determined that the Contractor shall possess a valid Class A, B or C-27 Contractor's license at the time that the bid is submitted, as well as any other license classification as may be required by the laws of the California for the performance of the work specified in the Contract Documents. Said license shall be maintained during the Contract period. Failure to possess the specified license shall render the bid nonresponsive and will act as a bar to the award of the Contract to any Bidder not possessing such a license at the time of bid submittal. The Contractor shall provide certification of the license, its number and the expiration date on the proposal form.

The work is to be done in Placer County. Pursuant to California Labor Code Section 1773, the City has ascertained the General Prevailing Rate of Wages in the County in which the

FOR COUNCIL APPROVAL ONLY

work is to be done to be as determined by the Director of Industrial Relations of the State of California. The Contractor is hereby made aware that information regarding prevailing wage rates may be obtained from the State Department of Industrial Relations and/or the following website address: http://www.dir.ca.gov/dlsr/DPreWageDetermination.htm. The Contractor is required to post a copy of the applicable wage rates at the job site. Attention is directed to Section 5 "Legal Relations and Responsibility" of the General Conditions.

Pursuant to Labor Code Section 1771.1(b), notice is hereby given that a contractor or subcontractor shall not be qualified to bid on, be listed in a bid proposal, subject to the requirements of Section 4104 of the Public Contract Code, or engage in the performance of any contract for public work, as defined in Labor Code Sections 1720, et seq., unless currently registered and qualified to perform public work pursuant to Labor Code Section 1725.5 or exempt from registration requirements pursuant to Labor Code Section 1725.5(f). It is not a violation of Labor Code Section 1771.1 for an unregistered contractor to submit a bid that is authorized by Section 7029.1 of the Business and Professions Code or by Section 10164 or 20103.5 of the Public Contract Code, provided the contractor is registered to perform work pursuant to Labor Code Section 1725.5 at the time the contract is awarded or is exempt from registration requirements pursuant to Labor Code Section 1725.5(f). The Contractor is hereby notified that this project is subject to compliance monitoring and enforcement by the Department of Industrial Relations.

Vehicles with a GVWR greater than 8,500 lbs. and light – duty package delivery vehicles operated in California may be subject to the California Air Resources Board Advanced Clean Fleets regulations. Such vehicles may therefore be subject to requirements to reduce emissions and air pollutants. For more information, please visit the CARB Advanced Clean Fleets

FOR COUNCIL APPROVAL ONLY

webpage at https://ww2.arb.ca.gov/our-work/programs/advanced-clean-fleets. In addition, certain off-road diesel vehicles may be subject to the CARB In-Use Off-Road Diesel-Fueled Fleets Regulation. For more information, please visit the CARB In-Use Off-Road Diesel-Fueled Fleets Regulation webpage at https://ww2.arb.ca.gov/our-work/programs/use-road-diesel-fueled-fleets-regulation.

All questions prior to the deadline for bid submissions shall be directed to the attention of Joel De Jong via Public Purchase Q&A at www.publicpurchase.com or, via email at jdejong@roseville.ca.us. The deadline for submissions of questions and clarifications regarding the Contract Documents is 7 calendar days before the deadline for bid submissions. Only Addenda issued by the City are binding.

_____
City Clerk, City of Roseville

Dated: _____

Published: _____

FOR COUNCIL APPROVAL ONLY

INSTRUCTIONS TO BIDDERS

SECTION 1. GENERAL

1-1.01 **GENERAL.** These Instructions to Bidders form a part of the Contract Documents. Capitalized terms are defined in the General Conditions Section 1.

1-1.02 **EXAMINATION OF PLANS, CONTRACT DOCUMENTS AND SITE OF THE WORK.** The Bidder shall examine carefully the site of the Work and all the Contract Documents, including these Instructions to Bidders, and shall inform itself of the conditions relating to the execution of the Work. Failure to do so will not relieve the successful Bidder of its obligation to enter into an Agreement and complete the Work in strict accordance with the Contract Documents. Conditions relating to the execution of the Work include the requirements of federal, state, and local laws, statutes and ordinances relative to the execution of Work, including, but not limited to, applicable regulations concerning prevailing wage rates, non-discrimination in the employment of labor, protection of the public, employee health and safety, and environmental protection.

The submission of a bid shall be conclusive evidence that the Bidder has investigated and is satisfied as to the conditions to be encountered, as to the character, quality, and scope of Work to be performed, the quantities of materials to be furnished, and as to the requirements of all the Contract Documents.

1-1.03 **EXISTING INFORMATION.** Where the Department has made investigations of site conditions, including subsurface conditions in areas where Work is to be performed under the Contract, such investigations are made only for the purpose of study and design. City does not represent that such conditions as found in these investigations or inferences or conclusions drawn as a result of these investigations will represent actual site

FOR COUNCIL APPROVAL ONLY

conditions and hereby disclaims any liability as a result of Contractor's or Bidder's reliance on such investigations. City will presume that all Bidders have conducted their own site investigations, including investigations of subsurface conditions. Where such investigations have been made, Bidders or Contractors may, upon written request, inspect the records of the Department as to such investigations subject to the conditions set forth in these Instructions to Bidders. Such inspection of records may be made only at the location noted above. The records of such investigations are not a part of the Contract Documents and are shown solely for the convenience of the Bidder or Contractor. The City assumes no responsibility whatsoever with respect to the sufficiency or accuracy of the investigations made, the records thereof, or of the interpretations set forth therein or made by the City in its use thereof. The City makes no warranty or guarantee, either express or implied, that the conditions indicated by such investigations or records are representative of those existing throughout such areas, or any part thereof, or that unforeseen developments may not occur, or that materials other than, or in proportions different from those indicated, may not be encountered.

No information derived from such inspection of records of investigations or compilation thereof made by the City, the Department or from the Engineer, or his or her assistants, will in any way relieve the Bidder or Contractor from properly examining the site and making such additional investigations as it may elect, or from properly fulfilling the terms of the Contract.

FOR COUNCIL APPROVAL ONLY

SECTION 2: BID REQUIREMENTS

2-1.01 **PROPOSAL FORMS.** The Department will furnish to each Bidder standard Proposal Forms, which, when filled out and executed may be submitted as the bid. Proposals shall include all pages in the Project Manual with page numbers marked "PROP" plus the Addendum acknowledgment form (front sheet) from all Addenda received by the Bidder. Proposals shall be removed from the Project Manual. The full Project Manual shall not be submitted with the proposal. Bids not presented on forms so furnished will be disregarded.

The Proposal and one (1) copy thereof shall be submitted as directed in the "Notice to Contractors" under sealed cover plainly marked as a Proposal, and identifying the project to which the Proposal relates and the date of the bid opening therefor. Proposals which are not properly marked may be disregarded.

All blank spaces in the Proposal must be completed, as required, in ink. All price information shall be shown, clearly legible, in figures where required.

The Bidder shall sign the Proposal in the blank space provided therefor. If the Bidder is the sole owner, the Proposal shall be signed by the owner. If the Bidder is a corporation, the legal name of the corporation and its State of incorporation shall be set forth and the Proposal shall be signed by at least two officers authorized to sign contracts on behalf of the corporation. If the Bidder is a partnership, the true name of the firm shall be set forth, the names and addresses of all partners shall be given and the Proposal shall be signed by a partner in the firm authorized to sign contracts on behalf of the partnership. If the Bidder is a joint venture, the Proposal shall be signed on behalf of each participating company by officers or other individuals who have the full and proper authorization to do so. If the Proposal is signed by an agent of the Bidder other than an officer of a corporation or a member of a partnership, a notarized Power of

FOR COUNCIL APPROVAL ONLY

Attorney must be on file with the City prior to opening of bids or must be submitted with the Proposal. If requested by the City, the Bidder shall promptly submit evidence satisfactory to the City of the authority of the person signing the Proposal.

2-1.02 **SUBMISSION OF BIDS.** Bids must be submitted at the prescribed time and location specified in the Notice to Contractors. Any submission received after the prescribed time shall be rejected, regardless of whether or not bids are opened exactly at the prescribed time.

Any unauthorized conditions or qualifications entered on, or changes made to, the Proposal may render it invalid and may cause its rejection.

No telegraphic, telephonic, or facsimile or other electronically transmitted bids will be considered.

2-1.03 **REQUIRED LISTING OF PROPOSED SUBCONTRACTORS.** Each Proposal shall list the name, address and Contractor license number of each Subcontractor to whom the Bidder proposes to subcontract portions of the Work in an amount in excess of one-half of one percent (0.5%) of its total bid, in accordance with Section 4100 to 4114, inclusive, of the Public Contract Code for the State of California. The Bidder shall list the Subcontractor's license number and the portion of the Work that will be done by each Subcontractor. If the Bidder fails to specify a Subcontractor for any portion of the Work, the Bidder agrees to perform that portion of the Work itself, and represents that it is qualified to perform that portion of the Work itself. The Bidder's attention is invited to other provisions of the Public Contract Code related to the imposition of penalties for a failure to observe its provisions by using unauthorized Subcontractors or by making unauthorized substitutions.

2-1.04 **CONTRACTOR'S LICENSING LAWS.** Attention is directed to the

FOR COUNCIL APPROVAL ONLY

provisions of Business and Professions Code Chapter 9 of Division 3 concerning the licensing of Contractors.

All Bidders at the time of bid submittal shall be licensed as Contractors in accordance with the laws of this State. Any Bidder or Contractor not so licensed is subject to the penalties imposed by such laws. The form of Contractor's license required is stated in the Notice to Contractors, provided that the City makes no representation as to whether the State may require other or additional licenses. It is the Bidder's and Contractor's responsibility to obtain the correct Contractor's licenses. Bidders shall be skilled and regularly engaged in the general class or type of Work called for under this Contract.

All Bidders and Contractors, including Subcontractors, shall have a current City business license before undertaking any Work.

2-1.05 **NONCOLLUSION DECLARATION.** By submitting a bid, the Bidder represents and warrants that such bid is genuine and not a sham or collusive or made in the interest or on the behalf of any person therein named, and that the Bidder has not, directly or indirectly, included or solicited any other Bidder to put in a sham bid, or any other person, firm, or corporation to refrain from bidding, and that the Bidder has not in any manner sought collusion to secure the Bidder an advantage over any other Bidder.

Bidders shall submit a properly completed and executed "Noncollusion Declaration" in the form required by Public Contract Code Section 7106 and provided with the Proposal (PROP-11).

2-1.06 **DISQUALIFICATION, REMOVAL OR OTHER PREVENTION OF BIDDING.** A bid may be rejected on the basis of a Bidder, any officer of such Bidder, or any employee of such Bidder who has a proprietary interest in such Bidder, having been disqualified,

FOR COUNCIL APPROVAL ONLY

removed, or otherwise prevented from bidding on, or completing a federal, state, or local project because of a violation of law or a safety regulation.

2-1.07 **PROPOSAL GUARANTY.** All bids shall be accompanied by one of the following forms of Bidder's security: Cash, a cashier's check, a certified check, or a Bidder's bond executed by an admitted California surety insurer, made payable to the City of Roseville, or any other form of security deemed acceptable by the City Attorney. The security shall be in an amount equal to at least ten percent (10%) of the amount bid. A bid will not be considered unless one of the form of Bidder's security is enclosed with it.

A Bidder's bond shall conform to the City's bond form in the Proposal and shall be properly filled out and executed.

2-1.08 **SCHEDULE OF BID PRICES.** Bidders are directed to submit unit and lump sum prices for all Work set forth in the Contract Documents on the Proposal Form entitled "Schedule of Bid Prices."

Unit prices and lump sum prices, as indicated, must be entered in the appropriate spaces provided in the Schedule of Bid Prices. If applicable, unit prices shall be multiplied by the quantities shown, and the total shall be inserted in the Amount column. In the event of any error or discrepancy between the unit price and the calculated amount, the unit prices shall govern. The City may correct any mathematical errors apparent on the face of the bid.

The amounts shown in the Amount column must be added together in arriving at the Grand Total Bid Price.

Amounts for Allowance bid items must be entered in the exact amount in the Amount column.

The prices included within the Schedule of Bid Prices shall include all costs for labor,

FOR COUNCIL APPROVAL ONLY

materials, tools, equipment, services, Subcontractors, suppliers, taxes, insurance, shipment, delivery, overhead, profit, and all other costs necessary to perform the Work in accordance with the Contract Documents.

The Grand Total Bid Price shall be indicated in the Summary table form included with the Schedule of Bid Prices. The Grand Total Bid Price shall be the sum of the amounts bid for each of the designated portions of the Work, as more specifically described on the Schedule of Bid Prices form itself.

Full compensation for complying with the Contract Documents, including requirements of the Standard Specifications, the General Conditions, Supplemental Conditions, and all warranties, shall be considered included in the bid items and no additional compensation shall be allowed therefor.

Full compensation for completion of all work as shown on the plans, as specified in the Specifications, and as directed by the City, shall be considered included in the bid items and no additional compensation shall be allowed.

Bidders are strongly discouraged from submitting unbalanced bids. As used herein, the term "unbalanced bid" is defined as any bid that does not include a reasonable proportionate allocation of indirect costs and profit of each bid item indicated in the Schedule of Bid Prices. The City reserves the right to reject any unbalanced bid if the City determines that there is a reasonable doubt that an acceptance of the bid will not result in the lowest ultimate cost to the City with regard to the work or a disproportionate distribution of contract funds.

The City reserves the right to delete any bid item in its entirety and/or significantly reduce the quantity of Work under a bid item. The City makes no representation that any Work under a bid item will be performed during the course of the Project or that the Work will be

FOR COUNCIL APPROVAL ONLY

performed at the quantities included in the Schedule of Bid Prices. As provided in the General Conditions, for any deleted Work, Contractor shall not be entitled to payment of the indirect costs and profit included for said bid item. All bid items shall be considered distinct and severable from the remaining bid items, and each Bidder acts at its peril if its bid is unbalanced.

The City shall compare bids on the basis of the Grand Total Bid Price, which includes the base bid and any alternates designated on the Schedule of Bid Prices. Alternates may or may not be awarded, or may be awarded in any combination, at the City's discretion.

2-1.09 **WITHDRAWAL OF PROPOSALS.** Any bid may be withdrawn at any time prior to the time fixed in the Notice to Contractors for the opening of bids, provided that a request in writing, executed by the Bidder or its duly authorized representative, for the withdrawal of such bid is filed with the City Clerk. Facsimile and electronic mail requests are not acceptable. The withdrawal of a bid shall not prejudice the right of a Bidder to file a new bid. The withdrawal of any bid after the time fixed in the Notice to Contractors for the opening of bids will not be permitted.

2-1.10 **ADDENDUM.** Proposals shall include all costs and account for all Addenda issued prior to opening of bids. The Bidder is responsible for verifying that all issued Addenda have been received. An Addendum acknowledgment form for each Addendum shall be included as part of the Proposal submittal.

2-1.11 **PUBLIC OPENING OF PROPOSALS.** Proposals will be publicly opened and read at the time and place indicated in the Notice to Contractors. Bidders or their authorized agents are invited to be present.

2-1.12 **TRENCHING AND EXCAVATION WORK.** In accordance with the provisions of California Labor Code Section 6707, if the Work involves construction of a

FOR COUNCIL APPROVAL ONLY

pipeline, sewer, sewage disposal system, boring or jacking pits, or similar trenches or open excavations, which are five feet (5') or deeper, each bid submitted shall contain, as a bid item, adequate sheeting, shoring, and bracing, or equivalent method, for the protection of life or limb, which shall conform to all applicable safety orders.

FOR COUNCIL APPROVAL ONLY

SECTION 3: EVALUATION OF BIDS

3-1.01 **BID EVALUATION PROCESS.** Bids will be evaluated to determine the apparent low Bidder. The apparent low Bidder will be determined on the basis of the Grand Total Bid Price, as shown in the Schedule of Bid Prices. If additive or deductive alternates are used in the Schedule of Bid Prices, the apparent low Bidder will be the Bidder with the lowest total of the bid prices for base contract items plus the alternates designated by the City as those that will be used for determining the lowest bid price. However, the City reserves the right to (1) not award any alternates or (2) award any combination of alternates.

In case of discrepancy between the total of the base contract items and any specified alternates and the stated Grand Total Bid Price, the total of the base contract items plus specified alternates shall prevail. Any mathematical errors that appear on the face of the bid will be corrected by the City and the City will use the mathematically corrected addition. For example, if the mathematical total of Bidder's base contract items plus specified alternates equals $1,000,000, but the Bidder has written $1,250,000 as the Grand Total Bid Price, the City will consider $1,000,000 to be the Bidder's Grand Total Bid Price for purposes of comparison to other Bidders and actual bid award. The City reserves its rights to reject or accept bids based on discrepancies between the stated Grand Total Bid Price and the actual mathematical total of the base contract bid items, plus specified alternates.

3-1.02 **REJECTION OF IRREGULAR PROPOSALS.** Proposals may be rejected in the City's sole discretion if they show any alterations of form, additions not called for, conditional bids, incomplete bids, erasures, or irregularities of any kind. However, the City reserves the right to waive any minor irregularities and informalities in any bid or in the bid procedure for any reason.

FOR COUNCIL APPROVAL ONLY

3-1.03 **COMPETITIVE BIDDING.** If more than one proposal is offered by any individual, firm, partnership, corporation, association, or any combination thereof, under the same or different names, all such proposals may be rejected. A party who has quoted prices on materials or Work to a Bidder is not thereby disqualified from quoting prices to other Bidders, or from submitting a bid directly for the materials or Work.

All Bidders are put on notice that any collusive agreement to control or affect the awarding of this Contract is in violation of the competitive bidding requirements of the City Charter, State Contract Act and the Business and Professions Code and may render void any Contract let under such circumstances.

3-1.04 **RELIEF OF BIDDERS.** If the Bidder claims a mistake was made in its bid, the Bidder shall give the Department written notice within five (5) Days after the opening of the bids of the alleged mistake, specifying in the notice in detail how the mistake occurred. No relief from a claimed mistaken bid shall be granted unless such mistake clearly appears on the face of the bid submitted to the City. Claimed mistakes on backup worksheets, spreadsheets, computerized bidding programs, or any other similar calculative bidding mistake which is not apparent on the face of the bid shall not under any circumstance be considered as a basis for relief. The burden of proving the occurrence of a mistake entitling a Bidder to relief from its bid rests entirely on the Bidder. Relief from bids shall be in the City's sole discretion.

FOR COUNCIL APPROVAL ONLY

SECTION 4: AWARD AND EXECUTION OF CONTRACT

4-1.01 **AWARD OF CONTRACT.** The City reserves the right to reject any and all proposals and to award (or not award) any combination of bid items at its option. Any such award will be to the lowest responsible Bidder whose proposal complies with the requirements prescribed for the bid items awarded. Such award, if made, will be made within sixty (60) business days after the opening of the proposals. If the lowest responsible Bidder refuses or fails to execute the Contract, or provide an acceptable Performance Bond, Payment Bond, and insurance certificate(s), the City may award the Contract to the second lowest responsible Bidder. Such award, if made, will be made within eighty-two (82) business days after the opening of proposals. If the second lowest responsible Bidder refuses or fails to execute the Contract, or provide an acceptable Performance Bond, Payment Bond, and insurance certificate(s), the City may award the Contract to the third lowest responsible Bidder. Such award, if made, will be made within one hundred four (104) business days after the opening of the proposals. The above time periods within which the award of Contract may be made are subject to extension for such further period as may be agreed upon in writing between the City and the Bidder concerned.

FOR COUNCIL APPROVAL ONLY

4-1.02 **RETURN OF BIDDER'S SECURITIES.** Within ten (10) Days after the award of the Contract, the City Clerk will return all Bidders' securities, other than Bidders' bonds, accompanying the proposals that are not to be further considered in making the award. Retained Bidders' securities will be held until the Contract has been fully executed, after which all Bidders' securities, except Bidders' bonds and any Bidders' securities that have been forfeited, will be returned.

4-1.03 **CONTRACT BONDS.** The successful Bidder shall furnish two (2)

bonds in the form contained in the section entitled Insurance Broker Information Packet and Bonds. One (1) bond shall secure the payment of the claims of laborers, mechanics or materialmen employed on the Work under the Contract, and the other bond shall guarantee the faithful performance of the Contract.

Each of the two (2) bonds shall be in a sum equal to one hundred percent (100%) of the Contract Price. If the Contract Price increases by the issuance of Change Orders, the penal amounts of the bonds required shall increase accordingly. Sureties on each of said bonds shall be satisfactory to the City.

All alterations, extensions of time, extra and additional Work, and other changes authorized by the Standard Specifications, the General Conditions, the Supplemental Conditions or any part of the Contract may be made without securing the consent of the surety or sureties on the Contract bonds.

Furthermore, the successful Bidder shall furnish a certificate from the County Clerk as required by California Civil Code of Procedure Section 995.660(a)(3).

4-1.04 **INSURANCE.** At the time of the execution of the Contract, the Contractor shall, at its own expense, procure, and at all times during the prosecution of the Work maintain in full force and effect Worker's Compensation Insurance, and Liability Insurance as specified in the General Conditions. The Contractor shall provide a Certificate of Insurance in the form contained in the section entitled Insurance Broker Information Packet.

4-1.05 **EXECUTION OF CONTRACT.** The Contract shall be signed by the successful Bidder and returned, together with all the required Contract bonds and insurance certificates, within fifteen (15) Days after the Contract has been awarded, or as otherwise directed, in writing, by the City.

FOR COUNCIL APPROVAL ONLY

If the Bidder is an individual, the Contract shall be executed personally by the Bidder. If the Bidder is a partnership, it is desirable that the Contract be executed by all of the partners, but it may be executed by one of them. If the Bidder is a corporation, it must be executed by two officers of the corporation consisting of (1) the chairman of the board, president or vice president; and (2) the secretary, assistant secretary, chief financial officer, treasurer or assistant treasurer, or by a person authorized by the corporation to execute written contracts on its behalf, and the corporate seal affixed thereto. In the alternative, a person other than an officer may sign the Contract, provided evidence satisfactory to the City is provided indicating the individual's authority to bind the corporation. If the corporate seal is not affixed to the Contract, or if it is executed by a person other than officers, or only by one officer, there must be attached to the Contract a certified copy of a resolution of the corporation authorizing such officer or person to execute written contracts for and on behalf of the corporation. If the Bidder is a joint venture, the Contract must be executed on behalf of each participating firm by officers or other individuals who have the full and proper authorization to do so.

4-1.06 **FAILURE TO EXECUTE CONTRACT.** Failure of the lowest responsible Bidder, the second lowest responsible Bidder, or the third lowest responsible Bidder to execute the Contract and file acceptable bonds and insurance as provided within fifteen (15) Days after the Contract has been awarded, or as otherwise directed, in writing, by the City, shall be just cause for annulment of the award and forfeiture of the Bidder's security. The successful Bidder may file with the City Clerk a written notice, signed by the Bidder or Bidder's authorized representative, specifying that the Bidder will refuse to execute the Contract if presented to Bidder. The filing of such notice shall have the same force and effect as the failure of the Bidder to execute the Contract and furnish acceptable bonds within the time prescribed.

FOR COUNCIL APPROVAL ONLY

SECTION 5: BID PROTEST PROCEDURES

5-1.01 **POLICY/PROCEDURES.** It is the policy of the City to consider fully and adjudicate promptly protests filed by prospective Bidders relating to the City's bidding procedure or award of the Contract. Protests shall be filed and processed in accordance with Section 4.12.150 of the Roseville Municipal Code. A Bidder's failure to follow the bid protest procedures may result in rejection of the protest by the City.

FOR COUNCIL APPROVAL ONLY

PROPOSAL TO THE DEPARTMENT OF Parks, Recreation & Libraries

Project: JM-51 Park Project

Name of Bidder _____ Business Phone _____

Business Address _____

Place of Business _____

Contractor's License No. _____

License Expiration Date_____

License Classification Type _____

DIR Registration No. _____

Type of business organization: _____

*If a Corporation, incorporated under the laws of the State of: _____

City of Roseville Business License No._____

The undersigned Bidder herewith submits this Proposal and binds itself on award by the City of Roseville under this bid to execute a Contract in accordance with its bid and the Contract Documents.

The Notice to Contractors, Instructions to Bidders, Form of Agreement, Specifications, General Conditions, Supplemental Conditions, Contract Drawings, and Addenda, if any, are made part of this bid and all provisions thereof are hereby accepted, and all representations and warranties are required thereby are hereby affirmed.

The work to be done is described in the Bidding Documents entitled _____

_____, City of Roseville, California.

This offer shall be irrevocable for a period of sixty (60) Days after the date on which bids are opened.

FOR COUNCIL APPROVAL ONLY

The undersigned Bidder understands that any clarification made to the above or any new and different conditions or information submitted on or with its Proposal, other than that requested, may render the bid non-responsive.

The undersigned, as Bidder, declares that the only persons or parties interested in this Proposal as principals are those named herein; that this Proposal is made without collusion with any other person, firm, or corporation; that the Bidder has carefully examined the location of the proposed Work, the attached Form of Agreement, and the plans, Specifications, and other Contract Documents; and agrees if this Proposal is accepted, that it will contract with the City of Roseville, in the form of a copy of the Agreement contained in the Project Manual, to provide all necessary machinery, tools, apparatus and other means of construction, and to do all the work and furnish all the materials specified in the Contract Documents, in the manner and time therein prescribed, and according to the requirements of the Director, as therein set forth, and that the Bidder will take in full payment therefore prices indicated in the Schedule of Bid Items, including all work modified by addendum numbers _____. (IF NONE, STATE NONE).

Bids are required for all Bid Items. The amount of the Bid for comparison purposes will be the total of all items awarded.

The Bidder shall set forth for each item of work, in clearly legible figures, an item ("unit") price and a total for the item in the respective spaces provided for this purpose in the Schedule of Bid Items.

The prices included within the Schedule of Bid Items include all costs for labor, materials, tools, equipment, services, Subcontractors, suppliers, taxes, insurance, shipment, delivery, overhead, profit, and for all other costs necessary to perform the Work in accordance

FOR COUNCIL APPROVAL ONLY

with the Contract Documents.

Accompanying this Proposal is _____.

(Notice: Insert the words "Cash $_____," "Cashier's Check," "Certified Check," or "Bidder's Bond," as the case may be, in an amount equal to at least ten percent (10%) of the total of the Bid.)

The names of all persons interested in the foregoing Proposal as Principals, are as follows: _____

_____

_____

_____

If SOLE OWNER, execute here:

I sign as sole owner of the business named above:

_____

If PARTNERSHIP, one or more partners sign here:

The undersigned certify that we are partners in the business named above and that we sign this bid with the full authority to do so:

_____

_____

If CORPORATION, execute here:

Corporate Name: _____

FOR COUNCIL APPROVAL ONLY

Incorporated under the laws of the State of _____

The undersigned certify that they sign this bid with the full and proper authorization so to do:

By_____	By_____
*Signature of Authorized Official**	*Signature of Authorized Official**
_____	_____
Title	*Title*
_____	_____
Typewritten or Printed Name	*Typewritten or Printed Name*

If JOINT VENTURE, execute here:

Joint Venture name composed of: _____

The undersigned certify that they sign this bid with the full and proper authorization so to do:

_____	_____
*Signature of Authorized Official**	*Signature of Authorized Official**
_____	_____
Title	*Title*
_____	_____
Typewritten or Printed Name	*Typewritten or Printed Name*

FOR COUNCIL APPROVAL ONLY

*If Bidder is a partnership or Joint Venture, give the full names of all partners and/or Joint Ventures in the space provided (use additional sheet if required). If Bidder is a corporation, two signatures are required as follows: (1) the Chairman, President, or Vice-President and (2) the Secretary, Assistant Secretary, Chief Financial Officer, Treasurer, or Assistant Treasurer. In the alternative, this Agreement may be executed by a single officer or a person other than an officer provided that evidence satisfactory to City is provided demonstrating that such individual is authorized to bind the corporation (example, a copy of a certified resolution from the corporation's board or a copy of the corporation's bylaws).

[LIST OF SUBCONTRACTORS FOLLOWS ON NEXT PAGE.]

FOR COUNCIL APPROVAL ONLY

LIST OF SUBCONTRACTORS

Contractor's Name: _____

The Bidder is required to furnish the following information in accordance with the provisions of Section 4100 and 4114, inclusive, of the Public Contract Code of the State of California. This list and information shall include all Subcontractors that perform work, provide labor or render services to the Bidder in connection with the Project in an amount in excess of one-half of one percent (0.5%) of the total amount of the Bidder Grand Total Price.

FOR COUNCIL APPROVAL ONLY

PORTION/ TYPE OF WORK	% OF CONTRACT	SUB-CONTRACTOR'S NAME	CONTRACTOR LICENSE NO.	DIR REG NO.	BUSINESS ADDRESS (CITY, STATE)

SECURITY FOR COMPENSATION CERTIFICATE

(Required by California Labor Code Section 1861)

TO: City Council
City of Roseville

I am aware of the provisions of Section 3700 of the Labor Code which require every employer to be insured against liability for workers' compensation or to undertake self-insurance in accordance with the provisions of that code, and I will comply with such provisions before commencing the performance of the work of this Contract.

FOR COUNCIL APPROVAL ONLY

_____

_____
(Signature of Bidder)

_____

_____
Business Address

_____
Telephone

BIDDER'S BOND

City Council of the City of Roseville

KNOW ALL MEN BY THESE PRESENTS:

That we _____

_____, as PRINCIPAL, and

_____

a, _____ and duly authorized to transact business under the laws of the State of California, as SURETY, are held and firmly bound unto the City of Roseville in the penal sum of _____ dollars ($_____), being at least TEN PERCENT (10%) OF THE TOTAL AMOUNT OF THE BID of the Principal above named, submitted by said Principal to the City of Roseville, acting by and through the Public Works Director, for the work described below, for the payment of which sum in lawful money of the United States, well and truly to be made, to the Director of the Department to which said Bid was submitted, we bind ourselves, our heirs, executors, administrators and successors, jointly and severally, firmly by these presents.

FOR COUNCIL APPROVAL ONLY

THE CONDITION OF THIS OBLIGATION IS SUCH,

That whereas the Principal has submitted the above-mentioned Bid to the City Council of the City of Roseville, as aforesaid, for certain construction specifically described as follows, for which Bids are to be opened at the Office of the City Clerk located at 311 Vernon Street, Roseville, California, on _____, 20__ FOR

_____

(Copy here the exact title of work as it appears on the Proposal.)

NOW, THEREFORE, IF THE AFORESAID PRINCIPAL is awarded the Contract and, within the time and manner required under the Contract Documents, after the prescribed forms are presented for signature, enters into a written Contract, in the prescribed form, in accordance with the Bid, and files all insurance and two (2) Bonds with the Department, one (1) to guarantee Faithful Performance and the other to guarantee Payment for Labor and Materials, as required by law, then this obligation shall be null and void; otherwise, it shall be and remain in full force and effect.

IN WITNESS WHEREOF, we have hereunto set our hands and seals on this _____ day of _____, 20___.

_____(Seal)

_____(Seal)

_____(Seal)
Principal

_____(Seal)

_____(Seal)

_____(Seal)
Surety

_____

_____
Business Address

FOR COUNCIL APPROVAL ONLY

NOTE: To be considered complete, both the Principal and the Surety must sign this Bidder's Bond. In addition, signatures of those executing for the Surety must be properly acknowledged.

Project JM-51 Park Project

Contractor _____

SCHEDULE OF BID ITEMS

FOR COUNCIL APPROVAL ONLY

SCHEDULE OF BID ITEMS

JM-51 PARK

The bidder, in compliance with the published Notice to Contractors, having examined the Plans and Specifications, any and all addenda, any related documents, and all of the sites of the proposed work, and being familiar with all the conditions surrounding the construction of the proposed project, including the availability of material, hereby proposes to furnish all labor, materials, and supplies, and to construct the project in accordance with the Contract Documents, within the time period set forth therein, and at the prices stated. This is a lump sum bid project. These prices are to include all labor, materials, supplies, and all other expenditures incidental to complete compliance to the Contract Documents.

The work to be included in the Contract shall be determined by the City prior to award of Contract. **The amount of the bid for comparison and award purposes shall be the total amount set forth in the "Grand Total Bid Price".** The City reserves the right to award none, all or selected add alternates as the budget permits.

BASE BID:
Base bid includes all work as shown on the plans, project manual, and addenda to construct the **JM-51 Park** project.

Numerical **Base** Bid: $_____

Written **Base** Bid: _____ dollars and _____

ADD ALTERNATES:

Add Alternate #1 – Additional Seeded Turf Area with Irrigation and Mow Band

Numerical **Additive Alternative #1** Bid: $_____

Written **Additive Alternative #1** Bid: _____ dollars and _____

Add Alternate #2 – Sod In Lieu of Seeded Turf in Alt-1 Area (contingent on award of Alt-1)

Numerical **Additive Alternative #2** Bid: $_____

Written **Additive Alternative #2** Bid: _____ dollars and _____

Add Alternate #3 – Sod In Lieu of Seeded Turf in Base Bid Area

Numerical **Additive Alternative #3** Bid: $_____

Written **Additive Alternative #3** Bid: _____ dollars and _____

Add Alternate #4 – Half-Court Basketball and Benches

Numerical **Additive Alternative #4** Bid: $_____

Written **Additive Alternative #4** Bid: _____ dollars and _____

FOR COUNCIL APPROVAL ONLY

SCHEDULE OF BID ITEMS- continued

Add Alternate #5 – Concrete Pathways in Lieu of Rock Nature Trails

Numerical **Additive Alternative #5** Bid: $_____

Written **Additive Alternative #5** Bid: _____ dollars and _____

GRAND TOTAL BID PRICE:

Lump Sum Base Bid plus Add Alternates #1 through #5

Numerical **Grand Total Bid Price**: $_____

Written **Grand Total Bid Price**: _____ dollars and _____

The additions/deletions sheets (PROP – 13C through PROP – 13E) are required to be completed in their entirety.

The additions/deletions sheets will not be considered for bid award but may be used for contract change orders.

Contractor Name (print or type): _____

Signature (by authorized representative): _____

Date: _____ License No.: _____ Class: _____

FOR COUNCIL APPROVAL ONLY

JM-51 PARK PROJECT

For Additions and Deletions Only

Contractor shall provide itemized costs as shown below for use during construction for additions or deletions only. Unit costs to be listed are based on the project plans, specifications, Parks Construction Standards and the Design & Construction Standards, unless otherwise noted. Items listed are not necessarily shown on the plans or identified in the Technical Specifications.

Item	Description	Unit	Unit Cost
1	EC-2 Preservation of Existing Vegetation	sf	
2	EC-3 Hydraulic Mulch	sf	
3	EC-4 Hydroseeding	sf	
4	EC-6 Straw Mulch	sf	
5	EC-7 Geotextiles and Mats	sf	
6	EC-8 Wood Mulching	sf	
7	EC-10 Velocity dissipation device	ea	
8	EC-11 Slope Drains	ea	
9	EC-14 Compost Blanket	sf	
10	EC-16 Non-Vegetative Stabilization	sf	
11	SE-1 Silt Fence	lf	
12	SE-5 Fiber Rolls	lf	
13	SE-6 Gravel Bag Berm	ea	
14	SE-7 Street Sweeping and Vacuuming	ea	
15	SE-8 Sandbag Barrier	lf	
16	SE-9 Straw Bale Barrier	lf	
17	SE-10 Storm Drain Inlet Protection	ea	
18	TC-1 Stabilized construction entrance/exit	ea	
19	TC-3 Entrance/outlet tire wash	ea	
20	Clearing and Grubbing	sf	
21	Site Security Fencing	lf	
22	Rough Grading (Earthwork)	cy	

Items 1 through 19 are to be consistent with requirements detailed in California Stormwater Quality Association Stormwater Best Management Practice Handbook, latest edition.

FOR COUNCIL APPROVAL ONLY

JM-51 PARK PROJECT

For Additions and Deletions Only (continued)

Item	Description	Unit	Unit Cost
23	Finish grading (earthwork)	sf	
24	1" Schedule 80 PVC Pipe	lf	
25	12" Storm drain, PVC, SDR-35	lf	
26	6" Storm drain, PVC, SDR-35	lf	
27	4" Storm drain, PVC, SDR-35	lf	
28	4" Sanitary Sewer, SDR-35	lf	
29	1" Domestic Water Service, meter, backflow	ls	
30	2" Recycled Water Service, Meter	ea	
31	Sanitary Sewer Cleanout	ea	
32	12"x12" Storm Drain Catch Basin	ea	
33	24"x24" Storm Drain Drop Inlet	ea	
34	Storm Drain Connection to Existing SD Stub	ea	
35	Electrical POC	ls	
36	Concrete Paving - ROW (per DS Standard)	sf	
37	Concrete Paving (per Parks detail PK-31)	sf	
38	Redwood Header Board	lf	
39	Concrete Mow Curb (6")		
40	Concrete Mow Curb (12")	lf	
41	Stabilized Decomposed Granite Paving	sf	
42	Drinking Fountain with Bottle Filler	ea	
43	Picnic Table	ea	
44	Picnic Table, Accessible	ea	
45	Park Bench with Back	ea	
46	Basketball Hoop, standard, backboard, Assembly	ea	
47	Park Identification Sign	ea	
48	16' Pole Light LED	ea	
49	Trash Receptacle	ea	
50	Play Area Curb (PK-36)	lf	

FOR COUNCIL APPROVAL ONLY

JM-51 PARK PROJECT

For Additions and Deletions Only (continued)

Item	Description	Unit	Unit Cost
51	Play Equipment (small)	ls	
52	Engineered Wood Fiber (12" depth)	cy	
53	Drain rock (3" depth)	cy	
54	Play Area Access Ramp	ea	
55	Playground Rules Sign	ea	
56	Irrigation Booster Pump	ls	
57	Irrigation Controller with Enclosure	ea	
58	2" Recycled Water Filter (Amiad)	ls	
59	Flow meter and Master Valve	ls	
60	Irrigation Mainline 3"	lf	
61	Irrigation Control Wire (#12,#14 AWG-UF)	lf	
62	6" Sleeve (Sch 40)	lf	
63	Irrigation Lateral Lines PVC	lf	
64	Irrigation Remote Control Valve 2"	ea	
65	Irrigation Remote Control Valve 1.5"	ea	
66	Irrigation Remote Control Valve 1"	ea	
67	Quick Coupling Valve 1"	ea	
68	R-VAN Rotary Assembly incl. Swing Joint	ea	
69	Tree Bubbler	ea	
70	Soil Amendments	sf	
71	Hydroseeded Turf	sf	
72	Sodded Turf	sf	
73	Install Trees (15 Gal.)	ea	
74	Install Trees (24" Box)	ea	
75	Install Shrubs (5 Gallon)	ea	
76	Install Shrubs/Grasses (1 Gallon)	ea	
77	Install Groundcover Roses (2 Gallon)	ea	
78	Bark Mulch (3")	cy	
79	Landscape Maintenance (per 30 Day)	ea	

FOR COUNCIL APPROVAL ONLY

NONCOLLUSION DECLARATION TO BE EXECUTED BY
BIDDER AND SUBMITTED WITH BID

The undersigned declares:

I am the _____ of _____, the party making the foregoing bid.

The bid is not made in the interest of, or on behalf of, any undisclosed person, partnership, company, association, organization, or corporation. The bid is genuine and not collusive or sham. The Bidder has not directly or indirectly induced or solicited any other Bidder to put in a false or sham bid. The Bidder has not directly or indirectly colluded, conspired, connived, or agreed with any Bidder or anyone else to put in a sham bid, or to refrain from bidding. The Bidder has not in any manner, directly or indirectly, sought by agreement, communication, or conference with anyone to fix the bid price of the Bidder or any other Bidder, or to fix any overhead, profit, or cost element of the bid price, or of that of any other Bidder. All statements contained in the bid are true. The Bidder has not, directly or indirectly, submitted his or her bid price or any breakdown thereof, or the contents thereof, or divulged information or data relative thereto, to any corporation, partnership, company, association, organization, bid depository, or to any member or agent thereof, to effectuate a collusive or sham bid, and has not paid, and will not pay, any person or entity for such purpose.

FOR COUNCIL APPROVAL ONLY

Any person executing this declaration on behalf of a Bidder that is a corporation, partnership, joint venture, limited liability company, limited liability partnership, or any other entity, hereby represents that he or she has full power to execute, and does execute, this declaration on behalf of the Bidder.

I declare under penalty of perjury under the laws of the State of California that the foregoing is true and correct and that this declaration is executed on _____ [date], at _____ [city], _____ [state].

_____
(Signature of Declarant)

DISQUALIFICATION QUESTIONNAIRE

The Bidder shall complete, under the penalty of perjury, the following questionnaire:

Has the Bidder, any officer of the Bidder, or any employee of the Bidder who has proprietary interest in the Bidder, ever been disqualified, removed, or otherwise prevented from bidding on, or completing a federal, state, or local government project because of a violation of law or a safety regulation?

Yes_____ No_____

If the answer is yes, explain the circumstances in the following space.

_____

_____

_____

_____

_____

_____

FOR COUNCIL APPROVAL ONLY

NAME OF BIDDER: _____

SIGNATURE OF BIDDER: _____

TITLE OF BIDDER: _____

DATE: _____

ACKNOWLEDGEMENT OF INSURANCE AND BOND REQUIREMENTS

Included in the Bid Price is full compensation for the requirements set forth in the INSURANCE BROKER INFORMATION PACKET of the Project Manual.

NAME OF BIDDER: _____

SIGNATURE OF BIDDER: _____

TITLE OF BIDDER: _____

DATE: _____

FOR COUNCIL APPROVAL ONLY

DISCLAIMER OF WARRANTIES AND ACCURACY OF DATA

Although soil and site investigation reports have been obtained from sources believed to be reliable, no warranty expressed or implied is made regarding accuracy, adequacy, completeness, legality, reliability or usefulness of any information contained therein. These reports are subject to change at any time, may be incomplete, and/or may contain errors. This information is provided for informational purposes only. The City of Roseville provides this information on an "as is" basis. Warranties of any kind, express or implied, or statutory, including but not limited to the implied warranties of merchantability, and fitness for a particular purpose ARE DISCLAIMED to any party viewing these documents or to any third party.

The City of Roseville does not accept and expressly disclaims liability to any party viewing such information, or to any third party whatsoever, for any loss, damage, or injury (including incidental or consequential damages) whether such loss, damage, or injury is the result of negligence, willful or intentional misconduct, or any other cause.

I have read and acknowledged the above disclaimer and agree to hold harmless the City of Roseville on any theory of liability for any loss, damage or injury whether in contract, strict liability or tort arising in any way out of the use or contents of the released information or documents described above or the performance of the work called for herein.

FOR COUNCIL APPROVAL ONLY

Print Name	Signature
Name of Business/Company/Corporation	Date
Address	Phone

END OF PROPOSAL

FOR COUNCIL APPROVAL ONLY

A G R E E M E N T

THIS AGREEMENT, is made and entered into this _____ day of _____, 20_____, by and between the City of Roseville, a municipal corporation, ("CITY"), and _____, a _____, ("CONTRACTOR"); and

W I T N E S E T H:

WHEREAS, the City Council of the CITY, at a meeting held on the ____day of _____, 20_____, approved plans and specifications for the _____

and directed the City Clerk to advertise for sealed proposals for doing said work and providing that bids be submitted on the _____ day of _____, 20_____; and

WHEREAS, the City Clerk, thereafter duly and regularly caused a notice to be published in the manner and for the time prescribed by law; and

WHEREAS, CONTRACTOR, pursuant to the provisions of said notice duly filed a bid with the City Clerk, a true copy of which bid is now on file in the office of the City Clerk, and is hereby referred to and by this reference made a part hereof as fully as if set forth at length herein; and

WHEREAS, all bids received pursuant to said notice were opened and examined and publicly declared at the time specified in said advertisement for bids and at a meeting of the City Council held on the _____ day of _____, 20_____, the Council found and

FOR COUNCIL APPROVAL ONLY

declared the bid of CONTRACTOR to be the lowest responsible bid and thereupon awarded a contract to CONTRACTOR to do the work referred to in the aforementioned specifications.

NOW, THEREFORE, the parties agree as follows:

1. THE WORK. CONTRACTOR agrees:

a. To do the work and furnish all the labor, materials, tools, supplies, equipment, superintendence, insurance, and bonds required for the _____

_____

in accordance with the Contract Documents (the Work).

b. To do and perform the Work contemplated hereby in a good and workmanlike manner under the direction of and to the satisfaction of the Director of Public Works of the City of Roseville.

2. PAYMENT. CITY shall pay CONTRACTOR _____

_____ dollars ($_____) for the Work to be done under this Agreement in accordance with the Contract Documents.

3. CONTRACT DOCUMENTS. The complete Agreement between the parties hereto consists of the following documents:

a. The advertisement for bids (including the notice to bidders, instructions to bidders and proposals);

b. The accepted bid;

c. Plans and specifications (including general conditions, supplemental conditions, special provisions and construction details);

d. Bonds and insurance required by the specifications; and

FOR COUNCIL APPROVAL ONLY

e. This contract.

All documents specified above are intended to operate so that any work called for in any one and not mentioned in the other, or vice versa, is to be executed the same as if mentioned in all said documents.

4. LIQUIDATED DAMAGES. In the event CONTRACTOR does not complete the Work within the time specified, CONTRACTOR agrees that CITY will suffer damages. Inasmuch as the actual damages which would result from such breach by CONTRACTOR under this Agreement are uncertain, and would be impractical or extremely difficult to fix, CONTRACTOR agrees that it shall pay, or CITY shall deduct from CONTRACTOR's fee, the amount of $_____ per day as liquidated damages, in the event of such delay.

5. TIME OF COMPLETION. Time is of the essence of this Agreement. CONTRACTOR shall complete all Work under the Contract Documents within _____ Days of the date of this Contract. CONTRACTOR shall begin work by the date specified in the "Notice to Proceed" letter and shall diligently prosecute all of the Work under this Contract in all parts and requirements as defined in the Contract Documents.

6. SERVICE OF NOTICE. Any notice required or permitted to be given under this Agreement shall be deemed given when (a) personally delivered to the recipient identified below; (b) mailed by registered or certified mail, return receipt requested, postage pre-paid, to the address specified below; or (c) sent by facsimile, with confirmation of receipt, to the facsimile number identified below.

CITY OF ROSEVILLE	CONTRACTOR
_____	_____
_____	_____
_____	_____
_____	_____

FOR COUNCIL APPROVAL ONLY

CITY may also act through either its architect or construction manager if CITY expressly gives notice to CONTRACTOR, in writing, that CITY's designee has authority to act for CITY in a specific capacity.

7. DISPUTES. Disputes arising from this Agreement will be determined in accordance with the Contract Documents and Public Contract Code Sections 10240-10240.13.

8. GOVERNING LAW. This Agreement shall be governed by and construed in accordance with the laws of the State of California.

9. INDEPENDENT CONTRACTOR. CONTRACTOR shall act as an independent contractor, and covenants and agrees that it will conduct itself consistent with such status, that it will neither hold itself out as, nor claim to be, an officer or employee of CITY by reason of this Agreement.

10. SUCCESSORS IN INTEREST. This Agreement shall be binding upon the heirs, successors, executors, administrators and assigns of the respective parties hereto.

11. MODIFICATION. This Agreement and each provision contained herein may be waived, amended, supplemented or eliminated only by mutual written agreement of the parties.

12. SEVERABILITY. If any of the provisions contained in this Agreement are for any reason held invalid or unenforceable, such holding shall not affect the remaining provisions or the validity and enforceability of the Agreement as a whole.

13. INTEGRATED AGREEMENT. This is an integrated agreement and contains all of the terms, considerations, understanding and promises of the parties. It shall be read as a whole.

14. CONTRACTORS LICENSE LAW. CONTRACTORS ARE REQUIRED BY LAW TO BE LICENSED AND REGULATED BY THE CONTRACTORS' STATE LICENSE

FOR COUNCIL APPROVAL ONLY

BOARD WHICH HAS JURISDICTION TO INVESTIGATE COMPLAINTS AGAINST CONTRACTORS IF A COMPLAINT REGARDING A PATENT ACT OR OMISSION IS FILED WITHIN FOUR (4) YEARS OF THE DATE OF THE ALLEGED VIOLATION. A COMPLAINT REGARDING A LATENT ACT OR OMISISON PERTAINING TO STRUCUTRAL DEFECTS MUST BE FILED WITHIN TEN (10) YEARS OF THE DATE OF THE ALLEGED VIOLATION. ANY QUESTIONS CONCERNING A CONTRACTOR MAY BE REFERRED TO THE REGISTRAR, CONTRACTORS' STATE LICENSE BOARD, P.O. BOX 26000, SACRAMENTO, CALIFORNIA 95826.

IN WITNESS WHEREOF, the City of Roseville, a municipal corporation, has authorized the execution of this Agreement in duplicate by its City Manager and attestation by its City Clerk under authority of Resolution No. _____, adopted by the Council of the City of Roseville on the ____day of _____, 20_____, and CONTRACTOR has caused this Agreement to be duly executed.

FOR COUNCIL APPROVAL ONLY

CITY OF ROSEVILLE, a municipal corporation

BY:_____
DOMINICK CASEY
City Manager

ATTEST:

BY:_____
CARMEN AVALOS
City Clerk

_____, a
_____

BY: _____
its: _____

and

BY: _____
its: _____

APPROVED AS TO FORM:

BY: _____
MICHELLE SHEIDENBERGER
City Attorney

APPROVED AS TO SUBSTANCE:

BY: _____

Print Name:_____

Title:_____

FOR COUNCIL APPROVAL ONLY

INSURANCE BROKER INFORMATION PACKET

Project:_____

NOTICE TO CONTRACTOR:

For your convenience, this package contains the Requirements for Insurance and Bonds for this project, including the necessary City forms. You are required to return these forms in addition to the executed Contract within fifteen (15) calendar days after the award of the Bid, unless otherwise directed by City in writing. (See the Instructions to Bidders.)

Please insert the dollar amount of your accepted Bid into the blank on page INS-1 and present this entire package to your insurance broker if you are awarded the Bid.

FOR COUNCIL APPROVAL ONLY

TABLE OF CONTENTS

	Page
Notice to Insurance Broker	INS 1
Insurance Requirements	INS 2
Public Works Faithful Performance Bond	INS 10
Public Works Payment Bond	INS 13

FOR COUNCIL APPROVAL ONLY

NOTICE TO INSURANCE BROKER

Your client has been awarded a bid by the City Council of the City of Roseville to perform a public works project known as _____. The Contract Conditions for that project require your client ("the Contractor") to return certain evidence of insurance and bonds to the City Attorney of the City within fifteen (15) days after the Bid award, unless otherwise directed by the City in writing, or else the Bid award may be terminated and awarded to another company.

This package contains the information you will need as an insurance broker to provide the appropriate insurance and bonds to the City. The insurance coverages the Contractor needs are specified in the section entitled "Insurance Requirements." Please note that, in addition to the insurance certificate itself, copies of several endorsements must be actually furnished.

Please refer to the Supplemental Conditions for modifications of the General Conditions, if any, and the requirements of this insurance packet.

Please use the standard City of Roseville Bond Forms provided in this package.

The Bonds required must each be in the penal amount of: $_____.

Bonds must be sent to the following staff person:

_____

_____

_____

Insurance documents must be provided using one of the following methods:

a. By email to roseville@ebix.com

b. By fax to (770) 335-5727

After using one of these methods, please **DO NOT** also send the insurance certificate(s) by mail.

c. Or mail the documents to

City of Roseville
Insurance Compliance
P.O. Box 100085-R1
Duluth, GA 30096

FOR COUNCIL APPROVAL ONLY

When forwarding the documents, please refer to the project name so that the documents can be matched with the Contract for which they are submitted.

Thank you.

FOR COUNCIL APPROVAL ONLY

INSURANCE REQUIREMENTS

The following sections are quoted from the General Conditions:

5-1.23 **INSURANCE COVERAGE.**

A. Evidence of Maintenance Required. The Contractor shall, at its expense, procure and at all times maintain in full force and effect at a minimum the insurance required by this section on all of its operations; and the Contractor shall not allow any Subcontractor to commence work until similar insurance required of the Subcontractor has been obtained and filed. An original Certificate of Insurance, and copies of all required endorsements, all in a form approved by the Risk Manager, evidencing all required coverage or policies shall be filed after the award of the bid and prior to approval of the Contract by the City Council. Contractor shall provide ten (10) days prior written notice to the City of any reduction of coverage limits or cancellation of the coverage or policies shall be given to the City of Roseville as Certificate holder.

B. Qualifying Insurers. With the exception of the State Compensation Insurance Fund, all required insurance policies shall be issued by companies acceptable to the City and licensed to do business in the State of California and who hold a current policy holders alphabetic and financial size category rating of not less than AVII according to the most recent issue of Best's Insurance Reports.

C. Insurance Required.

1. **Commercial General Liability (CGL):** Insurance Services Office Form CG 00 01 covering CGL on an "occurrence" basis, including products and completed operations with limits of no less than Two Million Dollars ($2,000,000) per occurrence for bodily injury, personal injury and property damage for projects under One Million Dollars ($1,000,000) and

FOR COUNCIL APPROVAL ONLY

limits of no less than Five Million Dollars ($5,000,000) per occurrence for bodily injury, personal injury and property damage for projects over One Million Dollars ($1,000,000). If a general aggregate limit applies, either the aggregate limit shall apply separately to this project or the general aggregate limit shall be twice the required occurrence limit.

The Commercial General Liability insurance shall include the following, copies of which shall be provided:

a. Inclusion of the City of Roseville, and its officers, agents, employees, and volunteers, as additional insureds (except for workers' compensation) as respects services or operations under the Contract. The additional insured endorsement for the general liability policy shall be at least as broad as the ISO CG 2010 10 01 combined with ISO CGL Endorsement CG 2037 10 01. Any other endorsement must be approved in writing by the City. Endorsements must include coverage for on-going and completed operations, which coverage shall be maintained for four (4) years following completion of the Project. Endorsements shall cover the City of Roseville, its officers, agents, employees, and volunteers.

b. The insurance shall provide coverage for claims by one insured against another insured and the policies shall not contain any cross-suits exclusions, cross-liability exclusions, or insured versus insured exclusions. The policies shall not contain any classification exclusions purporting to deny coverage for any work to be performed by Contractor or any of its Subcontractors.

c. Stipulation that the insurance is primary and noncontributory, as evidenced by a separate endorsement (CG 20 01 04 13 or an equivalent) or section of the policy, and that neither the City nor its insurers will be called upon to contribute to a loss.

d. Such insurance shall specifically cover the contractual liability of

FOR COUNCIL APPROVAL ONLY

the Contractor.

e. Any available insurance proceeds in excess of the specified minimum insurance coverage requirements and limits shall be available to the additional insureds. Furthermore, the requirements for coverage and limits shall be: (1) the minimum coverage and limits specified in this Agreement; or (2) the full coverage and maximum limits of any insurance proceeds available to the named insureds, whichever is greater.

f. Waiver of subrogation endorsement.

g. The Contractor shall furnish a certificate for the period covered.

2. **Automobile Liability:** Insurance Services Office Form Number CA 0001 covering Code 1 (any auto), or if Contractor has no owned autos, Code 8 (hired) and Code 9 (non-owned), with limits of no less than One Million Dollars ($1,000,000) per accident for bodily injury and property damage.

3. **Workers' Compensation:** In accordance with the provisions of the California Labor Code, Contractor is required to be insured against liability for Workers' Compensation or to undertake self-insurance. Statutory Workers' Compensation and Employers' Liability of at least One Million Dollars ($1,000,000) shall cover all Contractors staff while performing any work incidental to the performance or this Agreement.

4. **Professional Liability:** Professional Liability (Errors and Omission) Insurance appropriate to Contractor's profession, with a limit of liability not less than One Million Dollars ($1,000,000) per occurrence or claim and Two Million Dollars ($2,000,000) aggregate to cover all design and engineering services rendered by Contractor pursuant to the Agreement. Coverage must commence from the first day that Contractor or any of its Subcontractors provided any design or engineering services in connection with the Project.

FOR COUNCIL APPROVAL ONLY

5. **Builder's Risk/Course of Construction Insurance Is ____ OR Is Not _X_ Required by Risk Management:** The Contractor shall be responsible for all loss, damage or destruction whatsoever to the work called for by this Contract until the approval of a Notice of Completion or acceptance of the Work if no Notice of Completion is to be recorded.

The Contractor shall secure "All Risk" type of builder's Risk Insurance of the type covering one hundred percent (100%) of the value of the work performed under this Contract (the value is presumed to be the Contract amount unless otherwise stated in Supplemental Conditions) and all materials, equipment, or other items to be incorporated therein while the same are located at the construction site, a bonded warehouse, or its place of manufacture. At any time, the policy shall cover the value of the work completed. The policy shall cover hazards including the losses due to fire, explosion, hail, rain, lightning, flood (separate insurance as needed), vandalism, malicious mischief, wind, collapse, aircraft, and smoke.

The policies providing such insurance shall name the City as a loss payee as its respective interests may appear, and certified copies of such policies shall be filed with the City. The maximum deductible allowable under the Builder's All Risk policy shall be five percent (5%) of the Contract amount.

Builder's Risk Insurance is not required for coverage of losses in excess of five percent (5%) of the Contract amount for damages resulting from earthquake in excess of a magnitude of 3.5 on the Richter scale, or tidal waves. Coverage in the amount of five percent (5%) of the Contract amount for such losses is required.

6. **Pollution Coverage:** Contractor shall procure pollution liability coverage or other insurance covering claims for bodily injury or property damage arising out of the abatement, removal, storage, transportation, or other exposure to hazardous materials or

FOR COUNCIL APPROVAL ONLY

pollutants, in limits not less than Two Million Dollars ($2,000,000). Contractor shall add the City and all parties required to be indemnified by Contractor as additional insured on all pollution liability policies. X POLLUTION COVERAGE IS NOT REQUIRED ON THIS PROJECT

7. **Higher Coverage Limits:** If Contractor maintains higher coverage limits than the amounts shown above, then the City requires and shall be entitled to coverage for the higher coverage limits maintained by Contractor. Any available insurance proceeds in excess of the specified minimum limits of insurance and coverage shall be available to the City.

8. **Claims Made Coverage:** Liability insurance coverage may not be written on a "claims made" or modified occurrence basis. The Certificate of Insurance must clearly provide that the coverage is on an "occurrence" basis.

5-1.24 **OTHER INSURANCE PROVISIONS.**

A. The requirements of the Standard Specifications as to types and limits of insurance coverage to be maintained by the Contractor, and any approval of insurance by the City, are not intended to, and shall not in any manner limit or qualify the liabilities and obligations otherwise assumed by the Contractor pursuant to the Contract, including, but not limited to, the provisions concerning indemnification, nor preclude the City from taking any other action available to it under any other provision of the Contract or law.

B. The City acknowledges that some insurance requirements contained in these Standard Specifications may be fulfilled by self-insurance on the part of the Contractor. However, this shall not in any way limit liabilities assumed by Contractor under the Contract. Any self-insurance must be approved in writing by the City, in its sole discretion and shall not reduce the limits of liability. Any deductibles or self-insured retentions ("SIR") must be declared on the certificate of insurance and approved by City in writing. Policies containing any

FOR COUNCIL APPROVAL ONLY

SIR provision shall provide or be endorsed to provide that the SIR may be satisfied by either the named insured or City. City reserves the right to obtain a full certified copy of any insurance policy and endorsements. The failure to exercise this right shall not constitute a waiver of such right.

C. The Contractor agrees to include in its contracts with all subcontractors the same requirements and provisions of this Contract, including the indemnity and insurance requirements, to the extent they apply to the scope of the subcontractor's work. Furthermore, the Contractor shall require its subcontractors to agree to be bound to the Contractor and the City in the same manner and to the same extent as the Contractor is bound to the City under this Contract. Additionally, the Contractor shall obligate its subcontractors to comply with these same provisions with respect to any tertiary subcontractor, regardless of tier. A copy of the City's indemnity and insurance provisions will be furnished to the subcontractor or tertiary subcontractor upon request. Alternatively, the Contractor may insure subcontractor(s) under its own policy.

D. The City, its officers, agents, employees, and volunteers are to be covered as insureds with respect to liability arising out of automobiles owned, leased, hired or borrowed by or on behalf of the Contractor; and with respect to liability arising out of work or operations performed by or on behalf of the Contractor including materials, parts or equipment furnished in connection with such work or operations. Coverage shall not extend to any indemnity coverage for the active negligence of the additional insured in any case where an agreement to indemnify the additional insured would be invalid under California Insurance Code Section 11580.04.

E. The limits of insurance required in this Contract may be satisfied by a combination of primary and excess insurance. Any excess insurance shall contain or be

FOR COUNCIL APPROVAL ONLY

endorsed to contain a provision that such coverage shall also apply on a primary and noncontributory basis for the benefit of the City (if agreed to in a written contract) before the City's own insurance shall be called upon to protect it as a named insured.

F. The insurance procured by Contractor shall be subject to the approval of the City, but any acceptance of insurance certificates by the City shall in no way limit or relieve Contractor of its duties and responsibilities under the Agreement.

G. Contractor shall be responsible for all premiums, deductibles, and self-insured retention applicable to the insurance it is required to procure under the Contract. All deductibles or self-insured retentions over five hundred thousand dollars ($500,000) must be approved by the City, in writing. Contractor shall be responsible for all deductibles, self-insured retention payments, and/or increased premiums incurred if the City's policies of insurance are forced to cover damages or respond to claims for which Contractor or its Subcontractors were obligated to provide insurance under the Contract.

H. Failure of the City to enforce in a timely manner any of the requirements of these insurance provisions shall not act as a waiver to enforcement of any of these provisions at a later date.

I. Contractor's indemnity obligations shall not be limited by these insurance provisions and shall survive the expiration of the Contract and the insurance provisions of the Contract shall likewise not be limited by the indemnity provisions of the Contract.

J. THE CITY RESERVES THE RIGHT TO WITHHOLD ANY PROGRESS PAYMENTS TO THE CONTRACTOR IN THE EVENT OF NONCOMPLIANCE WITH ANY INSURANCE REQUIREMENTS.

FOR COUNCIL APPROVAL ONLY

Bond No. _____
Premium $_____

PUBLIC WORKS
FAITHFUL PERFORMANCE BOND

(Project: _____)

WHEREAS, the City of Roseville ("CITY") has awarded a bid and contract to _____ as contractor ("PRINCIPAL") for the public work described as _____ _____ (the "WORK"). The contract ("AGREEMENT"), for the public work described above, and all of its terms and conditions are incorporated by reference and made a part hereof; and

WHEREAS, the PRINCIPAL is required to furnish a bond in connection with the AGREEMENT guaranteeing its faithful performance; and

NOW, THEREFORE, we the undersigned PRINCIPAL and _____ _____, a _____, admitted and duly authorized to transact business under the laws of the State of California, as SURETY ("SURETY"), are held and firmly bound unto the CITY or its successors and assigns in the sum of _____ dollars ($_____) (which amount is not less than 100% of the AGREEMENT price) to be paid to the CITY or its successors and assigns; and for which payment, well and truly to be made, we bind ourselves, our heirs, executors and administrators, successors or assigns jointly and severally, firmly by these presents.

The condition of this obligation is such that if the PRINCIPAL, or its heirs, executors, administrators, successors or assigns, shall abide by, and in all respects promptly and faithfully perform the covenants, conditions and provisions in said AGREEMENT and any alteration thereof made as therein provided, notice of which alterations to Surety being hereby waived, on its part to be kept and performed at the time and in the manner therein specified, and in all respects according to their true intent and meaning, and shall indemnify and save harmless CITY, its officers, agents, employees, volunteers as therein stipulated, then this obligation shall be null and void; otherwise, this obligation shall be and remain in full force and effect.

As condition precedent to the satisfactory completion of the contract, the obligation of the PRINCIPAL and SURETY under this Bond shall remain in effect for a period of one (1) year after the completion and acceptance of the WORK. During that time, if the PRINCIPAL, its heirs, executors, administrators, successors or assigns fails to make full, complete and satisfactory repair and replacement or totally protect the CITY from any loss or damage made evident during that year which results from or is caused by either defective materials or faulty workmanship in the prosecution of the WORK, then the obligation shall remain in full force and effect. However, anything in

FOR COUNCIL APPROVAL ONLY

this paragraph to the contrary notwithstanding, the obligation of the SURETY shall continue so long as any obligation of the PRINCIPAL remains.

No prepayment or delay in payments, and no change, extension, addition or alteration of any provision of the AGREEMENT or in the specifications agreed to between the PRINCIPAL and the CITY, or any forbearance on the part of the CITY shall operate to relieve the SURETY. The SURETY hereby waives the provisions of Section 2819 of the California Civil Code. The SURETY waives all rights of subrogation against the CITY or any person employed by the CITY. If the contract price increases by the issuance of change orders, the amount specified in this bond shall increase by the same amount.

Whenever PRINCIPAL shall be and declared by CITY to be in default under the AGREEMENT, SURETY shall promptly remedy the default, or shall promptly do one of the follow at CITY's election:

1. Undertake through its agents or independent contractors, reasonably acceptable to CITY, to complete the AGREEMENT in accordance with its terms and conditions and to pay and perform all obligations of PRINCIPAL under the AGREEMENT, including without limitation, all obligations with respect to warranties, guarantees, and the payment of liquidated damages.

2. Reimburse CITY for all costs CITY incurs in completing the AGREEMENT, and in correcting, repairing or replacing defects in materials or workmanship and/or materials and workmanship which do not conform to the specifications in the AGREEMENT.

SURETY's obligations hereunder are independent of the obligations of any other surety for the performance of the AGREEMENT, and suit may be brought against SURETY and such other sureties, jointly and severally, or against any one or more of them, or against less than all of them without impairing CITY's rights against the others.

No right of action shall accrue on this bond to or for the use of any person or corporation other than CITY or its successors or assigns.

As part of the obligation secured hereby and in addition to the face amount specified therefore, there shall be included costs and reasonable expenses and fees, including reasonable attorneys' fees, incurred by CITY in successfully enforcing such obligation, all to be taxed as costs and included in any judgment rendered.

[SIGNATURES NEXT PAGE]

FOR COUNCIL APPROVAL ONLY

IN WITNESS WHEREOF, this instrument has been duly executed by the PRINCIPAL and SURETY above-named, on the ____ day of _____, 20___.

PRINCIPAL:

BY:_____

PRINT NAME: _____

PRINT TITLE: _____

AND

BY: _____

PRINT NAME: _____

PRINT TITLE:_____

SURETY:

BY:_____

PRINT NAME: ____ _____

PRINT TITLE:_____

MAILING ADDRESS:

_____

_____

_____

(Notarization by Surety and copy of Power of Attorney required.)

APPROVED AS TO FORM:

BY: _____
City Attorney

FOR COUNCIL APPROVAL ONLY

Bond No. _____
Premium $_____

PUBLIC WORKS
LABOR AND MATERIALS PAYMENT BOND
(Project: _____)

WHEREAS, the City of Roseville ("CITY"), has awarded a bid and contract to _____ as contractor ("PRINCIPAL"), for the public work described as _____ _____ (the "WORK"). The contract ("AGREEMENT"), for the public work described above, and all of its terms and conditions are incorporated by reference and made a part hereof; and

WHEREAS, the PRINCIPAL is required to furnish a bond in connection with the AGREEMENT guaranteeing payment of persons who provide labor and material; and

NOW, THEREFORE, we the undersigned PRINCIPAL and _____ _____, a _____, admitted and duly authorized to transact business under the laws of the State of California, as SURETY ("SURETY"), are held and firmly bound unto the CITY or its successors and assigns in the sum of _____ dollars ($_____) (which amount is not less than 100% of the AGREEMENT price) to be paid to the CITY or its successors and assigns; and for which payment, well and truly to be made, we bind ourselves, our heirs, executors and administrators, successors or assigns jointly and severally, firmly by these presents.

The condition of the obligation is such that if the PRINCIPAL, its subcontractors, heirs, executors, administrators, successors or assigns fails to pay any of the persons named in Section 8004 or 9100 of the Civil Code of the State of California, or the amounts due under the Unemployment Insurance Code of the State of California, or any amounts required to be deducted, withheld and paid over to the Employment Development Department from the wages of employees of the PRINCIPAL and its subcontractors pursuant to Section 13020 of the Unemployment Insurance Code, with respect to work or labor performed by any such claimant, that the SURETY will pay for the same, in an amount not exceeding the sum specified in this bond, and also, in case suit is brought upon the bond, shall pay reasonable attorneys' fees, to be fixed by the Court.

This bond shall inure to the benefit of any and all persons, companies, and corporations entitled to file a Stop Payment Notice pursuant to the provisions of Section 9350 et seq. of the Civil Code of the State of California, so as to give a right of action to them or their assigns in any suit brought upon this bond.

FOR COUNCIL APPROVAL ONLY

No prepayment or delay in payments, and no change, extension, addition or alteration of any provision of the AGREEMENT or in the specifications agreed to between the PRINCIPAL and the CITY, or any forbearance on the part of the CITY shall operate to relieve the SURETY. The SURETY hereby waives the provisions of Section 2819 of the California Civil Code. The SURETY waives all rights of subrogation against the CITY or any person employed by the CITY. If the contract price increases by the issuance of change orders, the amount specified in this bond shall increase by the same amount.

As part of the obligation secured hereby and in addition to the face amount specified therefore, there shall be included costs and reasonable expenses and fees, including reasonable attorneys' fees, incurred by CITY in successfully enforcing such obligation, all to be taxed as costs and included in any judgment rendered.

IN WITNESS WHEREOF, this instrument has been duly executed by the PRINCIPAL and SURETY above-named, on the _____ day of _____, 20__.

FOR COUNCIL APPROVAL ONLY

PRINCIPAL:

BY:_____

PRINT NAME: _____

PRINT TITLE: _____

AND

BY: _____

PRINT NAME: _____

PRINT TITLE:_____

SURETY:

BY:_____

PRINT NAME: _____

PRINT TITLE:_____

MAILING ADDRESS:

_____

_____

_____

(Notarization by Surety and copy of Power of Attorney required.)

APPROVED AS TO FORM:

BY: _____
City Attorney

CITY OF ROSEVILLE

GENERAL CONDITIONS

FOR

BUILDINGS AND GROUNDS

FOR COUNCIL APPROVAL ONLY

CITY OF ROSEVILLE
GENERAL CONDITIONS
FOR
BUILDINGS AND GROUNDS

SECTION 1: DEFINITIONS AND TERMS GC-1:1

1-1.01	GENERAL	GC-1:1
1-1.02	ACCEPTANCE	GC-1:1
1-1.03	ADDENDUM	GC-1:1
1-1.04	AS-BUILT DOCUMENTS, AS-BUILT DRAWINGS AND RECORD DOCUMENTS	GC-1:1
1-1.05	ASSESSMENT	GC-1:1
1-1.06	BENEFICIAL OCCUPANCY	GC-1:2
1-1.07	BID GUARANTY	GC-1:2
1-1.08	BIDDER	GC-1:2
1-1.09	BIDDING DOCUMENTS	GC-1:2
1-1.10	CHANGE ORDER	GC-1:2
1-1.11	CITY	GC-1:2
1-1.12	CITY ATTORNEY	GC-1:2
1-1.13	CITY CLERK	GC-1:2
1-1.14	CLAIM	GC-1:2
1-1.15	CONSTRUCTION SCHEDULE	GC-1:3
1-1.16	CONTRACT OR AGREEMENT	GC-1:3
1-1.17	CONTRACT CONDITIONS	GC-1:3
1-1.18	CONTRACT DOCUMENTS	GC-1:3
1-1.19	CONTRACT DRAWINGS	GC-1:3
1-1.20	CONTRACT PRICE	GC-1:4
1-1.21	CONTRACT TIME	GC-1:4
1-1.22	CONTRACTOR	GC-1:4
1-1.23	DAY OR DAYS	GC-1:4
1-1.24	DEPARTMENT	GC-1:4
1-1.25	DIRECT COSTS	GC-1:4
1-1-26	DIRECTOR	GC-1:6
1-1.27	EMERGENCY.	GC-1:6
1-1.28	ENGINEER OR ARCHITECT	GC-1:7
1-1.29	FINAL COMPLETION	GC-1:7
1-1.30	FORCE ACCOUNT	GC-1:7
1-1.31	GENERAL NOTES	GC-1:7
1-1.32	INSTALLATION, INSTALL	GC-1:7
1-1.33	LABORATORY	GC-1:7
1-1.34	LEGAL HOLIDAYS	GC-1:7
1-1.35	LIQUIDATED DAMAGES	GC-1:7
1-1.36	NOTICE OF COMPLETION	GC-1:8
1-1.37	NOTICE TO PROCEED	GC-1:8
1-1.38	NOTICE OF TERMINATION	GC-1:8

FOR COUNCIL APPROVAL ONLY

1-1.39 OVERHEAD....GC-1:8
1-1.40 PREMISES....GC-1:9
1-1.41 PROFESSIONAL ENGINEER....GC-1:9
1-1.42 PROJECT MANUAL....GC-1:9
1-1.43 PROPOSAL FORMS....GC-1:9
1-1.44 REQUEST FOR INFORMATION (RFI)....GC-1:9
1-1.45 SAFETY....GC-1:9
1-1.46 SCHEDULE OF VALUES....GC-1:9
1-1.47 SHOP DRAWINGS....GC-1:10
1-1.48 SPECIFICATIONS....GC-1:10
1-1.49 SUBCONTRACTOR....GC-1:10
1-1.50 SUBMITTALS....GC-1:10
1-1.51 SUPPLEMENTAL CONDITIONS....GC-1:10
1-1.52 SUPPLIER....GC-1:10
1-1.53 WORK....GC-1:11
1-1.54 WORK SITE....GC-1:11
1-1.55 WORKING DRAWINGS....GC-1:11

SECTION 2: CONTROL AND SCOPE OF THE WORK....GC-2:1

2-1.01 AUTHORITY OF DIRECTOR....GC-2:1
2-1.02 INTENT OF CONTRACT DOCUMENTS....GC-2:1
2-1.03 EXAMINATION AND VERIFICATION OF CONTRACT DOCUMENTS....GC-2:2
2-1.04 CONTRACT DRAWINGS....GC-2:3
2-1.05 COORDINATION AND INTERPRETATION OF CONTRACT DOCUMENTS....GC-2:3
2-1.06 INDEPENDENT CONTRACTOR STATUS....GC-2:5
2-1.07 ORDER OF WORK....GC-2:5
2-1.08 SUBMITTALS....GC-2:5
2-1.08A SHOP DRAWINGS....GC-2:6
2-1.08B DESCRIPTIVE DATA....GC-2:7
2-1.08C SAMPLES....GC-2:7
2-1.08D MANUALS, INSTRUCTIONS AND AFFIDAVIT....GC-2:7
2-1.08E ALTERNATIVES....GC-2:10
2-1.09 DISPOSAL OF MATERIAL OUTSIDE THE WORK SITE....GC-2:12
2-1.10 ACCESS TO THE WORK....GC-2:12
2-1.11 TEMPORARY UTILITIES....GC-2:12
2-1.12 UTILITY FACILITIES....GC-2:13
2-1.13 PRESERVATION AND CLEANING....GC-2:14
2-1.14 LIMITATIONS ON WORK SITE AND PREMISES....GC-2:14
2-1.15 DUST CONTROL....GC-2:15
2-1.16 SANITATION....GC-2:15
2-1.17 NIGHT WORK AND NORMAL WORKING HOURS....GC-2:15
2-1.18 LINES AND GRADES....GC-2:16
2-1.19 ARCHEOLOGICAL DISCOVERIES....GC-2:17
2-1.20 PRESERVATION OF MONUMENTS....GC-2:17
2-1.21 CONFORMITY WITH CONTRACT DOCUMENTS....GC-2:18

FOR COUNCIL APPROVAL ONLY

2-1.22 FINAL CLEANUP GC-2:18
2-1.23 AS-BUILT DOCUMENTS AND DRAWINGS GC-2:18
2-1.24 SUPERINTENDENCE GC-2:19
2-1.25 CHARACTER OF WORKER GC-2:20
2-1.26 INSPECTION GC-2:20
2-1.27 REMOVAL OF REJECTED AND UNAUTHORIZED WORK GC-2:21

SECTION 3: CHANGES IN THE WORK GC-3:1

3-1.01 CHANGES GC-3:1
3-1.02 PROPOSED CHANGE ORDERS GC-3:2
3-1.03 EMERGENCY AND INDETERMINATE TYPE CHANGE ORDERS GC-3:3
3-1.04 EXECUTED CHANGE ORDER GC-3:3
3-1.05 CONTRACT PRICE ADJUSTMENT GC-3:3
3-1.06 FORCE ACCOUNT PAYMENT GC-3:5
***3-1.06A LABOR* GC-3:6**
***3-1.06B MATERIALS* GC-3:6**
***3-1.06C EQUIPMENT* GC-3:7**
***3-1.06D MARKUPS* GC-3:8**
***3-1.06E RECORDS* GC-3:9**
3-1.07 COST REDUCTION PROPOSALS GC-3:11

SECTION 4: CONTROL OF MATERIALS GC-4:1

4-1.01 MATERIALS GC-4:1
4-1.02 PRODUCT AND REFERENCE STANDARDS GC-4:2
4-1.03 SAMPLING AND TESTING OF MATERIALS GC-4:2
4-1.04 CERTIFICATES OF COMPLIANCE GC-4:7

SECTION 5: LEGAL RELATIONS AND RESPONSIBILITY GC-5:1

5-1.01 LAWS TO BE OBSERVED GC-5:1
5-1.02 HOURS OF LABOR GC-5:1
5-1.03 NONDISCRIMINATION GC-5:2
5-1.04 PREVAILING WAGE GC-5:3
5-1.05 REGISTRATION REQUIRED AS QUALIFICATION TO BID GC-5:6
5-1.06 PAYROLL RECORDS GC-5:7
5-1.07 SAFETY REQUIREMENTS GC-5:10
5-1.08 SUBSURFACE EXCAVATIONS, NOTIFICATION GC-5:15
5-1.09 PUBLIC SAFETY GC-5:15
5-1.10 EMERGENCIES GC-5:17
5-1.11 APPRENTICES GC-5:18
5-1.12 FAIR LABOR STANDARDS ACT GC-5:18
5-1.13 WORKERS' COMPENSATION GC-5:19
5-1.14 AIR POLLUTION CONTROL AND ASBESTOS GC-5:19
5-1.15 USE OF PESTICIDES GC-5:20
5-1.16 SOUND AND LIGHT CONTROL REQUIREMENTS GC-5:20
5-1.17 WEIGHT LIMITATIONS GC-5:21
5-1.18 ENVIRONMENTAL CLEARANCES; MITIGATION MONITORING PROGRAMS; AND REGULATORY AGENCY PERMIT

FOR COUNCIL APPROVAL ONLY

REQUIREMENTS GC-5:21
5-1.19 PERMITS AND LICENSES GC-5:21
5-1.20 WATER POLLUTION GC-5:22
5-1.21 PROTECTION AND USE OF PROPERTY GC-5:23
5-1.22 RESPONSIBILITY FOR DAMAGE AND INDEMNIFICATION GC-5:24
5-1.23 INSURANCE COVERAGE GC-5:26
5-1.24 OTHER INSURANCE PROVISIONS GC-5:31
5-1.25 THIRD PARTY BENEFICIARY GC-5:33
5-1.26 COORDINATION AND ACCESS GC-5:33
5-1.27 OCCUPANCY BY THE DEPARTMENT PRIOR TO ACCEPTANCE GC-5:34
5-1.28 RIGHT TO OPERATE UNSATISFACTORY FACILITIES AND EQUIPMENT GC-5:35
5-1.29 CONTRACTOR'S RESPONSIBILITY FOR THE WORK GC-5:36
5-1.30 RESPONSIBILITY FOR UTILITIES GC-5:37
5-1.31 PROPERTY RIGHTS IN MATERIALS GC-5:39
5-1.32 COURT ORDERED DELAY GC-5:39
5-1.33 NO PERSONAL LIABILITY GC-5:39
5-1.34 RIGHTS IN LAND AND IMPROVEMENTS GC-5:40
5-1.35 ANTITRUST CLAIMS GC-5:40
5-1.36 RIGHTS TO DRAWINGS, TECHNICAL DATA PATENTS GC-5:40
5-1.37 PAYMENT OF TAXES GC-5:41
5-1.38 GRATUITIES AND CONFLICT OF INTEREST GC-5:42
5-1.39 COOPERATION GC-5:43
5-1.40 DIGGING TRENCHES OR OTHER EXCAVATIONS GC-5:43
5-1.41 CONTRACTOR REGISTRATION GC-5:44
5-1.42 CITY OF ROSEVILLE ENCROACHMENT PERMITS AND RIGHTS-OF-WAY GC-5:45

SECTION 6: PROSECUTION AND PROGRESS GC-6:1

6-1.01 SUBLETTING AND SUBCONTRACTING GC-6:1
6-1.02 ASSIGNMENT GC-6:2
6-1.03 BEGINNING OF WORK GC-6:2
6-1.04 PROGRESS SCHEDULE. GC-6:3
6-1.05 SCHEDULE OF VALUES GC-6:9
6-1.06 CITY'S RIGHT TO STOP WORK GC-6:9
6-1.07 TIME OF COMPLETION GC-6:11
6-1.08 LIQUIDATED DAMAGES GC-6:12
6-1.09 DELAYS AND EXTENSIONS TO THE WORK GC-6:13
6-1.10 TERMINATION GC-6:18
6-1.10A TERMINATION OF AGREEMENT – CONVENIENCE OF CITY. GC-6:18
6-1.10B TERMINATION OF AGREEMENT - FOR CAUSE GC-6:21

SECTION 7: ACCEPTANCE AND PAYMENT GC-7:1

7-1.01 ACCEPTANCE GC-7:1
7-1.02 SCOPE OF PAYMENT GC-7:2
7-1.03 NOTICE OF POTENTIAL CLAIM GC-7:2
7-1.04 CLAIMS GC-7:5

FOR COUNCIL APPROVAL ONLY

7-1.05 DISPUTE RESOLUTION PROCEDURE GC-7:6
7-1.06 STOP PAYMENT NOTICES GC-7:7
7-1.07 PROGRESS PAYMENTS GC-7:7
7-1.08 PAYMENT FOR MATERIALS AND EQUIPMENT ON HAND GC-7:9
7-1.09 RETENTION ON PROGRESS PAYMENTS GC-7:11
7-1.10 FINAL PAYMENT GC-7:12
7-1.11 CLERICAL ERRORS GC-7:14
7-1.12 WARRANTY GC-7:14
7-1.13 WARRANTY OF TITLE GC-7:16

FOR COUNCIL APPROVAL ONLY

SECTION 1

DEFINITIONS AND TERMS

1-1.01 **GENERAL.** When the following abbreviations and terms or pronouns in place of them appear in the Contract Documents, the intent and meaning shall be interpreted as provided in this Section 1.

1-1.02 **ACCEPTANCE.** Formal Acceptance by resolution by the Roseville City Council of the Contract when completed in all respects in accordance with the Contract Documents and any modifications previously approved.

1-1.03 **ADDENDUM.** Written interpretation or revision to any of the Contract Documents issued by the City before the bid opening.

1-1.04 **AS-BUILT DOCUMENTS, AS-BUILT DRAWINGS AND RECORD DOCUMENTS.** As-Built Documents, As-Built Drawings and Record Documents are all contract documents modified to reflect changes during the construction phase. Specifically, As-Built Documents/Drawings are a revised set of drawings submitted by the Contractor upon Final Completion of a project. They reflect changes made in the Specifications and Working Drawings during the construction process, and show the exact dimensions, geometry, and location of all elements of the work completed under the Contract. Record Documents, on the other hand, are compiled by the Engineer or Architect based on the As-Built Documents/Drawings submitted by the Contractor. They reflect the Engineer or Architect's concurring review of what changes were denoted, why they were made and where they occurred and create a record set of drawings.

1-1.05 **ASSESSMENT.** A cost imposed on the Contractor for non-compliance

FOR COUNCIL APPROVAL ONLY

with certain contractual requirements.

1-1.06 **BENEFICIAL OCCUPANCY.** The taking possession of a portion of the Work by the City for its use and/or occupancy on other than a temporary or emergency basis.

1-1.07 **BID GUARANTY.** The cashier's, certified check, irrevocable standby letter of credit, deposit of securities, or Bidder's Bond, accompanying the bid submitted by the Bidder, as a guaranty that the Bidder will enter into an agreement with the City for the performance of the Work, if the Agreement is awarded to Bidder, and the Bidder will submit the required Contract Bonds and Certificate of Insurance. Also referred to as the Bidder's Security.

1-1.08 **BIDDER.** Individual, firm, partnership, limited liability company, corporation, joint venture, or any combination thereof, submitting a Proposal for the Work, acting directly, or through a duly authorized representative.

1-1.09 **BIDDING DOCUMENTS.** Includes the Notice to Bidders, Bidding Requirements, Contract Conditions, Drawings, and Addenda.

1-1.10 **CHANGE ORDER.** Any written order to the Contractor directing an addition, deletion, or modification of the Work, or an adjustment in the Contract Price or Contract Time provided in the Contract Documents and issued after the Agreement has been signed.

1-1.11 **CITY.** The City of Roseville.

1-1.12 **CITY ATTORNEY.** The City Attorney of the City.

1-1.13 **CITY CLERK.** The City Clerk of the City.

1-1.14 **CLAIM.** A separate demand by Contractor sent by registered mail or certified mail with return receipt requested, for one or more of the following: (a) a time extension, including, without limitation, for relief for damages or penalties for delay assessed by

FOR COUNCIL APPROVAL ONLY

the City; (b) payment by the City of money or damages arising from work done by, or on behalf of, Contractor pursuant to the Contract Documents and payment for which is not otherwise expressly provided or to which Contractor is not otherwise entitled; and (c) payment of an amount that is disputed by the City.

1-1.15 **CONSTRUCTION SCHEDULE.** A list or graphic display of construction activities required for completing the Work, in a format required by the Contract Documents. The duration, start and finish date, and sequence of significant activities, critical path, float and milestones must be indicated in the Construction Schedule.

1-1.16 **CONTRACT OR AGREEMENT.** The written agreement relating to the Work to be performed, the labor, materials, and equipment to be furnished, and the payment to be made therefor. The Agreement/Contract is part of and incorporates all of the Contract Documents.

1-1.17 **CONTRACT CONDITIONS.** Includes the General Conditions, Supplemental Conditions, and Specifications.

1-1.18 **CONTRACT DOCUMENTS.** Includes those documents that form the basis of the Contract, including but not limited to, Bidding Documents, the Bid or Proposal, Contract Bonds, the Contract, all required insurance certificates or endorsements, all bonds, all required certifications or statements, Change Orders, any Contract Amendment, any City Standard which is incorporated by reference and these City of Roseville General Conditions for Buildings and Grounds.

1-1.19 **CONTRACT DRAWINGS.** The official drawings including plans, elevations, sections, detail drawings, diagrams, plated, General Notes, information and schedules thereon, or exact reproductions thereof, showing the location, character, dimension, and details

FOR COUNCIL APPROVAL ONLY

of the Work. The Contract Drawings include any drawings or plates bound within the Supplemental Conditions.

1-1.20 **CONTRACT PRICE.** The total compensation to be paid to the Contractor in accordance with the terms of the Agreement.

1-1.21 **CONTRACT TIME.** The number of Days, or portion thereof, allowed for completion of the Work, including all authorized time extensions. The effective date for commencement of the Work specified in the Notice to Proceed shall define the beginning of the Contract Time.

1-1.22 **CONTRACTOR.** Individual, firm, partnership, limited liability company, corporation, joint venture, or any combination thereof, who has entered into the Agreement with City.

1-1.23 **DAY OR DAYS.** Unless otherwise designated, Day or Days as used in the Contract Documents will be understood to mean calendar Day or Days.

1-1.24 **DEPARTMENT.** The Department for Contract Administration, as identified in the Supplemental Conditions.

1-1.25 **DIRECT COSTS.** Those cost items (including labor, materials, equipment and any subcontractor's work) that are used in the actual performance of, and are specifically and uniquely attributable to the Work or changed Work. Direct Costs do not include Overhead. Direct Costs only include the following:

A. Payroll costs for employees in the direct employ of Contractor in the performance of the Work under schedules of job classifications agreed upon by City and Contractor. Payroll costs for employees not employed full time on the Work shall be apportioned on the basis of their time spent on the Work. Payroll costs shall include salaries and

FOR COUNCIL APPROVAL ONLY

wages plus the cost of fringe benefits which shall include social security contributions, unemployment, excise and payroll taxes, workers' compensation, health and retirement benefits, sick leave, vacation and holiday pay applicable thereto. Such employees may include superintendents and foremen at the site. The expenses of performing work after regular working hours, on Saturday, Sunday or legal holidays shall be included in the above only to the extent authorized by City in writing.

B. Cost of all materials and equipment furnished and incorporated in the Work, including costs of transportation and storage thereof, and suppliers' field services required in connection therewith. All trade discounts, rebates and refunds and all returns from sale of surplus materials and equipment shall accrue to City, and Contractor shall make provisions so that they may be obtained.

C. Payments made by Contractor to the subcontractors for work performed by subcontractors. If required by City, Contractor shall obtain competitive bids from subcontractors acceptable to Contractor and shall deliver such bids to City who will then determine which bids will be accepted. If a subcontract provides that the subcontractor is to be paid on the basis of cost of the work plus a fee, the subcontractor's cost of the work shall be determined in the same manner as Contractor's cost of the work. All subcontracts shall be subject to the other provisions of the Contract Documents insofar as applicable.

D. Costs of special consultants (including engineers, architects, testing laboratories, surveyors, and accountants) employed for services specifically, and only, related to the Work.

E. Supplemental costs including the following:

1. The proportion of necessary transportation, travel and subsistence

FOR COUNCIL APPROVAL ONLY

expenses of Contractor's employees incurred in discharge of duties connected with the Work.

2. Cost, including transportation and maintenance, of all materials, supplies, equipment, machinery, appliances, office and temporary facilities at the site and hand tools not owned by the workers, which are consumed in the performance of the Work, and cost, less market value of such items used but not consumed which remain the property of Contractor.

3. Rentals of all construction equipment and machinery and the parts thereof whether rented from Contractor or others in accordance with rental agreements approved by City, and the costs of transportation, loading, unloading, installation, dismantling and removal thereof, all in accordance with terms of said rental agreements. The rental of any such equipment, machinery or parts shall cease when the use thereof is no longer necessary for the Work.

4. Sales, consumer, use or similar taxes related to the Work, and for which Contractor is liable, imposed by laws and regulations.

5. The cost of utilities (including the meter and all associated installation costs), fuel and sanitary facilities at the site.

6. Cost of premiums for additional bonds and insurance required because of changes in the Work.

1-1-26 **DIRECTOR.** Director of the Department for Contract Administration or his or her designee.

1-1.27 **EMERGENCY.** Any sudden generally unforeseen occurrence (such as a fire, flood, storm, earthquake, civil disorder, or other natural and/or man-made disaster) that has the potential to adversely affect the safety of life, the Work, and/or adjacent property; to interrupt contracts essential to the performance of the Work; and/or to cause catastrophic failure of City

FOR COUNCIL APPROVAL ONLY

equipment and/or facilities.

1-1.28 **ENGINEER OR ARCHITECT.** Professional Engineer or Architect designated for a particular project responsible for signing and sealing the permit drawings, interpretation of the drawings where ambiguities exist, review of requests for information, design Change requests and Shop Drawings, resolution of errors and omissions, and finalization of Record Documents.

1-1.29 **FINAL COMPLETION.** When the project has been completed according to the terms and conditions set forth in the Contract Documents. Final Completion is not the same as Acceptance.

1-1.30 **FORCE ACCOUNT.** Payment by force account shall mean payment on the basis of the Contractor's time and materials.

1-1.31 **GENERAL NOTES.** The written instructions, provisions, conditions or other requirements appearing on the Contract Drawings and so identified thereon, which pertain to the performance of the Work.

1-1.32 **INSTALLATION, INSTALL.** Completely assembling, erecting, and/or connecting materials, parts, components, supplies, and related equipment specified or required for the completion of the Work.

1-1.33 **LABORATORY.** Established professional laboratories authorized by the City to test materials and Work involved in the Contract.

1-1.34 **LEGAL HOLIDAYS.** Those days designated as Federal holidays or declared by the City, or otherwise specified in the Contract Documents.

1-1.35 **LIQUIDATED DAMAGES.** The amount prescribed in the Contract Documents to be paid to the City or to be deducted from any payments due or to become due the

FOR COUNCIL APPROVAL ONLY

Contractor for each day's delay in completing the whole or any specified portion of the Work beyond the time allowed in the Supplemental Conditions.

1-1.36 **NOTICE OF COMPLETION.** A legal notice filed by the City with the Placer County Recorder's Office stating that construction has been completed and accepted by the City.

1-1.37 **NOTICE TO PROCEED.** A written notice given by the City to the Contractor fixing the date on which the Contract Time will commence to run.

1-1.38 **NOTICE OF TERMINATION.** Written notice from the City to the Contractor and/or its Surety terminating the Agreement, or a portion thereof, either for convenience of the City or for default due to the Contractor's failure to perform its contractual obligations.

1-1.39 **OVERHEAD.** Business or administrative expenses (including but not limited to office expenses, administrative staff, rent, insurance, utilities) not chargeable to a particular part of the Work. The term "Overhead" shall include all of the following:

A. Payroll costs and other compensation of Contractor's officers, executives, principals (of partnerships and sole proprietorships), general managers, engineers, architects, estimators, attorneys, auditors, accountants, purchasing and contracting agents, expediters, timekeepers, clerks, and other personnel employed by Contractor whether at the Work Site or in Contractor's principal or a branch office for general administration of the Work and not specifically included in the agreed upon schedule of job classifications, all of which are to be considered administrative costs covered by the Contractor's fee.

B. Expenses of Contractor's principal and branch offices other than Contractor's office at the site.

FOR COUNCIL APPROVAL ONLY

C. Any part of Contractor's capital expenses, including interest on Contractor's capital employed for the Work and charges against Contractor for delinquent payments.

D. Cost of premiums for all bonds and for all insurance whether or not Contractor is required by the Contract Documents to purchase and maintain the same, except as provided in section 1-1.25.

E. Other overhead or general expense costs of any kind.

1-1.40 **PREMISES.** Shall mean the area within construction easements, easements, rights of entry and City owned property which surrounds the Work Site, limited by the property lines thereof. In some cases Premises may coincide with the Work Site.

1-1.41 **PROFESSIONAL ENGINEER.** An engineer licensed by the Board of Registration for Professional Engineers, State of California.

1-1.42 **PROJECT MANUAL.** A book containing all Contract Documents.

1-1.43 **PROPOSAL FORMS.** The approved forms upon which the City requires that each Bidder submit its bid with regard to the Agreement.

1-1.44 **REQUEST FOR INFORMATION (RFI).** A document issued by the Contractor requesting information concerning the Contract Documents.

1-1.45 **SAFETY.** Includes the practice of identifying potential hazards, assessing their risk, taking corrective action where possible, including and providing control measures such as engineering design, written procedures, and the personal protective equipment for workers in order to eliminate or reduce the risk for exposure in the workplace.

1-1.46 **SCHEDULE OF VALUES.** The breakdown of the Contract Price that will serve as the basis for Contractor's Applications of Payment. Any lump sum bid item

FOR COUNCIL APPROVAL ONLY

included within the Contract Price will be apportioned among values relating to specific components of the Work covered by said lump sum.

1-1.47 **SHOP DRAWINGS.** Drawings, plans, diagrams, schedules, and other data specifically prepared and submitted to the City by the Contractor, showing in detail: (a) the proposed fabrication and assembly of a special component of the Work; and (b) the Installation (form, fit and attachment details) of a special component of the Work. Shop Drawings shall be deemed to include Working Drawings, Product Data, literature, and applicable performance and test data.

1-1.48 **SPECIFICATIONS.** The technical Specifications for the Work prepared by the Director or an Engineer or Architect describing in detail the nature of the Work, its components, any performance standards, and how the Work is to be constructed.

1-1.49 **SUBCONTRACTOR.** Any individual, firm, partnership, limited liability company, corporation, joint venture, or combination thereof, other than employees of the Contractor, engaged by the Contractor to furnish services, labor, equipment and materials for a portion of the Work.

1-1.50 **SUBMITTALS.** Those documents required to be submitted by the Contractor for review by the City in accordance with the Contract Documents.

1-1.51 **SUPPLEMENTAL CONDITIONS.** The Supplemental Conditions are specific clauses modifying or supplementing these General Conditions.

1-1.52 **SUPPLIER.** Any individual, firm, partnership, limited liability company, corporation, joint venture, or combination thereof, other than employees of the Contractor, that supplies a tangible product as a portion of the Work, with services usually limited to delivery and/or required testing, and with manufacturing, fabrication, or production facilities located off

FOR COUNCIL APPROVAL ONLY

the Work Site.

1-1.53 **WORK.** The furnishing of all labor, and the furnishing and Installing of all materials, articles, supplies and equipment as specified, designated, or required by the Contract Documents.

1-1.54 **WORK SITE.** All or portion of the Premises that the Work is limited to as shown on the Contract Drawings or designated by the Director. Public streets are not included unless Work is being done within the street right-of-way.

1-1.55 **WORKING DRAWINGS.** Original drawings prepared by the Contractor and/or its Subcontractors or Suppliers, of any tier, illustrating Work required for construction that will not become an integral part of the completed Work. This includes, but is not limited to, drawings for temporary structures such as decking, bulkheads, excavation supports, utility support, groundwater control, forming, falsework, access roads, staging areas, staging plans, and diversion plans. A Working Drawing is one type of a Shop Drawing.

FOR COUNCIL APPROVAL ONLY

SECTION 2

CONTROL AND SCOPE OF THE WORK

2-1.01 **AUTHORITY OF DIRECTOR.** The Contract shall be performed in a manner satisfactory to the Director who shall decide all questions which may arise as to the quality or acceptability of materials furnished and Work performed and as to the manner of performance and rate of progress of the Work; all questions which may arise as to the interpretation of the Contract Documents; all questions as to the acceptable fulfillment of the Contract on the part of the Contractor; and all questions as to compensation. The Director shall have authority to enforce and make effective such decisions and orders in the event the Contractor fails to promptly carry out the same.

2-1.02 **INTENT OF CONTRACT DOCUMENTS.** The Contract Documents are complementary, and what is called for by one shall be as binding as if called for by all. The intent of the Contract Documents is to describe the details for the construction and completion of the Work. Where the Contract Documents describe portions of the Work in general terms, but not in complete detail, it is understood that only the best general practice shall be followed and that only materials and workmanship of the best quality are to be used. Any Work, materials, or equipment that are customarily provided, or that are reasonably inferable from the Contract Documents as being required to produce the intended result, shall be supplied, whether or not specifically called for. When words, which have a well-known technical or trade meaning are used to describe work, materials, or equipment, such words shall be interpreted in accordance with that meaning. Unless otherwise specified, the Contractor shall furnish all labor, materials, tools, equipment, and incidentals, and do all the Work involved in executing the Contract in a

FOR COUNCIL APPROVAL ONLY

satisfactory and workmanlike manner.

Reference to standard specifications, manuals or codes of any technical society, organization or association, or to the laws or regulations of any governmental authority, whether such reference be specific or by implication, shall mean the latest standard specification, manual, code, laws, or regulations in effect on the first published date of the Notice to Contractors, except as may be otherwise specifically stated. However, no provision of any referenced standard specification, manual or code (whether or not specifically incorporated by reference in the Contract Documents) shall be effective to change the duties and responsibilities of City or Contractor, or any of their consultants, agents, or employees from those set forth in the Contract Documents, nor shall it be effective to assign to City, or City's designated representative, any duty or authority to supervise or direct the furnishing or performance of the Work or any duty or authority to undertake responsibility contrary to other provisions of the Contract Documents.

The Contract Documents are divided into parts, divisions, sections and articles for convenience, organization and reference. Generally, there has been no attempt to divide the Specifications sections into work performed by the various building trades, work by separate Subcontractors, or work required for separate facilities in the project.

2-1.03 **EXAMINATION AND VERIFICATION OF CONTRACT DOCUMENTS.** The Contractor shall thoroughly examine and become familiar with all of the various parts of the Contract Documents and shall determine the nature and location of the Work, the general and local conditions (including applicable laws) and all other matters which can in any way affect the cost, progress or performance of the Work under this Agreement. Failure to make an examination necessary for this determination shall not release the Contractor from the obligations of the Agreement. No oral agreement or conversation with any officer, or employee

FOR COUNCIL APPROVAL ONLY

of the City, or with the City's designated representative either before or after the execution of the Agreement, shall affect or modify any of the terms or obligations contained in the Contract Documents.

2-1.04 **CONTRACT DRAWINGS.** The Contract Drawings consist of general drawings and show such plans, elevations, sections, details and schedules as are necessary to give a graphic and pictorial description of the contemplated construction. All authorized alterations affecting the requirements and information given on the Contract Drawings shall be in writing.

2-1.05 **COORDINATION AND INTERPRETATION OF CONTRACT DOCUMENTS.** All Contract Documents are essential parts of the Contract, and a requirement occurring in one is as binding as though occurring in all. They are intended to be complementary, and to describe and provide for a complete Work.

In the event of inconsistencies between requirements contained in different components of the Contract Documents, the precedence of the Contract Documents shall be as follows to resolve conflicts:

1. Change Orders
2. The Contract (including Addenda)
3. The Supplemental Conditions
4. Specifications
5. Contract Drawings
6. The General Conditions

Should it appear that the Work to be done or any of the matters relative thereto are not sufficiently detailed or explained in the Contract Documents, the Contractor shall submit a

FOR COUNCIL APPROVAL ONLY

Request for Information ("RFI") to the Director for such further explanations as may be necessary and shall conform to the written explanation given as if part of the Contract Documents. The decisions of the Director shall be final.

Contractor shall anticipate that it will be necessary to prepare and submit RFIs regarding the Contract Documents. The City will respond to each RFI by no later than fourteen (14) Days after receipt of the RFI, unless the RFI is of significant complexity. Furthermore, in the event that there are numerous RFIs pending, Contractor shall cooperate with the City in establishing a priority for responding to the RFIs, and potentially some RFIs may be responded to beyond the fourteen (14) Day period.

Each RFI prepared by Contractor shall be full and complete. Contractor shall prepare RFIs so as to not cause any delay to the progress of the Work and to not cause any impact to Contractor's labor productivity in the field. Contractor shall not assert any Claims for delay or interference against the City if Contractor fails to timely submit any RFI to the City, after consideration of the response period allowed for by the City.

The response to an RFI shall not, by itself, constitute a writing that authorizes Contractor to perform any Work that causes an adjustment to either the Contract Price or the Contract Time. If Contractor believes that any response to any RFI should constitute a compensable change, Contractor shall provide a Notice of Potential Claim as provided in Section 7-1.03, below. Contractor's failure to provide the required written notice shall constitute a waiver of the Contractor's right to seek a compensable change based on the RFI response.

The Contractor shall examine all Contract Documents; shall verify all figures in the Contract Documents before laying out the Work; shall promptly notify the City of all errors, inconsistencies, and/or omissions that it discovers; and, in instances where such non-

FOR COUNCIL APPROVAL ONLY

conformities are discovered, shall obtain specific instructions in writing from the City before proceeding with the Work. Contractor's performance of any Work affected by such non-conformities prior to the City's decision shall be at the Contractor's risk. Any Work that is customarily provided or that is reasonably inferable shall not relieve the Contractor from performing such work at no additional expense and/or delay, and such Work shall be performed as if fully set forth in the Contract Documents.

2-1.06 **INDEPENDENT CONTRACTOR STATUS.** The Contractor shall independently perform all Work required by the Contract Documents and shall not be considered as an agent or employee of the City, nor shall the Contractor's Subcontractors or employees be considered as subagents of the City.

The Contractor and Contractor's Subcontractors shall be licensed in accordance with the laws of the State of California and as more particularly described in the bidding documents or elsewhere in the Contract Documents.

2-1.07 **ORDER OF WORK.** When required by the Contract Documents, the Contractor shall follow the sequence of operations set forth therein. Full compensation for conforming to such requirements will be considered as included in the prices paid for the various Contract items of work, and no additional compensation will be allowed therefor.

2-1.08 **SUBMITTALS.** It shall be the Contractor's responsibility to timely submit, so as to cause no delay in the Work, all Shop Drawings, descriptive data, manuals, instructions, affidavits, samples for the various trades as required by the Supplemental Conditions and Specifications, and offers of alternatives, if any. Such Submittals shall be checked and coordinated by the Contractor with the Work of other trades involved before they are submitted to the Director for examination.

FOR COUNCIL APPROVAL ONLY

The Contractor shall deliver at least one (1) electronic copy of the Submittals to the Director, and one (1) hard copy if requested. Work requiring the submittal of working drawings, descriptive data or samples shall not begin prior to approval of said Submittal by the Director.

The time allowed for review of each Submittal will be as indicated in the Supplemental Conditions. Review time will start upon receipt of the Submittal by the Director and will end upon the Director's mailing of the Submittals to the Contractor. Defective, incomplete or partial Submittals will be returned to the Contractor unreviewed.

Submittals shall be made by a letter of transmittal that shall contain a list of all matter submitted and identification of all variations from the Contract Documents contained in the Submittal. The letter and all items accompanying the same shall be fully identified as to project name and location, Contractor's name, district, county, and Contract number, with ample cross-references to the Contract Documents, to facilitate identification of items and their location in the Work.

All Shop Drawings and supporting data, catalogs, schedules, shall be submitted as the instruments of the Contractor, who shall be responsible for their accuracy and completeness. These Submittals may be prepared by the Contractor, Subcontractors, or Suppliers, but the Contractor shall ascertain that Submittals meet all of the requirements of the Contract Documents, while conforming to structural, space, and access conditions at the point of Installation. The Contractor shall check all Submittals before submitting them to the Director.

2-1.08A **SHOP DRAWINGS.** The Contractor shall submit an electronic copy (searchable PDF) of all Shop Drawings required by the Supplemental Conditions or Specifications, and one (1) hard copy, if requested by the Director. Shop Drawings shall also be provided separately in AutoCAD format using the latest version of AutoCAD. An electronic

FOR COUNCIL APPROVAL ONLY

copy will be returned to the Contractor either approved for use, as demonstrated by a stamp, or returned for correction and resubmittal. Materials, colors and/or samples will not be returned to the Contractor. Shop Drawings include any drawing, which requires execution by a draftsman as distinguished from printed matter. The size of Shop Drawings shall not exceed twenty-four inches (24") by thirty-six inches (36").

2-1.08B **DESCRIPTIVE DATA.** The Contractor shall submit an electronic copy (searchable PDF) of each set of manufacturer's brochures or other data required by the Supplemental Conditions or Specifications, and one (1) hard copy, if requested by the Director. The City will examine such Submittals and return either an electronic copy or a hard copy approved for use or returned for correction and resubmittal.

2-1.08C **SAMPLES.** The Contractor shall submit samples of articles, materials or equipment as required by the Supplemental Conditions or Specifications. The Work shall be in accordance with the approved samples. Samples shall be removed from City property when directed or may be incorporated in the Work if approved by the Director. Samples not removed by the Contractor will become the property of the City or, at the City's option, will be removed or disposed of by the City at the Contractor's expense.

2-1.08D **MANUALS, INSTRUCTIONS AND AFFIDAVIT.**

A. Manuals and Instructions. Where operation and maintenance manuals are required by the Supplemental Conditions, the Contractor shall submit two (2) sets of manuals, suitably bound, along with two (2) electronic copies in an approved format, to the Director within forty-five (45) Days after favorable review of the equipment or facilities. If operation and maintenance manuals are approved to be provided in PDF format, text shall be provided in searchable PDF format, making proper use of PDF for headings and heading levels,

FOR COUNCIL APPROVAL ONLY

paragraphs, tables, and lists. Submitted operation and maintenance manuals shall be a collected, organized, and indexed set of bookmarked PDF documents comprising each operation and maintenance manual that corresponds to a hardcopy binder. All manuals shall be marked to indicate the specific equipment furnished for this project and shall include at a minimum:

1. Equipment summary form
2. Cover/Title page
3. Table of contents
4. Operating procedures including start-up, shutdown, normal operation, all operating modes, emergency shutdown, and safety precautions
5. Lubrication instructions (if required)
6. Preventative maintenance procedures
7. Troubleshooting and corrective maintenance procedures
8. Reinstallation instructions
9. Overhaul instructions (if applicable)
10. Parts identification list with exploded view and associated cross references
11. Recommended spare parts list
12. Operator safety requirements
13. Electrical and control system wiring drawings, including panel wiring control (ladder) diagrams, logic diagrams, loop diagrams, and interconnection diagrams
14. Panel layout and assembly drawings

FOR COUNCIL APPROVAL ONLY

15. Mechanical drawings

16. Printouts of all software programs and configuration files

17. Factory and field test procedures and results

Operation and maintenance manuals for complex equipment shall also include:

18. Alternate specified operating modes

19. Emergency shutdown instructions

20. Normal shutdown instructions

21. Long term shutdown instructions

Operation and maintenance manuals for systems comprised of separate pieces of equipment shall include a system explanation of items 4, 7, 18, 19, 20, and 21 as well as the instructions for the separate pieces of equipment.

B. Affidavits. Where required in the Supplemental Conditions or Specifications, manufacturers of equipment shall provide field service as a part of this project. Equipment shall not be considered ready for full time operation until after the authorized factory-trained and qualified manufacturer's representative for the specific equipment has checked and adjusted the equipment and certified by written affidavit that the equipment has been properly Installed, tested, adjusted, lubricated, and calibrated, and is ready for full time operation. Acceptable affidavits shall be submitted prior to completion of the Work. Affidavits shall contain the following specific wording:

"The (Name of Equipment) has been properly installed, tested, adjusted, lubricated, and calibrated, and is ready for full time operation. The installation has been inspected and has been found to be in conformance with our (the manufacturer's) standards and requirements."

FOR COUNCIL APPROVAL ONLY

No amplification, dilution, or modification of this specific wording will be permitted.

2-1.08E **ALTERNATIVES.** For convenience in designation in the Contract Documents, certain materials, articles, or equipment may be designated by a brand or a trade name or the name of the manufacturer together with catalog designation or other identifying information, hereinafter referred to generically as "designated by brand name." Except in those instances where the product is designated to match others in use in a particular improvement, either completed or in the course of completion, an alternative material, article, or equipment which is of equal quality and of the required characteristics for the purpose intended may be proposed for use provided the Contractor complies with the following requirements:

A. The Contractor shall submit its proposal for an alternative in writing. Such request shall be made in ample time to permit review and approval without delaying the Work. The Contractor shall not be entitled to an adjustment of the Contract Time or an increase in the Contract Price based on any Contractor-proposed substitution.

B. No such proposal will be considered unless accompanied by complete information and descriptive data, necessary to determine the equality of the offered materials. The Contractor shall satisfy the Director as to the comparative quality, suitability, or performance of the offered material, articles, or equipment. In the event that the Director rejects the use of such alternative materials, articles, or equipment, then one of the particular products designated by brand name shall be furnished.

C. The burden of proof as to the quality and suitability of alternatives shall be upon the Contractor and it shall furnish all information necessary as required by the Director. The Director shall be the sole judge as to the quality and suitability of alternative articles or materials and such decisions shall be final. Where use of an alternative material

FOR COUNCIL APPROVAL ONLY

involves redesign of, or changes to, other parts of the Work, the cost and time required to effect such redesign or changes will be considered in evaluating the suitability of the alternative material. Cost of redesign by the City will be borne by the Contractor.

D. Whenever classification, rating or other certification by a body such as Underwriters Laboratories (UL) or the National Electrical Manufacturers Association (NEMA) is a part of the specification for any material, Contractor's request for use of alternative articles or materials shall be accompanied by reports from the listed or equivalent independent testing Laboratory indicating compliance with the Contract Documents. The cost of all testing required to prove equality of the material proposed shall be borne by the Contractor. Approval of an alternative shall be only for the characteristics or use named in such approval, and shall not be used to change or modify any requirement of the Contract Documents.

E. At its election, the City reserves the right to consider any Contractor proposed substitution as a Cost Reduction Proposal under Section 3-1.07 of these General Conditions in the event that there is a significant savings resulting from the substitution.

The Director will examine, with reasonable promptness, such Submittals, and return of Submittals to the Contractor shall not relieve the Contractor from responsibility for deviations and alternatives from the Contract Documents, nor shall it relieve the Contractor from responsibility for errors in the Submittals. A failure by the Contractor to identify in its letter of transmittal material deviations from the Contract Documents shall void the Submittal and any action taken thereon by the Director. When specifically requested by the Director, the Contractor shall resubmit such Shop Drawings, descriptive data and samples as may be required.

If any mechanical, electrical, structural, or other changes are required for the proper Installation and fit of alternative materials, articles, or equipment, or because of deviations from

FOR COUNCIL APPROVAL ONLY

the Contract, such changes shall not be made without the approval of the Director and shall be made without additional cost to the City.

2-1.09 **DISPOSAL OF MATERIAL OUTSIDE THE WORK SITE.** Unless otherwise stated elsewhere in the Contract Documents, the Contractor shall, at its own cost and expense, make its own arrangements for disposing of materials outside the Work Site.

Except when material is to be disposed of at a landfill or recycling center, when any material is to be disposed of outside the Work Site, the Contractor shall first obtain written permission from the City to dispose of the material at the intended location. The City's approval will be contingent upon the Contractor obtaining a written permit from the property owner on whose property the disposal is to be made. Prior to the disposal of any material at the intended location, the Contractor shall submit such permit or a certified copy thereof to the City, together with a written release from the property owner absolving the City from any and all responsibility related to the disposal of material on said property.

Disposal of Hazardous Materials must be done in accordance with all laws and regulations. Copies of all required regulatory documentation including copies of final manifests shall be supplied to the City.

2-1.10 **ACCESS TO THE WORK.** The Contractor shall satisfy itself that the jurisdictions through which its operations and haul routes pass will permit such operations with respect to the type of vehicle, laden weights, frequency and dimensions of loads, hours of operation and required traffic control. All necessary permits, licenses or bonds shall be obtained and paid for by the Contractor.

2-1.11 **TEMPORARY UTILITIES.** The Contractor shall make its own arrangements with utility companies for any temporary services it may require in performance of

FOR COUNCIL APPROVAL ONLY

the Work and shall pay all costs of these services directly to these utility organizations.

2-1.12 **UTILITY FACILITIES.** The Contractor shall protect from damage those utility facilities that are to remain in place, be Installed, relocated or otherwise arranged.

The Contractor's attention is directed to the possible existence of facilities not shown, and of facilities in a location different from that, which is indicated. The Contractor shall take steps to ascertain the exact location of all facilities prior to doing any Work, which may damage such facilities or interfere with their service. Where the location of a facility is indicated or inferred from the presence of visible facilities such as buildings, meters, and junction boxes, the Contractor shall make such excavations and explorations as are necessary to ascertain the correct location. Unless provided for elsewhere in the Contract Documents, the cost of such excavations and explorations will be considered as a part of the cost of other items of Work and no additional payment will be made. Such excavations and exploratory Work shall not entitle the Contractor to an extension of time.

If the Contractor discovers underground facilities not indicated or inferred from the Contract Documents, the Contractor shall immediately give the Director written notification of the existence of those facilities. The Contractor shall determine the exact location of the underground facilities and the cost of the work will be paid for in accordance with the Contract Documents. The underground facilities shall be protected from damage as directed by the Director and the cost of that work will be paid for as extra work. The Contractor shall, if directed by the Director, repair any damage, which may occur to the underground facilities. The cost of that repair work, not due to the failure of the Contractor to exercise reasonable care, will be paid for as extra work. Damage due to the Contractor's failure to exercise reasonable care shall be repaired at the Contractor's cost and expense.

FOR COUNCIL APPROVAL ONLY

Where it is determined by the City that the rearrangement of an underground facility, the existence of which is not shown on the Contract Drawings, is essential in order to accommodate the Work, the City will provide for the rearrangement of such facility by other forces or, when so ordered by Change Order, such rearrangement shall be performed by the Contractor and will be paid for as provided under a Change Order.

The Contractor shall be responsible for the maintenance of all utility facilities placed by the Contractor in temporary locations, and all utilities within the construction area not required to be relocated but which are required to be shored or supported during the construction period. The cost of such maintenance shall be borne by the Contractor, and no other compensation shall be due the Contractor for this Work.

The cost of providing and maintaining all necessary or required temporary structures, of making any necessary repairs, replacements, or similar operations, or furnishing indemnity or other bonds, if required, and all costs required by this Section shall be paid by the Contractor and shall be included in the prices bid in the schedule for other items of work.

2-1.13 **PRESERVATION AND CLEANING.** The Contractor shall clean up the Work at frequent intervals and at other times when directed by the Director. While finish Work is being accomplished, floors, Work areas and finished areas shall be kept clean, free of dust, construction debris and trash. Upon completion of the Work, the Contractor shall remove from the Premises its construction equipment and any waste materials not previously disposed of, leaving the Premises thoroughly clean and ready for final inspection.

2-1.14 **LIMITATIONS ON WORK SITE AND PREMISES.** The Contractor shall limit its construction operations to the Work Site unless otherwise shown on the Contract Drawings or specified. The Contractor shall perform no operation of any nature over or on the

FOR COUNCIL APPROVAL ONLY

Premises except such operations as are authorized by the Contract Documents or as authorized by the Director.

2-1.15 **DUST CONTROL.** During the performance of all Work under this Contract, the Contractor shall assume all responsibility for dust control and shall furnish all labor, equipment, and means required to carry out proper and efficient measures wherever and whenever dust control is necessary to prevent the operations from producing dust damage and nuisance to persons and property. Any claims resulting from dust damage or nuisance shall be borne solely by the Contractor. The Contractor shall comply with all applicable Air Quality Act requirements.

2-1.16 **SANITATION.** The Contractor shall provide sanitary facilities for all persons working on the Work.

2-1.17 **NIGHT WORK AND NORMAL WORKING HOURS.** Normal working hours at the construction site shall be between the hours of 7:00 a.m. and 7:00 p.m. Monday through Friday. Legal holidays are excluded. Certain utility connections and street operations are anticipated to require night Work by the Contractor during low usage periods. The Contractor may also be required to prosecute the Work at night if, at any time, the Director shall deem it necessary for the progress of the Work, or if emergencies arise. The Contractor shall promptly comply with any such requirements made in writing by the Director. The Contractor will also be permitted to Work at night if Contractor satisfies the Director of the need therefor, in order to maintain the required progress or protect the Work from the elements. Certain activities are required to be performed at night for nominal progress of the Work and/or are specified to be performed at night by other portions of the Supplemental Conditions. When required, ordered, or permitted to Work at night, the Contractor shall provide sufficient and

FOR COUNCIL APPROVAL ONLY

satisfactory lighting and other facilities therefor. The Contractor shall receive no extra payment for night Work, if specified or if required to be performed during the normal progress of the Work, but compensation shall be considered as having been included in the price stipulated for the Work.

If Contractor performs work during weekends, holidays or any non-normal work hours, Contractor shall pay for required City Inspectors.

2-1.18 **LINES AND GRADES.** Unless otherwise provided in the Supplemental Conditions, the Contractor shall lay out all Work, including structures and pipelines, and shall be responsible for any errors resulting therefrom. In all questions arising as to proper location of lines and grades, the Director's decision will be final.

As part of the bid price for the construction of the improvements, the Contractor shall provide and be responsible for the layout of all Work on this project. The Contractor shall provide all necessary surveys, field staking, and positioning for the construction of all components at the proper alignment, elevations, grades, and positions, as indicated on the Contract Drawings and as required for the proper operation and function. The Contractor shall stake its Work area limits. Contractor shall perform all construction staking using a land surveyor licensed in the State of California. Contractor shall provide a staking plan prior to commencement of Work for the City's review and maintain monuments, stakes, and marks, and shall update the plan as necessary. Director, or Director's designated representative, may verify the field condition. Errors or inconsistencies in the Contract Documents discovered by the Contractor shall be reported to the Director within twenty-four (24) hours and prior to constructive forms or related improvements. Any work Installed with this requirement shall be subject to removal and replacement at the Contractor's expense.

FOR COUNCIL APPROVAL ONLY

The Contractor's lay-out shall be based on existing structures, property lines, survey control, and bench marks established by the City. All structures and pipeline connections shall be Installed based on actual elevation of existing structures to which connections are made.

The Contractor shall supply such labor as required, at no extra charge, to aid and assist the Director in checking location and grades of the Work as set by the Contractor if the Director desires to perform this checking. This shall include moving materials and equipment located between monuments and the construction Work.

2-1.19 **ARCHEOLOGICAL DISCOVERIES.** Upon discovery of prehistoric or historic artifacts, or other indicators or examples of cultural resources discovered during the course of site preparation, grading, excavation, construction or other development activities, all operations within fifty feet (50') of the find shall cease until such time as the City provides the services of a qualified archeologist to evaluate the finds and recommend appropriate action.

Prehistoric materials can include flaked stone tools (e.g., projectile points, knives and choppers) or tool making debris of obsidian, chert, quartzite and other materials, culturally darkened soil (i.e., midden, which often contains heat affected rock, ash and charcoal, shellfish remains, and cultural materials), and stone milling equipment such as mortars, pestles and hand stones. Historic material may include wood, stone, concrete or adobe footings, walls and other structural remains; debris filled wells or privies; and deposits of wood, metal, glass, ceramics and other refuse.

2-1.20 **PRESERVATION OF MONUMENTS.** Any monuments or bench marks disturbed by construction operations shall be repaired per the City's standard and promptly re-established by a registered land surveyor or civil engineer. A plat for each monument shall be furnished to the Director after the plat has been recorded with the Placer

FOR COUNCIL APPROVAL ONLY

County Recorder's Office at no additional cost to the City. The recorded plat shall serve as a record of the re-establishment of said existing survey points.

2-1.21 **CONFORMITY WITH CONTRACT DOCUMENTS.** Work and materials shall conform to the lines, grades, cross sections, dimensions and material requirements, including tolerances, required by the Contract Documents. Although measurement, sampling and testing may be considered evidence as to such conformity, the City shall be the sole judge as to whether the Work or materials deviate from the Contract Documents. At its option, the City may elect to accept deviations from the Contract Documents with appropriate backcharge Assessments against the Contractor, and, if such an election is made, the City will provide written notice to the Contractor of such acceptance.

2-1.22 **FINAL CLEANUP.** Prior to final Acceptance of the Work, the Contractor shall thoroughly clean the Premises, remove all temporary structures built by or for the Contractor, and remove all equipment and surplus construction material and debris from the area. The entire project, before Acceptance by the City, shall be left in a neat and clean condition. All Work areas and temporary construction areas shall be returned to essentially the same conditions existing before the commencing of project construction.

2-1.23 **AS-BUILT DOCUMENTS AND DRAWINGS.** The Contractor shall maintain one set of the full size prints furnished by the City and mark thereon in color any deviations from plan dimensions, elevations, or orientations. Also, the Contractor shall locate on said prints, all underground facilities, such as piping, conduits and tanks by accurate field measurement from structure walls, corners, etc. The Contractor shall submit the prints and an electronic CD (searchable PDF or source file format such as AutoCAD) in good condition to the Director upon completion of the job as a condition of Acceptance of the project. Marked prints

FOR COUNCIL APPROVAL ONLY

shall be updated at least once each week and shall be available to the Director for review as to currency prior to developing partial payment estimates. After the completion of testing, but prior to Acceptance, the Contractor shall submit As-Built electrical drawings in color and an electronic CD showing all components and their wiring, and as specified in the Supplemental Conditions.

2-1.24 **SUPERINTENDENCE.** The Contractor shall supervise and direct the Work, which shall be performed in accordance with the requirements of the Contract Documents. The Contractor shall be solely responsible for implementation of all construction means, methods, techniques, sequences, and procedures and for coordination of all portions of the Work under the Agreement. The Contractor shall be solely responsible for the safety of its employees, Subcontractors of any tier, Suppliers, visitors to the Contractor, and other third parties associated with the Contractor.

The Contractor shall designate in writing before starting Work, an authorized representative who shall have the authority to represent and act for the Contractor.

When the Contractor is comprised of two (2) or more persons, firms, partnerships, or corporations functioning on a joint venture basis, said Contractor shall designate in writing before starting Work, the name of one authorized representative who shall have the authority to represent and act for the Contractor. Instances of misconduct, contract non-compliance, unsatisfactory performance, or incompetence by these personnel shall be grounds for the City to direct Contractor to dismiss them from the Project. Contractor shall immediately comply with the City's request for dismissal, at no cost to the City, and shall designate a replacement, which shall be subject to approval by the City.

Said authorized representative shall be present at the site of the Work at all times while Work is actually in progress on the Contract. When Work is not in progress and during periods

FOR COUNCIL APPROVAL ONLY

when Work is suspended, arrangements acceptable to the Director shall be made for any Emergency Work that may be required.

Whenever the Contractor or its authorized representative is not present on any particular part of the Work where it may be desired to give direction, orders will be given by the Director, which shall be received and obeyed by the superintendent or foremen who may have charge of the particular Work in reference to which the orders are given.

Any order given by the Director, not otherwise required by the Supplemental Conditions to be in writing, will on request of the Contractor, be given or confirmed by the Director in writing.

2-1.25 **CHARACTER OF WORKER.** If any Subcontractor or person employed by the Contractor shall appear to the Director to be incompetent or to act in a disorderly or improper manner, he or she shall be removed immediately on the requisition of the Director, and such person shall not again be employed on the Work.

2-1.26 **INSPECTION.** The Contractor shall at all times permit the Director to inspect the Work or any part thereof. The Contractor shall maintain proper facilities and provide safe access for such inspection by the Director to all parts of the Work, and to the shops where the Work is in preparation. Work shall not be covered up until authorized by the Director and the Contractor shall be solely responsible for notifying the Director where and when such Work is in readiness for inspection and testing. Should any such Work be covered without authorization, it shall, if so ordered, be uncovered at the Contractor's expense.

Unless otherwise designated as normal working hours, whenever the Contractor intends to perform Work on Saturday, Sunday, or a Legal Holiday, the Contractor shall give notice to the Director of such intention forty-eight (48) hours prior to performing such Work, or such longer

FOR COUNCIL APPROVAL ONLY

period as may be specified so that the Director may make necessary arrangements.

The observation and/or approval of the workmanship or materials by the City shall not relieve the Contractor of any obligations to fulfill the requirements of the Contract Documents. Workmanship and materials not meeting such requirements shall be corrected and unsuitable Work or material may be rejected, notwithstanding that such Work or materials have been previously observed and/or approved by the City, or payment therefor has been included in a progress estimate.

The City may order re-examination of questioned Work at any time before final Acceptance. If so ordered, the Contractor shall uncover the Work. If such work is found to be in accordance with the Contract Documents, the City will pay for the cost of uncovering, removing, recovering and replacing the parts removed; but if such Work so exposed or examined is not in accordance with the Contract Documents, the uncovering, removal, recovering and replacement shall be at the Contractor's expense. Work that has been covered prior to observation by the City does not qualify as re-examined work; the City may order such work uncovered for observation without payment of any costs.

2-1.27 **REMOVAL OF REJECTED AND UNAUTHORIZED WORK.** All Work which has been rejected shall be remedied, or removed and replaced by the Contractor in a manner acceptable to the Director and no compensation will be allowed the Contractor for such removal, replacement, or remedial Work.

Any Work done beyond the lines shown on the Contract Drawings or established by the Director, or any Work done without written authority will be considered as unauthorized Work and will not be paid for. Upon order of the Director, unauthorized Work shall be remedied, removed, or replaced at the Contractor's expense.

FOR COUNCIL APPROVAL ONLY

Upon failure of the Contractor to comply promptly with any order of the Director made under this section, the Director may cause rejected or unauthorized Work to be remedied, removed, or replaced, and the costs thereof will be deducted from any moneys due or to become due the Contractor.

FOR COUNCIL APPROVAL ONLY

SECTION 3

CHANGES IN THE WORK

3-1.01 **CHANGES.** The Director, without invalidating this Agreement and without notice to Contractor's surety, may order changes in the Work, consisting of additions or deletions, or other revisions. The Contract Price and the Contract Time shall be adjusted accordingly. All such changes in the Work, including in the Contract Price and the Contract Time, shall be authorized only by Contract Change Order, signed by the Director.

If Contractor claims that performance of any work entitles it to additional compensation or to an extension of time for performance of the Work, Contractor shall provide written notice to the City of any such claim prior to undertaking such work. Contractor shall provide written notice of any anticipated impacts to the Contract Price or Contract Time within three (3) Days of discovering such impact, by submitting a Notice of Potential Claim described in Section 7-1.03 below, or notice of delay as described in Section 6-1.09 below. If the Director refuses to issue a Change Order for such work, Contractor shall perform that work if directed or obligated to do so and shall submit a complete and specific Claim for additional compensation and/or extension of time for performance within fifteen (15) Days after such work is performed, as described in Section 7-1.03 below. Failure to provide written notice of claims prior to undertaking such work, failure to provide a timely Notice of Potential Claim, or failure to submit timely a complete and specific Claim for additional compensation and/or extension of the time for performance, shall be deemed a waiver and abandonment of any such Claim. No Claim, dispute or controversy shall interfere with the progress or performance of the Work and the Contractor shall proceed with the Work as directed by the Director. Failure to so proceed shall amount to a

FOR COUNCIL APPROVAL ONLY

default under this Agreement.

3-1.02 **PROPOSED CHANGE ORDERS.** The Contractor will be notified in writing of a proposed Change Order describing the intended change. Within fifteen (15) Days after receipt of a written request, the Contractor shall submit its proposed price to be added or deducted from the Contract Price due to the change and its estimate of the extent of the adjustment in the Contract Time, if any. The Contractor's proposed price to be added to or deducted from the Contract Price shall be supported by a detailed estimate of cost prepared by the Contractor, vendor or Supplier. The Contractor's proposed price submittal shall be accompanied by a statement of the time necessary for the changed Work, together with a description of how this time will be incorporated into the current Construction Schedule. The Contractor shall upon request by the Director permit inspection of its original Contract estimate, subcontract agreements or purchase orders relating to the change.

If agreement is reached on the adjustment in compensation as provided in Section 3-1.05, "Contract Price Adjustment," of these General Conditions, the Contractor shall proceed with the Work as changed at the agreed price.

If the Contractor and the Director fail to agree as to the adjustment in compensation for the performance of the changed Work, the Contractor, upon written order from the Director, shall proceed immediately with the changed Work and the Contract Price shall be adjusted in accordance with Section 3-1.06, "Force Account Payment," of these General Conditions.

If the Contractor fails to submit its cost estimate within such fifteen (15) Day period, the Contractor shall commence the Work as changed immediately upon receipt of written order of the Director, and the Contract Price will be adjusted in accordance with the Director's cost estimate for the changed Work.

FOR COUNCIL APPROVAL ONLY

3-1.03 **EMERGENCY AND INDETERMINATE TYPE CHANGE ORDERS.** Changes in the Work made necessary by an Emergency, as determined by the Director, or changes of a kind where the extent of the Work cannot be determined until completed, may be authorized by the Director in writing. The Change Order shall state that it is issued pursuant to this Section 3-1.03. Upon receipt of an authorized Change Order or other written order of the Director, the Contractor shall proceed with the ordered Work and the Director will maintain a daily job record containing a detailed summary of all labor, materials and equipment required for the changed Work.

Within fifteen (15) Days after receiving a written request, the Contractor shall submit a detailed estimate of cost for the change and any requested change in Contract Time in the same manner as required for proposed Change Orders in Section 3-1.02 of these General Conditions.

3-1.04 **EXECUTED CHANGE ORDER.** A Contract Change Order signed by both the Director and the Contractor is an "executed Contract Change Order." By signing the Contract Change Order, the Contractor agrees that the specified compensation constitutes full compensation for the changed Work, including payment for interruption, disruption, acceleration, extended Overhead, delay or any other "impact" claim or "ripple effect" claim. The Contractor specifically understands and agrees that its execution of the Contract Change Order shall constitute a waiver of any right for the Contractor to claim any additional compensation with respect to the subject matter of the Contract Change Order.

3-1.05 **CONTRACT PRICE ADJUSTMENT.** If a Contract Change Order provides for an adjustment to the Contract Price, the amount of such adjustment shall be determined by one of the following methods, or a combination thereof, as determined by the City and in its sole discretion:

FOR COUNCIL APPROVAL ONLY

A. Lump sum. The Contractor and the City may agree on a lump sum amount for the Change Order. At the City's request, the Contractor will provide pricing for the work. Maximum markups for Contract Change Orders paid for using lump sum pricing shall be paid for in the same manner and in the same amounts as markups for Force Account work, as described in Section 3-1.06 below.

B. Unit Prices. The unit prices set forth in the Contractor's Schedule of Bid Prices will be utilized where they are applicable and acceptable to the City. The Contractor's unit prices shall remain firm and shall not be subject to adjustment unless and until the actual quantity of work is increased or decreased by Contract Change Order in an amount greater than twenty-five percent (25%) from the estimated quantity indicated for such item. No markups will be given for Contract Change Orders paid for using unit prices.

Unit prices for new items included in the Contract Change Order but not included in the original bid shall be as mutually agreed upon or, in the absence of agreement, as determined by the City in the same manner as if the work were to be paid for on a Force Account basis, as described in Section 3-1.06 below.

C. Force Account. Where the City and the Contractor are unable to agree on lump sum pricing and if the City does not elect to utilize the unit prices in Contractor's bid, or such unit prices are not applicable, the changed work will be performed and tracked by the Contractor as Force Account work, as described in Section 3-1.06 below. The City will pay for such work, including markups, properly attributable to the change in accordance with those Force Account provisions.

D. Eliminated Items. The City reserves the right to delete any bid item of Work in its entirety. The City makes no representation that any work under a bid item of Work

FOR COUNCIL APPROVAL ONLY

will be performed, and all work may be subject to a Contract Change Order that deletes such work. Bid items are distinct and severable from the other bid items, and the Contractor shall not be entitled to any anticipated profit, unabsorbed Overhead, or other indirect expense attributable to the deleted item, except as provided immediately below with regard to Force Account mark-ups on the direct and verifiable costs incurred prior to the City's order that deletes the work.

Should any bid item of Work be eliminated in its entirety and not accounted for as described immediately above and, in the absence of an executed Contract Change Order covering such elimination, payment will be made to the Contractor for actual direct and verifiable costs incurred in connection with such eliminated bid item if incurred prior to the date of notification in writing by the City of such elimination. If acceptable material is ordered by the Contractor for the eliminated item prior to the date of notification of such elimination by the City, and if orders for such material cannot be canceled, it will be paid for at the actual direct and verifiable cost to the Contractor. Actual direct costs shall include documented vendor shipping fees, Supplier restocking fees, if applicable, and Contractor handling costs directly related to the eliminated item(s). In such case, the material paid for shall become the property of the City and the actual cost of any further handling will be paid for by the City. If the material is returnable to the vendor and if the City so directs, the material shall be returned and the Contractor will be paid for the actual direct cost of charges made by the vendor for returning the material. The actual direct cost of handling returned materials will also be paid for by the City. The actual direct and verifiable costs to be paid by the City as provided herein will be computed in the same manner as if the work were to be paid for on a Force Account basis, including the application of Force Account mark-ups to said costs.

3-1.06 **FORCE ACCOUNT PAYMENT.** When Work performed pursuant to a

FOR COUNCIL APPROVAL ONLY

Change Order is to be paid for on a Force Account basis, the Contractor's labor, materials and equipment used in the performance of such Work shall be subject to the approval of the City, and the compensation will be determined as set forth below in this section.

3-1.06A **LABOR.** The Contractor will be paid an amount based on the actual cost for the workers (including foremen when authorized by the Director) used in the actual and direct performance of the Work. All labor costs associated with Overhead, whether field or home office, are specifically excluded herein, as those labor costs are covered by the below mark-ups. The cost of labor, whether the employer is the Contractor, Subcontractor or other forces, shall include employer payments; assessment of benefits required by lawful labor union collective bargaining agreements; compensation insurance payments; contributions made to the State pursuant to the Unemployment Insurance Code; and for taxes paid to the Federal Government pursuant to the Social Security Act of August 14, 1935, as amended. No labor cost will be recognized at a rate in excess of the wages prevailing in the locality at the time the Work is performed, nor will the use of a labor classification, which would increase the cost, be permitted unless the Contractor establishes to the complete satisfaction of the Director the necessity for payment at a higher rate.

3-1.06B **MATERIALS.** Only materials furnished by the Contractor and necessarily used in the performance of the Work will be paid for. Such cost of materials may include the costs of procurement, transportation and delivery if necessarily incurred. If a cash or trade discount by the actual supplier is available to the Contractor, it shall be credited to the City. If materials are procured by the purchaser by any method which is not a direct purchase from and a direct billing by the actual supplier to such purchaser, the cost of such materials shall be deemed to be the price paid to the actual supplier plus the actual costs, if any, incurred in the

FOR COUNCIL APPROVAL ONLY

handling of such materials. If the materials are obtained from a supply or source owned wholly or in part by the purchaser, the cost of such materials shall not exceed the price paid by the purchaser for similar materials furnished from said source on Bid items or the current wholesale price for such materials delivered to the job site, less any discounts as provided herein, whichever is lower. If, in the opinion of the Director, the cost of materials is excessive, or if the Contractor fails to furnish satisfactory evidence of the cost to it from the actual supplier within sixty (60) Days after the date of delivery of the materials or within fifteen (15) Days after Acceptance of the Agreement, whichever occurs first, the cost of the materials shall be deemed to be the lowest current wholesale price at which similar materials are available in the quantities required, less any discounts provided herein. The Department reserves the right to furnish such materials required by the Change Order as it deems advisable, and the Contractor shall have no claim for cost or markups on material furnished by the Department.

3-1.06C **EQUIPMENT.** The Contractor will be paid an amount based on the actual cost for the use of equipment directly required and approved by the Director in the performance of the changed Work. No payment will be made for time while equipment is inoperative due to breakdowns or on Days when no Work is performed. In addition, the rental time shall include the time required to move the equipment to the Work from the nearest available source of such equipment, and to return it to the source. If such equipment is not moved by its own power, then loading and transportation costs will be paid. Moving time, loading and transportation costs will only be paid if the equipment is used exclusively on the changed Work during the time between move in and move out. Individual pieces of equipment having a replacement value of One Thousand Dollars ($1000) or less shall be considered to be tools or small equipment, and no payment will be made therefore. For equipment owned,

FOR COUNCIL APPROVAL ONLY

furnished, or rented by the Contractor, no cost therefore shall be recognized in excess of the equipment rental rates published by Caltrans at the following website address: http://www.dot.ca.gov/hq/construc/equipmnt.html. Equipment located at a Work Site and utilized on non-Force Account work shall not eligible for standby payment, and shall be charged on a Force Account basis only when solely performing pre-approved Force Account work tasks.

3-1.06D **MARKUPS.** When a Change Order increases the cost of the Work, the Contractor may add the following maximum markups to its actual costs of labor, materials, or equipment rental:

15 percent for labor;

10 percent for materials; and

5 percent for equipment rental.

The above markups include full compensation, covering the costs of all supervision, bonds, profit, Overhead, and other general expenses not specifically designated as a direct cost in Sections 3-1.06A through 3-1.06C above. The total payment (i.e., direct cost plus applicable markups) shall be deemed to be the actual cost of such work and shall constitute full compensation therefor. The Contractor specifically understands and agrees that such payment shall include any Contractor costs for interruption, disruption, and acceleration, extended Overhead, Change Order management, delay or other "impact" claim or "ripple effect" claim.

When work paid for on a Force Account basis is performed by forces other than the Contractor's own forces, the maximum allowable mark-ups for the Subcontractors' costs shall be fifteen percent (15%) for the cost of labor, ten percent (10%) for the cost of materials, and five percent (5%) for the cost of rented equipment. In these situations where the work is being performed by Subcontractors, the Contractor will only be entitled to an additional five percent

FOR COUNCIL APPROVAL ONLY

(5%) mark-up and will not be entitled to receive the additional mark-ups specified in this section.

When a Change Order decreases the cost of the Work, the reduction in cost shall include a five percent (5%) markup on the estimated cost for furnishing the labor, materials and equipment, which would have been used on such Work, had the Change Order not been issued.

When a Change Order involves both added Work and deleted Work, the markup or markups to be used shall be as follows:

The actual costs of labor, materials, and equipment rental for added and deleted Work shall be calculated separately without adding markups. If the difference between the calculated costs for labor results in an increased cost, a markup of fifteen percent (15%) shall be applied to the increased cost. If the difference between the calculated costs of materials or equipment rental results in an increased cost, a markup of ten percent (10%) and five percent (5%) respectively, shall be applied to the increased costs of materials or equipment rental, as the case may be. If the difference between the calculated costs for labor, materials or equipment rental results in a decreased cost, a markup of five percent (5%) shall be applied to the decreased costs of labor, materials or equipment rental, as the case may be.

Contractor shall not add mark-ups on work performed and billed by City staff nor add mark-ups to successive iterations of proposed Change Order cost proposals returned to Contractor by the City due to incomplete or inaccurate information being originally submitted by the Contractor. If the Contract Price increases by the issuance of Change Orders, the penal amounts of the bonds required shall increase accordingly.

3-1.06E **RECORDS.** The Contractor shall maintain its records in such a manner as to provide a clear distinction between the direct costs of extra work paid for on a Force Account basis and the costs of other operations.

FOR COUNCIL APPROVAL ONLY

From the above records, the Contractor shall furnish the City completed daily extra work reports, on forms acceptable to the City, for each Day's extra work to be paid for on a Force Account basis. The daily extra work reports shall itemize the materials used, and shall cover the direct cost of labor and the charges for equipment rental, whether furnished by the Contractor, Subcontractor, or other forces. The daily extra work reports shall provide names and identifications and classifications of workers, the hourly rate of pay and hours worked, and also the size, type, and identification number of equipment, and hours operated. Daily extra work and Force Account reports (actual or claimed) shall be signed by both the City's and the Contractor's representatives within twenty-four (24) hours of the performance of the work.

Valid copies of vendor's invoices shall substantiate material charges. Such invoices shall be submitted with the daily extra work reports, or if not available, they shall be submitted with subsequent daily extra work reports. Should said vendor's invoices not be submitted within sixty (60) Days after the date of delivery of the material or within fifteen (15) Days after the Acceptance of the Agreement, whichever occurs first, the City reserves the right to establish the cost of such materials at the lowest current wholesale prices at which said materials were available in the quantities, less any discounts.

The City will compare its records with the completed daily extra work reports furnished by the Contractor and make any necessary adjustments. When these daily extra work reports are agreed upon and signed by both parties, said reports shall become the basis of payment for the work performed, but shall not preclude subsequent adjustment based on a later audit by the City.

The Contractor's cost records pertaining to Work paid for on a Force Account basis shall be open to inspection or audit by representatives of the City during the life of the Agreement and for a period of not less than three (3) years after the date of Agreement completion and the

FOR COUNCIL APPROVAL ONLY

Contractor shall retain such records for that period. Where payment for materials or labor is based on the cost thereof to forces other than the Contractor, the Contractor shall make every reasonable effort to insure that the cost records of such other forces will be open to inspection and audit by representatives of the City on the same terms and conditions as the cost records of the Contractor. If an audit is to be commenced more than sixty (60) Days after the date of Acceptance of the Agreement, the Contractor will be given fifteen (15) Days' notice of the time when such audit is to begin.

3-1.07 **COST REDUCTION PROPOSALS.** The City encourages the Contractor to submit Cost Reduction Proposals whenever the Contractor identifies areas and/or instances in which there can be savings to the Work. Contractor may submit to the City, in writing, proposals for modifying the plans, Specifications or other requirements of the Agreement for the sole purpose of reducing the total cost of construction, including the time for completion of the Work. The City may consider such Cost Reduction Proposals and, if accepted, the Agreement will be equitably adjusted. The City has no obligation to consider or accept Cost Reduction Proposals.

FOR COUNCIL APPROVAL ONLY

SECTION 4

CONTROL OF MATERIALS

4-1.01 **MATERIALS.** The Contractor shall furnish all materials required to complete the Work, except materials that are designated in the Supplemental Conditions to be furnished by the City and materials furnished by the City in accordance with Section 3, "Changes in the Work," of these General Conditions.

Unless otherwise specified in the Supplemental Conditions, materials furnished by the Contractor for incorporation into the Work shall be new. When the quality or kind of materials, articles, or equipment is not particularly indicated, then the quality or kind thereof shall be similar to those that are indicated.

Articles or materials to be incorporated in the Work shall be stored in such a manner as to insure the preservation of their quality and fitness for the Work, and to facilitate inspection.

All materials which do not conform to the requirements of the Contract Documents as determined by the Director, will be rejected whether in place or not. Rejected material shall be removed immediately from the site of the Work, unless otherwise permitted by the Director. No rejected material, the defects of which have been subsequently corrected, shall be used in the Work, unless approval in writing has been given by the Director. Upon failure of the Contractor to comply promptly with any order of the Director made under these provisions, the Director shall have the authority to cause the removal and replacement of rejected material and to deduct the cost thereof from any moneys due or to become due the Contractor.

Manufacturer's warranties, guaranties, instruction sheets and parts lists, which are furnished with certain materials incorporated in the Work, shall be delivered to the Director

FOR COUNCIL APPROVAL ONLY

before Acceptance of the Contract.

Unless otherwise designated in the Supplemental Conditions or Specifications, materials furnished by the City will be delivered to the job site. Materials furnished by the City that are designated in the Supplemental Conditions as available at locations other than the job site shall be hauled to the site of the Work by the Contractor at its expense, including any necessary loading and unloading that may be involved.

The Contractor will be held responsible for all materials furnished to it, and shall pay all demurrage and storage charges. City-furnished materials lost or damaged from any cause whatsoever shall be replaced by the Contractor. The Contractor will be liable to the Department for the cost of replacing City-furnished material and such costs may be deducted from any moneys due or to become due the Contractor.

4-1.02 **PRODUCT AND REFERENCE STANDARDS.** When descriptive catalog designations, including manufacturer's name, product brand name, or model number are referred to in the Contract Documents, such designations shall be considered as being those found in industry publications in effect on the day the Notice to Contractors for the Work is dated, except as may be otherwise stated.

When standards or test designations of the Federal Government, trade societies, or trade associations are referred to in the Contract Documents by specific date of issue, these shall be considered as part of the Contract. When such references do not bear a date of issue, the edition in effect on the day the Notice to Contractors for the Work is dated shall be considered as part of the Contract.

4-1.03 **SAMPLING AND TESTING OF MATERIALS.** Unless otherwise specified, all tests shall be performed in accordance with the methods used by the State

FOR COUNCIL APPROVAL ONLY

Department of Transportation (Caltrans) and shall be made by the Director or his or her designated representative.

The State Department of Transportation has developed test methods for testing the quality of materials and Work. These test methods are identified by a California Test followed by the serial number. Copies of individual tests are available at the State Department of Transportation Laboratory, Sacramento, California, and will be furnished to interested persons upon request.

Whenever a reference is made in the Supplemental Conditions to a California Test by number, it shall mean the California test in effect on the day the Notice to Contractors for the Work is dated.

Whenever the Supplemental Conditions provide an option between two (2) or more test methods, the Director will determine the test method to be used.

Whenever a Supplemental Condition, manual, or test designation provides for test reports (such as certified mill test reports) from the manufacturer, copies of such reports, identified as to the lot of material, shall be furnished to the Director. The manufacturer's test reports shall supplement the inspection, sampling and testing provisions of this Section 4-1.03 and shall not constitute a waiver of the City's right to inspect. When material which cannot be identified with specific test reports is proposed for use, the Director may at his or her discretion, select random samples from the lot for testing. Testing specimens from the random samples, including those required for retest, shall be prepared in accordance with the referenced Supplemental Conditions and furnished by the Contractor at its expense. The number of such samples and test specimens shall be entirely at the discretion of the Director.

When requested by the Director, the Contractor shall furnish, without charge, samples of

FOR COUNCIL APPROVAL ONLY

all material entering into the Work, and no material shall be used prior to approval by the Director, except as provided in Section 4-1.04, “Certificates of Compliance,” of these General Conditions.

A. Inspection and Access for Testing. The Contractor shall provide safe access for the Director and his or her inspectors to adequately inspect the quality of Work and conformance with the General and Supplemental Conditions. The Contractor shall provide adequate lighting, ventilation, ladders and other protective facilities as may be necessary for the safe performance of inspections.

The Contractor shall submit samples or specimens of such materials to be furnished or used in the Work as the Director may require. The Contractor shall furnish the Director all necessary labor and facilities for such things as excavation in the compacted fill to depths required to take samples.

Inspections, tests, or favorable review by the Director or others shall not relieve the Contractor from its obligations to perform the Work in accordance with the requirements of the Contract Documents.

Work covered without the favorable review or consent of the Director shall, if required by the Director, be uncovered for examination at the Contractor's expense.

If the Engineer, Architect, or Director considers it necessary or advisable that covered Work be inspected or tested by others, the Contractor, at the Director's request, will uncover, expose or otherwise make available for observation, inspection or testing as the Director may require, that portion of the Work in question, furnishing all necessary labor, materials, tools, and equipment. If it is found that such Work is defective, the Contractor will bear all the expenses of such uncovering, exposure, observation, inspection and testing and of

FOR COUNCIL APPROVAL ONLY

satisfactory reconstruction. If, however, such Work is not found to be defective and the Work was not covered without favorable review of the Director, the Contractor will be allowed an increase in the Contract Price or an extension of the Contract Time, or both, to cover its costs directly attributable to such uncovering, exposure, observation, inspection, testing, and reconstruction and an appropriate Change Order shall be issued.

Whenever the Contractor varies the period during which Work is carried on each Day, the Contractor shall give due notice to the Director so that proper inspection may be provided. Any Work done in the absence of the Director may be subject to rejection. Proper facilities for safe access for inspection to all parts of the Work shall at all times be maintained for the necessary use of the Director and other agents of the City. Authorized representatives and agents of the Director shall be permitted access to inspect all Work and materials wherever it is required for preparation of progress reports, and the Contractor shall provide proper facilities for such access and inspection.

It is the Contractor's responsibility to supervise the Work and complete the project in accordance with the Contract Documents. In the course of managing that effort, the Contractor shall generate its own punch lists as deemed necessary. The Director may prepare punch lists for the Director's own use in communicating with the Contractor; however, the Director shall be under no obligation to prepare punch lists for the Contractor. In general, the Director will prepare punch lists only after the Contractor has given the Director written notice that the subject Work is completed and tested in accordance with the Contract Documents and is ready for operation and/or use and/or occupancy. Failure of the Director to include an item in a punch list shall not relieve the Contractor of its duty to satisfactorily complete all Work required by the Contract Documents.

FOR COUNCIL APPROVAL ONLY

Upon Final Completion of the construction Work and request by the Contractor, the Director will conduct a final inspection as a basis for recommending to the City that the Work be accepted.

B. Field and Materials Testing. Where the Supplemental Conditions require Work to be specially field tested or approved, it shall be tested only in the presence of the Director after timely notice of its readiness for inspection and test, and the Work after testing shall be covered up only upon the consent thereto of the Director.

The results of any tests made are for the information of the Director. Regardless of any test results, the Contractor is solely responsible for the quality of workmanship and materials and for compliance with the requirements of the Contract Drawings and Supplemental Conditions.

Except as specifically required under the Supplemental Conditions, all tests by the Director of materials furnished by the Contractor will be done in accordance with commonly recognized standards of national organizations. The Contractor shall furnish such samples of all materials as required by the Director without charge. No material shall be used unless it has been favorably reviewed by the Director.

Where such inspection and testing are to be conducted by an independent Laboratory or agency, the sample or samples of materials to be tested shall be selected by such Laboratory or agency, or the Director, and not by the Contractor.

C. Costs of Testing.

1. Initial Services: The City shall furnish and pay for all initial testing services required by the Contract Documents. When initial tests indicate non-compliance with the Contract Documents, the cost of initial tests associated with that non-compliance will be

FOR COUNCIL APPROVAL ONLY

deducted by the City from the balance owed the Contractor. The Contractor shall furnish samples of materials for testing as may be required by the Director. Such samples shall be furnished without cost to the City.

2. Retesting: When initial tests indicate non-compliance with the Contract Documents, all subsequent retesting occasioned by the non-compliance shall be performed by the same testing Laboratory and the cost thereof will be deducted by the City from the balance owed the Contractor. Contractor shall be billed for each additional test.

3. Contractor Convenience Testing: Inspection or testing performed exclusively for the Contractor's convenience shall be the sole responsibility of the Contractor.

4. Additional Tests and Inspections: When in the opinion of the Director additional tests or inspections are required because of the manner in which the Contractor executes its Work, such tests and inspections shall be paid for by the City, but will be deducted from the Contract Price. Examples of such tests and inspections are tests of materials substituted for previously accepted materials or substituted for specified materials, retests made necessary by failure of material to comply with the requirements of the Specifications, load tests made necessary because of portions of the structure not fully meeting Specifications or plan requirements, etc.

FOR COUNCIL APPROVAL ONLY

4-1.04 **CERTIFICATES OF COMPLIANCE.** A Certificate of Compliance shall be furnished prior to the use of any materials for which the Supplemental Conditions require that such a Certificate be furnished. In addition, the Director may permit the use of certain materials or assemblies prior to sampling and testing if accompanied by a Certificate of Compliance. The Certificate shall be signed by the manufacturer of the material or the manufacturer of assembled materials and shall state that the materials involved comply in all

respects with the requirements of the Supplemental Conditions. A Certificate of Compliance shall be furnished with each lot of such materials delivered to the Work and the lot so certified shall be clearly identified in the Certificate.

All materials used on the basis of a Certificate of Compliance may be sampled and tested at any time. The fact that material is used on the basis of a Certificate of Compliance shall not relieve the Contractor of responsibility for incorporating material in the Work which conforms to the requirements of the Contract Documents and any such material not conforming to such requirements will be subject to rejection whether in place or not.

The Department reserves the right to refuse to permit the use of material on the basis of a Certificate of Compliance.

The form of the Certificate of Compliance and its disposition shall be as directed by the Director.

FOR COUNCIL APPROVAL ONLY

SECTION 5

LEGAL RELATIONS AND RESPONSIBILITY

5-1.01 **LAWS TO BE OBSERVED.** The Contractor shall keep informed of and observe, and comply with and cause all of its agents and employees to observe and comply with, all prevailing Federal and State laws, and rules and regulations made pursuant to said Federal and State laws, and county and municipal ordinances, and regulations, which in any way affect the conduct of the Contract. If any conflict arises between provisions of the Contract and any such law above referred to, the Contractor shall notify the Director at once in writing. To the fullest extent allowed by law, the Contractor shall defend, indemnify, and save and hold harmless the City or any of its officers, agents, employees, and volunteers against any claim or liability arising from or based on the violation of any such law, rule, or regulation, whether by itself or its agents or employees.

5-1.02 **HOURS OF LABOR.** Eight (8) hours labor constitutes a legal Day's work. The Contractor or Subcontractor shall, as a penalty to City, forfeit Twenty-five Dollars ($25) for each worker employed in the execution of the contract by the respective Contractor or Subcontractor for each calendar day during which such worker is required or permitted to work more than eight (8) hours in any one (1) calendar day and forty (40) hours in any one (1) calendar week in violation of the provisions of the Labor Code, and in particular, Section 1810 to Section 1815, thereof, inclusive, except that Work performed by employees of Contractors in excess of eight (8) hours per day, and forty (40) hours during any one (1) week, shall be permitted upon public work upon compensation for all hours worked in excess of eight (8) hours per day at not less than one and one-half (1-1/2) times the basic rate of pay, as provided in said

FOR COUNCIL APPROVAL ONLY

Section 1815. In addition, Contractor and/or its Subcontractors may be required to pay double the basic rate of pay for all hours worked in excess of twelve (12) hours in any workday and under other circumstances. (See California Code of Regulations, Title 8, Sections 16100(c)(6) and (16200(a)(3)(F) and applicable Department of Industrial Relations prevailing wage determinations.)

5-1.03 **NONDISCRIMINATION.**

A. Attention is directed to Labor Code Section 1735, which reads as follows:

"A contractor shall not discriminate in the employment of persons upon public works on any basis listed in subdivision (a) of Section 12940 of the Government Code, as those bases are defined in Sections 12926 and 12926.1 of the Government Code, except as otherwise provided in Section 12940 of the Government Code. Every Contractor for public works who violates this section is subject to all the penalties imposed for a violation of this chapter."

B. During the performance of this Contract, Contractor and its Subcontractors shall not unlawfully discriminate against any employee or applicant for employment because of race, religious creed, color, national origin, ancestry, physical disability, mental disability, medical condition, genetic information, marital status, sex, gender, gender identity, gender expression, age, sexual orientation, or military and veteran status. The Contractor and Subcontractors shall insure that the evaluation and treatment of their employees and applicants for employment are free of such discrimination. The Contractor and Subcontractors shall comply with the provisions of the California Fair Employment and Housing Act (Government Code §12900, et seq.) and the applicable regulations promulgated thereunder (California Code of Regulations, Title 2, §7285.0 et seq.) and other applicable State and Federal regulations and City

FOR COUNCIL APPROVAL ONLY

policies pertaining to nondiscrimination and affirmative action which are incorporated into this Agreement by reference and made a part hereof as if set forth in full. The Contractor and its Subcontractors shall give written notice of their obligations under this clause to labor organizations with which they have a collective bargaining or other agreement.

C. Contractor shall include the nondiscrimination and compliance provisions of this clause in all subcontracts to perform Work under the agreement.

5-1.04 **PREVAILING WAGE.** The Contractor and any Subcontractor shall comply with Labor Code Sections 1770 et seq. In accordance with said Section 1775 the Contractor and any Subcontractor under the Contractor shall, as a penalty, forfeit to the state or City not more than $200 for each calendar day or portion thereof, for each worker paid less than the prevailing rate as determined by the Director of Industrial Relations for the work or craft in which such worker is employed for under the Contract by the Contractor or by any Subcontractor under the Contractor.

The amount of the penalty shall be determined by the Labor Commissioner based on consideration of both of the following: (a) whether the failure to pay the correct rate of per diem wages was a good-faith mistake and, if so, whether the error was promptly and voluntarily corrected when brought to the attention of the Contractor or Subcontractor; and (b) whether the Contractor or Subcontractor has a prior record of failing to meet its prevailing wage obligations.

The penalty may not be less than forty dollars ($40) for each calendar day, or portion thereof, for each worker paid less than the prevailing wage rate, unless the failure of the Contractor or Subcontractor to pay the correct rate of per diem wages was a good faith mistake and, if so, the error was promptly and voluntarily corrected when brought to the attention of the Contractor or Subcontractor.

FOR COUNCIL APPROVAL ONLY

The penalty may not be less than eighty dollars ($80) for each calendar day, or portion thereof, for each worker paid less than the prevailing wage rate, if the Contractor or Subcontractor has been assessed penalties within the previous three (3) years for failing to meet its prevailing wage obligations on a separate contract, unless those penalties were subsequently withdrawn or overturned.

The penalty may not be less than one hundred twenty dollars ($120) for each calendar day, or portion thereof, for each worker paid less than the prevailing wage rate, if the Labor Commissioner determines that the violation was willful, as defined in subdivision (c) of Section 1777.1 of the Labor Code.

If the amount due under this section is collected from the Contractor or Subcontractor, any outstanding wage claim under Chapter 1 (commencing with Section 1720) of Part 7 of Division 2 of the Labor Code against the Contractor or Subcontractor shall be satisfied before applying that amount to the penalty imposed on that Contractor or Subcontractor pursuant to this section.

The determination of the Labor Commissioner as to the amount of the penalty shall be reviewable only for an abuse of discretion.

In addition to said penalty, the difference between such stipulated prevailing wage rates and the amount paid to each worker for each calendar day or portion thereof for which each worker was paid less than the stipulated prevailing wage shall be paid to each worker by the Contractor or Subcontractor.

If a worker employed by a Subcontractor on a public works project is not paid the general prevailing per diem wages by the Subcontractor, the Contractor is not liable for any penalties described above unless the Contractor had knowledge of that failure of the Subcontractor to pay

FOR COUNCIL APPROVAL ONLY

the specified prevailing rate of wages to those workers or unless the Contractor fails to comply with all of the following requirements:

1. The contract executed between the Contractor and the Subcontractor for the performance of work on the public works project shall include a copy of the provisions of Sections 1771, 1776, 177.5, 1813, and 1815 of the Labor Code.
2. The Contractor shall monitor the payment of the specified general prevailing rate of per diem wages by the Subcontractor to the employees, by periodic review of the certified payroll records of the Subcontractor.
3. Upon become aware of the Subcontractor's failure to pay its workers the specified prevailing rate of wages, the Contractor shall diligently take corrective action to halt or rectify the failure, including, but not limited to, retaining sufficient funds due the Subcontractor for work performed on the public works project.
4. Prior to making final payment to the Subcontractor for work performed on the public works project, the Contractor shall obtain an affidavit signed under penalty of perjury from the Subcontractor that the Subcontractor has paid the specified general prevailing rate of per diem wages to its employees on the public works project and any amount due pursuant to 1813 of the Labor Code.

Pursuant to Section 1775 of the Labor Code, the Division of Labor Standards Enforcement shall notify the Contractor on a public works project within fifteen (15) Days of the receipt by the Division of Labor Standards Enforcement of a complaint of the failure of a Subcontractor on that public works project to pay workers the general prevailing rate per diem wages.

Pursuant to the provisions of California Labor Code Section 1773, the City has obtained

FOR COUNCIL APPROVAL ONLY

the general prevailing rate of wages applicable to the categories of workers the City anticipates will be utilized for this project for straight time, overtime, Saturday, Sunday, and holiday Work. The holiday wage rate listed shall be applicable to all holidays recognized in the collective bargaining agreement of the particular craft, classification or type of worker concerned or, if no collective bargaining applies, those holidays identified in Government Code Section 6700. These wage rates may be obtained from the State Department of Industrial Relations and/or the following website address: http://www.dir.ca.gov/dlsr/DPreWageDetermination.htm, which is incorporated herein as a part of this Contract.

Pursuant to Labor Code Section 1773.2, the general prevailing wage rates set forth above, which forms a part of this Contract, shall be posted by the Contractor at a prominent place at the site of the Work.

Pursuant to Labor Code Section 1773.6 and California Code of Regulations Section 16204, Title 8, changes in general prevailing wage determinations shall apply to the project only if issued by the Director of Industrial Relations prior to the City's bid issuance date.

The City will not recognize any claim for additional compensation because of the payment by the Contractor of any wage rate in excess of the prevailing wage rate set forth in the Contract. The possibility of wage increases is one of the elements to be considered by the Contractor in determining its Bid, and will not under any circumstances be considered as the basis of a claim against the City or Contract.

When both California and Federal prevailing wage rates apply, the Contractor and any Subcontractors shall pay their workers the higher of the two rates. The Contractor and any Subcontractors shall insert this clause in any lower tier contract.

5-1.05 **REGISTRATION REQUIRED AS QUALIFICATION TO BID.**

FOR COUNCIL APPROVAL ONLY

Pursuant to Labor Code Section 1771.1(b), notice is hereby given that a Contractor or Subcontractor shall not be qualified to bid on, be listed in a bid proposal, subject to the requirements of Section 4104 of the Public Contract Code, or engage in the performance of any contractor for public work, as defined in Labor Code Sections 1720, et seq., unless currently registered and qualified to perform public work pursuant to Labor Code Section 1725.5. It is not a violation of Labor Code Section 1771.1 for an unregistered contractor to submit a bid that is authorized by Section 7029.1 of the Business and Professions Code or by Section 10164 or 20103.5 of the Public Contract Code, provided the contractor is registered to perform public work pursuant to Section 1725.5.

5-1.06 **PAYROLL RECORDS.** The Contractor's attention is directed to the following provisions of Labor Code Section 1776. The Contractor shall be responsible for the compliance with these provisions by its Subcontractors.

A. The Contractor and each Subcontractor shall keep accurate and current payroll records, showing the name, address, social security number, work classification, straight time and overtime hours worked each day and week, and the actual per diem wages paid to each journeyman, apprentice, worker, or other employee employed by it in connection with the public work. Each payroll record shall contain or be verified by a written declaration that is made under penalty of perjury, stating both of the following:

1. The information contained in the payroll record is true and correct.

2. The employer has complied with the requirements of Section 1771, 1811, and 1815 for any work performed by his or her employees on the public works project.

B. The payroll records enumerated under subdivision (A) shall be available for inspection at all reasonable hours at the principal office of the Contractor on the following

FOR COUNCIL APPROVAL ONLY

basis:

1. A certified copy of an employee's payroll record shall be made available for inspection or furnished to such employee or his or her authorized representative on request.

2. A certified copy of all payroll records enumerated in subdivision (A) shall be made available for inspection or furnished upon request to a representative of the City, the Division of Labor Standards Enforcement, and the Division of Apprenticeship Standards of the Department of Industrial Relations. The City reserves the right to withhold any progress payments to the Contractor in the event of noncompliance with the subsection.

3. A certified copy of all payroll records enumerated in subdivision (A) shall be made available upon request by the public for inspection or for copies thereof. However, a request by the public shall be made through either the City, the Division of Apprenticeship Standards, or the Division of Labor Standards Enforcement. The public shall not be given access to such records at the principal office of the Contractor.

C. The certified payroll records shall be on forms provided by the Division of Labor Standards Enforcement or shall contain the same information as the forms provided by the Division.

D. Each Contractor shall file a certified copy of the records enumerated in subdivision (A) with the entity that requested the records within ten (10) Days after receipt of a written request.

E. Any copy of the records made available for inspection as copies and furnished upon request to the public or any public agency by the City, the Division of Apprenticeship Standards or the Division of Labor Standards Enforcement shall be marked or

FOR COUNCIL APPROVAL ONLY

obliterated to prevent disclosure of an individual's name, address and social security number. The name and address of the Contractor awarded the Contract or Subcontractor performing the Contract shall not be marked or obliterated. Any copy of records made available for inspection by, or furnished to, a joint labor-management committee established pursuant to the federal Labor Management Cooperation Act of 1978 (Section 175a of Title 29 of the United States Code) shall be marked or obliterated only to prevent the disclosure of an individual's name and social security number. A joint labor-management committee may maintain an action in a court of competent jurisdiction against an employer who fails to comply with Section 1774. The court may award restitution to an employee for unpaid wages and may award the joint labor-management committee reasonable attorneys' fees and costs incurred in maintaining the action. An action under this subdivision may not be based on the employer's misclassification of the craft of a worker on its certified payroll records. Nothing in this subdivision limits any other available remedies for a violation of this section.

F. The Contractor shall inform the City of the location of the records enumerated under subdivision (A), including the street address, city and county, and shall, within five (5) business days, provide a notice of a change of location and address.

G. The Contractor shall have ten (10) Days in which to comply subsequent to receipt of written notice requesting the records enumerated in subdivision (A). In the event that the Contractor or Subcontractor fails to comply within the ten (10) Day period, the Contractor shall, as a penalty to the State or City, forfeit twenty-five ($25) Dollars for each calendar day, or portion thereof, for each worker, until strict compliance is effectuated. Upon the request of the Division of Apprenticeship Standards or the Division of Labor Standards Enforcement, these penalties shall be withheld from any progress payment or final payment then due. A contractor

FOR COUNCIL APPROVAL ONLY

is not subject to a penalty assessment pursuant to this section due to the failure of a Subcontractor to comply with this section.

5-1.07 **SAFETY REQUIREMENTS.** It is the intent of the parties that the City is not an exposing, creating, controlling, or correcting employer under California Labor Code Section 6400. In accordance with generally accepted construction practices and State law, the Contractor shall have the authority and be solely and completely responsible for conditions on the Work Site, including safety of all persons and property during performance of the Work. Moreover, the Contractor shall be the controlling employer and has the authority and responsibility to enforce Work Site safety. The Contractor shall be responsible for conducting daily safety inspections and assuring all hazards and violations are abated. The Contractor is responsible for assuring that all Subcontractors adhere to the minimum Cal/OSHA safety requirements and that each Subcontractor has an effective Cal/OSHA IIPP (Illness and Injury Prevention Program) in place that specifically addresses all potential exposures, such as, but not limited to, fall protection, confined space, and trenching/shoring. These requirements shall apply continuously and not be limited to normal working hours. The Contractor shall be responsible for any delay costs or damages in the event the progress of Work is slowed or stopped due to a safety violation.

FOR COUNCIL APPROVAL ONLY

The Contractor shall designate a safety officer and have in place a health and safety plan in accordance with the laws of State of California and conduct safety meetings and document them in accordance with the law. The Contractor shall have the safety record available for inspection during working hours and shall submit job site safety meeting reports with each Application for Payment.

Prior to Contractor commencing construction project work on City property, Contractor

shall make available copies of its Health and Safety Plan (HASP) that meets or exceeds applicable Cal/OSHA regulations. The Contractor's HASP shall also meet or exceed the requirements of any applicable City-wide or departmental specific Injury and Illness Prevention Programs (IIPP) and other HASP programs, procedures, and plans. Potentially applicable HASP programs, procedures, and plans include, but are not limited to, the following:

1. Bloodborne Pathogens Exposure Control Plan;
2. Confined Space Entry Procedure;
3. Electrical Safety Program (Lockout/Tagout);
4. Emergency Action Plans (Site Specific);
5. Fire Prevention Plans (Site Specific);
6. Hazardous Waste Operations Emergency Response Plan (or Equivalent);
7. Hazard Communication Program (SDS's and Right-to-Know training);
8. Heat Illness & Prevention Plan;
9. Hearing Conservation Program;
10. Hot Work/Welding Procedure;
11. Job Hazard Analyses/Standard Operating Procedures;
12. Traffic Control & Flagging;
13. Excavation/Dig Safe Procedure;
14. Fall Protection Plan;
15. Personal Protective Equipment Plan;
16. Respirable Crystalline Silica Exposure Control Plan;
17. Respirator Program;
18. Soils Management Plan (for contaminated soils); and

FOR COUNCIL APPROVAL ONLY

19. Transite (Asbestos) Pipe Work Procedure.

Additionally, Contractor shall be responsible for complying with all City-wide and departmental specific safety requirements as identified in the Supplemental Conditions or presented at a pre-construction meeting.

Contractor shall inform City in advance of the quantity of chemical(s) to be used for the project and the total quantity of chemical(s) that will be brought onto City property. In addition, Contractor shall provide City with one copy of the Safety Data Sheet (SDS) for each chemical expected to be used to complete the project and for each chemical brought to the Work Site, regardless of whether such chemicals are ultimately used for the project.

The services of the Director in conducting construction review of the Contractor's performance is not intended to include review of the adequacy of the Contractor's Work methods, equipment, bracing or scaffolding, or safety measures, in, on, or near the construction site. If a City employee observes a safety violation, the City employee will report the violation to the Contractor who is then responsible for assuring the violation is abated.

The Contractor is hereby informed that Work on this project could be hazardous. The Contractor shall carefully instruct all personnel working in potentially hazardous Work areas as to potential dangers and shall provide such necessary safety equipment and instructions as are necessary to prevent injury to personnel and damage to property. Special care shall be exercised relative to Work underground.

All Work and materials shall be in strict accordance with all applicable State, City, County, and Federal Rules, Regulations, and Codes, and attention is drawn to the requirements of Cal/OSHA. The Contractor shall be solely responsible for compliance with all City, County and State blasting requirements and for any damages caused by its operations.

FOR COUNCIL APPROVAL ONLY

To ensure compliance with California Labor Code Section 6705, the Contractor shall submit to the City, at least five (5) Days in advance of excavation of any trench five feet (5') or more in depth, Working Drawings to the Director showing the design of shoring, bracing, sloping and other provisions to be made for worker protection from the hazard of caving ground during the excavation of such trench or trenches. If such Working Drawings vary from the shoring system standards established by the Cal/OSHA Construction Safety Orders of the Division of Industrial Safety, the plan shall be prepared and signed by a registered civil or structural engineer in the State of California. This in no way relieves the Contractor from the requirement of maintaining safety in all operations performed by the Contractor or the Contractor's Subcontractors and nothing in this section shall be deemed to allow the use of a shoring, sloping or protective system less effective than that required by the Cal/OSHA Construction Safety Orders of the Division of Industrial Safety Contractor's Working Drawings shall be subject to approval insofar as the details affect the character of the finished Work and for compliance with design requirements applicable to the construction when specified or called for, but details of the design will be left to Contractor who shall be responsible for the successful construction of the Work. The City shall approve Working Drawings before any Work involving such drawings is performed. Approval and/or acceptance by the City or its designated agent only constitutes acknowledgment of the submission and does not constitute review or approval of the designs, design assumptions or criteria, completeness of submissions, applicability to areas of intended use, nor implementation of the plans, which are solely the responsibility of the Contractor and its registered engineer.

The Contractor shall perform its Work as not to expose personnel to, or to discharge into the atmosphere from any source whatever, smoke, dust, asbestos, toxic chemicals or other air

FOR COUNCIL APPROVAL ONLY

contaminants in violation of the laws, rules, and regulations of the governmental entities having jurisdiction and shall bear full and exclusive responsibility for any release of hazardous or non-hazardous chemicals or substances during the course of the Work. The Contractor shall immediately report any such release to the City. The Contractor shall be solely responsible for all claims and expenses associated with the response to, removal and remediation of the release, including, without limitation, payment of any fines or penalties levied against the City by any agency as a result of such release and shall defend, indemnify, and save and hold harmless the City, its officers, agents, employees, and volunteers from any claims arising from such release. For purposes of this section only, the term "claims" shall include:

1. All notices, orders, directives, administrative or judicial proceedings, fines, penalties, fees, or charges imposed by any governmental agency with jurisdiction; and

2. Any claim, cause of action, or administrative or judicial proceeding brought against the City, its officers, agents, employees, and volunteers for any loss, cost (including reasonable attorneys' fees), damage or liability, sustained or suffered by any person or entity, including the City.

If the performance of the Work creates any hazardous wastes, those wastes shall be properly disposed of according to federal, state, and local laws, at the expense of the Contractor. The Contractor shall dispose of the wastes under its own EPA Generator Number. In no event shall the City be identified as the generator. The Contractor shall notify the City of any such hazardous wastes and the City reserves the right to a copy of the results of any tests conducted on the wastes, and, at its cost, to perform additional tests or examine those wastes, prior to disposition. The Contractor shall defend, indemnify, and save and hold harmless the City, its

FOR COUNCIL APPROVAL ONLY

officers, agents, employees, and volunteers from any claims arising from the disposal of the hazardous wastes, regardless of the absence of negligence or other malfeasance by the Contractor. Disposal of all Hazardous Materials must be done in accordance with all laws and regulations. Copies of required regulatory documentation including copies of final manifests shall be supplied to the City.

Contractors or Subcontractors removing one hundred or more square feet (100') of asbestos must be "Certified" in accordance with State law. All Work involving exposure to asbestos and all other hazardous materials shall be performed with protection of personnel in compliance with all applicable regulations and safety requirements including, but not limited to, California Code of Regulations Section 1529, Title 8.

Nothing in these General Conditions is to be construed to permit Work not conforming to governing codes. When Contract Documents differ from governing codes, the Contractor shall furnish and Install the higher standards called for without extra charge.

5-1.08 **SUBSURFACE EXCAVATIONS, NOTIFICATION.** The Contractor shall contact the regional notification center, "Underground Service Alert," and schedule its Work to allow ample time for the center to notify its members and, if necessary, for any member to field locate and mark its facilities. Without limiting the foregoing, the Contractor's attention is directed to Government Code Sections 4216 to 4216.9, and in particular Section 4216.2.

5-1.09 **PUBLIC SAFETY.** The Contractor shall assume all responsibility for public safety during the performance of its Work, and all costs arising therefrom shall be included in the Contract Price. Whenever the Contractor's operations create a condition hazardous to traffic or to the public, it shall furnish, erect and maintain, at its expense, such fences, barricades, lights, signs, and other devices and take such other protective measures as are

FOR COUNCIL APPROVAL ONLY

necessary to prevent accidents or damage or injury to the public. The Contractor shall establish the pedestrian detours with comparable lighting to the original pedestrian areas. The Contractor shall arrange for such flaggers as are necessary to give adequate warning to traffic or to the public of any dangerous conditions affecting traffic. For Work in a public right-of-way, the Contractor shall comply with the rules and regulations of the State, County, or local agency that owns the right-of-way.

The Contractor shall promptly and fully comply with and carry out, and shall without separate charge therefor to the City, all safety and first aid requirements prescribed by all applicable Federal, State, and local laws and regulations, rules, and orders. The Work shall be done in a safe manner; and the Contractor shall safeguard the safety and health of its employees, Subcontractors, and the people of local communities. The Contractor shall also be reasonable for ensuring that its Subcontractors comply with the provisions of this section.

Upon the failure of the Contractor to comply with any of the requirements of this section, the City shall have the authority, but not the duty, to stop the Work until such failure is remedied. The Contractor shall not be entitled to an adjustment of the Contract Time or an increase in the Contract Price due to any such suspensions.

When required by the Contract Documents, the Contractor shall construct, maintain, and remove detours for use of public traffic, without additional cost to the City, unless separate payment is specified in the Special Provisions.

The failure or refusal of the Contractor to construct and maintain detours at the proper time shall be sufficient cause for closing down the work until such detours are in satisfactory condition for use by public traffic.

Due care shall be exercised to avoid injury to existing improvements or facilities, utility

FOR COUNCIL APPROVAL ONLY

facilities, adjacent property and trees, shrubs, and other plants that are not to be removed.

Trees, shrubs and other plants that are not to be removed, and pole lines, fences, signs, survey markers and monuments, buildings and structures, conduits, pipe lines, sewer and waterlines, highway facilities, and any other improvements or facilities, under or above ground, that are within or adjacent to the work limit line shall be protected from injury or damage, and the Contractor shall provide and Install suitable safeguards to protect such objects from injury or damage. If such objects are injured or damaged by reason of the Contractor's operations, they shall be replaced or restored at the Contractor's expense. The facilities shall be replaced or restored to a condition as good as when the Contractor entered upon the Work Site, or as good as required by the Contract Documents if any such objects are part of the Work. The City may make or cause to be made such temporary repairs as are necessary to restore to service any damaged facility. The cost of such repairs shall be borne by the Contractor, and the costs may be deducted from any monies due or to become due to the Contractor under the Agreement.

The fact that any underground facilities is not shown on the Contract Drawings shall not relieve the Contractor of its responsibility pursuant to "Utility Facilities" in Section 2-1.12 elsewhere in the Contract Documents. It shall be the Contractor's responsibility, pursuant thereto, to ascertain the location of such underground improvements or facilities, which may be subject to damage by reason of its operations.

Full compensation for furnishing all labor, materials, tools, equipment and incidentals, and for doing all the Work involved in protecting or repairing property as specified in this section, shall be considered as included in the prices paid for the various Contract items of work and no additional compensation will be allowed therefor.

5-1.10 **EMERGENCIES.** In an Emergency affecting the safety of life, the

FOR COUNCIL APPROVAL ONLY

Work, or adjoining property, the Contractor, without special instructions or authorization from the City, shall act at its discretion to prevent such threatened loss or injury. In such an Emergency, the Contractor may perform such additional work as is reasonably required. Any compensation claimed by the Contractor on account of Work performed to an Emergency shall be determined in accordance with the provisions relating to Force Account payment contained elsewhere in the Contract Documents.

5-1.11 **APPRENTICES.** Attention is directed to Labor Code Sections 1777.5, 1777.6 and 1777.7 and Title 8, California Code of Regulations Section 200 et seq. In accordance with Section 1777.5, the Contractor shall secure the necessary certificates and shall contribute to the apprenticeship fund or funds, a provided therein. The Contractor shall require each Subcontractor who will perform work or labor or render service to the Contractor in or about the construction of the work to fully comply with Sections 1777.5 and 1777.6 of the Labor Code. To insure compliance and complete understanding of the law regarding apprentices, and specifically the required ratio thereunder, each Contractor or Subcontractor should, where some questions exist, contact the Division of Apprenticeship Standards, , or one of its branch offices prior to commencement of Work on the public works Contract. Responsibility for compliance with this section lies with the prime Contractor.

It is State and City policy to encourage the employment and training of apprentices on public works Contracts as may be permitted under local apprenticeship standards.

5-1.12 **FAIR LABOR STANDARDS ACT.** Attention is invited to the fact that the City has been advised by the Wage and Hour Division, U.S. Department of Labor, that Contractors engaged in construction Work are required to meet the provisions of the Fair Labor Standards Act of 1958 and as amended (52 Stat. 1060).

FOR COUNCIL APPROVAL ONLY

5-1.13 **WORKERS' COMPENSATION.** Pursuant to the requirements of Labor Code Section 1860, the Contractor will be required to secure the payment of workers' compensation to its employees in accordance with the provisions of Labor Code Section 3700.

Prior to the commencement of Work, the Contractor shall sign and file with the Director a certification in the following form:

> "I am aware of the provisions of Labor Code Section 3700 which require every employer to be insured against liability for workers' compensation or to undertake self-insurance in accordance with the provisions of that code, and I will comply with such provisions before commencing the performance of the Work of this Contract."

5-1.14 **AIR POLLUTION CONTROL AND ASBESTOS.** The Contractor shall comply with all air pollution control rules, regulations, ordinances and statutes which apply to any Work performed pursuant to the Contract, including any air pollution control rules, regulations, ordinances and statues, specified in Government Code Section 11017.

In the absence of any applicable air pollution control rules, regulations, ordinances or statutes governing solvents, all solvents, including but not limited to the solvent portions of paints, thinners, curing compounds, and liquid asphalt used on the project shall comply with the applicable material requirements of the applicable Air Quality Management District. All containers of solvent, paint, thinner, curing compound, or liquid asphalt shall be labeled to indicate that the contents fully comply with said requirements.

Unless otherwise provided in the Supplemental Conditions, material to be disposed of shall not be burned, either inside or outside the Premises.

The Contractor shall also comply with all rules, regulations, statutes and ordinances

FOR COUNCIL APPROVAL ONLY

regarding asbestos removal and disposal, including but not limited to, 42 U.S.C. Sections 7401, 7412 and 7601, 40 C.F.R. Part 61, Subpart M, and California Code of Regulations Section 1529, Title 8.

If the Contractor discovers that a building to be demolished or renovated contains asbestos containing material, the Contractor shall immediately cease Work and notify the City.

5-1.15 **USE OF PESTICIDES.** The Contractor shall comply with all local, state and federal rules and regulations of the Department of Food and Agriculture, the Department of Health, the Department of Industrial Relations and all other agencies which govern the use of pesticides required in the performance of the Work.

Pesticides shall include but shall not be limited to herbicides, insecticides, fungicides, rodenticides, germicides, nematocides, bactericides, inhibitors, fumigants, defoliants, desiccants, soil sterilants, and repellents.

Any substance or mixture of substances intended for preventing, repelling, mitigating, or destroying weed, insects, diseases, rodents, or nematodes and any substance or mixture of substances intended for use as a plant regulator, defoliant or desiccant shall be considered as pesticide.

5-1.16 **SOUND AND LIGHT CONTROL REQUIREMENTS.** The Contractor shall comply with all local sound control, light control, and noise level rules, regulations and ordinances which apply to any Work performed pursuant to the Contract. Work shall not begin before 7 a.m. nor occur after 7 p.m., unless otherwise permitted by the City.

Each internal combustion engine, used for any purpose on the Work or related to the Work, shall be equipped with a muffler, in good working order, of a type recommended by the manufacturer. No internal combustion engine shall be operated on the project without said

FOR COUNCIL APPROVAL ONLY

muffler.

5-1.17 **WEIGHT LIMITATIONS.** Unless expressly permitted elsewhere in the Contract Documents, the Contractor shall not operate construction equipment or vehicles of any kind which, laden or unladen, exceed the maximum weight limits set forth in Division 15 of the Vehicle Code over completed or existing base, surfacing, pavement or structures.

5-1.18 **ENVIRONMENTAL CLEARANCES; MITIGATION MONITORING PROGRAMS; AND REGULATORY AGENCY PERMIT REQUIREMENTS.** The Department will obtain all environmental clearances and other authorizations necessary for this project as set forth in the Contract Documents. The Contractor shall comply with the provisions, including giving notices during construction when required, of said authorizations. In the event the obtaining of said authorizations delays completion of all or any portion of the Work, an extension of time determined pursuant to the provisions in Section 6-1.08, "Liquidated Damages," of these General Conditions will be granted.

Contractor shall comply with: (1) all mitigation identified in the mitigation monitoring program (attached to and adopted as a component of the mitigated negative declaration or Environmental Impact Report) to mitigate impacts to protected natural resources; and (2) all related permit requirements issued by the regulatory agencies authorizing the project. Contractor shall defend, indemnify, and save and hold harmless the City, its officers, agents, employees, and volunteers from any fines, claims, suits, actions or regulatory sanctions of every name, kind and description brought forth, or on account of, damage to protected natural resources from or arising out of Contractor's negligence or willful misconduct in the performance of this Agreement.

5-1.19 **PERMITS AND LICENSES.** The Contractor acknowledges and agrees that, prior to the submission of its bid for the Work, it fully familiarized itself with the

FOR COUNCIL APPROVAL ONLY

requirements of all applicable federal, state, county and municipal laws, codes, rules, and regulations, as well as the conditions of any required licenses and permits.

The Contractor shall procure all permits and licenses, including any applicable building permits (except those procured or to be procured by the City which are listed elsewhere in the Contract Documents), in coordination with the Director, pay all charges and fees, and give all notices necessary and incident to the due and lawful prosecution of the Work. Contractor shall be responsible for applying, paying all fees, and coordination for obtaining all permits for completion of the Work. All permits and licenses shall be obtained in sufficient time to prevent delays to the Work. Contractor will apply to the City for reimbursement for such permits costs. Accordingly, Contractor should not include the anticipated costs for permits in its bid, as the necessary permit costs will be reimbursed by the City.

The California Environmental Quality Act (Public Resources Code, Section 21000 to 21177) may be applicable to permits, licenses and other authorizations which the Contractor must obtain from State or local agencies in connection with performing the Work. The Contractor shall comply with the provisions of that Act in obtaining such permits, licenses and other authorizations, and all permits, licenses and other authorizations shall be obtained in sufficient time to prevent delays to the Work.

The Contractor shall maintain the applicable Contractor's license as identified in the Notice to Contractors and City business license for the duration of the Work.

5-1.20 **WATER POLLUTION.** The Contractor shall comply with all water pollution control rules, regulations, ordinances and statutes which apply to any Work performed pursuant to the Contract, including any water pollution control rules, regulations, and statutes, specified by the most current State of California NPDES General Permit for Stormwater

FOR COUNCIL APPROVAL ONLY

Discharges Associated with Construction Activity.

The Contractor shall take all necessary precaution to protect streams, vernal pools, ponds, reservoirs, and lakes from pollution with fuels, oils, bitumen, calcium chloride, and other harmful materials as consistent with the law. Also, the Contractor shall conduct and schedule operations so as to avoid discharging pollutants, such as but not limited to: sediment and silt to the storm drain system. The storm drain system consists of all facilities that are designed to convey stormwater to the Waters of the State as defined in the California Water Code. The storm drain system includes, but is not limited to, all streets, gutters, drain inlets, roadside ditches, streams, vernal pools, ponds, and lakes. Care shall be exercised to preserve roadside vegetation beyond the limits of construction.

5-1.21 **PROTECTION AND USE OF PROPERTY.** The Contractor shall be responsible for and provide and maintain all proper temporary walkways, covered walkways, barriers, roads, guards, railings, lights, warning signs, and take precaution at all times to avoid injury or damage to any person or any property, and upon completion of the Work, or at other times as directed, restore Premises and adjacent property to a proper condition. In the event of such injury or damage, Contractor shall report such injury and damage to City within forty-eight (48) hours of occurrence.

The Contractor shall protect adjoining property and nearby buildings, including City buildings, City roads, and public streets or roads, from dust, dirt, debris, or the nuisance arising out of the Contractor's operations or storage practices, and, if ordered by the Director, the Contractor shall provide and Install suitable safeguards, approved by the Director, to protect such objects from damage. If such objects are damaged by reason of the Contractor's operations, they shall be replaced or restored at the Contractor's expense.

FOR COUNCIL APPROVAL ONLY

If the Contractor damages any buildings, roads, utilities, or other property which belong to the City, or any Department or agency thereof, then the Director, at his or her option, may retain from the money due under the Contract an amount sufficient to insure repair of the damage.

The Director may make or cause to be made such temporary repairs as are necessary to restore to service any such damaged facility. The cost of such repairs shall be borne by the Contractor and may be deducted from any moneys due or to become due the Contractor under the Contract.

5-1.22 **RESPONSIBILITY FOR DAMAGE AND INDEMNIFICATION.**

The City of Roseville, its officers, agents, employees, and volunteers, including but not limited to the Director and his or her designee, shall not be answerable or accountable in any manner: for any loss or damage that may happen to the Work or any part thereof; for any loss or damage to any of the materials or other things used or employed in performing the Work; for injury to or death of any person, either workers or the public; or for damage to property from any cause which might have been prevented by the Contractor, its workers, or anyone employed by the Contractor or the Contractor's Subcontractors.

The Contractor shall be responsible for any liability imposed by law and for injuries to, or death of, any person including, but not limited to, workers and the public, or damage to property resulting from defects or obstructions, or from any cause whatsoever during the progress of the Work or at any time before its completion and final Acceptance.

To the fullest extent allowed by law, the Contractor shall defend (through counsel acceptable to the City), indemnify, and save and hold harmless the City, and its respective officers, agents, Subcontractors, employees, and volunteers, and the successors and assigns of

FOR COUNCIL APPROVAL ONLY

any of them, (hereinafter referred to as "Indemnitees") from and against all claims, demands, liability, suits, actions, costs or expenses for any and all loss or damage, including but not limited to, personal injury, property damage, or economic loss, arising out of or resulting from allegations of (1) Contractor's use of the City's property or any activities or Work performed hereunder by the Contractor; (2) the Contractor's performance of the Work under the Agreement; or (3) the Contractor's breach of any provision of the Agreement. The duty of the Contractor to indemnify and save harmless includes the duties to defend as set forth in Civil Code Section 2778. The only exception to these provisions is that the Contractor's obligations under this section will not apply to the extent that the claims, demands, liability, suits, actions, costs or expenses are caused by Indemnitees' active negligence, willful misconduct, criminal acts, or for defects in design furnished by the Indemnitees, misconduct, criminal acts, or for defects in design furnished by the Indemnitees.

The Contractor waives any and all rights to any type of express or implied indemnity against the City, its officers, agents, employees, or volunteers.

The Contractor's responsibility for such defense and indemnity obligations shall survive the termination or completion of this Contract for the full period of time allowed by law. The defense and indemnity obligations of this Contract are undertaken in addition to, and shall not in any way be limited by, the insurance obligations contained in this Contract. The parties intend that the defense and indemnity obligations in this Contract shall be broadly construed.

Any person, firm or corporation that Contractor authorizes to Work on the City's property including Subcontractors, shall be deemed to be an agent of the Contractor for purposes herein, shall be subject to all the applicable terms herein, and shall be within the scope of the Contractor's indemnity obligation described herein.

FOR COUNCIL APPROVAL ONLY

In addition to any remedy authorized by law, so much of the money due the Contractor under and by virtue of the Contract as shall be considered necessary by the Department may be retained by the City until disposition has been made of such suits or claims for damages.

The retention of money due the Contractor shall be subject to the following:

A. The City will give the Contractor thirty (30) Days' notice of its intention to retain funds from any partial payment which may become due to the Contractor prior to Acceptance of the Contract. Retention of funds from any payment made after Acceptance of the Contract may be made without such prior notice to the Contractor.

B. No retention of additional amounts out of partial payments will be made if the amount to be retained does not exceed the amount being withheld from partial payments pursuant to Section 7-1.07, "Progress Payments," of these General Conditions.

C. If the City has retained funds and it is subsequently determined that the City is not entitled to be indemnified and saved harmless by the Contractor in connection with matter for which such retention was made, the Department shall be liable for interest on the amount retained at the legal rate of interest for the period of such retention.

5-1.23 **INSURANCE COVERAGE.**

A. Evidence of Maintenance Required. The Contractor shall, at its expense, procure and at all times maintain in full force and effect at a minimum the insurance required by this section on all of its operations; and the Contractor shall not allow any Subcontractor to commence work until similar insurance required of the Subcontractor has been obtained and filed. An original Certificate of Insurance, and copies of all required endorsements, all in a form approved by the Risk Manager, evidencing all required coverage or policies shall be filed after the award of the bid and prior to approval of the Contract by the City Council. Contractor shall

FOR COUNCIL APPROVAL ONLY

provide ten (10) days prior written notice to the City of any reduction of coverage limits or cancellation of the coverage or policies shall be given to the City of Roseville as Certificate holder.

B. Qualifying Insurers. With the exception of the State Compensation Insurance Fund, all required insurance policies shall be issued by companies acceptable to the City and licensed to do business in the State of California and who hold a current policy holders alphabetic and financial size category rating of not less than AVII according to the most recent issue of Best's Insurance Reports.

C. Insurance Required.

1. Commercial General Liability (CGL): Insurance Services Office Form CG 00 01 covering CGL on an "occurrence" basis, including products and completed operations with limits of no less than Two Million Dollars ($2,000,000) per occurrence for bodily injury, personal injury and property damage for projects under One Million Dollars ($1,000,000) and limits of no less than Five Million Dollars ($5,000,000) per occurrence for bodily injury, personal injury and property damage for projects over One Million Dollars ($1,000,000). If a general aggregate limit applies, either the aggregate limit shall apply separately to this project or the general aggregate limit shall be twice the required occurrence limit.

The Commercial General Liability insurance shall include the following, copies of which shall be provided:

a. Inclusion of the City of Roseville, and its officers, agents, employees, and volunteers, as additional insureds (except for workers' compensation) as respects services or operations under the Contract. The additional insured endorsement for the general liability policy shall be at least as broad as the ISO CG 2010 10 01 combined with ISO CGL

FOR COUNCIL APPROVAL ONLY

Endorsement CG 2037 10 01. Any other endorsement must be approved in writing by the City. Endorsements must include coverage for on-going and completed operations, which coverage shall be maintained for four (4) years following completion of the Project. Endorsements shall cover the City of Roseville, its officers, agents, employees, and volunteers.

b. The insurance shall provide coverage for claims by one insured against another insured and the policies shall not contain any cross-suits exclusions, cross-liability exclusions, or insured versus insured exclusions. The policies shall not contain any classification exclusions purporting to deny coverage for any work to be performed by Contractor or any of its Subcontractors.

c. Stipulation that the insurance is primary and noncontributory, as evidenced by a separate endorsement (CG 20 01 04 13 or an equivalent) or section of the policy, and that neither the City nor its insurers will be called upon to contribute to a loss.

d. Such insurance shall specifically cover the contractual liability of the Contractor.

e. Any available insurance proceeds in excess of the specified minimum insurance coverage requirements and limits shall be available to the additional insureds. Furthermore, the requirements for coverage and limits shall be: (1) the minimum coverage and limits specified in this Agreement; or (2) the full coverage and maximum limits of any insurance proceeds available to the named insureds, whichever is greater.

f. Waiver of subrogation endorsement.

g. The Contractor shall furnish a certificate for the period covered.

2. Automobile Liability: Insurance Services Office Form Number CA 0001 covering Code 1 (any auto), or if Contractor has no owned autos, Code 8 (hired) and Code 9

FOR COUNCIL APPROVAL ONLY

(non-owned), with limits of no less than One Million Dollars ($1,000,000) per accident for bodily injury and property damage.

3. Workers' Compensation: In accordance with the provisions of the California Labor Code, Contractor is required to be insured against liability for Workers' Compensation or to undertake self-insurance. Statutory Workers' Compensation and Employers' Liability of at least One Million Dollars ($1,000,000) shall cover all Contractors staff while performing any work incidental to the performance or this Agreement.

4. Professional Liability: Professional Liability (Errors and Omission) Insurance appropriate to Contractor's profession, with a limit of liability not less than One Million Dollars ($1,000,000) per occurrence or claim and Two Million Dollars ($2,000,000) aggregate to cover all design and engineering services rendered by Contractor pursuant to the Agreement. Coverage must commence from the first day that Contractor or any of its Subcontractors provided any design or engineering services in connection with the Project.

5. Builder's Risk/Course of Construction Insurance (If Required by Risk Management): The Contractor shall be responsible for all loss, damage or destruction whatsoever to the work called for by this Contract until the approval of a Notice of Completion or acceptance of the Work if no Notice of Completion is to be recorded.

The Contractor shall secure "All Risk" type of builder's Risk Insurance of the type covering one hundred percent (100%) of the value of the work performed under this Contract (the value is presumed to be the Contract amount unless otherwise stated in Supplemental Conditions) and all materials, equipment, or other items to be incorporated therein while the same are located at the construction site, a bonded warehouse, or its place of manufacture. At any time, the policy shall cover the value of the work completed. The policy shall cover hazards

FOR COUNCIL APPROVAL ONLY

including the losses due to fire, explosion, hail, rain, lightning, flood (separate insurance as needed), vandalism, malicious mischief, wind, collapse, aircraft, and smoke.

The policies providing such insurance shall name the City as a loss payee as its respective interests may appear, and certified copies of such policies shall be filed with the City. The maximum deductible allowable under the Builder's All Risk policy shall be five percent (5%) of the Contract amount.

Builder's Risk Insurance is not required for coverage of losses in excess of five percent (5%) of the Contract amount for damages resulting from earthquake in excess of a magnitude of 3.5 on the Richter scale, or tidal waves. Coverage in the amount of five percent (5%) of the Contract amount for such losses is required.

6. Pollution Coverage: Contractor shall procure pollution liability coverage or other insurance covering claims for bodily injury or property damage arising out of the abatement, removal, storage, transportation, or other exposure to hazardous materials or pollutants, in limits not less than Two Million Dollars ($2,000,000). Contractor shall add the City and all parties required to be indemnified by Contractor as additional insured on all pollution liability policies.

7. Higher Coverage Limits: If Contractor maintains higher coverage limits than the amounts shown above, then the City requires and shall be entitled to coverage for the higher coverage limits maintained by Contractor. Any available insurance proceeds in excess of the specified minimum limits of insurance and coverage shall be available to the City.

8. Claims Made Coverage: Liability insurance coverage may not be written on a “claims made” or modified occurrence basis. The Certificate of Insurance must clearly provide that the coverage is on an “occurrence” basis.

FOR COUNCIL APPROVAL ONLY

5-1.24 **OTHER INSURANCE PROVISIONS.**

A. The requirements of the Standard Specifications as to types and limits of insurance coverage to be maintained by the Contractor, and any approval of insurance by the City, are not intended to, and shall not in any manner limit or qualify the liabilities and obligations otherwise assumed by the Contractor pursuant to the Contract, including, but not limited to, the provisions concerning indemnification, nor preclude the City from taking any other action available to it under any other provision of the Contract or law.

B. The City acknowledges that some insurance requirements contained in these Standard Specifications may be fulfilled by self-insurance on the part of the Contractor. However, this shall not in any way limit liabilities assumed by Contractor under the Contract. Any self-insurance must be approved in writing by the City, in its sole discretion and shall not reduce the limits of liability. Any deductibles or self-insured retentions ("SIR") must be declared on the certificate of insurance and approved by City in writing. Policies containing any SIR provision shall provide or be endorsed to provide that the SIR may be satisfied by either the named insured or City. City reserves the right to obtain a full certified copy of any insurance policy and endorsements. The failure to exercise this right shall not constitute a waiver of such right.

C. The Contractor agrees to include in its contracts with all subcontractors the same requirements and provisions of this Contract, including the indemnity and insurance requirements, to the extent they apply to the scope of the subcontractor's work. Furthermore, the Contractor shall require its subcontractors to agree to be bound to the Contractor and the City in the same manner and to the same extent as the Contractor is bound to the City under this Contract. Additionally, the Contractor shall obligate its subcontractors to comply with these

FOR COUNCIL APPROVAL ONLY

same provisions with respect to any tertiary subcontractor, regardless of tier. A copy of the City's indemnity and insurance provisions will be furnished to the subcontractor or tertiary subcontractor upon request. Alternatively, the Contractor may insure subcontractor(s) under its own policy.

D. The City, its officers, agents, employees, and volunteers are to be covered as insureds with respect to liability arising out of automobiles owned, leased, hired or borrowed by or on behalf of the Contractor; and with respect to liability arising out of work or operations performed by or on behalf of the Contractor including materials, parts or equipment furnished in connection with such work or operations. Coverage shall not extend to any indemnity coverage for the active negligence of the additional insured in any case where an agreement to indemnify the additional insured would be invalid under California Insurance Code Section 11580.04.

E. The limits of insurance required in this Contract may be satisfied by a combination of primary and excess insurance. Any excess insurance shall contain or be endorsed to contain a provision that such coverage shall also apply on a primary and noncontributory basis for the benefit of the City (if agreed to in a written contract) before the City's own insurance shall be called upon to protect it as a named insured.

F. The insurance procured by Contractor shall be subject to the approval of the City, but any acceptance of insurance certificates by the City shall in no way limit or relieve Contractor of its duties and responsibilities under the Agreement.

G. Contractor shall be responsible for all premiums, deductibles, and self-insured retention applicable to the insurance it is required to procure under the Contract. All deductibles or self-insured retentions over five hundred thousand dollars ($500,000) must be approved by the City, in writing. Contractor shall be responsible for all deductibles, self-insured

FOR COUNCIL APPROVAL ONLY

retention payments, and/or increased premiums incurred if the City's policies of insurance are forced to cover damages or respond to claims for which Contractor or its Subcontractors were obligated to provide insurance under the Contract.

H. Failure of the City to enforce in a timely manner any of the requirements of these insurance provisions shall not act as a waiver to enforcement of any of these provisions at a later date.

I. Contractor's indemnity obligations shall not be limited by these insurance provisions and shall survive the expiration of the Contract and the insurance provisions of the Contract shall likewise not be limited by the indemnity provisions of the Contract.

J. THE CITY RESERVES THE RIGHT TO WITHHOLD ANY PROGRESS PAYMENTS TO THE CONTRACTOR IN THE EVENT OF NONCOMPLIANCE WITH ANY INSURANCE REQUIREMENTS.

5-1.25 **THIRD PARTY BENEFICIARY.** No provisions in the Contract Documents shall in any way inure to the benefit any third party (including the public at large or any member thereof) so as to constitute such person a third party beneficiary of the Contract, or of any term or condition or other provision of the Contract or otherwise give rise to any cause of action in any person not a party to the Agreement, except as expressly provided elsewhere in the Contract Documents.

5-1.26 **COORDINATION AND ACCESS.** The Contractor acknowledges that the City may award, or has already awarded, other construction contracts for additional work or may perform additional work with its own forces and that such work may affect the Work under this Agreement. Additionally, the Contractor acknowledges that the State and other public and private agencies may be granted a right-of-entry by the City for the purpose of constructing

FOR COUNCIL APPROVAL ONLY

facilities within and adjacent to the Work Site. It is the obligation of the Contractor to coordinate its Work with the work of others working within or adjacent to the City's property.

During performance of its Work, the Contractor shall not have exclusive access to or use of the work areas. The City may also require that certain facilities and areas be used concurrently by the Contractor and by other contractors working in the area. When two (2) or more contractors are employed on related or adjacent City work, each shall conduct its operations in such a manner as not to cause any unnecessary delay or hindrance to the other. Each contractor shall be responsible to the other for all damage to any work, to persons or property caused to the other by its operations, and for loss caused the other due to any unnecessary delays or failure to finish the work within the time specified for completion.

If any party of the Contractor's Work depends on the work of any other contractor and/or the City for proper execution and/or results, the Contractor shall promptly notify the City of any discrepancies and/or defects in said other work that would render its work unsuitable for proper execution and/or results prior to proceeding with the Contractor's own Work. If it becomes necessary, the City will resolve coordination and access problems.

The Contractor and its representative in charge of the Work shall familiarize themselves with the City's property and Work Site, and adjacent surroundings in the vicinity of said Wok, and any private or public operations on adjoining properties.

5-1.27 **OCCUPANCY BY THE DEPARTMENT PRIOR TO ACCEPTANCE.** The City may at any time notify the Contractor in writing that it intends to take Beneficial Occupancy of any portion of the Work even though the Work may not be substantially complete. Unless the reason for the City's taking Beneficial Occupancy is that the Contractor has not completed the Work (or portions thereof) in accordance with the Contract

FOR COUNCIL APPROVAL ONLY

Time, the City's Beneficial Occupancy shall relieve the Contractor from its responsibility for maintenance, loss or damage to that portion of the Work for which the City has taken Beneficial Occupancy other than that resulting from the Contractor's act or omission, negligence, willful misconduct or breach of warranty.

Should the Work (or portion thereof) not be completed in accordance with the Construction Schedule within the Contract Time (as adjusted under the terms of the Contract Documents), the City shall have the right, but not the obligation, to take Beneficial Occupancy of the Work. In such event, the Contractor shall not be entitled to any additional compensation on account of said occupancy by the City, nor shall the Contractor be relieved of any of its responsibilities under the Contract Documents, including, without limitation, Contractor's obligation to complete the Work in accordance with the Construction Schedule.

Beneficial Occupancy shall not be deemed an Acceptance by the City either of the Work or of any portion thereof, nor will it relieve the Contractor of full responsibility for correcting defective Work or materials found at any time before the formal written Acceptance of the entire Contract by the Director or during the full warranty period after such Acceptance, as provided in Section 7-1.12, "Warranty," of these General Conditions.

The City's Beneficial Occupancy shall not relieve the Contractor of its responsibility to maintain all insurance and bonds required under the Contract Documents until the entire project is accepted by the City.

5-1.28 **RIGHT TO OPERATE UNSATISFACTORY FACILITIES AND EQUIPMENT.** If, after Installation, the operation or use of the facilities or equipment to be furnished under this Contract proves to be unsatisfactory to the Director, the City shall have the right to operate and use such facilities or equipment until they can, without damage to the City,

FOR COUNCIL APPROVAL ONLY

be taken out of service for correction or replacement. Such period of use of the defective facilities or equipment, pending correction or replacement, shall in no way decrease the warranty period required for the acceptable corrected or replaced facilities or equipment.

5-1.29 **CONTRACTOR'S RESPONSIBILITY FOR THE WORK.** Except as otherwise provided herein, the Contractor shall have the charge and care of the Work and shall bear the risk of injury or damage to any part of the Work by the action of the elements or from any other cause whether arising from the execution or from the nonexecution of the Work until the Acceptance of the Contract by the Director. The Contractor shall rebuild, repair, restore, and make good all injuries or damages to any portion of the Work occasioned by any cause before its completion and Acceptance, and shall bear the expense thereof. In case of suspension of Work from any cause whatever, the Contractor shall be responsible for the Work and it shall also be responsible for all materials, and shall properly store them if necessary, and shall provide suitable drainage and erect temporary structures where necessary.

The Contractor will be relieved of responsibility for any injury or damage to the Work caused by the following:

A. An earthquake in excess of a magnitude of 3.5 on the Richter Scale or a tidal wave, when the effect of such has been proclaimed a disaster or state of emergency by the Governor of the State of California or by the President of the United States, or was of such magnitude at the site of the Work as to have been sufficient to have caused a proclamation of disaster or state of emergency, had it occurred in a populated area.

B. Occupancy and use by the Department or the public prior to the completion of the entire project.

C. Acts of the Federal Government or the public enemy.

FOR COUNCIL APPROVAL ONLY

5-1.30 **RESPONSIBILITY FOR UTILITIES.** The Contractor shall be responsible at its own cost for any and all Work, expense or special precautions caused or required by the existence or proximity of utilities encountered in performing the Work, including without limitation, repair of any or all damage and all hand or exploratory excavation required. The Contractor is cautioned that such utilities may include communication cables or electrical cables which may be high voltage, and when working or excavating in the vicinity of such cables, or the ducts enclosing such cables, the Contractor shall undertake at its own cost any special precautions required. Suitable warning signs, barricades, and safety devices shall be erected as necessary or required.

However, if during the course of the Work the Contractor encounters utility Installations which are not shown or indicated in the Contract Documents or which are found in a location substantially different from that shown, and such utilities are not reasonably apparent from visual examination, then the Contractor shall promptly notify the Director in writing. Where necessary for the Work of the Contract, the Director shall issue a written order to the Contractor to make such adjustments, rearrangement, repair, removal, alteration, or special handling of such utility, including repair of the damaged utility. The Contractor shall perform the Work described in such written order, and compensation therefor will be made in accordance with Section 3 of these General Conditions relating to changes in the Work. Except for the items of cost specified in said Section 3, the Contractor shall receive no compensation for any other cost, damage, delay, interference, or hindrance to him or her due to the presence of such utility. If the Contractor fails to give the notice specified above and thereafter acts without instructions for the Director, then the Contractor shall be liable for any or subsequent to discovery thereof, and the Contractor shall repair and make good such damage at its own cost.

FOR COUNCIL APPROVAL ONLY

The precise location of underground facilities can only be determined by careful probing or hand digging in compliance with Article 6 of the Cal/OSHA Construction Safety Orders which states in part:

> "Prior to opening an excavation, effort shall be made to determine whether underground installations, i.e., sewer, water, fuel, electric lines, etc., will be encountered, and if so, where such underground installations are located. When the excavation approaches the approximate location of such an installation, the exact location shall be determined by careful probing or hand digging, and, when it is uncovered, adequate protection shall be provided for the existing installation."

The location of known existing utilities and pipelines are shown on the Contract Drawings in their approximate locations. Some of the locations include multiple conduits. The Contractor shall exercise care in avoiding damage to those facilities which are to remain in service subsequent to the construction of the particular new facility involved and the Contractor will be held responsible for any repairs if damaged. The Contractor shall also exercise care in maintaining those pipes and facilities required for continuing operation of the existing facilities until such time as they can be abandoned. There is no guarantee that all utilities or obstructions are shown on the Contract Drawings or that the locations indicated are accurate.

The Contractor shall exercise extreme caution in working in the area adjacent to the existing pipelines and utility services. It is essential that all the existing facilities be maintained in service. Construction of the connections between the existing facilities and the new facilities shall be at times and during periods acceptable to the City. The Contractor shall advise the Director in writing of its proposed Construction Schedule for these connections at least forty-eight (48) hours in advance.

FOR COUNCIL APPROVAL ONLY

The Contractor shall uncover all piping and conduits, to a point one foot (1') below the pipe, where crossings, interferences, or connections are shown on the Contract Drawings, prior to trenching or excavating for any pipe or structures, to determine actual elevations. New pipelines shall be laid to such grade as to clear all existing facilities which are to remain in service. If the Contractor does not expose all required utilities, it shall not be entitled to additional compensation for Work necessary to avoid interferences nor for repair to damaged utilities. Excavations around underground electrical ducts and conduits shall be performed using extreme caution to prevent injury or damage to workers and to the electrical ducts or conduits.

5-1.31 **PROPERTY RIGHTS IN MATERIALS.** Nothing in the Contract shall be construed as vesting in the Contractor any right of property in the materials used after they have been attached or affixed to the Work or soil or after partial payment has been made as provided in Section 7-1.07, "Progress Payments," of these General Conditions for material delivered on the ground or stored subject to or under the control of the City and unused. All such material shall become the property of the City upon being so attached or affixed or upon payment for materials delivered on the ground or stored subject to or under the control of the City and unused, as provided in said Section 7-1.07.

5-1.32 **COURT ORDERED DELAY.** If, pursuant to court order, the Department temporarily suspends performance of all or any portion of the Work, an extension of time determined pursuant to the provisions in Section 6-1.08, "Liquidated Damages," of these General Conditions will be granted.

5-1.33 **NO PERSONAL LIABILITY.** Neither the Director, nor any other officer or authorized employee of the City, shall be personally responsible for any liability arising under or by virtue of the Contract.

FOR COUNCIL APPROVAL ONLY

5-1.34 **RIGHTS IN LAND AND IMPROVEMENTS.** The Contractor shall make no arrangements with any person or entity to permit occupancy or use of any land, structure or building within the limits of the Work, for any purpose whatsoever, either with or without compensation, in conflict with any agreement between the City and any third party owner, former owner, or tenant of such land, structure or buildings. The Contractor shall not occupy City-owned property outside the limit of the Work shown on the Contract Drawings unless it obtains prior approval.

5-1.35 **ANTITRUST CLAIMS.** The Contractor's attention is directed to the following provision of Public Contract Code Section 7103.5(b), which is applicable to the Contractor and its Subcontractors:

> " In entering into a public works contract or a subcontract to supply goods, services, or materials pursuant to a public works contract, the contractor or subcontractor offers and agrees to assign to the awarding body all rights, title, and interest in and to all causes of action it may have under Section 4 of the Clayton Act (15 U.S.C. Sec. 15) or under the Cartwright Act (Chapter 2 [commencing with Section 16700] of Part 2 of Division 7 of the Business and Professions Code), arising from purchases of goods, services, or materials pursuant to the public works contract or the subcontract. This assignment shall be made and become effective at the time the awarding body tenders final payment to the contractor, without further acknowledgement by the parties."

5-1.36 **RIGHTS TO DRAWINGS, TECHNICAL DATA PATENTS.** Shop

FOR COUNCIL APPROVAL ONLY

Drawings and Working Drawings submitted to the City by the Contractor, Subcontractor or any lower tier Subcontractor pursuant to the Agreement, are the property of the City and the City may use, and disclose in any manner and for any purpose, Shop Drawings and Working Drawings delivered under the Contract.

Technical Data including manuals or instructional materials, computer or microprocessor software which are delivered or submitted to the City by the Contractor, Subcontractor, or any lower tier Subcontract pursuant to the Contract are the property of the City, and the City may use or disclose same in any manner and for any purpose.

The Contractor shall assume all costs arising from the use of patented materials, equipment, devices, or processes used on or incorporated in the Work, and shall defend, indemnify and save and hold harmless the City, and its duly authorized representatives, from all suits at law, or in equity, and actions of every nature for, or on account of the use of any patented materials, equipment, devices or processes. In case some materials, equipment, devices or processes are held to constitute an infringement and their use enjoined, the Contractor, at its expense, shall:

1. Secure for the City the right to continue using said materials, equipment, devices or processes by suspension of the injunction or by procuring a license or licenses; or
2. Replace such materials, equipment, devices, processes; or
3. Modify them so that they become non-infringing or remove the enjoined materials, equipment, devices or processes and refund the sums paid therefor without prejudice to any other rights of the City.

5-1.37 **PAYMENT OF TAXES.** Contractor shall pay all taxes and duties applicable to and assessable against any Work, equipment, materials, services, processes, and

FOR COUNCIL APPROVAL ONLY

operations incidental to or involved in the Agreement, including but not limited to, retail sales and use, transportation, export, import, business, and special taxes. The Contractor is responsible for ascertaining and acquainting itself with such taxes and making all necessary arrangements to pay them. The Contractor will maintain records that are auditable records, and these records shall be subject to the City's review to verify that Contractor's tax payments are current at all times.

The Contract Price paid for the Work shall include full compensation for all taxes which the Contractor is required to pay, whether imposed by Federal, State or local government, including, without being limited to, Federal excise tax. No tax exemption certificate nor any document designed to exempt the Contractor from payment of any tax will be furnished to the Contractor by the Department, as to any tax on labor, services, materials, transportation, or any other items furnished pursuant to the Contract.

The Contractor shall withhold and pay any and all sales and use taxes, withholding taxes, whether Federal, State, or local, Social Security taxes, State Unemployment Insurance charges and all other taxes which are now or hereafter may be required to be paid or withheld under any laws.

5-1.38 **GRATUITIES AND CONFLICT OF INTEREST.** The Contractor shall not offer or provide gratuities in the form of gifts, entertainment, loans, meals, rewards, and/or services to representatives of the City, including but not limited to, officers, employees, agents, Engineering Service Consultants, Consulting Engineers and Architects, Inspectors and/or Testing Agencies retained by the City. If it is found that the Contractor has violated this provision, the Contract may be subject to termination for default as defined elsewhere in these General Conditions.

FOR COUNCIL APPROVAL ONLY

During the term of the Contract and until the final payment has been made to the Contractor, the Contractor shall not employ or compensate in any manner whatsoever, the City's officers, employees and authorized representatives, agents, and any Engineering Service Consultants, Consulting Engineers and Architects, Inspectors, and/or Testing Agencies retained by the City. Any exception to the employment or compensation to any of the above named parties must be made in writing by the City. If the Contractor offers or provides employment or compensation to those named above during the term of the Contract, the Contract may be subject to termination for default.

5-1.39 **COOPERATION.** Should construction be under way by City forces or other forces or by other Contractors within or adjacent to the limits of the Work or should Work of any other nature be under way by such forces within or adjacent to said limits, the Contractor shall cooperate with all such forces to the end that any delay, interference or hindrance to their Work will be avoided. The right is reserved to perform other or additional Work at or near the site at any time, by the use of such forces.

5-1.40 **DIGGING TRENCHES OR OTHER EXCAVATIONS.** In the event any work involves digging trenches or other excavations that extend deeper than four feet (4') below the surface, City and Contractor shall comply with the following:

A. The Contractor shall promptly, and before the following conditions are disturbed, notify City in writing of any:

1. Material that the Contractor believes may be material that is hazardous waste, as defined in Section 25117 of the Health and Safety Code, that is required to be removed to a Class I, Class II, or Class III disposal site in accordance with provisions of existing law.

FOR COUNCIL APPROVAL ONLY

2. Subsurface or latent physical conditions at the site differing from those made available to Contractor for inspection as provided in the project proposal.

3. Unknown physical conditions at the site of any unusual nature, different materially from those ordinarily encountered and generally recognized as inherent in Work of the character provided for in the Contract.

B. The City shall promptly investigate the conditions, and if it finds that the conditions do materially so differ, or do involve hazardous waste, and cause a decrease or increase in the Contractor's cost of, or the time required for, performance of any part of the Work shall issue a Change Order under the procedures described in the Contract.

C. In the event that a dispute arises between the City and the Contractor whether the conditions materially differ, or involve hazardous waste, or cause a decrease or increase in the Contractor's cost of, or time required for, performance of any part of the Work, the Contractor shall not be excused from any scheduled completion date provided for by the Contract, but shall proceed with all work to be performed under the Contract. The Contractor shall retain any and all rights provided either by contract or by law which pertain to the resolution of disputes and protests between the contracting parties. However, no claim of the Contractor under this clause shall be allowed unless the Contractor has given the notice required by this Section. No claim by the Contractor for an equitable adjustment hereunder shall be allowed if asserted after final payment under this Contract.

5-1.41 **CONTRACTOR REGISTRATION.** No contractor or subcontractor may work on a public works project unless registered with the Department of Industrial Relations pursuant to Labor Code section 1725.5. During the performance of this Contract, the Contractor and its subcontractors shall have a continuing legal obligation to maintain current

FOR COUNCIL APPROVAL ONLY

registration with the Department of Industrial Relations. The Contractor is hereby notified that this project is subject to compliance monitoring and enforcement by the Department of Industrial Relations.

5-1.42 **CITY OF ROSEVILLE ENCROACHMENT PERMITS AND RIGHTS-OF-WAY.** The Contractor need not obtain a separate encroachment permit from the City prior to construction within street rights-of-way or other City rights-of-way. Execution of the Contract by the City shall be deemed an encroachment permit for work required by the Contract within rights-of-way. All work shall conform to the rules and regulations of encroachment permits and shall be subject to the inspection and approval of the Director and City Engineer.

To the extent indicated in the Contract Drawings, the City will provide the rights-of-way over private lands or the site to enable the Contractor to perform its work. The Contractor shall be solely responsible for securing any additional rights-of-way desired by the Contractor. The City will not be a party to nor assume any liability for any separate agreements reached between the Contractor and any third parties with respect to these additional rights-of-way. The Contractor shall procure evidence that agreements are in place with said third parties before the Contractor uses those areas covered by the agreements. Any damage to such private lands caused by the Contractor's operations shall be the sole responsibility of the Contractor.

5-1.43 **CALIFORNIA AIR RESOURCES BOARD REGULATIONS.** The Contractor shall comply with any applicable regulations of the California Air Resources Board ("CARB") set forth below.

A. In-Use Off-Road Diesel-Fueled Fleets. If the Contractor will use vehicles subject to Cal. Code Regs., tit. 13, §§ 2449 et seq. for the project, it shall submit a valid

FOR COUNCIL APPROVAL ONLY

Certificate of Reported Compliance to the City as provided in § 2449(n).

B. Advanced Clean Fleets. Pursuant to Cal. Code Regs., tit. 13, § 2013(i)(1), the Contractor shall submit to the City either a signed statement stating that it is not subject to the High Priority and Federal Fleets regulation of title 13, CCR section 2015 through 2015.6, or a document evidencing that it is listed on the CARB Advanced Clean Fleets webpage as a compliant fleet.

FOR COUNCIL APPROVAL ONLY

SECTION 6

PROSECUTION AND PROGRESS

6-1.01 **SUBLETTING AND SUBCONTRACTING.** The Contractor shall be responsible for all Work performed under the Contract. The Contractor shall give its personal attention to the fulfillment of the Contract and shall keep the Work under its control. Nothing in the Contract Documents shall create any contractual relationship between the City and any Subcontractor. The Contractor is fully responsible to the City for the acts and omissions of its Subcontractors of any tier. When any Subcontractor fails to prosecute a portion of the Work in a manner satisfactory to the Director, that Subcontractor shall not again be employed on the Work. Although the sections of the Contract may be arranged according to various trades, or general grouping of the Work, the Contractor is not obligated to sublet the Work in such manner. The Director will not arbitrate disputes among Subcontractors or between Contractor and one or more Subcontractors concerning responsibility for performing any part of the Work.

The on-site production of materials produced by other than the Contractor's own forces shall be considered as subcontracted. The erection, establishment or reopening of on-site plants for production of materials and the operation thereof in the production of materials for use on the Work shall conform to the requirements relating to labor set forth in the Contract Documents.

The Contractor shall also be responsible for coordinating the Work performed by Subcontractors and Suppliers.

The Contractor shall not substitute any person as Subcontractor in place of a Subcontractor listed on its bid proposal without the written approval of the Director. Substitutions must be in accordance with the provisions of the "Subletting and Subcontracting

FOR COUNCIL APPROVAL ONLY

Fair Practices Act" beginning with Public Contract Code Section 4100. Violations of this Act by the Contractor may subject it to penalties which may include cancellation of Contract, Assessment of ten percent (10%) of the Subcontractor's bid, and disciplinary action by the Contractors State License Board.

The Contractor shall pay any Subcontractors approved by the City for work that has been satisfactorily performed no later than seven (7) Days from the date of Contractor's receipt of progress payments by the City. Within seven (7) Days after receipt from the City of funds attributable to work performed by a Subcontractor, Contractor shall release any retainage payments withheld to the Subcontractor. In the event Contractor does not make progress payments or release retention to Subcontractors in accordance with the time period specified herein, Contractor may be subject to prompt payment penalties per statute.

6-1.02 **ASSIGNMENT.** The performance of this Contract may not be assigned, except upon the written consent of the City Council of the City of Roseville. Consent will not be given to any proposed assignment which would relieve the original Contractor or its surety of their responsibilities under the Contract nor will the City consent to any assignment of a part of the Work under the Contract.

The Contractor may assign moneys due or to become due to it under the Contract and such assignment will be recognized by the City, if given proper notice thereof, to the extent permitted by law, but any assignment of moneys shall be subject to all proper set-offs in favor of the City and to all deductions provided for in the Contract and particularly all money withheld, whether assigned or not, shall be subject to being used by the City for the completion of the Work in the event that the Contractor should be in default therein.

6-1.03 **BEGINNING OF WORK.** After the execution of the Contract by both

FOR COUNCIL APPROVAL ONLY

parties, the City will issue the Notice to Proceed upon its determination that it is appropriate for the Contract Time to commence.

The Contractor shall begin Work within fifteen (15) Days after receiving the Notice to Proceed from the Director, subject to the requirements stated elsewhere in the Contract Documents regarding, among other things, the submittal of Baseline Schedule, and shall diligently prosecute the same to completion within the time limit provided in the Supplemental Conditions. Contractor shall also achieve any and all Contract milestones as described elsewhere in the Contract Documents.

The Contractor shall notify the Director, in writing, of its intent to begin Work at least seventy-two (72) hours before Work is begun. The notice shall be delivered to the Director and shall specify the date the Contractor intends to start. If the project has more than one (1) location of Work, a separate notice shall be given for each location.

The Contractor is not authorized to perform any Work until it has received a Notice to Proceed from the City. Should the Contractor begin Work in advance of receiving notice that the Contract has been approved as above provided, any Work performed by it in advance of the said date of approval shall be considered as having been done by the Contractor at its own risk and as a volunteer unless said Contract is so approved thereafter.

FOR COUNCIL APPROVAL ONLY

6-1.04 **PROGRESS SCHEDULE.**

A. Preliminary Progress Schedule. The Contractor shall submit to the Director, within twenty (20) Days after date of the Notice to Proceed, a Preliminary Progress Schedule covering the Contractor's activities over the first three (3) months of operation in detail and the remainder of the project in summary. The Preliminary Progress Schedule shall schedule the project within the Contract Time for completion of the Work, and shall be subject to

favorable review by the Director.

B. CPM Schedule. The Contractor shall submit an acceptable Critical Path Method (CPM) Schedule to the Director within thirty (30) Days after the receipt of the Notice to Proceed. Subsequent revisions to said schedule shall be submitted as set forth hereinafter. The requirement for the CPM schedule is included to allow for adequate planning and execution of the Work, to determine the critical nature of delays, and to assist the Director in appraising the reasonableness of the proposed schedule and evaluating progress of the Work. The CPM schedule submitted under this Section shall utilize a CPM format, either the precedence or arrow diagramming method. The definitions of CPM terms and functions shall be as provided in the Associated General Contractors of America book *CPM in Construction, A Manual for General Contractors*, or a favorably reviewed alternative publication or reference. No progress payment will be made prior to submission and acceptance of the CPM Schedule.

1. The CPM schedule system shall consist of diagrams and accompanying mathematical analyses. The diagrams shall show elements of the project in detail and an entire project summary. Diagrams shall show the order and interdependence of activities and sequence in which the Work is to be accomplished as planned by the Contractor. The basic concept of a network analysis diagram shall be followed to show how the start of a given activity is dependent on the completion of preceding activities and its completion restricts the start of following activities. Detailed network activities shall include, in addition to construction activities, the submittal and favorable review of samples of material and Shop Drawings, the procurement of critical materials and equipment, fabrication of special material and equipment, and their Installation and testing. All activities of the City and the Director that affect progress and required Contract dates for completion of all or parts of the Work shall be shown. The

FOR COUNCIL APPROVAL ONLY

selection and number of activities shall be subject to favorable review by the Director. Summary networks shall be time scaled. Durations shall be in Days and shall not exceed fifteen (15) Days, except for submittal and delivery items. Where the duration of continuous Work exceeds fifteen (15) Days, Work items in the Construction Schedule shall be subdivided by location, approximate stationing or other sub-element of the Work.

The graphic network diagram shall include for each activity, the description, activity number, the estimated duration in Days, and all activity relationship lines. The network diagram shall be drawn for the early start of activities. All significant Submittals shall be scheduled along with manual Submittals and training on all large or critical pieces of equipment. If the precedence technique is utilized, the schedule project shall include a calendar in Work Days, a network report sorted by early start and a logic table report sorted by preceding Work item. If the arrow technique is utilized, the schedule report shall include a calendar in Work Days, a network report sorted by early start, a network report sorted by I-J numbers, and a network sorted by slack time and I-J numbers.

2. The critical path shall be shown on all reports and on the graphic network diagram. The activities which constitute the critical path shall be identified.

3. The mathematical analysis of the network diagram shall include a tabulation of each activity. The following information shall be furnished as a minimum for each activity:

(a) preceding and following event numbers

(b) activity description and number

(c) estimated duration of activities

(d) earliest start date (by calendar date)

FOR COUNCIL APPROVAL ONLY

(e) earliest finish date (by calendar date)

(f) actual start date (by calendar date)

(g) actual finish date (by calendar date)

(h) latest start date (by calendar date)

(i) latest finish date (by calendar date)

(j) slack or float

(k) percentage of activity completed

4. The program shall be capable of accepting revised completion dates as modified by approved time adjustments and recomputations of all tabulation dates and float accordingly.

5. Submission and review of the system shall be as follows:

(a) The complete network analysis system, consisting of the detailed network mathematical analysis and network diagrams, shall be submitted within thirty (30) Days after receipt of the Notice to Proceed.

(b) The Contractor shall participate in a review and evaluation of the proposed network diagrams and analysis by the Director. Any revisions necessary as a result of this review shall be resubmitted for review by the Director within ten (10) Days. When completed, the favorably reviewed schedule shall then be the schedule to be used by the Contractor for planning, organizing and directing the Work and for reporting progress. If the Contractor thereafter desires to make significant changes in its method of operating and scheduling, the Contractor shall notify the Director in writing stating the reasons for the change.

(c) The Contractor shall submit at monthly intervals a report of the actual construction progress. Each monthly report shall cover a period of approximately thirty

FOR COUNCIL APPROVAL ONLY

(30) Days ending around the 20th of each month. The monthly reports shall be submitted within ten (10) Days of the end of the reporting period.

(1) If the project is proceeding on schedule, the monthly update report may consist of a marked-up copy of the graphical network diagram. This submittal shall clearly indicate the status of any minor shifts in sequence or schedule and the estimated completion date or percent complete of all activities currently in progress. The Contract completion date shall also be indicated. The Contractor shall submit a narrative report relating to status of construction, the schedule, and factors which may affect the remainder of the schedule. The report shall show the activities or portions of activities completed during the reporting period. The report shall state the percentage of the Work actually completed and scheduled as of the report date and the progress along the critical path in terms of Days ahead or behind the allowable dates.

(2) If, in the opinion of the Director, the project is behind schedule, the monthly report shall include a revised network diagram and/or mathematical analysis showing the Contractor's proposed revised schedule. An analysis of the effect that the delay has on progress along other paths shall also be included in the report. The Contractor shall also submit a narrative report with each updated analysis which shall include but not to be limited to a description of current and anticipated problem areas, delaying factors and their impact, and an explanation of corrective actions taken or proposed.

(3) Periodic report shall be submitted in sufficient copies to cover Contractor needs plus five (5) copies and an available electronic copy to be retained by the Director.

FOR COUNCIL APPROVAL ONLY

6. To the extent that the favorably reviewed initial Construction Schedule, or revisions thereto, indicate anything not jointly agreed upon, it shall be deemed to be not favorably reviewed by the Director. Any omission of Work from the detailed schedule, otherwise required for Contract compliance, will not excuse the Contractor from completing such Work within any applicable completion date. The CPM schedule shall be generated by computer methods.

C. Schedule Review. Once each month, on a date mutually agreed upon, but no later than seven (7) business days after the monthly schedule progress report date, a Work Site meeting will be held to review the Construction Schedule and job progress. The Contractor shall also attend weekly meetings scheduled by the Director to review the progress of the Work in the preceding week and in the subsequent week, coordinate the Work with public agencies or other Contractors as required, and allow the Director to plan his or her activities for testing, inspection, etc.

D. Schedule Revisions. The conditions under which the Director will require revisions of the Construction Schedule include the following:

1. When delay in completion of any Work item or sequence of Work items results in an estimated extension of project completion by either twenty (20) business days or by ten percent (10%) of the remaining duration of time to complete the Contract, whichever is less.

2. When delays in Submittals or deliveries make replanning or rescheduling of the Work necessary.

3. When the schedule does not represent actual prosecution and progress of the Work.

FOR COUNCIL APPROVAL ONLY

4. When any change to the sequence of activities, the completion date for major portions of the Work, or when changes occur which affect the critical path.

5. When Contract Amendments or a Change Order necessitates schedule revision, the Contractor shall submit a schedule analysis of all Change Order Work with its proposal.

E. Cash Flow Projection. A cash flow projection shall be submitted with the Construction Schedule. This cash flow projection shall be revised and resubmitted when revisions of the Construction Schedule will result in changes to the projected cash flow.

F. Schedules showing project completion dates earlier than specified in the Supplemental Conditions will be rejected unless justification can be provided for early completion.

6-1.05 **SCHEDULE OF VALUES.** Prior to preparation of the first estimate for a progress payment, the Contractor shall submit for favorable review by the Director a detailed Schedule of Values or cost breakdown of the Work under each bid item awarded. The breakdown will then become the basis for partial payment determination. Elements of Work shall be grouped by structure, pipeline, system, etc. Within each grouping, Work should be itemized by readily measurable quantities of Work complete in place. For example, concrete should be in units of cubic yards including form Work and reinforcing steel. Move-on costs, bond and insurance costs, and Overhead costs shall not be considered an item of cost for this purpose but shall be prorated over items of Work. In the event the Schedule of Values is not favorable reviewed by the Director, another Schedule of Values shall be submitted that is mutually acceptable to the Contractor and the Director.

6-1.06 **CITY'S RIGHT TO STOP WORK.** The Director shall have the

FOR COUNCIL APPROVAL ONLY

authority to order the Contractor, in writing, to suspend the Work wholly or in part, for such period as the Director may deem necessary due to the failure on the part of the Contractor to correct Work that is not in accordance with the requirements of the Contract Documents or if Contractor persistently fails to carry out Work in accordance with the Contract Documents.

The Contractor shall immediately comply with the written order of the Director to suspend the Work wholly or in part. The suspended Work shall be resumed when conditions are favorable and methods are corrected, as ordered or approved in writing by the Director.

Any stoppage of work under this section shall be at the Contractor's sole expense, and the Contractor shall have no claim against the City based on the Contractor's failure to perform the Work in accordance with the Contract Documents.

In addition to the City's right to stop Work, the City may order the Contractor to submit to the City at no additional cost to the City, additional information concerning Contractor's planned Work if the Contractor fails to promptly correct Work that is not in accordance with the requirements of the Contract Documents or persistently fails to carry out Work in accordance with the Contract Documents. The additional information ordered by the City may include, but is not limited to, preparation of Submittals or Working Drawings not otherwise required to be submitted under the Contract Documents.

In the event the City discovers that the Contractor has created an unsafe condition the City may arrange for other work forces to remedy the condition. Such remedial work shall be at the sole discretion of the City. If this action is required, the City may unilaterally terminate Work under the Contract, and will pay only for the quantities of Work actually performed, less the cost of the City's remedial Work. In the event that Work is not halted, the Contractor must take immediate steps to correct the situation. There will be no extra payment for Work required

FOR COUNCIL APPROVAL ONLY

to correct unsafe conditions.

The right of the City to suspend the Work shall not give rise to a duty on the part of the City to exercise this right for the benefit of the Contractor or any other person or entity. This right shall be in addition to and not in restriction or derogation of the City's other rights under the Contract Documents.

In the event of a suspension of Work under any of the conditions set forth in this Section 6-1.06, such suspension of Work shall not relieve the Contractor of its legal responsibilities as set forth in these General Conditions.

6-1.07 **TIME OF COMPLETION.** The Contractor shall complete the entire Work, including Installation, repairs, startup, troubleshooting, painting, and touchup, training, submittal or record drawings, and manuals, cleanup, demobilization, and all other Work within the number of Days set forth in the Supplemental Conditions. The time for completion includes an allowance for working time lost due to normal inclement weather.

Extensions of time may be allowed for unusual inclement weather under the provisions hereinafter described. Unusual inclement weather is weather which adversely affects "controlling" operations or the critical path of construction and which meets one of the following criteria:

A. For the particular calendar month in question, the number of individual Days with rainfall exceeding 0.10 inches exceeds the average number of such Days for that month over the immediately preceding five (5) years of record by at least three (3) Days.

B. For the particular calendar month in question, the total cumulative rainfall for that month exceeds the average cumulative rainfall for that month over the immediately preceding five (5) years of record by at least two inches (2").

FOR COUNCIL APPROVAL ONLY

Rainfall shall be measured at a publicly operated, maintained, and reported station in reasonable proximity to the construction site. A claim for delay shall indicate the period of rainfall which is claimed as "unusual," the specific dates during which the unusual rainfall and subsequent wet soil conditions prevented Work, and the specific critical path tasks adversely affected by such unusual weather. A claim for delay due to unusual inclement weather shall be filed within ten (10) Days of the apparent end of the unusual inclement rainfall period, whether or not the monthly totals are available at that time. The burden of proof that weather meets the criteria for unusual weather shall be solely the responsibility of the Contractor.

It is the responsibility of the Contractor to order materials required for the Work properly and promptly on a Notice to Proceed. If evidence presented demonstrates that, in spite of the Contractor's efforts, government-established priorities controls delay material deliveries, suitable extension of time will be made.

If performance of extra Work ordered by the City or failure of the City to provide the necessary site for Installation affects construction tasks which are "controlling" or which are on the "critical path" of the Construction Schedule, suitable extensions of time will be made.

The Contractor shall not be entitled to a time extension for delays in activities on non-critical paths of the favorably reviewed schedule unless the duration of the excusable delay exceeds the total float of the activities being delayed. If the duration of an excusable delay does exceed the total float of the activities affected by the delay, the Contractor shall be entitled to an extension equal to the difference.

C. Determination that a day is a non-working day by reason of inclement weather or conditions resulting immediately therefrom, shall be made by the Director.

6-1.08 **LIQUIDATED DAMAGES.** It is agreed by the parties to the Contract

FOR COUNCIL APPROVAL ONLY

that in case all the Work called for under the Contract in all parts and requirements is not completed within the number of Days as set forth in the Supplemental Conditions, damage will be sustained by the City and that it is and will be impracticable and extremely difficult to ascertain and determine the actual damage which the City will sustain in the event of and by reason of such delay; and it is therefore agreed that the Contractor will pay to the City, the monetary amount indicated in the Supplemental Conditions in dollars (U.S.) per day for each and every calendar day of delay in completing the Work in excess of the number of Days prescribed and the number of additional calendar days, if any, authorized by Contract Change Order; and the Contractor agrees to pay said Liquidated Damages herein provided for, and further agrees that the City may deduct the amount thereof from any moneys due or that may become due the Contractor under the Contract.

It is further agreed that in case the Work is not finished and completed in all parts and requirements within the number of Days specified, the City shall have the right to increase the number of Days or not, as it may deem best to serve the interest of the City, and if it decides to increase the said number of Days, it shall further have the right to charge to the Contractor, its heirs, assigns or sureties and to deduct from the final payment for the Work all of any part, as it may deem proper, of the actual cost of engineering, inspection, superintendence, and other Overhead expenses which are directly chargeable to the Contract, and which accrue during the period of such extension, except that cost of preparation of final statement shall not be included in such charges.

6-1.09 **DELAYS AND EXTENSIONS TO THE WORK.** The Contractor must complete all Work within the time specified in the Agreement. The Contractor will be granted an extension of time and will not be assessed with liquidated damages or the cost of engineering

FOR COUNCIL APPROVAL ONLY

and inspection for any delay in substantially completing the Work (or parts thereof) beyond the time set forth in the Agreement, provided that such delay was caused by unforeseeable causes beyond the control and without the fault or negligence of the Contractor. Examples of such causes include acts of public enemy, fire, floods, abnormal weather (as described below), earthquakes, epidemics, quarantine restrictions, strikes, labor disputes and freight embargoes, fire, changes made pursuant to the provisions of "Changes in the Work" under Section 3 of these General Conditions or acts or neglect of the City not contemplated by the Contract Documents. In all cases, any extension of time is conditioned on the following:

1. That the cause is not due to the fault or negligence of the Contractor, and the Contractor has taken reasonable precautions to prevent and minimize the effects thereof; and

2. That the Contractor notifies the Director in writing within three (3) Days from the beginning of such delay specifying the nature of the delay and the measures that have been or will be taken to prevent or minimize the delay. Failure to submit written notice within this time period shall constitute an absolute waiver of any claim for a time extension.

No extension of time will be granted for a delay caused by a shortage of materials, unless the Contractor furnishes to the City documentary proof that it has diligently made every effort to obtain such materials from all known sources within reasonable reach of the work and further proof, as acceptable to the Director, that the inability to obtain such materials when originally planned did in fact cause a delay in Final Completion of the entire Work which could not be compensated for by revising the sequence of the Contractor's operations. Only the physical shortage of material will be considered as a cause for extension of time, and no consideration

FOR COUNCIL APPROVAL ONLY

will be given to any claim that material could not be obtained at a reasonable, practical or economical cost or price, unless it is shown to the satisfaction of the City that such material could have been obtained only at exorbitant prices entirely out of line with current rates, taking into account the quantities involved and the usual practices in obtaining such quantities.

No extension of time will be granted for a delay caused by Contractor's staff turnovers, understaffing or insufficient quantity of qualified staff able to perform the necessary work.

The term "shortage of materials," as used in this section, shall apply only to materials, articles, parts or equipment which are standard items and shall not apply to materials, parts, articles or equipment which are processed, made, constructed, fabricated or manufactured to meet the specific requirements of the Contract Documents.

No extensions of time will be granted for delays that have no measureable impact on the completion of the Work (or parts thereof) under the Contract Documents. When extensions of time are granted, they will be limited to the period equivalent to the actual number of Days lost on the critical path or controlling operations of the Construction Schedule, taking into account the extent to which that delay could be decreased by reasonable mitigation measures by the Contractor. All requests for extensions of time must be supported with a critical path analysis showing the critical path and impacts to it. Contractor's failure to submit this analysis will be sufficient cause for denial of any request for a time extension.

Within a reasonable period of time after the Contractor submits the notice and information required by this section, the City will determine whether an extension of time is justified and, if so, the number of days for the extension.

Abnormal weather may be a valid basis for a time extension under the Agreement. "Abnormal Weather" occurs when the number of days of rain above 0.5 inches in a 24 hour

FOR COUNCIL APPROVAL ONLY

period exceeds the average for such rainfall in a particular month as determined by the National Weather Service. The Contractor will only be entitled to, at most, a time extension for the number of days of rain exceeding the average for that month in the locale where the Work is to be performed. If delays are caused by the Contractor or those for whom the Contractor is responsible, the Contractor will only be entitled to, at most, a time extension for the number of rain days exceeding the average for the month when the Work should have been performed.

In addition, before a time extension may be granted for abnormal weather, the Contractor must establish that the rain either significantly impacted at least sixty percent (60%) of the planned work of the controlling operations for a particular day or prohibited at least five (5) hours of work on the controlling operations planned for that day. Contractor shall employ reasonably methods to mitigate the impact of abnormal weather (i.e., dewatering, protection of site, etc.) The occurrence of rain during non-work hours or having minimal impact to work on the controlling operation shall not constitute a day of abnormal weather.

In the event that the project experiences favorable weather for a particular month (e.g., the number of actual rain days in a month less than that indicated above for allowable rain days per months), the additional float resulting from such favorable weather shall accrue to the project.

Any Contractor claim for damages or additional compensation based on delay shall be limited to only those circumstances where the Contractor has fulfilled each of the following three (3) requirements:

1. Contractor has established its entitlement to a time extension pursuant to the provisions described above regarding delay and extensions to the Work.
2. The delay was caused solely by the City's issuance of changes made pursuant to the

FOR COUNCIL APPROVAL ONLY

provisions of "Changes in the Work" under Section 3 of these General Conditions or by acts or neglect of the City.

3. The delay was unreasonable under the circumstances and not within the contemplation of the parties.

It is expressly understood and agreed that delays caused by the City will be non-compensable when there are concurrent delays caused by the Contractor. Also, the Contractor shall have no entitlement to additional compensation for any delay where there have been concurrent delays caused by non-compensable delays, including, but not limited to, fire, floods, earthquakes, epidemics, quarantine restrictions, strikes, labor disputes, and freight embargoes.

Contractor's damages and/or additional compensation for delays will consist solely of the extended costs of maintaining the Contractor's Work Site presence. The Contractor will not be entitled to any extended home office overhead.

Compensation for idle time of equipment will be determined in the same manner as determinations are made for equipment used in the performance of extra work paid for on a Force Account basis with the following exceptions:

1. The time for which compensation will be paid will be the actual normal working hours during which such delay conditions exists, but in no case will exceed eight (8) hours in any one day.
2. The days for which compensation will be paid will be each calendar day of the work week (defined elsewhere in the Contract Documents) and Legal Holidays, during the existence of such delay, except that when rental of the equipment is paid for under the provisions in Section 3-1.06C, "Force Account Payment – Equipment," of these General Conditions, no payment will be made for delays in accordance with the

FOR COUNCIL APPROVAL ONLY

provisions of this section.

Actual loss shall be understood to include no items of expense other than idle time of personnel, cost of extra moving of equipment, and cost of longer hauls. Compensation for idle time of equipment will be determined as provided in this section and compensation for idle time of personnel will be determined pursuant to Section 3-1.06A, "Force Account Payment – Labor," of these General Conditions. No markup will be added in either case for Overhead and profit. The cost of extra moving of equipment and the cost of longer hauls will be paid for as extra work as provided pursuant to "Changes to the Work" elsewhere in the Contract Documents.

6-1.10 **TERMINATION.**

6-1.10A **TERMINATION OF AGREEMENT – CONVENIENCE OF CITY.** The Department reserves the right to terminate the Contract at any time and for any reason if the Director determines that to do so would be in the best interest of the City. Any termination which is not based on the circumstances set forth in Section 6.1-10B below shall be effected by delivery to the Contractor of a Notice of Termination specifying the extent to which performance of Work under the Contract is terminated, and the date upon which such termination becomes effective.

Upon the Contractor's receipt of a written Notice of Termination for convenience, the Contractor shall cease Work as to those portions of the project so terminated and shall undertake the steps outlined in Section 6-1.10B below.

1. Acceptance of the Contract as hereinafter specified shall not relieve the Contractor of responsibility for damage to materials except as follows:

   a. The Contractor's responsibility for damage to materials for which partial payment has been made as provided in Section 7-1.07, "Progress

FOR COUNCIL APPROVAL ONLY

Payments," of these General Conditions and for materials furnished by the City for use in the Work and unused shall terminate when the Director certifies that such materials have been stored in the manner and at the locations he or she has directed.

b. The Contractor's responsibility for damage to materials purchased by the City subsequent to the issuance of the notice that the Contract is to be terminated shall terminate when title and delivery of such materials has been taken by the City.

c. When the Director determines that the Contractor has completed the Work under the Contract directed to be completed prior to termination and such other Work as may have been ordered to secure the project for termination, the Contractor will recommend that the City formally accept the Work, and immediately upon and after such Acceptance by the City, the Contractor will not be required to perform any further Work thereon and shall be relieved of its contractual responsibilities for injury to persons or damage to property which occurs after the formal Acceptance of the project by the City.

2. The total compensation to be paid to the Contractor shall be determined by the Director on the basis of the following:

a. The reasonable cost to the Contractor, without profit, for all Work performed under the Contract, including mobilization, demobilization and Work done to secure the project for termination. Reasonable cost will include a reasonable allowance for project Overhead and general

FOR COUNCIL APPROVAL ONLY

administrative Overhead not to exceed a total of seven percent (7%) of Direct Costs of such Work.

b. A reasonable allowance for profit on the cost of the Work performed as determined under subsection (a), provided the Contractor establishes to the satisfaction of the Director that it is reasonably probable that it would have made a profit had the Contract be completed and provided further, that the profit allowed shall in no event exceed four percent (4%) of said cost.

c. The reasonable cost to the Contractor of handling material returned to the vendor, delivered to the Department or otherwise disposed of as directed by the Director.

d. A reasonable allowance for the Contractor's administrative costs in determining the amount payable due to termination of the Contract.

All records of the Contractor and the Contractor's Subcontractors, necessary to determine compensation in accordance with this Section, shall be open to inspection or audit by representatives of the Department at all times after issuance of the notice that the Contract is to be terminated and for a period of three (3) years, and such records shall be retained for that period.

After Acceptance of the Work by the Director, the Director may make payments on the basis of interim estimates pending issuance of the Final Statement, when in his or her opinion the amount thus paid, together with all amounts previously paid or allowed, will not result in total compensation in excess of that to which the Contractor will be entitled. All payments, including payment upon the Final Statement, shall be subject to deduction for prior payments and amounts, if any, to be kept or retained under the provisions of the Contract.

FOR COUNCIL APPROVAL ONLY

In the event that the City terminates this Contract under Section 6-1.10B below and it is determined for any reason that there was not sufficient cause to do so, the City's termination automatically will convert to a termination for convenience under this section and the terms and conditions outlined in this section automatically will be applied to effectuate the Contract termination. Thus, damages to which a Contractor may be entitled as a result of an improper default termination will be limited to the amounts provided for in this section.

The provisions of this section shall be included in all subcontracts.

6-1.10B **TERMINATION OF AGREEMENT - FOR CAUSE.** An "Event of Default" as referred to in this section shall occur if the Contractor:

1. Fails to maintain progress of the Work in accordance with the requirements of the Contract Documents; or
2. Fails to prosecute the Work or any of its components in accordance with the Contract Documents; or
3. Persistently or repeatedly fails or refuses to supply sufficient properly skilled workers or proper material to permit the performance of the Work in accordance with the Contract Documents; or
4. Fails to make prompt payment to Subcontractors or Suppliers in accordance with the respective agreements between the Contractor and the Subcontractor and Contractor and Supplier; or
5. Fails to comply with applicable laws, ordinances or rules, regulations or orders of a public authority having jurisdiction over the Work; or
6. Abandons, assigns or sublets the Contract without approval of the City; or
7. Becomes bankrupt or is subject to appointment of a receiver on behalf of the

FOR COUNCIL APPROVAL ONLY

Contractor; or

8. Otherwise is guilty of a substantial breach of a provision of the Contract Documents.

Upon the City's reasonable belief that there has been an Event of Default by the Contractor, the City may elect to give the Contractor written notice thereof. The Contractor thereafter shall cure the default as soon as possible and in no event after ten (10) Days from the Contractor's receipt of the City's written notice.

If the Contractor does not timely cure its default, the City may, without waiver of any of its other rights and remedies, elect to terminate the Contract, or portion thereof.

Upon the City's election to terminate the Contract, or portion thereof, the City shall have the right to complete the Work, or portion involved, by whatever means and methods it deems expedient, including the hiring of others on such terms as the City deems advisable. The City shall have the right to take possession of the Contractor's materials, plant, tools, equipment and property of any kind provided by or on behalf of the Contractor for the purpose of the Work, or a portion of them, without being responsible to the Contractor for wear and tear. The Contractor shall have no rights in such property during its use by the City. The City shall not be required to obtain the lowest prices for completing the Work or a portion of it but shall make such expenditures as, in the City's sole judgment, best accomplish such completion.

The expense of completing such Work or portion thereof, together with a reasonable charge for engineering, managerial and administrative services, as certified by the City, shall be charged to the Contractor, and the expense so charged shall be deducted by the City out of such monies as may be due or may at any time thereafter become due to the Contractor. In case such expense is more than the sum which otherwise would have been payable to the Contractor under the Agreement, then the Contractor or its surety or sureties shall promptly pay the amount of

FOR COUNCIL APPROVAL ONLY

such excess so due. When the City terminates the Contract under this section, the Contractor shall not be entitled to receive any further payments until the Work is completed and there has been a final settlement of costs of completing the Work covered by such notice of default.

The City will issue to the Contractor a written notice specifying that the Contract, or portion thereof, is terminated. Upon receipt of said written notice and, except as otherwise directed in writing by the City, the Contractor shall:

1. Stop all Work under the Contract; or if partial termination, stop Work relating to the terminated portion of the Agreement;
2. Perform Work the City deems necessary to secure the Work Site for termination including measures to leave the Work Site in a safe condition;
3. Remove equipment from the site of Work, as specified by the City;
4. Take such action as is reasonably necessary to protect materials from damage;
5. Notify all Subcontractors and Suppliers that the Contract or portion thereof is being terminated and that their contracts or orders are not to be further performed unless otherwise authorized in writing by the City;
6. Provide the City with an inventory list of all materials previously produced, purchased or ordered from Suppliers for use in the Work and not yet used in the Work, including its storage location, and such other information as the City may request;
7. Dispose of materials not used in the Work as directed by the Director. It shall be the Contractor's responsibility to provide the City (a) with good title to all materials purchased by the City hereunder, including materials for which partial payment has been made by the City and (b) with bills of sale or other documents of title for such

FOR COUNCIL APPROVAL ONLY

materials;

8. Subject to the prior written approval of the City, settle all outstanding liabilities and all claims arising out of Subcontractors or orders for materials terminated hereunder. To the extent directed by the City, the Contractor shall assign to the City all rights, title and interests of the Contractor under subcontracts or orders for materials terminated hereunder. The City shall be at liberty to negotiate with and engage any Subcontractors who had contracted with the Contractor for the Work;
9. Furnish the City with the documentation required to be furnished by the Contractor under the provisions of the Contract Documents, including, on projects as to which Federal funds are involved, all documentation required under the Federal requirements included in the Agreement; and
10. Take such other actions as the City may direct.

If only a portion of the Work has been terminated, the Contractor shall perform the remainder of the Work in conformity with the Contract Documents and in such a manner as not to interfere with the City or others in their performance and completion of the portion of the Work which was terminated.

The City may recover from the Contractor the amount of any loss or damage, including consequential damages, suffered or incurred as a result of the Contractor's default.

FOR COUNCIL APPROVAL ONLY

SECTION 7

ACCEPTANCE AND PAYMENT

7-1.01 **ACCEPTANCE.** When the Contractor believes that the entire Work is fully and finally completed, including the satisfactory completion of inspections, tests, and documentation specified in the Contract Documents and completion of all punch list and clean-up items, the Contractor shall submit to the City a written request for final Acceptance within fifteen (15) Days thereafter, specifying that the Work is fully and finally completed and the date on which it was completed. Within thirty (30) Days after receipt of the request for final Acceptance, the City will inspect the Work and will either:

1. Reject the request for final Acceptance, specifying the defective and/or uncompleted portions of the Work; or
2. Notify the Contractor that the Work will be accepted by Resolution of the City Council of the City of Roseville, and a Notice of Completion will be caused to be recorded by the City Clerk; or
3. Notify the Contractor that the Work has been accepted by the City but no Notice of Completion will be recorded.

If the City rejects the request for final Acceptance, the Contractor shall promptly remedy the defective and/or uncompleted portions of the Work. Thereafter, the Contractor shall again submit a written request for final Acceptance of the Work, specifying a new date based on the date the defective and/or uncompleted portions of the Work were corrected. Thereafter, the foregoing procedure shall apply successively until the City has verified that the Work is fully and finally completed and accepted the Work by Resolution of the City Council or by written

FOR COUNCIL APPROVAL ONLY

notification from the Director. Immediately upon such Acceptance, the Contractor shall be relieved of the duty of maintaining the Work as a whole.

All warranties commence upon final Acceptance of the Work. The City's final Acceptance of the Work shall not be construed as an acceptance by the City of any latent defects discovered with regard to the Contractor's work. Furthermore, Contractor's obligations under Section 5-1.22 "Responsibility for Damage and Indemnification" shall still remain applicable after the City's grant of final Acceptance of the Work.

Prior to final Acceptance, the Contractor shall submit to the City the Record Documents and Operation and Maintenance Manuals as specified in the Contract Documents.

7-1.02 **SCOPE OF PAYMENT.** The Contractor shall accept the compensation provided in the Contract as full payment for furnishing all labor, materials, tools, equipment, and incidentals necessary to the completed Work and for performing all Work contemplated and embraced under the Contract; also for loss or damage arising from the nature of the Work, or from the action of the elements, or from any unforeseen difficulties which may be encountered during the prosecution of the Work until the Acceptance by the Director and for all risks of every description connected with the prosecution of the Work, also for all expenses incurred in consequence of the suspension or discontinuance of the Work as provided in the Contract; and for completing the Work according to the Contract. Neither the payment of any estimate nor of any retained percentage shall relieve the Contractor of any obligation to make good any defective Work or material.

No compensation will be made in any case for loss of anticipated profits.

7-1.03 **NOTICE OF POTENTIAL CLAIM.** The Contractor shall not be entitled to the payment of any additional compensation for any act or failure to act by the City,

FOR COUNCIL APPROVAL ONLY

including failure or refusal to issue a Change Order, or for the happening of any event, thing, occurrence or other cause unless the Contractor has given the City due written Notice of Potential Claim as hereinafter specified, provided, however, that compliance with this Section 7-1.03 shall not be a prerequisite as to matters within the scope of the notice provisions in Section 6-1.07, "Time of Completion," or the notice provisions in Section 6-1.08, "Liquidated Damages," of these General Conditions, nor to any claim which is based on differences in measurement or errors of computation as to correct quantities.

The written Notice of Potential Claim shall set forth the reasons for which the Contractor believes additional compensation will or may be due, the nature of the costs involved, and, insofar as possible, the amount of the potential claim. The said Notice as above required must have been given to the Director prior to the time that the Contractor shall have performed the Work giving rise to the potential claim for additional compensation, if based on an act or failure to act by the Director, or in all other cases within seven (7) Days after the happening of the event, thing, occurrence or other cause giving rise to the potential claim.

If the Notice of Potential Claim does not include complete information about the claim or the parties do not execute a Contract Change Order in connection with the Notice of Potential Claim, Contractor shall submit complete information about its claim for additional compensation and/or extension of time for performance within fifteen (15) Days after such work is performed. Failure to provide written notice of claim prior to undertaking such work or failure to timely submit a complete and specific information about the claim for additional compensation and/or extension of the time for performance shall be deemed a waiver and abandonment of such claim.

If there is a dispute over any claim, the Contractor shall continue to Work during the dispute resolution process in a diligent and timely manner as directed by the City, and shall be

FOR COUNCIL APPROVAL ONLY

governed by all applicable provision of the Agreement.

The Contractor shall maintain cost records of all Work that is the basis of any dispute. On a daily basis, Contractor shall submit to City completed daily forms, the format of which will be acceptable to the City, with respect to the Contractor's costs of performing the disputed work. These daily forms shall itemize all of Contractor's costs in performing the disputed work, including, but not limited to, all costs relating to materials, labor and equipment with respect to the disputed work. These daily forms shall provide names or identification and classification of affected workers, the hourly rate of pay and hours worked, and also the size, type, and identification number of equipment and hours operated. Said daily work forms shall be duly signed and verified by the Contractor or its authorized representative. The City's receipt of the Contractors' daily forms shall not constitute an approval of the Contractor's claim. Contractor's failure to submit the daily forms on a daily basis shall constitute a waiver of the Contractor's right to claim any additional compensation for the disputed work.

Each Contractor claim shall include full and complete information concerning the Claim. Contractor shall provide a clear, concise recital of the basis, upon which the claim is asserted, including a designation of the provisions of the Contract Documents upon which the claim is based. Contractor shall also include a statement as to the amount of time and/or compensation sought pursuant to the claim; if Contractor's claim arises from an ongoing occurrence, Contractor shall so state in its claim, including a description of the specific Work activities affected by the claim. All costs, expenses or damages and extensions of time claimed shall be described in reasonable detail under the circumstances together with complete supporting documentation.

The City will review any timely Notice of Potential Claim and supporting information

FOR COUNCIL APPROVAL ONLY

submitted by Contractor. In conducting this review, the City shall have the right to require the Contractor to submit such additional or supporting documents, data and other information as the City may require.

If an agreement can be reached which resolves the Contractor's claim, the parties will execute a Contract Change Order to document the resolution of the claim. If the parties cannot reach agreement with respect to the Contractor's claim, the Contractor shall still be obligated to comply with the claim identification provisions identified in these General Conditions, including but not limited to Section 7-1.04.

It is the intention of this Section 7-1.03 that differences between the parties arising under and by virtue of the Contract be brought to the attention of the Director at the earliest possible time in order that such matters may be settled, if possible, or other appropriate action promptly taken. The Contractor hereby agrees that it shall have no right to additional compensation for any Claim that may be based on any such act, failure to act, event, thing or occurrence for which no timely written Notice of Potential Claim as herein required was filed.

7-1.04 **CLAIMS.** Contractor must submit all Claims, for which it has previously submitted a Notice of Potential Claim, prior to Acceptance of the Work. Each such Claim must be sent to the City by registered mail or certified mail with return receipt requested and must contain reasonable documentation to support the Claim.

Upon receipt of a Claim, the City shall conduct a reasonable review of the Claim and, within a period not to exceed forty-five (45) Days, or such further time as mutually agreed upon or necessary pursuant to Public Contract Code Section 9204, the City shall provide the Contractor a written statement identifying what portion of the Claim is disputed and what portion is undisputed. If the City does not respond to a Claim from the Contractor within the time

FOR COUNCIL APPROVAL ONLY

specified herein, such Claim shall be deemed rejected in its entirety.

Any payment due on an undisputed portion of the Claim shall be processed and made within sixty (60) Days after the City issues its written statement.

If the Contractor disputes the City's written response, or if the City does not respond within the time specified herein, the Contractor may demand in writing an informal conference to meet and confer for settlement of the issues in dispute. Upon receipt of a demand in writing sent by registered mail or certified mail, return receipt requested, the City shall schedule a meet and confer conference within thirty (30) Days for settlement of the dispute.

Within ten (10) business days following the conclusion of the meet and confer conference, if the claim or any portion of the claim remains in dispute, the City shall provide the Contractor a written statement identifying the portion of the Claim that remains in dispute and the portion that is undisputed. Any payment due on an undisputed portion of the Claim shall be processed and made within sixty (60) Days after the City issues its written statement. Any disputed portion of the Claim, as identified by the Contractor in writing, shall be submitted to nonbinding mediation, with the City and the Contractor sharing the associated costs equally. The City and the Contractor shall mutually agree to a mediator within ten (10) business days after the disputed portion of the Claim has been identified in writing. If the parties cannot agree upon a mediator, each party shall select a mediator and those mediators shall select a qualified neutral third party to mediate with regard to the disputed portion of the Claim. Each party shall bear the fees and costs charged by its respective mediator in connection with the selection of the neutral mediator. If mediation is unsuccessful, the parts of the Claim remaining in dispute shall be resolved in accordance with Section 7-1.05 below.

7-1.05 **DISPUTE RESOLUTION PROCEDURE.** All Claims not resolved

FOR COUNCIL APPROVAL ONLY

pursuant to Section 7-1.04, shall be resolved pursuant to Public Contract Code Section 10240, et seq.

7-1.06 **STOP PAYMENT NOTICES.** The City, by and through the Department or other appropriate office or officers, may at its option and at any time retain out of any amounts due the Contractor, sums sufficient to cover claims, filed pursuant to Civil Code Section 9350, et seq., including an amount to provide for the reasonable cost of any litigation thereunder.

7-1.07 **PROGRESS PAYMENTS.** Within fifteen (15) Days after the effective date in the Notice to Proceed, but in any event prior to Contractor's first Application for Payment, the Contractor shall submit to the City a detailed Schedule of Values.

Upon its approval, the Schedule of Values will form a basis for determining the compensation payable to the Contractor based on its actual progress of Work with respect to each Lump Sum bid item. The City, prior to any progress payment being made, must approve the Schedule of Values.

At the Director's discretion the approved Schedule of Values may be used as the basis for calculating the adjustment in compensation for a lump sum bid item due to changes ordered by the Director. When an ordered change increases or decreases the quantities shown in an approved Schedule of Values, at the Director's discretion, the adjustment in compensation may be determined in the same manner specified for increases and decreases in the quantity of a bid item of work in accordance with Section 3-1.05(B), "Contract Price Adjustment," of these General Conditions.

The Contractor once in each month shall submit an Application for Payment, for approval by the Director. Contractor's Applications shall be based on the Schedule of Values submitted to the City. These applications shall be supported by: (1) documentation requested by the City to

FOR COUNCIL APPROVAL ONLY

substantiate the payment request; (2) statutory releases from Contractor and all Subcontractors and suppliers pursuant to Civil Code Sections 8132 and 8138; and (3) certified payroll records for the period for which payment is requested. Specifically, the Contractor will submit conditional waivers upon progress payment executed by all contractors and suppliers that will be receiving sums sought in the instant payment request and also submit unconditional waivers upon progress payment executed by all contractors and suppliers that have been paid to the date of the payment request. The Contractor shall certify that the Work for which payment is requested has been accomplished. When requested by the City, the Contractor shall submit receipts, invoices and other documentation that the City requires to be furnished for purpose of evaluating the application.

The City will pay the Contractor within thirty (30) Days after its receipt of an undisputed and properly submitted Application for Payment, after deducting all previous payments, retention, and other sums as described in the Contract Documents. Within seven (7) Days of its receipt of the Contractor's Application for Payment, the City will determine whether it complies with the provisions of the Contract Documents. As appropriate, the City will return the application to the Contractor accompanied by a document prepared by the City setting forth the reasons for the rejection. Thereafter, the Contractor shall correct and resubmit the Application for Payment. Progress payments may be withheld for Work that is not performed in accordance with the Contract Documents.

The City may deduct the following from each progress payment:

1. An amount equal to one hundred and twenty-five percent (125%) of the amount claimed under any stop payment notice or other lien filed against the Contractor, which includes an amount to provide for the reasonable cost of any litigation

FOR COUNCIL APPROVAL ONLY

thereunder.

2. Any Liquidated Damages or Assessments that have accrued as of the date of the Application for Payment.
3. Any sums expended by the City in performing any of the Contractor's obligations under the Agreement that the Contractor has failed to perform.
4. Any other sums that the City is entitled to recover from the Contractor under the terms of the Contract including damages to the City's property.
5. The failure of the City to deduct any of the above identified sums from a progress payment shall not constitute a waiver of the City's right to such sums.

No such estimate or payment shall be construed to be an acceptance of any defective Work or improper materials.

Under no circumstances will the City make payment to unlicensed Contractors. As a condition of payment, the Contractor is required to maintain the applicable Contractor's license as identified in the Notice to Contractors for the duration of the Work.

7-1.08 **PAYMENT FOR MATERIALS AND EQUIPMENT ON HAND.**

Partial payments may be made to the extent of seventy-five percent (75%) of the cost of materials and equipment plus delivery to be incorporated in the Work, provided that such materials and equipment meet the requirements of the Contract Documents and are delivered to acceptable sites on the plant site or at other sites in the vicinity that are acceptable to the City and only with the prior written approval by the City. Such delivered costs of stored or stockpiled materials and equipment may be included in the next progress payment after the following conditions are met:

A. Equipment and materials will only be eligible if given conditional or final

FOR COUNCIL APPROVAL ONLY

Acceptance by the Director and are in apparent compliance with favorably reviewed Submittals.

B. Only equipment or materials which have received favorable review of Shop Drawings will qualify.

C. The material or equipment has been stored or stockpiled adequately protected against damage in a manner acceptable to the Director at an approved site.

D. The Contractor has furnished the Director with acceptable evidence of the quantity and the quality of such stored or stockpiled materials or equipment with identification of where they will be incorporated into the project with Specification reference.

E. The Contractor has furnished the Director with satisfactory evidence that the material or equipment and transportation costs have been paid.

F. The Contractor has furnished the City legal title (free of liens or encumbrances of any kind) and lien releases to the material or equipment so stored or stockpiled.

G. The Contractor has furnished the City evidence that the material or equipment so stored or stockpiled is insured against loss by damage to or disappearance of such materials at any time prior to use in the Work.

It is understood and agreed that the transfer of title and the City payment for such stored or stockpiled materials or equipment shall in no way relieve the Contractor of its responsibility for furnishing and placing such materials or equipment in accordance with the requirements of the Contract Documents.

In no case will the amount of progress payments for materials or equipment on hand exceed the Contract Price for such materials or equipment or the Contract Price for the Contract item in which the material is intended to be used.

No partial payment will be made for stored or stockpiled living or perishable plant

FOR COUNCIL APPROVAL ONLY

materials.

The Contractor shall bear all costs associated with the progress payment of stored or stockpiled materials or equipment in accordance with the provisions of this Section.

7-1.09 **RETENTION ON PROGRESS PAYMENTS.** From each progress payment estimate, five percent (5%) will be deducted and held in retention by the City. The remainder, less any deductions described in Section 7-1.07, "Progress Payments," of these General Conditions, will be paid to the Contractor as progress payments.

Pursuant to Public Contract Code Section 22300, the successful Bidder may submit Securities in lieu of retention payments by the City. Upon the Contractor's request, the City will make payment of funds withheld from progress payments, pursuant to the requirements of California Public Contract Code Section 22300, if the Contractor deposits in escrow with the City or with a bank acceptable to the City, securities eligible for investment under California Government Code Section 16430, bank or savings and loan certificates of deposit, interest bearing demand deposit accounts, standby letters of credit, or any other security mutually agreed to by the Contractor and the City, upon the following conditions:

1. The Contractor shall bear the expenses of the City and the escrow agent in connection with the escrow deposit made.

2. Securities or certificates of deposit to be placed in escrow shall be of a value at least equivalent to the amounts of retention to be paid to the Contractor pursuant to this section.

3. Contractor shall enter into an escrow agreement satisfactory to the City, which agreement shall be substantially similar to the form provided in California Public Contract Code section 22300.

FOR COUNCIL APPROVAL ONLY

4. The Contractor shall obtain the written consent of the surety to such agreement.

7-1.10 **FINAL PAYMENT.** Final payment will be made only after Contractor has achieved Final Completion of the Work pursuant to the provisions of Section 7-1.01, "Acceptance," of these General Conditions. Before final payment can be made, the Contractor shall have furnished the City with the following:

1. All Record Documents, catalogues, instruction sheets and information as required by the Contract Documents.

2. Conditional Waivers and Releases Upon Final Payment executed by Contractor and all Subcontractors and Suppliers, as provided by Civil Code Section 8136. Unconditional Waivers and Releases Upon Final Payment, as provided in Civil Code Section 8138, executed by Contractor and all Subcontractors and Suppliers, must be provided for all Subcontractors and Suppliers that have been paid in full.

Within thirty (30) Days of the date of the City's Acceptance of the Work, the Contractor shall prepare and submit a Final Invoice, showing the proposed total amount due the Contractor, segregated by Bid item quantities, Change Order Work, and other basis for payments; deductions made or to be made for prior payment; and amounts previously retained. Prior invoices and payments shall be subject to correction in the proposed Invoice for Final Payment. Payments to the Contractor will be made only for actual quantities of the Contract items of work constructed in accordance with the Contract Documents.

The City will review the Contractor's proposed Final Invoice and necessary changes or corrections will be forwarded to the Contractor. Within ten (10) Days thereafter, the Contractor

FOR COUNCIL APPROVAL ONLY

shall submit a revised proposed Final Invoice incorporating changes or corrections made by the City together with any new claims resulting therefrom. Upon approval by the City, the corrected proposed Final Invoice will become the approval Final Invoice.

If agreements are reached on all questions regarding the Final Invoice, the City will pay the entire sum found due on the approved application. However, the City will withhold sums sufficient to pay all unsettled claims for which stop payment notices have been filed pursuant to Section 9350, et seq. of the California Civil Code, together with the reasonable cost of any litigation thereunder.

Final payment will be made within thirty (30) Days after receipt of an approved Final Invoice and other required Submittals referenced above or within sixty (60) Days after Acceptance of the work by the City, whichever is later, provided, however, that if an approved Final Invoice has not been submitted within sixty (60) Days after Acceptance of the Work by the City, the City may elect to make payment of sums not in dispute without prejudice to the right of either the City or the Contractor in connection with such disputed sums. Notwithstanding the foregoing, if a Notice of Completion is recorded, final payment shall not be made prior to the expiration of the thirty-five (35) calendar day lien period. The start of this lien period is the date the Placer County Recorder's Office records the Notice of Completion.

The City may withhold from the Final Payment an amount not to exceed one hundred fifty percent (150%) of any amount in dispute between the City and the Contractor.

The making of Final Payment shall not operate to release the Contractor or its sureties from obligations arising under the Contract, the Contract bonds and warranties as herein provided. Specifically, the making of final payment shall not constitute a waiver and release of claims by the City arising from:

FOR COUNCIL APPROVAL ONLY

1. Unsettled or future liens;

2. Failure of the Work to comply with the requirements of the Contract Documents;

3. The terms of any warranties required by or contained in the Contract Documents;

4. The right to any insurance proceeds or the right to make any insurance or bond claims;

5. Any claims with respect to Contractor's obligations of indemnity with respect to claims asserted by third parties; or

6. Any latent deficiencies with the Work or Contractor's fraud.

7-1.11 **CLERICAL ERRORS.** Notwithstanding the provisions of Section 7-1.10, "Final Payment," of these General Conditions, for a period of three (3) years after Acceptance of the Work, all estimates and payments made pursuant to said Section 7-1.10, are subject to correction for clerical errors in the calculations involved in the determination of quantities and payments. The Contractor and the City agree to pay to the other any sum due under the provisions of this Section 7-1.11, provided, however, if the total sum to be paid is less than $100, no such payment shall be made.

7-1.12 **WARRANTY.** Notwithstanding inspections and Acceptance by the City of Work furnished under the Contract Documents, the Contractor hereby unconditionally guarantees that all materials and equipment furnished will be of good quality and new, that the Work will be free from defects in workmanship and materials and that the Work will conform to the requirements of the Contract Documents. Work not conforming to these requirements, including substitutions not properly approved and authorized, may be considered defective.

FOR COUNCIL APPROVAL ONLY

This warranty by the Contractor is in addition to any warranties or guarantees required elsewhere in the Contract Documents. This warranty shall be in effect notwithstanding any disclaimers, or limiting or conditional terms contained in such separate warranties furnished by manufacturers or suppliers.

The Contractor hereby agrees to repair or replace any and all Work, together with any other adjacent Work which may be displaced in so doing, that may prove to be not in accordance with the requirements of the Contract or that may be defective in its workmanship or material during the greater of a period of one (1) year after Acceptance of the Work by the City or the period specified in the Special Conditions, without any expense whatsoever to the City, ordinary wear and tear and unusual abuse or neglect excepted.

The Contractor further agrees, that within ten (10) Days after being notified in writing by the Department of any Work not in accordance with the requirements of the Contract Documents or of any defects in the Work, the Contractor will commence and prosecute with due diligence all Work necessary to fulfill the terms of this warranty, and to complete such Work within a reasonable period of time. In the event Contractor fails to comply, it does hereby authorize the Department to proceed to have such Work done at the Contractor's expense and the Contractor will honor and pay the cost and charges therefore upon demand. The Department shall be entitled to all costs and expenses, including reasonable attorneys' fees, necessarily incurred upon the Contractor's refusal to honor and pay the above costs and charges.

All warranties set forth in the Contract Documents shall be deemed cumulative and not alternative or exclusive. Nothing contained in this section shall be construed to establish a period of limitation with respect to any other obligation, which Contractor has under the Contract Documents or under any separate warranty or guaranty required thereby. The establishment of a

FOR COUNCIL APPROVAL ONLY

specific warranty period relates only to the specific obligation of Contractor to correct defective Work, and it has no relationship to the time within which its obligation to comply with the Contract Documents or applicable provision of law may be sought to be enforced, nor to the time within which proceedings may be commenced to establish Contractor's liability with respect to its obligations other than specifically to correct the Work. Without limiting the foregoing, it is understood and agreed that Contractor shall remain responsible for latent defects with its work, regardless of the expiration of any warranty period set forth in the Contract Documents.

7-1.13 **WARRANTY OF TITLE.** No material, supplies, or equipment for the Work under this Contract shall be purchased subject to any chattel mortgage, security agreement, or under a conditional sale or other agreement by which an interest therein or any part thereof is retained by the seller or supplier. The Contractor warrants good title to all material, supplies, and equipment Installed or incorporated in the Work and agrees upon completion of all Work to deliver the Premises, together with all improvements and appurtenances constructed or placed thereon by it, to the City free from any claim, liens, security interest, or charges, and further agrees that neither the Contractor nor any person, firm, or corporation furnishing any materials or labor for any Work covered by this Contract shall have any right to a lien upon the Premises or any improvement or appurtenances thereon. Provided, that this shall not preclude the Contractor from Installing metering devices and other equipment of utility companies, the title of which is commonly retained by the utility company. In the event of the Installation of any such metering device or equipment, the Contractor shall advise the City as to the legal owner thereof. Nothing contained in this paragraph, however, shall defeat or impair the right of such persons furnishing materials or labor under any bond given by the Contractor for their protection or any rights under any law permitting such persons to look to funds due the Contractor in the hands of the City.

FOR COUNCIL APPROVAL ONLY

The provisions of this paragraph shall be inserted in all subcontracts and material Contracts, and notice of its provisions shall be given to all persons furnishing materials for the Work when no formal Contract is entered into for such materials.

[END OF GENERAL CONDITIONS]

FOR COUNCIL APPROVAL ONLY

SUPPLEMENTAL CONDITIONS

Project: Lower Bank Park Project

FOR COUNCIL APPROVAL ONLY

Scope of Supplemental Conditions

1. The Work shall be performed in accordance with the General Conditions and Department Standards, except as the General Conditions may be modified by the following additional City Standards, incorporated herein by this reference, if so indicated.

	COMMUNITY DESIGN GUIDELINES 311 Vernon Street, Roseville, CA 95678
X	SPECIFICATIONS FOR COMMERCIAL CONSTRUCTION (ELECTRIC) 2090 Hilltop Circle, Roseville, CA 95747
X	PARKS CONSTRUCTION STANDARDS 316 Vernon Street, Suite 400, Roseville, CA 95678
X	DESIGN AND CONSTRUCTION STANDARDS 311 Vernon Street, Roseville, CA 95678
	OTHER

Above documents are available at: www.roseville.ca.us.

2. Numbering in these Supplemental Conditions conforms to that in the General Conditions. The existence of a section in these Supplemental Conditions means that the corresponding section in the General Conditions is modified in some respect. Unless otherwise specified, the modified General Condition is deleted entirely and the provisions of these Supplemental Conditions are substituted.

FOR COUNCIL APPROVAL ONLY

SECTION 1. DEFINITIONS AND TERMS

1-1.24 **DEPARTMENT.** Section 1-1.24 of the General Conditions is amended to include the following:

The Department for Contract Administration is the Parks, Recreation & Libraries Department of the City of Roseville.

FOR COUNCIL APPROVAL ONLY

SECTION 2. CONTROL AND SCOPE OF THE WORK

2-1.08 **SUBMITTALS.** Section 2-1.08 of the General Conditions is amended to include the following:

The time allowed for review of each submittal is 10 Days after receipt of the submittal by the Director.

FOR COUNCIL APPROVAL ONLY

SECTION 3. CHANGES IN THE WORK

There are no amendments to the General Conditions.

FOR COUNCIL APPROVAL ONLY

SECTION 4. CONTROL OF MATERIALS

There are no amendments to the General Conditions.

FOR COUNCIL APPROVAL ONLY

SECTION 5. LEGAL RELATIONS AND RESPONSIBILITY

5-1.14 **AIR POLLUTION CONTROL AND ASBESTOS.** Section 5-1.14 of the General Conditions is amended to include the following:

To the best of the City's knowledge, asbestos __is NOT__ present in the vicinity of the Project. Additional information shall be made available to Contractor upon request.

FOR COUNCIL APPROVAL ONLY

SECTION 6. PROSECUTION AND PROGRESS

6-1.04 **PROGRESS SCHEDULE.** Section 6-1.04F of the General Conditions is amended to include the following:

Progress schedules showing project completion dates more than 0 Days earlier than specified in Section 6-1.07 shall be rejected.

6-1.07 **TIME OF COMPLETION.** Section 6-1.07 of the General Conditions is amended to include the following:

The Contractor shall begin Work within 10 business days after receiving a Notice to Proceed and shall diligently prosecute the Work to completion. The Work shall be completed within 100 business days of the Notice to Proceed.

If landscaping plants require an establishment period, that period will be 90 calendar days. Start of the establishment should be as outlined in the Specifications.

6-1.08 **LIQUIDATED DAMAGES.** Section 6-1.08 of the General Conditions is amended to include the following:

The amount of Liquidated Damages is the sum of $ 1,000 per Day.

FOR COUNCIL APPROVAL ONLY

SECTION 7: ACCEPTANCE AND PAYMENT

There are no amendments to the General Conditions.

[END OF SUPPLEMENTAL CONDITIONS]

FOR COUNCIL APPROVAL ONLY

SPECIFICATIONS

Project: JM-51 Park Project

FOR COUNCIL APPROVAL ONLY

SPEC

FOR COUNCIL APPROVAL ONLY

TABLE OF CONTENTS

TABLE OF CONTENTS
SECTION 00 31 46 PERMITS
SECTION 01 10 00 SUMMARY OF WORK
SECTION 01 57 23 STORM WATER POLLUTION CONTROL
SECTION 03 30 00 SITE CONCRETE
SECTION 12 93 00 SITE FURNISHINGS
SECTION 26 00 00 SITE ELECTRICAL
SECTION 31 10 00 CLEARING AND GRUBBING
SECTION 31 20 00 EARTHWORK
SECTION 32 12 16 ASPHALT CONCRETE PAVING
SECTION 32 84 00 IRRIGATION SYSTEM
SECTION 32 90 00 PLANTING
SECTION 33 00 00 UTILITIES

APPENDICES

A: Soils Fertility Report # pages

FOR COUNCIL APPROVAL ONLY

FOR COUNCIL APPROVAL ONLY

SECTION 00 31 46
PERMITS

PART 1 - GENERAL

1.01 General Requirements

A. The requirements set forth in the General Conditions shall be in addition to the standards provided herein.

B. The requirements set forth in the Supplemental Conditions shall be in addition to the standards provided herein.

C. The intent of this Section is to furnish bidders with the known list of required permits for the Work under the Contract Documents. Bidders should note the list is not necessarily complete and additional requirements may exist or arise.

1.02 Permits

A. The Contractor shall obtain copies of the following permits from the Project Manager. Copies of these shall be obtained prior to start of work and shall be kept on the jobsite.

1. State Water Resources Control Board General Permit for Discharges of Storm Water Associated with Construction Activity.
2. City of Roseville Department of Development Services, Improvement Plan Permit for all Work related to this project.
3. City of Roseville Department of Development Services, Building Permit for all structural items associated with this project, including, but not limited to, lighting, backstops, restrooms, shade structures, drinking fountain (plumbing code), and miscellaneous electrical.

B. Contractor shall comply with the conditions of these permits, and will be solely responsible for all costs associated with meeting permit conditions unless specifically specified otherwise in these Contract Documents.

PART 2 - PRODUCTS

Intentionally left blank.

PART 3 - EXECUTION

Intentionally left blank.

FOR COUNCIL APPROVAL ONLY

END OF SECTION

FOR COUNCIL APPROVAL ONLY

SECTION 01 10 00
SUMMARY OF WORK

PART 1 - GENERAL

1.01 General

A. The requirements set forth in the General Conditions shall be in addition to the standards provided herein.

B. The requirements set forth in the Special Conditions shall be in addition to the standards provided herein.

1.02 Project Description

A. Project Name and address:

7060 Lakehaven Drive, Roseville, CA 95747

B. Project description/scope of work:

C. The scope of work for the base bid includes, but is not limited to, grading and utilities, a playground, shaded picnic area, walking paths, turf area, planting and irrigation. Additive alternates include a half-court basketball court, additional turf and irrigation, sod in lieu of seeded turf, and additional concrete pathways. The Contractor, prior to submission of his bid, shall visit the site and become familiar with the physical site conditions, the plans and specifications. All existing site conditions, apparent in a detailed, on-site inspection, shall be a part of the project. Submission of a bid shall represent the Contractor's acknowledgment of the existing site conditions and its effect on the implementation of the contract documents.

FOR COUNCIL APPROVAL ONLY

1.03 Engineering

A. Field Engineering, as a part of this contract, shall include:

1. Layout of the work and establishment of lines and grades.
2. Said work to be performed by a California Registered Civil Engineer or a California licensed Land Surveyor.
3. When discrepancies between the drawings and actual site conditions are discovered, notify the Inspector for instruction on how to proceed.
4. All work shall:
   a) Establish indicated layout in relation to the property survey and existing reference points.
   b) Establish and preserve permanent reference points during the course of construction.
   c) Set locations and elevations of all site elements as required for proper completion of the work.

1.04 Permits, Fees and Notices

A. The Contractor and/or his assigned Subcontractors shall obtain any and all required permits (beyond those provided by the City's Project Manager) from all governing authorities, including other City Departments, prior to start of construction.

1.05 Construction Plans

A. Any discrepancies or omissions found in the Contract Documents shall be reported to the City's project manager immediately. The City's project manager will clarify discrepancies or omissions, in writing, within a reasonable time.

B. In resolving inconsistencies among two or more sections of the Contract Documents, precedence shall be given in the following order:

1. Notice to Contractors
2. Special Provisions
3. City of Roseville Parks Construction Standards
4. City of Roseville Design and Construction Standards
5. Drawings

Addenda shall take precedence over all sections referenced therein. Figure dimensions on Drawings shall take precedence over scale dimensions. Detailed Drawings shall take precedence over general Drawings.

1.06 Definitions

A. The term "accepted" where used within, shall mean accepted in writing by the City of Roseville's Project Manager.

B. The term "Inspector", where noted, shall mean the project representative, appointed by the City of Roseville, who will oversee the project on a day-to-day basis.

C. The term "Project Manager", where noted, shall mean the project representative appointed by the Parks Department.

D. The term "Consultant", where noted, shall mean the prime Consultant listed on the cover sheet of these Specifications.

E. The term "accepted equal", where used herein, shall mean the equal in the opinion of the Project Manager, in consultation with the Consultant, when necessary, and as accepted in writing by the Project Manager.

F. The term "Project Owner", where used herein, shall mean the landowner or developer.

G. The term "provide", where used herein, shall mean furnish and install complete.

H. The term "as selected", where used herein, shall mean as selected by the Consultant and as accepted by the Project Manager.

FOR COUNCIL APPROVAL ONLY

I. The term “substantially complete”, where used herein, shall mean the state of which the project can be used in the manner of which it is intended with the exception of minor items as determined by the Project Manager.
J. See Section 1 of the General Conditions for additional definitions and terms.

1.07 Standards

A. Numerous standards are referenced in these contract documents. The referenced standards shall be the current edition as of the date of these contract documents. Also, see Section 4 - 1.02 of the General Conditions.
B. The codes adopted by the City, County, State and federal agencies shall govern minimum requirements for this project. Where codes conflict with these Specifications, the more stringent shall apply, and such conflicts shall be brought to the attention of the Project Manager. Caltrans Standards shall be applied where specifically referenced. In the absence of specific reference requirements in the contract documents, the applicable codes shall govern.
C. In addition to the standards noted in individual sections of these Specifications, standards of the following organizations shall be noted by initials only.
   1. ANSI: American National Standards Institute.
   2. ASTM: American Society for Testing and Materials.

1.08 Submittals

A. All submittals shall be submitted at one time within ten (10) working days from issuance of Notice to Proceed. The review time for submittals shall be as noted in Section 2 - 1.04 of the Special Conditions. Items returned for re- submittal shall be returned to the City within two weeks
B. The Contractor shall include a cover sheet indicating the following (A sample is provided in Section 5: Forms):
   1. Drawing sheet or specification section reference (by section, paragraph and sub-paragraph numbers);
   2. Item description;
   3. Indication whether this item is “as specified” or “proposed substitution” and
   4. A space for itemized response summary, e.g. “reviewed” or “resubmit”.
C. Contractor shall provide submittals electronically in PDF file format and physical product samples as required in specifications. It shall be the Contractor’s responsibility to ensure the summary sheet is included in the submittal package. Incomplete submittal packages (i.e., the lack of a summary sheet or lack an appropriate product sample) will not be reviewed.
D. Proposed substitution requests must include a comparison between the originally specified item and the proposed substitute. The burden of proof of compliance for proposed substitutions with project requirements rests with the Contractor. Coordination of the installation of accepted substitutions, including

FOR COUNCIL APPROVAL ONLY

incidental changes/modifications to accommodate proposed products shall be at no additional cost to the Owner.

E. Where required in specified Section of these Specifications, submittals shall include proof of order of site furnishings, play equipment or other materials within two weeks (ten working days) of receipt of the returned, approved submittal. Submittals of orders shall be made at one time. Exceptions will be considered, with justification.

1.09 Tests

A. In addition to Section 4 - 1.03 of the General Conditions, testing and inspections may be performed by a private testing laboratory. The testing laboratory, provided by the City, shall be under the direction of a California registered civil engineer. All work shall conform to requirements set forth by ASTM B329, and shall be acceptable to the City.

B. Copies of the laboratory reports/results of each test or inspection shall be provided to the Project Manager, Inspector and Contractor.

1.10 Temporary Facilities

A. Sanitary provisions shall be the responsibility of the Contractor. Existing restroom facilities shall be not utilized by the Contractor, his Sub-contractors, or employees thereof, unless specifically accepted by the Project Manager. Provide chemical toilets or water closets and urinals connected to the sewer in a location accepted by the Project Manager.

B. Barricades shall be the responsibility of the Contractor and shall be erected as necessary to protect the property, the construction and the public from hazards due to construction.

C. Signs, other than those identified in these Specifications, shall be prohibited. Notices, required by law, shall be posted and maintained.

1.11 Utilities

A. All utility fees, including, but not limited to, connection fees, installation fees, meters, monthly service fees and cost of utilities used during the course of construction and establishment are considered a direct cost and are the responsibility of the Contractor until project acceptance by City Council.

1.12 Dust/Noise Control Requirements

A. Dust and other air pollution nuisances on or adjacent to the site shall be abated, per Section 2 - 1.15 of the General Conditions. Dirt shall not be allowed to accumulate on streets or sidewalks nor be washed into sewer.

B. Noise from construction operations shall be kept to a minimum. Allowable hours of operations shall be from 7 a.m. to 7 p.m. Monday through Friday. Work on

FOR COUNCIL APPROVAL ONLY

weekends and holidays must be approved by the project manager. Work on weekends and holidays shall not begin before 8 a.m. and must be completed by 8 p.m.

1.13 Tree Replacement Schedule

A. Trees damaged or removed without prior approval shall be replaced at an inch per inch basis on-site, except otherwise accepted. New stock shall follow the table provided:

Plant Size	Inch Value
3 Five Gallon Stock	One Inch
1 Fifteen Gallon Stock	One Inch
1 24” Box Stock	Two Inches
1 36” Box Stock	Three Inches

1.14 Inspection of Construction

A. In addition to the routine inspections performed by the Parks Inspector, portions of work may be inspected by the other city departments. Notify the Parks Inspector and Project Manager a minimum of 48 hours prior to date of inspection.

B. The Parks Inspector shall be the main line of communication between the site superintendent, the project manager and other City department inspectors. Changes in scope of work or standards shall be approved by the project manager.

C. Refer to the parks inspection record. This shall be issued at the Pre-Construction meeting and shall be utilized by the Contractor throughout the course of construction. A completed “hard card” shall be submitted to the Project Manager along with required turn in items (See 1.19 this Section) upon final acceptance of the project. The Notice of Completion shall not be filed until all record documents have been received and accepted.

1.15 Adverse Impacts to Site Conditions Due to Construction

A. Impacts that affect the site conditions to the detriment of the park or streetscape impacts that affect the site conditions to the detriment of the park or streetscape construction or long term viability of the site shall be mitigated by the contractor prior to acceptance of the project. Such impacts shall include, but are not limited to:

1. Soil compaction in non-structural areas;
2. Diesel or gas fuel leaks/spillage;
3. Buried concrete or other construction debris;
4. Hazardous material contamination;
5. Lime treatment in planting areas;
6. and more.

FOR COUNCIL APPROVAL ONLY

1.16 Pre-final (Punch List) Review

A. Notify, in writing, to the Parks Construction Inspector, that the work is substantially complete. Substantially complete is defined as “the state of work where it may be used in a suitable and intended manner with exception of minor corrections”. Partial acceptances will not be granted. Items to be reviewed as a part of substantial completion include:
   1. All construction items
   2. Installation of all site furnishings, including lights and signs
   3. All planting, including mulch installation and weed control of planted areas.
      a) For sodded turf, upon sod installation
      b) For seeded turf, upon second mowing as described in Section 329000, Part 3.11.

   4. The irrigation system is fully functioning as designed and as confirmed by the landscape irrigation audit.

B. Within five workings days of receipt of notification, the Parks Construction Inspector will confirm substantial completion. The Parks Construction Inspector will schedule the punch list walk (pre-final review) within five working days after the project has been determined as substantially complete. A formal punch list will be developed at the punch list walk. The Parks Construction Inspector will provide a copy of the formal punch list to the Contractor within five working days of punch list walk. Performance of the punch list walk does not automatically trigger the start of establishment.
   1. If at any point during this review it becomes apparent the Contractor has not properly prepared for the site review, the inspection shall immediately be terminated and re-scheduled at such a time as the site has been readied for a review. Any costs for the re-scheduling of the review shall be the responsibility of the Contractor. Lack of site preparation could delay start of the establishment period.

C. Concurrent to the pre-final review, the City will make a formal request for all required turn-in items to be submitted to the City. All turn-in items shall be submitted in their entirety to the City’s Park Construction Inspector. Partial turn-in packages will be rejected.

D. Once all turn-in items have been confirmed to be complete and accurate, the establishment period may be considered to begin. The City shall have sole discretion in determining the appropriateness of the commencement of the establishment period and shall notify the developer/contractor in writing of the start and end dates. Portions of the project will not be accepted for establishment prior to the substantial completion of the entire project.

FOR COUNCIL APPROVAL ONLY

1.17 Establishment Period

A. The duration of the establishment period shall be:
   1. For seeded turf in parks: Ninety (90) calendar days, minimum, and until the Notice of Completion (NOC) for City-built parks has been approved by the City Council, or the deed transferring property ownership, has been recorded at the County for Developer-built parks.
   2. For sodded turf in parks: Forty-five (45) calendar days commencing between March 1st and October 31st and sixty (60) calendar days commencing between November 1st and February 28th, and until the Notice of Completion (NOC) for City-built parks has been approved by the City Council, or the deed transferring property ownership, has been recorded at the County for Developer-built parks.
   3. For streetscapes: Thirty (30) calendar days, minimum, and until final acceptance of all related street improvements subject to approval of a Notice of Completion by the City Council. The inclusion of large box trees (36" box and greater) may require an extended establishment period of ninety (90) calendar days, as noted on plans.

B. Active maintenance is required throughout the entire establishment period. Active maintenance is defined as:
   1. All areas within the project site shall be protected against damage including vandalism, erosion, trespass, rodents and other acts. Immediately repair all damaged areas.
   2. All walkways and paved areas shall be kept clean and all debris within planting and turf areas shall be immediately removed.
   3. Automatic irrigation controller shall be fully utilized and irrigation system monitored and adjusted as described in Section 32 84 00 4.03.
   4. All plant and turf maintenance as described in Section 32 90 00 3.11

C. Prior to the start of the final thirty (30) days of establishment:
   1. All punch list items shall be completed.
   2. All certifications and testing shall be completed.
   3. All plantings and turf shall be thriving and in a healthy condition.
   4. The lack of active maintenance prior to the final thirty (30) days may constitute a delay in the start of the final thirty (30) days of the establishment period.

1.18 Final Review

A. One (1) week prior to the end of the establishment period, a final on-site review shall be conducted to review project readiness for final turn-over. All punch list items must be satisfactorily addressed prior to the final review.

FOR COUNCIL APPROVAL ONLY

B. The project shall be prepared and cleaned per Section 2 - 1.12 of the General Conditions; the turf shall be mowed; and the irrigation heads shall be adjusted appropriately one day prior to the scheduled final review.
C. Acceptance of the project shall be considered “field accepted” and a recommendation will be forwarded to the City Council for “final acceptance” per Section 7 - 1.01 of the General Conditions.
D. An unaccepted project shall extend the establishment period until such time as the unaccepted portions of the project have been reviewed and field accepted by the Inspector and Project Manager.
E. Turn over for City maintenance shall occur only after:
    1. The specified duration of the establishment period has been successfully completed.
    2. If required, the deed transferring property ownership, has been recorded at the County.
    3. A Notice of Completion (NOC) for city-built parks and for streetscapes has been approved by the City Council.
F. Contractor shall provide a written guarantee covering all improvements associated with this project. See 1.19 – Warranties and Guarantees.

1.19 Record Documents

A. Record documents or as-built plans shall be maintained on-site and updated routinely as specified in Section 2 - 1.13 of the General Conditions. Record documents shall include **all items under the contracted scope of work**.
B. Record documents shall be submitted:
    1. two sets 11 x 17 laminated reductions of the irrigation plan illustrating with colors the individual controller stations; and
    2. Electronically submit PDF scanned images (in color) of the verified/initialed as-built drawings.
    3. For City of Roseville CIP projects, SWPPP binder.

1.20 Warranties and Guarantees

A. Warranties are required under various Sections of these Specifications. Prior to final acceptance, the Contractor shall combine all warranties into a single electronically submitted PDF, . All warranties shall be clearly labeled and the number of years highlighted. Also, see Sections 7 - 1.10 and 7 - 1.11 of the General Conditions.
    1. Warranties for equipment shall be submitted in the manufacturer’s standard form and shall be countersigned by the subcontractor or supplier and the Contractor.

FOR COUNCIL APPROVAL ONLY

2. All other warranties shall be provided in the following format, written on subcontractor's or supplier's letterhead, signed by the subcontractor or supplier and countersigned by the Contractor:

WARRANTY FOR _____ YEARS

"We hereby warrant that the ***product*** which we have installed at ***project name*** has been done in accordance with the contract documents, and that the work, as installed will fulfill the warranty requirements included in the Specifications.

We agree to repair or replace any or all of our work, together with any other adjacent work which may be displaced by so doing, that may prove to be defective in its workmanship or material within the warranty period stated above commencing from the date of final acceptance of the above named project by the City of Roseville's City Council, without additional expense to the City, ordinary wear and tear and unusual abuse or neglect excepted.

In the event of failure to comply with the above conditions within thirty (30) days of notification by the City, we collectively or separately do hereby authorize the City to proceed with the repairs or replacement of such defects at our expense. Payment of said costs and charges will be forwarded to the City upon demand.

Signed: _____ _____
Subcontractor or Supplier Date

Countersigned:_____ _____
Contractor Date

B. Guarantees shall be a minimum of one (1) year for all plant material, including trees and shrubs. The guarantee shall state that plant materials (trees & shrubs) to be free of all defects or disease and all plants are in a healthy and thriving condition at the completion of the contract. Deciduous plant material shall be warranted beyond the time of contract completion until such time as growth becomes evident.

PART 2 - PRODUCTS

Intentionally left blank.

FOR COUNCIL APPROVAL ONLY

PART 3 - EXECUTION

Intentionally left blank.

END OF SECTION

FOR COUNCIL APPROVAL ONLY

SECTION 01 57 23
STORM WATER POLLUTION CONTROL

PART 1 - GENERAL

1.01 General

A. The requirements set forth in the General Conditions shall be in addition to the standards provided herein.
B. The requirements set forth in the Special Conditions shall be in addition to the standards provided herein.

1.02 References

A. State Water Resources Control Board Order No. WQ 2022-0057 DWQ National Pollutant Discharge Elimination System General Permit No. CAS0000002, for Storm Water Discharges Associated with Construction and Land Disturbance Activities.
B. CASQA California Stormwater BMP Handbook – Construction, October 2024.

1.03 Definitions

A. NOI: Notice of Intent
B. NOT: Notice of Termination
C. QSP: Qualified SWPPP Practitioner
D. QSD: Qualified SWPPP Developer
E. SWPPP: Storm Water Pollution Prevention Plan
F. SWRCB: State Water Resources Control Board
G. NPDES: National Pollutant Discharge Elimination System
H. WDID: Waste Discharger Identification number
I. BMP: Best Management Practices

FOR COUNCIL APPROVAL ONLY

PART 2 - PRODUCTS

Intentionally left blank.

PART 3 - EXECUTION

3.01 SWPPP

A. Comply with State Water Resources Control Board Order No. WQ 2022-0057-DWQ National Pollutant Discharge Elimination System General Permit No. CAS000002, for Storm Water Discharges Associated with Construction and Land Disturbance Activities.

B. A SWPPP has been developed for this project. The SWPPP is a dynamic document and will change as conditions (weather or construction phases) warrant.
C. Implementation of the SWPPP is the responsibility of the Contractor and a part of this project. Costs associated with implementation and maintenance of the BMPs per the SWPPP shall be included in the lump sum base bid.
D. Major changes to the SWPPP shall be reviewed by the City's QSD prior to implementation. Cost associated with the major changes will be paid for using the unit cost listed in the Additions or Deletions Sheet of the Proposal
E. The City's QSD/QSP will perform weekly inspections of the jobsite. Implementation of and minor changes to the SWPPP as directed by the City's QSP shall be incidental to the Work. Contractor shall start all inspection corrective actions within 72 hours of observation, and complete as soon as possible.
F. All BMPs installed will be inspected by the City's QSD/QSP for compliance with the SWPPP and BMP Fact Sheets. BMPs that are not in compliance shall be brought into compliance by the Contractor at no cost to the City.
G. An electronic copy of the SWPPP will be provided to the contractor. The contractor shall keep a binder on-site for inspection reports, and will make the inspection binder available upon request.
H. The SWPPP shall be readily available throughout the course of construction and until the NOT has been accepted by SWRCB. The SWPPP shall be made available upon request by a representative of the Regional Water Quality Control Board, State Water Resources Control Board, United States Environmental Protection Agency, or City' storm water staff.
I. At the end of the establishment period, the Contractor shall submit copies of all inspection reports and sampling and analysis results to the City's Project Manager.

FOR COUNCIL APPROVAL ONLY

3.02 Schedule

A. Contractor shall develop a Water Pollution Control Schedule that describes the timing of grading or other work activities that could affect water pollution. The schedule shall be updated by the Contractor to reflect changes in the Contractor's operations that would affect the necessary implementation of water pollution control practices. The typical sequence of work shall be adjusted by the Contractor based on weather conditions and forecasted rain events. The schedule is considered an appropriate and applicable BMP.

3.03 Penalties and fines

A. Contractor is responsible for all penalties and fines assessed to or levied on the project related to the implementation of the SWPPP.

B. In an effort to maintain compliance with the General Permit, the Contractor may be asked to make changes to the BMPs. If the Contractor is unable to perform these services in a timely manner the City reserves the right to address any areas of concern and deduct the cost from the contract.

3.04 BMP's

A. Construction BMP's shall be installed per the Erosion / Sediment Control Plan and project SWPPP, and in accordance with the CASQA California Stormwater BMP Handbook. Use of alternative BMP's will be reviewed and accepted at the discretion of the City's QSD.

3.05 Cleaning

A. Thoroughly clean all areas where work has occurred. Remove from the site excess material, debris and rubbish.

B. Take all precautions to protect completed work. Immediately repair or replace all damaged areas due to tire ruts, erosion, compaction failure, etc. Keep all erosion control measures intact.

END OF SECTION

FOR COUNCIL APPROVAL ONLY

FOR COUNCIL APPROVAL ONLY

SECTION 03 30 00
SITE CONCRETE

PART 1 - GENERAL

1.01 General Requirements

A. The requirements set forth in the General Conditions shall be in addition to the standards provided herein.

B. The requirements set forth in the Supplemental Conditions shall be in addition to the standards provided herein.

C. The standards set forth in the City of Roseville Design and Construction Standards and the City of Roseville Parks Construction Standards, latest editions, shall be in addition to the standards provided herein.

1.02 Description

A. Furnish all labor, materials and equipment for the complete installation of all concrete work, flatwork and poured-in-place as shown in the Plans and as specified herein.

1.03 References

A. Caltrans Standard Specifications, latest edition.

B. California Building Code (CBC) and California Administrative Code (Title 24), latest editions.

1.04 Quality Assurance

A. For all flatwork, the Contractor shall pour a six-foot by six-foot (6’ x 6’) sample of each type of finish specified for review and acceptance by the Project Manager prior to pouring any concrete. The accepted samples shall remain on-site and intact until all concrete work has been completed. The quality of the concrete work shall be measured by the accepted samples.

B. During the course of construction, a qualified testing laboratory shall obtain samples as determined by the Inspector and conforming to federal and state codes and standards. Such costs shall be paid for by the City. Re-tests and removal of below acceptable strength concrete shall be borne by the Contractor. The Contractor shall cooperate with the testing during the course of obtaining such samples.

C. Variances in surface grades of more than 1/8”, as measured by a straight edge ten feet (10‟) long, shall be corrected to the satisfaction of the Inspector. Remove all areas where standing water occurs, including any surface irregularities.

FOR COUNCIL APPROVAL ONLY

1.05 Handling and Storage

A. Comply with ASTM C-94, “Specifications for Ready Mix Concrete” for the batch, mix and transport of concrete.
B. Mix and deliver only the amount that will be poured immediately.

1.06 Record Drawings

A. The Contractor shall keep an accurate record of the as-built conditions of the site concrete. These records shall be updated daily and kept at the construction site. At any time, the Inspector may examine the conditions of the “as-builts” to ensure compliance of the above.

PART 2 - PRODUCTS

2.01 Concrete

A. Concrete for play area curbs, sidewalks, and accessible ramps shall conform to the provisions of Section 90-2 “Minor Concrete” of the Caltrans Standard Specifications. Cementitious material shall be „Type II Modified” and shall contain no less than 505 pounds of cementitious material per cubic yard. Aggregate shall be not greater than one-inch or smaller than 3/8-inch. Submit concrete analysis for review and acceptance prior to placement of concrete.

2.02 Fiber Reinforcement

A. Fibers for concrete shall conform to ASTM C1116 Type III and manufactured specifically for the secondary reinforcement of concrete. Fiber length to be 0.50” or 0.75”. Acceptable products include Fibermesh 150, as manufactured by Sika USA, or accepted equal.

2.03 Expansion Joint Material

A. Fiber expansion joint shall conform to ASTM-1751 and shall be a non-extruding resilient filler. Filler shall have preserve attributes and high quality bituminous materials.
B. Apply Sikaflex elastomeric sealant, or accepted equal, over all expansion joints.

2.04 Concrete Forms

A. All forms shall be new at the start of the project.. Minimum size lumber shall be 2 x 6.
B. Radius bends shall be formed by spring steel forms or laminated boards, as required.
C. Plywood shall be 5/8”, Class I, exterior grade as outlined in APA “Guide to Plywood Grades”. Omit mill oiling treatment.

FOR COUNCIL APPROVAL ONLY

PART 3 - EXECUTION

3.01 Poured-In-Place Concrete

A. Concrete for hardscape or flatwork shall be placed on subgrade compacted per geotechnical engineer recommendations.. Prior to placement of concrete, a soils compaction test must be performed by an accepted soils testing professional on a representative number of locations along the flatwork area. The City or project owner shall provide the initial test. The results of these tests must be available and meet acceptable levels prior to pouring. Re-tests and re-work of any area, as directed by the soils professional, shall be the responsibility of the Contractor.

B. Construct forms to conform to the shapes, dimensions and details shown on the Plans. All forms shall be true to lines, plumb, level and square.

C. Forms shall not leak, spread, shift or settle when concrete is placed.

D. All forms shall carry dead and live loads and shall not deflect more than 1/8" between supports after placement of concrete.

E. All forms shall be thoroughly soaked a minimum of twelve (12) hours prior to pouring of concrete. Forms shall be treated per manufacturer's recommendations.

F. Reuse of forms may be allowed at the discretion of the Inspector. Reused forms shall be cleaned and free of defects that would affect the final concrete finish.

G. Concrete footings shall be formed only when excavations slump or cave in. Over-excavate the trench or footing diameter to accommodate the forms' installation and removal. Apply water to moisten soil. Do not allow water to create mud or ponding.

3.02 Fiber Reinforcement

A. Install per manufacturer's instructions. Apply at the batch plant prior to delivery. Thoroughly mix fiber material to avoid "clumping".

3.03 Expansion Joints

A. Expansion joints shall be placed where vertical elements meet horizontal paving unless otherwise noted on the Plans. This shall include vertical expansion joints on play area curb walls, buildings, shade structures, walls and/or planters. The corners of the paving shall be tooled at the expansion joints. Trim exposed fibers which protrude above or beyond the finish surface of paving or the finish surface of the wall.

3.04 Control Joints for Concrete Sidewalks

A. Control joints shall be per Parks Standard Details with deep, straight and finished with rounded edges. Control joints shall be placed (on-center) a

FOR COUNCIL APPROVAL ONLY

distance equal to the width of the concrete walkway, unless otherwise shown on the Plans. For example a ten-foot wide walkway shall have control joints placed ten feet on center. Control joints shall not dead-end into an adjacent panel, and shall not create acute angles that are prone to break off.

3.05 Sawcutting of control joints shall begin as soon as the concrete surface has hardened sufficiently to resist raveling.

3.06 Placement of Concrete

A. Do not pour concrete in weather below 40 degrees F. or when temperatures are predicted to fall below freezing within 24 hours, except with prior authorization.

B. Concrete shall be transit mixed according to ASTM C-94. Discharge ready-mixed concrete from transport vehicle while the concrete is still plastic and before stiffening occurs.

.

C. Concrete shall be deposited up to the finished height of the forms and up to the adjacent joint. No partial pours will be allowed. Excess material shall be dumped on-site and later removed by the Contractor.

D. Thoroughly consolidate the concrete by manually spading and tamping concrete into all corners of the forms and by utilizing a high-speed mechanical vibrator. Retain a standby vibrator on-site during the course of concrete work. When utilizing the vibrator, take precautions to avoid impact on the forms.

E. After obtaining uniform consolidation, screen tamper all flatwork surfaces, screed and bull float to ensure that large aggregates are pushed below the surface. When it is practical to work on the surface, wood float, steel trowel paving to a uniform surface.

F. Concrete elements shall not exceed the following tolerances:
   1. Linear: 1/8”
   2. Slab deviation: 1/8” in 10’

3.07 Finishes

A. Finishes shall be as shown on the Plans and shall be consistent in quality throughout the project. No visible cracks or discoloration will be accepted. Finishes on vertical surfaces shall be consistent throughout. Vertical expansion joints are spaced as identified on the plans and are smooth with the finish surfaces. All edges for flatwork and vertical surfaces shall be eased at a consistent radius.

B. Upon completion of float finishing, provide the final finish as follows:

FOR COUNCIL APPROVAL ONLY

1. Medium Broom Finish: shall be accomplished by pulling a stiff bristle broom across a floated surface. The direction of the broom shall be perpendicular to the path of travel, unless otherwise shown on the Plans.

3.08 Removal of Forms

A. Form removal timing to be based on the concrete set strength and environmental conditions unless specifically called out on the drawings.

B. Remove all bolts, nails, ties, wires, etc. a minimum of one inch (1”) below the surface of the concrete. Remove imprints, irregularities or other such defects and patch as directed by the Inspector.

3.09 Curing and Protection

A. Allow adequate time for the concrete to cure. Contractor to take necessary steps to minimize evaporation and maximize the process of hydration.

B. Protect all concrete from damage during the curing period. Should damage occur, Contractor shall take immediate action to repair damage or replace damaged concrete to the satisfaction of the City.

3.10 Clean-Up

A. During the course of this work, the area shall be kept clear and free of debris as realistically as possible. Upon completion of concrete work, completely remove from the site all used forms, hardware, spillage, rejected work and other materials.

B. Remove from site furnishing posts all concrete “slobber”. Re-touch posts as necessary for a clean finish.

FOR COUNCIL APPROVAL ONLY

END OF SECTION

FOR COUNCIL APPROVAL ONLY

SECTION 12 93 00
SITE FURNISHINGS

PART 1 - GENERAL

1.01 General Requirements

A. The requirements set forth in the General Conditions shall be in addition to the standards provided herein.

B. The requirements set forth in the Supplemental Conditions shall be in addition to the standards provided herein.

1.02 Description

A. Furnish all labor, materials and equipment for the complete installation of all site furniture, including play equipment and play surfacing, as shown on the Plans and as specified herein.

1.03 References

A. All play equipment shall meet or exceed the standards set forth by the Consumer Product Safety Commission (CPSC), comply with the Americans with Disabilities Act (ADA), meet all current ASTM standards and be consistent with State and local codes.

B. The play area surfacing shall meet or exceed the fall absorption/impact rates set forth by the CPSC guidelines and ASTM standards. The surfacing shall be an accessible surface and manufactured specifically for play areas.

C. Nothing in the Plans or Specifications is to be construed to permit work not conforming to regulating codes and standards. The Contractor shall furnish without extra charge any material and labor, when required, by the compliance with these rules and regulations, even though the work was not mentioned in these particular Specifications or shown on the Plans.

D. The product manufacturer shall supply complete Specifications for the installation of all site furnishings, including play equipment and play surfacing.

1.04 Submittals

A. Submittals for specified items are required. The Contractor shall submit a materials summary sheet indicating which items will be installed as specified and which items are proposed for substitutions. The Contractor shall submit proof of order within ten (10) working days of the Notice to Proceed, indicating all specified materials have been ordered, noting “as specified” or “substitution proposed”. For the following items, also provide:

FOR COUNCIL APPROVAL ONLY

1. Play Equipment and Swings submittals shall include color samples, manufacturer's materials and parts list, and installation instructions.
2. Shade Shelter submittal shall include color samples, manufacturer's materials and parts listed, and installation instructions.
3. All items with "color as selected by City" shall include color samples.

B. On the date of the Notice to Proceed, the Contractor shall immediately place the order to purchase all site furnishings, including the play equipment and play surfacing as specified on the Plans and as outlined herein. **Proof of all orders shall be submitted to the Project Manager within ten (10) working days of the Notice to Proceed.**

C. The Contractor shall submit a Certificate of Compliance from a third party certified playground inspector which verifies that the entire playground, including individual components, and surfacing meets or exceeds regulated requirements as described in Section 1.03 above.

1.05 Record Drawings

A. The Contractor shall keep an accurate record of the as-built conditions of the miscellaneous site amenities. These records shall be updated daily and kept at the construction site. At any time, the Inspector may examine the conditions of the "as-builts" to ensure compliance of the above.

PART 2 - PRODUCTS

2.01 Materials

A. Play Equipment shall be custom configuration as shown on the Plans and as specified herein. The equipment shall be as distributed by *All About Play, contact Glen Wurster, 916-923-2180*, and as manufactured by *Little Tikes Commercial* or accepted equal. Color as selected by the City.

B.

C. Engineered wood fiber shall be clean, engineered wood fiber, manufactured specifically for play areas.
   1. Engineered wood fiber manufacturer shall provide testing certification by an independent testing agency that the results comply with CPSC guidelines and ASTM standards.
   2. Engineered wood fiber shall meet the following requirements: ASTM F1951-99 (ADA Compliance Test) and ASTM F 1292-96 (Shock Absorbency).
   3. Manufacturer shall provide a Certificate of Insurance that shall provide coverage for products liability with the limit of liability not less than $1,000,000.

FOR COUNCIL APPROVAL ONLY

4. The manufacturer shall also provide written guarantee for three (3) years from the date of installation against decay and biochemical degradation calling for replacement of defective materials during the guarantee period.
5. Manufacturer certifies that the engineered wood fiber has been installed in not less than three (3) sites for periods of not less than three (3) years demonstrating the claims made with regard to these Specifications.

D. Picnic Tables shall be as shown on the Plans and as specified herein. The tables shall be as distributed by *All About Play, contact Glen Wurster, 916-923-2180,*, and as manufactured by *MyTCoat* or accepted equal. Tables shall be in-ground mount and made of perforated steel. Color as selected by the City.

E. Benches shall be as shown on the Plans and as specified herein. The benches shall be as distributed by *All About Play, contact Glen Wurster, 916-923-2180,*, and as manufactured by *MyTCoat* or accepted equal. Benches shall be made of perforated steel and surface-mount, unless otherwise specified on plans. . Color as selected by the City.

F. Drinking Fountain shall be MDF #10145 SM (bottle filler, dual bowl and accessible) and stainless steel surface carrier as distributed by Husbands and Associates (800) 821-9838 and as manufactured by Most Dependable Fountains or accepted equal. Color to be stainless powder coated black or as approved. Include recessed hose bib with locking cover, stainless steel control valves with O-rings, and external stainless steel surface mount carrier.

G. Park Identification Sign shall be fabricated by Quick Crete Products Corp., Norco, CA, (916) 447-8644, or by Outdoor Creations, Inc., Anderson, CA, (530) 365-6106, or accepted equal.

H. Play Area Age-Appropriate Signage shall contain the following language: "This play area has been designed for the use of children aged *5-12* years of age."

I. Park Namesake Plaque shall be a 24" by 18" digital high pressure laminate graphic panel fabricated or accepted equal. Plaque shall be mounted on a SlimLine single pedestal sign system or accepted equal. Manufacturer for the plaque and sign system (model # 2418 SL-SLP-AL) is KVO Industries (Chris Howell, (707) 573-6868). Installation location shall be verified in the field with the Project Manager.

J. Playground rules sign shall be as fabricated by Gopher Sign Company, (651) 698- 5095, or accepted equal.

K. Line Paint (for basketball courts): Hawker - Laykold; Koch Materials - Decocolor; Extol - Color; L&M - Nova acrylic; California Products Corp - Plexicolor Laykold; or accepted equal.

L. Trash Receptacle shall be as shown on the Plans and as specified herein. The trash receptacle shall be as distributed by *All About Play, contact Glen Wurster,*

FOR COUNCIL APPROVAL ONLY

916-923-2180, and as manufactured by *MyTCoat, model number RDW32-D-02-002* or accepted equal.

M. Shade Shelter shall be as shown on the Plans and as specified herein. The *Shade Shelter* shall be as distributed by Miracle Play systems LLC, contact Shana Friesen, shana@miracleplaysystems.com, and as manufactured by Poligon, or accepted equal. Color as selected by the City.

N. Basketball Standard shall be as shown on plans and as specified herein. The Basketball Standard shall be distributed by Miracle Playsystems LLC, contact Shana Friesen, shana@miracleplaysystems.com and as manufactured by Patterson Williams or accepted equal.

1. Post shall be Patterson Williams, model # 1513G, dual post, 3 ½" O.D. post, 6' offset galvanized,
2. Backboard shall be Patterson Williams, model # 26 (LA-26), 45" H x 60" W rectangle backboard, heavy duty ¼" thick steel, powder coated white, with targe and perimeter
3. Rim shall be Patterson Williams, model # 44 (LA-44), heavy duty double rim for chain net with universal mount plate.

PART 3 - Net shall be Patterson Williams, model #35, super chain netEXECUTION

3.01 Installation

A. Contractor to provide experienced workers or subcontractors to install all site furnishings, including the play equipment and play surfacing described in these Specifications. The workers or subcontractor must demonstrate that at least five (5) similar play structures and five (5) play surface applications similar to that specified for this project have been installed in the last three (3) years.

B. All site furnishing, including play equipment shall be installed per manufacturer's instructions.

C. Engineered wood fiber shall be blown in place to avoid damage to adjacent improvements unless specifically approved by City.

D. Heights of tables and benches shall be as follows, unless otherwise required by ADA; California Title 24 or other code requirements:

Description	Height Above Finish Grade
Table Surface Height	34" Maximum
Knee Space Height	27" Minimum Clear Space
Knee Space Depth	17" Minimum from edge of table to nearest obstruction under table top
Width of Knee Space	30" Minimum clear width beneath table
Bench Surface Height	16" Minimum, 18" Maximum

E. Heights for play equipment, including ramps and transfer decks shall comply with the approved recommendations by the U.S. Architectural and

FOR COUNCIL APPROVAL ONLY

Transportation Barriers Compliance Board: Play Facilities Regulatory Negotiation Committee.

F. For play equipment, locate all footings prior to installation of drain lines. Adjust drain lines to accommodate play structure footings. Provide appropriate fall zones as shown on the Plans and per applicable codes and guidelines.
G. All footings shall be Class A concrete with 3/4" maximum size aggregate, unless otherwise noted. Footings shall be in accordance with Caltrans Standard Specifications, Section 90. Install all footings below finish surface. In paved areas, install paved surface over footing for a clean finished surface as shown on the Plans.
H. Carefully install all furnishings and equipment without disturbance to adjacent finishes. Contractor shall be responsible for the damage and subsequent repairs of damaged finished product.
I. Install park namesake plaque. Installation location shall be verified in the field with the Project Manager.
J. Install age-appropriate stickers on all play structures, per manufacturer's instruction.
K. Install playground rules sign. Installation location shall be verified in the field with the Project Manager.

3.02 Cleaning

A. Thoroughly clean all areas where work has occurred. Remove from the site excess material, debris and rubbish.
B. Take all precautions to protect completed work. Immediately repair or replace all damaged areas due to tire ruts, erosion, compaction failure, etc. Keep all erosion control measures intact.

PART 4 - WARRANTY

4.01 General

A. Contractor shall warranty all site amenities included under this Section.
B. Contractor shall also provide a written warranty covering all materials, equipment and workmanship furnished by him to be free of all defects after installation is accepted, including all defective parts that may have been found.
C. Submit written warranty on company letterhead addressed to the City when providing As-built drawings.
D. Contractor shall submit to the City, upon completion of work, a Certificate of Compliance by a third party certified playground inspector for the installation of the play structure and safety surfacing. Certification shall include testing for compliance of ASTM 1292 (Impact Attenuation of Surfacing Systems under and

FOR COUNCIL APPROVAL ONLY

around Play Equipment). All tests, including re-tests, shall be the responsibility of the Contractor. Submit all test results to the City.

E. Submit maintenance manual for poured-in-place resilient surfacing.
F. Contractor shall submit to the City, upon completion of work, a Certificate of Compliance from the manufacturer of the play structure for the installation of the play structure.
G. Contractor shall submit to the City, upon completion of work, critical fall criterion used to certify all play surfacing material.
H. Attach cut sheets of installed items to the warranty.

END OF SECTION

FOR COUNCIL APPROVAL ONLY

SECTION 26 00 00
SITE ELECTRICAL

PART 1 - GENERAL

1.01 General Requirements

A. The requirements set forth in the General Conditions shall be in addition to the standards provided herein.

B. The requirements set forth in the Special Conditions shall be in addition to the standards provided herein.

C. The standards set forth in the City of Roseville Design and Construction Standards, latest edition and requirements outlined by the City of Roseville Electric Department shall be in addition to the standards provided herein.

D. The standards set forth in the latest edition of the California Electrical Code (CEC), incorporating the latest edition of the NEC with City of Roseville amendments shall be in addition to the standards provided herein.

1.02 Description

A. Furnish all labor, materials and equipment for the complete installation of site electrical as shown in the Plans and as specified herein.

B. Submittals shall be required for requested substitutions or plan deviations ONLY. The Contractor shall install all specified electrical fixtures, poles and equipment, unless otherwise accepted and determined as an equivalent.

1.03 References

A. Conform to requirements outlined in the latest editions of the California Electrical Code (CEC), California Administrative Code (Title 24), California Building Code (CBC), California Administrative Code (Title 22) and other applicable codes.

B. Conform to requirements outlined in the latest edition of the Roseville Electric Specifications for Commercial Construction.

1.04 Record Drawings

A. Record drawings are required as a part of this work. At all times, the Contractor shall maintain accurate information of the work in progress. Deviation in layout of conduit or other materials shall be recorded to the satisfaction of the Inspector. Upon completion of the project, as-builts shall be submitted to the City on reproducible plan sheets and shall depict all changes in a neat and legible manner.

FOR COUNCIL APPROVAL ONLY

PART 2 - PRODUCTS

2.01 Service Panels

A. Service panels shall meet the Roseville Electric approved sections of the EUSERC requirements. The list of acceptable panels can be found at https://the.euserc.org/s/Roseville-City-of-Acceptability-Pages.pdf

B. Service panel shall be:
   1. Built to UL508A standards
   2. Metered
   3. Single phase or three phase application
   4. Rated for 120 to 480 volts
   5. Color: Hunter Green

2.02 Electronic Astronomic Time Switch

A. Electronic Astronomic Time Switch shall be DWZ Model series, as manufactured by Tork, or accepted equal.

2.03 Conduit and Fittings

A. For primaries (12,000 volts), conform to Roseville Electric's Specifications for Commercial Construction, latest edition.

B. All other conduit and fittings shall conform to the California Electric Code, latest edition.

2.04 Wires and Cables

A. Conform to the California Electric Code, latest edition.

B. All wires shall be copper only, 90-degree-C THHN/THWN insulation.

2.05 Wire Connections and Devices

A. Conform to the California Electric Code, latest edition.

B. Splices and joints for #10 AWG or smaller wiring shall be twisted together electrically and mechanically strong and insulated with approved type insulated electrical spring connectors, Scotchlok or Ideal. Joints and connections for #8 AWG or larger shall be made with Burndy, T & B, or approved equal, solderless tool applied pressure lugs and connectors. Uninsulated lugs and wire ends shall be insulated with layers of plastic tape equal to insulation of wire and with all irregular surfaces properly padded with "Scotchfil" putty prior to application of tape. Tape shall be equal to Scotch #33, General Electric #AW-1, or approved equal. Feeder splicing is not permitted.

C. Receptacles: 15 & 20 Amp 125 Volt receptacles shall be "Specification" grade, duplex, UL Listed, rated Weatherproof where installed outdoors or in damp or wet locations. Where only one receptacle is connected to a 20 ampere circuit, a 20 ampere receptacle shall be used. Receptacles to be Hubbell 5262 series,

FOR COUNCIL APPROVAL ONLY

5362 series, or equal. Provide an equipment grounding jumper (pigtail) connecting the grounding terminal of the receptacle to the grounded box.

2.06 Outlet Boxes

A. Cast Metal boxes shall be cadmium plated, cast iron alloy by Crouse-Hinds Form 8 condulets, Appleton Form 35 Unilets or accepted equal.
B. Cast Metal Outlet boxes shall be four inch (4") round, galvanized cast iron alloy with threaded hubs and mounting lugs as required. Boxes shall be furnished with cast cover plates of the same material as the box and neoprene gaskets by Crouse-Hinds VXF series, Appleton JBX series or accepted equal.

2.07 Pull and Junction Boxes

A. Per City of Roseville Electric Department's Specifications for Commercial Construction, latest edition.

2.08 Parts Identification

A. Consistent with the City of Roseville Electric Department's Specifications for Commercial Construction, latest edition.

2.09 Electrical Support Equipment

A. Concrete Fasteners shall be Philips "Red-Head" or accepted equal. Powder driven concrete pin fasteners, low velocity type shall be Remington, Ramset or accepted equal.
B. Conduit Straps shall be hot dipped galvanized, cast malleable iron, one hole type strap with cast clamp-backs and spacers (as required) by O-Z/Gedney No. 15-50G strap and #14G spacer, Efcor No. 231 strap and No.131 spacer or accepted equal.
C. Concrete Inserts shall be pressed galvanized steel, spot insert with oval slot capable of accepting support nuts of ¼ inch to ½ inch diameter thread by Unistrut No. M2506 series, Globestrut CSI series or accepted equal.
D. Construction Channel shall be 1-1/2 inch by 1-1/2 inch 12 gauge galvanized steel channel with 17/32 inch diameter bolt holes, 1-1/2 inch on center, in the base of the channel by Kindorf 905 series, Unistrut P-1000-HS or accepted equal.
E. Cable Ties and Clamps shall be one piece, nylon, reusable type lashing tiesby Thomas and Betts Co "Ty-Raps", Panduit "Pan-Ty" or accepted equal.
F. General Fasteners shall be wood screws for fastening to work; machine screws for fastening to steel; toggle bolts for fastening to gypsum board or plaster walls; expansion anchors for attachments to pre-poured concrete.
G. GFI Outlet Cover shall be metal, lockable, and flush with the surface it is installed in. Cover must conform to the California Electric Code, latest edition.

FOR COUNCIL APPROVAL ONLY

2.10 Fixtures and Poles

A. Pathway/Security lights shall be:
   1. LED: Hadco: RL54 B B N N 1 A W N N N A 2 N N N N SP1
   2. Pod: die-cast aluminum housing with tool-less access
   3. Globe: clear prismatic injection molded U.V. stabilized acrylic
   4. Symmetric photometric distribution
   5. Rated 120 volts
B. Poles shall be:
   1. Whatley: TR34 16 DE BLK TXT 30-30 or accepted equal
   2. Fiberglass, direct burial
   3. Textured round, tapered
   4. 16’ mounting height
   5. Include –RC receptacle on select poles only, as shown on plans

2.11 Tracer Wire

A. Insulated solid copper wire, minimum #12 gauge.

PART 3 - EXECUTION

3.01 Installation

A. Install (luminaire and poles) in accordance to manufacturer’s instructions.
B. Ensure proper handling and installation of fixtures including hardware necessary for a complete installation. Fixtures (luminaire and poles) shall be clean, plumb and level.
C. All lamps shall be new and in operating condition. New lamps shall have less than 100 hours of operation on-site.
D. All splices in exterior fixtures or fixture outlet boxes shall be made watertight, using specified epoxy resin splicing kits.
E. Operate the entire system, once complete, in the presence of the Inspector. Immediately correct any improper connections or other items.
F. Install concrete collars around light poles. Concrete collars shall be per the Parks Construction Standards, latest edition.
G. Install tracer wire on top of conduit for all up-lighting and sports field lighting.

3.02 Clean Up

A. At all times, maintain a safe and clean work site, free of debris and rubbish.
B. All electrical parts shall be clean of conductive and deleterious materials.
C. All enclosures shall be free of dirt and debris.
D. Clean all finishes and touch up damaged areas prior to pre-final inspection.

FOR COUNCIL APPROVAL ONLY

3.03 Excavation & Backfill

A. Refer to Section 33 00 00 Utilities.

3.04 Equipment Pads

A. Concrete reinforced pads for mounting of equipment (i.e. switchboard, transformers, freestanding panels, etc.) shall be minimum 3000psi, 6" thick with #4 rebar at 12" on center each way. Rebar shall be centered in pad. Pad shall extend 2" beyond equipment and 1.5" above surrounding area. Backfill and compact to 95% maximum dry density at optimum moisture content in layers not to exceed 6" when compacted.

3.05 Grounding

A. Grounding and ground bonding of the electrical installation shall be in accordance with CEC Article 250, and any applicable codes. Ground fittings shall be approved manufactured type, installed and connected to conform with Code requirements.
B. Neutral conductors and noncurrent-carrying parts of equipment at each installation shall be grounded in accordance with applicable code. Ground conductor shall be copper having a current capacity sized in accordance with CEC.
C. All equipment cases, motor frames, etc., shall be completely grounded to satisfy requirements of CEC. Install bond wire in flexible conduit. Install copper bond wire, sized in accordance with CEC, in all nonmetallic raceways and bond to all metallic parts using approved fittings.
D. Service ground conductor shall be connected to a "Ufer" encased ground and bonded to the metallic cold water pipe system and to the metallic natural gas line. 5/8” x 10 ft copper clad ground rods may be used in lieu of the Ufer ground where no footing is available.
E. All connections shall be made with solderless connectors or molded fusion-welding process.
F. Equipment grounding conductors shall be insulated with a continuous green outer finish along its entire length. Conductors size #4 AWG and larger may be identified (with green electrical tape applied half-lapped) at each end and at every point where the conductor is accessible. Tape shall be applied from its point of entry to point of exit or termination.
G. Insulated grounded (neutral) conductors shall be identified with a continuous white outer finish along its entire length. Neutral conductors #4 AWG or larger can be identified by a distinctive white marking (applied half-lapped with white electrical tape) for the last 12 inches at each end.

FOR COUNCIL APPROVAL ONLY

3.06 Field Testing

A. Perform Insulation Resistance (IR) "Megger" Testing per NETA Standards. Submit test results. Provide testing for:
   1. All feeders 100 Amps and higher.
   2. Branch circuits 100 Amps and higher.

B. Each ground rod shall be tested. A ground rod which does not have a resistance to ground of 25 ohms or less shall be augmented by one additional ground rod at no less than 8 feet from each other.

END OF SECTION

FOR COUNCIL APPROVAL ONLY

SECTION 31 10 00
CLEARING AND GRUBBING

PART 1 - GENERAL

1.01 General Requirements

A. The requirements set forth in the General Conditions shall be in addition to the standards provided herein.

B. The requirements set forth in the Supplemental Conditions shall be in addition to the standards provided herein.

1.02 Description

A. Preserve and protect existing site amenities to remain, including, but not limited to, trees, shrubs, underground utilities and other improvements as shown on the Plans. Protection of work shall include affected improvements on adjoining properties.

B. Scope of work includes: site preparation, removal of debris, staging of equipment and materials and securing the site for construction.

1.03 Related Work

A. Section 31 20 00: Earthwork

B. Section 01 57 23: Storm Water Pollution Control

1.04 Protection/Replacement

A. Prior to demolition, erect protective fencing a minimum of one foot (1') beyond the canopy of all trees to remain. The radius of the canopy shall be measured from the longest branch furthest from the trunk. Refer to the environmental document for additional requirements for protective fencing on other existing natural features. For work within or near protected trees, a tree permit may be required.

B. If public use is to be maintained on unaffected portions of the project site, the Contractor shall be responsible for directing pedestrian and vehicular traffic safely around the construction zone. Utilization of temporary fencing, barricades, signage, etc. shall be the responsibility of the Contractor. Safe detours shall be available to the general public at all times during the course of construction.

C. Protection of existing site improvements shown to remain, including, but not limited to, fencing, signs, benches, picnic tables, play structures, shade structures, drinking fountains, concrete paving, concrete wall and curbs,

FOR COUNCIL APPROVAL ONLY

decomposed granite paving, asphalt concrete paving, recreational site improvements, etc. are to be protected and preserved.

D. The Contractor shall be responsible for any damage to and maintenance of all existing street improvements, drainage facilities and irrigation systems and to re-establish these improvements to their original condition as soon as possible after completion of the work in the area, to the complete satisfaction of the Project Manager and Inspector. Realignments or modifications to the existing facilities as shown on the plans are accepted.
E. Survey monuments and markers either shown on the Plans or encountered during the course of construction shall be protected and preserved. The Contractor shall notify the Inspector upon discovery of an unmarked monument, at which time, arrangements for the relocation or adjustment of the monument will be determined. All costs associated with the relocation or adjustment of these monuments shall be the Contractor's responsibility.
F. Burning or burying removed material on-site is prohibited.
G. Where the removal of specific material creates an open hole, pit, trench or other depression, the Contractor shall immediately backfill and compact the areas consistent with requirements outlined in Section 31 20 00 of these Specifications.
H. All items identified in the Plans to remain or identified in the field to remain, removed in error by the Contractor, shall be repaired or replaced to match in equal or better construction, at no cost to the City. The quality of the repair or replacement shall be measured as that existing at contract award.

PART 2 - PRODUCTS

Intentionally left blank.

PART 3 - EXECUTION

3.01 Pre-Construction Site Review

A. Contractor shall review existing site conditions with the Inspector prior to start of construction and document any conditions which adversely affect the satisfactory execution of the work and final acceptance of the project.
B. Commencement of work constitutes acceptance of existing conditions. The Contractor shall, at his expense, be responsible for correcting all unsatisfactory and defective work.

3.02 Clearing

A. Completely remove trees, shrubs, stumps, vines, rubbish/debris, undergrowth, deadwood, structures, and other elements identified to be removed and/or which interfere with the construction as shown on the Plans and as specified.

FOR COUNCIL APPROVAL ONLY

B. Obtain verification from the Project Manager for non-identified items scheduled to be removed prior to actual removal.

3.03 Grubbing

A. Remove all stumps, roots, grasses and weeds in its entirety. Apply systemic weed killer. Confirm weed kill prior to removal.

B. For projects with native soils, once surface material is removed, the Contractor shall stockpile the top twelve inches (12”) of topsoil for use during the final grading phase of work. This soil shall be free of rocks, debris, roots and other undesirable material.

3.04 Utilities

A. Contact USA North 811 at (800) 642-2444, or submit an online ticket at USANorth811.org, prior to commencement of any demolition or excavation work. Provide a minimum of 48 hours’ notice. Verify all utilities entering into and their locations within the project site.

B. Where utilities lie within the project site, but are not a part of the project, the Contractor shall cooperate with the agency or utility company having jurisdiction to maintain its use and the integrity of the structure.

C. Where utilities enter into the project site and taps, connections to or extensions of the utility are identified in the Plans, the Contractor shall coordinate all work with the agency or utility company having jurisdiction to minimize or eliminate disruption of use by the adjacent properties.

D. Verify that all utilities, shown to be removed on the Plans, are inactive and turned off prior to disconnection and/or re-routing, prior to demolition.

3.05 Debris Removal

A. All materials removed as a part of this contract shall become the property of the Contractor and shall be legally disposed of off-site, unless otherwise noted on the Plans.

B. Where a portion of a concrete slab, curb or wall and asphalt concrete paving or curb is to be removed, the concrete shall be cut with a concrete saw at a 90 degree angle so that the edge of the remaining concrete shall form a neat, straight line. Conform to the City of Roseville Design and Construction Standards, latest edition.

END OF SECTION

FOR COUNCIL APPROVAL ONLY

FOR COUNCIL APPROVAL ONLY

SECTION 31 20 00
EARTHWORK

PART 1 - GENERAL

1.01 General Requirements

A. The requirements set forth in the General Conditions shall be in addition to the standards provided herein.
B. The requirements set forth in the Supplemental Conditions shall be in addition to the standards provided herein.
C. The standards set forth in the Caltrans Standard Specifications, latest edition, shall be in addition to the standards provided herein.
D. The requirements set forth by CAL OSHA shall be in addition to the standards provided herein.

1.02 Description

A. Provide all labor, operations and materials necessary for earthwork, including, but not limited to, staking and surveying, grading; excavating; installation of facilities necessary to perform excavation and subsequent removal of such facilities upon completion of work; subgrade preparation; backfilling; and other incidental items necessary for a complete project.
B. This project is a balanced cut and fill project.
C. The intent of the grading plan is to provide positive drainage and to maintain slopes on walkways as required by the Americans with Disabilities Act and California Title 24 throughout the project site. The Project Manager shall be notified immediately of any discrepancies between the Plans and actual field conditions and/or conflicts between the design and code requirements.

FOR COUNCIL APPROVAL ONLY

1.03 Related Work

A. Section 31 10 00: Clearing and Grubbing
B. Section 33 00 00: Utilities
C. Section 32 84 00: Irrigation System
D. Section 32 90 00: Planting
E. Section 26 00 00: Site Electrical
F. Section 01 57 23 Storm Water Pollution Control

1.04 Quality Assurance

A. All work shall conform to local codes and regulations, including standards set forth in the Standard Specifications of the State of California, Business and

Transportation Agency, Department of Transportation (Caltrans), Chapter 70 of the Uniform Building Code and ASTM.

B. Relative compaction shall be the in-place dry density of soil denoted as a percentage of the maximum dry density of the same material. This shall be as determined by ASTM 1557. The optimum moisture is measured by the water content which corresponds to the maximum dry density.
C. Upon discovery of unforeseen subsurface site conditions, the Contractor shall notify the Inspector immediately.
D. Upon discovery of hazardous materials, cease all activity and immediately contact the Fire Department.

1.05 Protection

A. Provide and install all supports, shoring, bracing, underpinning, sheet piling and other methods for the sides of excavations necessary for ensuring safe working conditions for the workmen and to protect adjacent improvements to remain.
B. Provide any and all protection measures necessary to ensure the protection of the workmen, the general public, including children and the project site. These protection requirements remain the Contractor's sole responsibility throughout the duration of the project, including non-working hours.
C. Do not obstruct vehicular, bicycle or pedestrian thoroughfares, unless previously accepted by the City. Provide safe and adequate detours around the construction as required by City and State regulations.
D. Trenches shall be covered at all times when work directly associated with the trenches is not occurring, including non-work hours.
E. During the course of construction, the Contractor shall ensure surface drainage does not create a nuisance onto adjacent properties.

1.06 Erosion Control Measures

A. Construction sites shall have required erosion and sediment control measures in place as required by the SWPPP. If construction is in progress, the Contractor shall ensure the construction site is prepared prior to the onset of any storm. At a minimum, erosion control measures shall include:
    1. Broadcast seed
    2. Drainage area protection
    3. Dust/mud control
    4. Drain inlet filters
    5. Silt fence and straw wattles
    6. Slope protection
    7. Straw bales
    8. Silt controlling devices

FOR COUNCIL APPROVAL ONLY

PART 2 - PRODUCTS

2.01 Base Rock

A. Class 2 aggregate base per Caltrans Standard Specifications, latest edition.

2.02 Drain Rock

A. Drain rock shall be Class 2 permeable, washed, unbroken stone or gravel. Material gradation shall conform to the following:

Sieve Size	Percent Passing
1 inch	100
No. 4	20-50
No. 50	0-10
No. 200	0-5

2.03 Pea Gravel

A. Pea gravel shall be natural stone, free of clay, shale or organic matter, and shall conform to the following:

Sieve Size	Percent Passing
3/8 inch	100
No. 4	47
No. 8	2
No. 16	1

FOR COUNCIL APPROVAL ONLY

2.04 Fill

A. Structural Fill shall conform to Caltrans Standard Specifications or the accepted site-specific geotechnical report generated for the project.
B. Fill for non-structural areas shall conform to the following standards:
   1. Plasticity: ASTM D4318-84
   2. Expansion Index: No greater than twenty (20)
   3. Testing: UBC 29-9 and ASTM D422-72
   4. Particle Size: No greater than one inch (1”)

2.05 Topsoil

A. The top eight to ten inches (8” – 10”) of native soil containing more than three percent (3%) organic material. Topsoil shall be free of rocks no larger than one inch (1”) in diameter, free from subsoil, roots, heavy or stiff clay, course sand, destructive seeds, noxious chemicals, brush, debris, litter and other undesirable materials.
B. For any import soil to be used in turf/planting areas, submit a soils analysis with soil amendment recommendations (for plant growth) for review and acceptance prior to placement on-site. Soils test information shall be as outlined in Section 32 90 00: Planting – 1.06.

2.06 Soil Sterilant

A. Sterilizer shall be standard, quick-acting, short-lived and non-selective weed and grass killer, commonly used under roadway/transportation projects. Application of the sterilant shall pose no short or long term health threats to the installer or the general public. Submit analysis for approval prior to applying.

2.07 Sand

A. Granular, fine, free of organic matter, mica, loam or clay material.

PART 3 - EXECUTION

3.01 Construction Staking

A. The layout of all work shall be performed by a California State licensed land surveyor provided by the Contractor.
B. Notify the Inspector immediately of any discrepancies between actual field conditions and the Plans. Minor field adjustments may be necessary in order to fulfill the intent of the Plans.
C. Non-notification of discrepancies between actual field conditions and the Plans by the Contractor, in writing, shall indicate his acceptance of such field conditions. Adjustments/modifications to the construction to accommodate the inconsistencies (without notification) shall be at no additional cost to the City.

3.02 Excavation

A. All excavations shall be as noted on the Plans. Excavations shall include accommodation of base material.
B. Do not over-excavate. Excavations shall provide appropriate space to install shoring, bracing, formwork, etc., as needed to ensure the safe and proper construction of the work.
C. Take every precaution to prevent water from entering, softening, and undercutting excavated areas, including, pits, footings, trenches, etc.
D. Notify the Inspector immediately upon discovery of unsatisfactory soils materials or unforeseen site conditions. Excavation shall include the complete removal of the unsatisfactory material and its legal disposal thereof.

3.03 Site Grading

A. A grading permit is required to be obtained by the Contractor prior to commencing any earthwork.
B. Grading shall include adjacent transition areas, new elevations/contours as shown on the Plans. All subgrade areas shall be graded parallel to the finish grades and contours and shall be uniform in slope. Transition areas shall provide a smooth connection between new and existing grades and shall not create additional drainage or ponding onto adjoining properties.

FOR COUNCIL APPROVAL ONLY

C. Surface grades shall provide for positive drainage away from structures and footings, and shall be uniformly smooth throughout.
D. Rough grading shall:
   1. Be graded to a tolerance of 0.10 feet, plus or minus for planted and turf areas.
   2. Be graded with a tolerance less than .04' from specified grade and cross section for subgrade in which pavement, curbs and other structural elements are to be placed immediately above.
   3. Provide a subgrade surface free of exposed rocks, stones and boulders.
   4. Provide a subgrade surface free of depressions, pits, etc., with proper backfill and compaction. See paragraph 3.04 below.

3.04 Placement of Fill Material

A. Prior to placement of fill material, the Contractor shall:
   1. Obtain approval of the subgrade surface from the Inspector.
   2. Scarify, dry and compact soft and/or wet areas.
   3. Remove and replace unsuitable subgrade material to the satisfaction of the Inspector.
   4. Take all necessary corrective action.
B. Do not use topsoil as fill or backfill material, unless otherwise accepted in writing.
C. Fill shall be placed in the following manner:
   1. Accepted engineered fill material for structural slabs and areas to be paved shall be placed in six-inch (6") loose thickness, uniform layers over the entire area.
   2. Fill material in planted areas shall be placed in twenty-four inch (24") maximum loose thickness throughout the areas to receive fill.
D. Aerate or water each lift to obtain the required compaction rate indicated on the Plans. Thoroughly mix material to ensure proper moisture content for compaction. Repeat the operations until grades, as shown on the Plans, are obtained. Jetting of trenches shall be reviewed and accepted by the Inspector prior to performance of work.
E. Do not place fill when the subgrade is frozen, muddy or wet. Allow conditions to thaw and dry out before resuming operations.
F. Use hand tampers or vibrating compactors around foundations walls, retaining walls and other structural elements. Do not use large equipment in these areas and do not begin compaction operations until the bearing surfaces have reached its design strength.
G. Fill around existing trees to remain shall not exceed twelve inches (12").
   1. Minor fill (6" or less) shall utilize topsoil and shall be placed by hand. Do not cover crown of trunk. Feather grades to the extent possible.

FOR COUNCIL APPROVAL ONLY

2. Fills between 6” and 12” shall utilize 3/4” pea gravel on grade, placed up to three inches (3”) below finish grade. Apply topsoil, by hand, to meet finish grade elevations. Feather grades to the extent possible.

H. Construct mounds from on-site material. The core of the mound (1’ below finish elevations) shall be compacted to 90%. The top twelve inches (12”) shall be compacted to 85%. Place topsoil in the top twelve inches (12”).

I. Place topsoil in all turf and planting areas a minimum of twelve (12) inches deep. See Section 31 10 00, 3.03-B: Clearing and Grubbing.

3.05 Trenching, Backfilling and Compacting

A. For trenches greater than five feet (5’) in depth, submit an OSHA permit related to the work.

B. All trenches shall be straight, true and cut vertical at 90 degrees to the surface plane.

C. For trenches through existing paved surfaces, use a concrete saw or other tool to achieve straight, clean lines. Replace paved surface to the same or better condition as existing prior to cut.

D. Do not over-excavate. Maintain bearing surfaces true, level and undisturbed to the extent possible.

E. Trenches shall be kept dry and frost-free. Do not allow standing water to collect.

F. Do not allow trenches to remain exposed at any time when work directly related is not occurring. Cover all trenches during non-work hours.

G. Bedding for all trenches to receive pipes shall be as follows:

1. Bedding material shall be consistent with the City of Roseville Design and Construction Standards, latest edition.
2. Pipe shall lie completely on bedding. Pipe fittings or joints shall not bear weight.
3. Bedding shall be uniform throughout the length of pipe.

H. Initial backfill for storm drains, sewer lines and electrical conduit shall conform to the applicable City standard set forth by the Department having jurisdiction.

I. Backfill beyond the initial operations shall be native soil, placed in twelve-inch (12”) lifts. Compaction for trenched areas shall be 95% for parking lot, driveway and roadway areas; 90% for hardscape (i.e. walkways, picnic pads basketball and tennis courts); and 85% in areas to be planted. Place topsoil over trenches in planted areas. Upon completion, all trenches shall be filled flush with adjacent finish grades.

J. Compaction tests shall be required for trenched areas, hardscape areas and areas where fill over two feet in depth will be placed. The Inspector shall determine the number of tests and the locations. Re-tests shall be the Contractor’s responsibility.

FOR COUNCIL APPROVAL ONLY

K. Potholing shall be required in areas where existing utilities are indicated. Hand digging may be required.

3.06 Soil Sterilant

A. Soil sterilant shall be applied to areas where paving is to be installed. The worker applying the sterilant shall take every precaution to avoid overspray of sterilant onto areas to be planted. The sterilant shall be placed no further than six inches (6”) beyond the edge of pavement.
B. Soil sterilant shall not be applied in inclement weather and windy days.

3.07 Drainage Areas

A. All bare areas, regardless of slope, within 50 feet of natural drainages shall be covered with straw and pressed in place.
B. No grading or trenching, except as required for erosion or sediment control, shall occur within 35 feet from the centerline of perennial and intermittent drainage swales between October 5 and April 1 unless approved by the Engineering Division, as well as any other governmental agency which may have additional jurisdiction and/or requirements.

3.08 Dust/Mud Control

A. Adjacent Streets: Adjacent street frontages shall be swept at least once a day to remove silt and other dirt which is evident from construction activities.
B. Construction Vehicles: The Contractor is responsible for cleaning construction vehicles leaving the site on a daily basis to prevent dust, silt, mud and dirt from being released or tracked offsite. Adjacent streets shall be swept clean daily.
C. Grading Spoils: Dry stockpiles of soil shall be watered to prevent the generation of airborne dust. Trucks transporting dry soil shall be covered with tarpaulins.
D. Water: Water shall be sprayed on all exposed earth surfaces during clearing, grading, earth moving and other site preparation activities. The exposed earth shall be watered throughout the day to minimize dust. The Contractor shall obtain a hydrant permit from the Environmental Utilities Department.
E. Wind Allowances: Grading activities shall be restricted or halted when winds exceed 15 miles per hour as deemed necessary by the Public Works Inspector.

END OF SECTION

FOR COUNCIL APPROVAL ONLY

FOR COUNCIL APPROVAL ONLY

SECTION 32 84 00
IRRIGATION SYSTEM

PART 1 - GENERAL

1.01 General Requirements

A. The requirements set forth in the General Conditions shall be in addition to the standards provided herein.
B. The requirements set forth in the Supplemental Conditions shall be in addition to the standards provided herein.

1.02 Description

A. Furnish all labor, materials and equipment for the complete installation of an automated irrigation system, including all necessary appurtenances for proper operation, noted or implied, as shown on the Plans and as specified herein.
B. Water usage, meter costs, connection fees, testing and other associated utility costs are considered direct costs and is the responsibility of the Contractor until the project is accepted.
C. Installation of the water meter shall be by the City.

1.03 Related Work

A. Section 32 90 00: Planting
B. Section 26 00 00: Site Electrical

1.04 Quality Assurance

A. All work shall comply with local and state laws, codes, regulations and requirements which govern any portion or all of the work contained in this Section. These include, but are not limited to, the latest editions of:
   1. City of Roseville Park Construction Standards,
   2. City of Roseville Design and Construction Standards,
   3. City of Roseville Electric Department Standard Specifications,
   4. Local, state and federal electrical codes, manuals and guidelines, and
   5. Local, state and federal plumbing codes, manuals and guidelines.

1.05 Submittals

A. Submittals for specified items are not required for Parks or Streetscape projects, unless specifically listed below. However, submittals are required for any proposed substitutions or deviations from the parks Plans or Specifications. For Streetscapes, no substitutions will be accepted. The Contractor shall submit a materials summary sheet indicating which items will be installed as specified

FOR COUNCIL APPROVAL ONLY

and which items are proposed for substitutions. The Contractor shall submit proof of order within ten (10) working days of the Notice to Proceed, indicating all specified materials have been ordered, noting “as specified” or “substitution proposed”. Submittals are required on all irrigation items.

1.06 Explanation of Drawings

A. The drawings are diagrammatic and do not reflect all offsets, fittings and other miscellaneous items required for a complete and operable irrigation system. It shall be the Contractor’s responsibility to investigate all existing site conditions, become thoroughly familiar with the site, and provide all labor, materials and equipment required for the installation of the irrigation system.
B. Avoid conflicts between other trades and the installation of the irrigation system. Minor adjustments to avoid such conflicts shall be made in the field. Major discrepancies between actual field conditions and the Plans shall be brought to the attention of the Project Manager. The lack of notification shall indicate the Contractor assumes full responsibility for any revision deemed necessary to ensure proper installation.

1.07 Product Delivery, Handling and Storage

A. All materials shall be delivered bearing manufacturer’s label with size, type and model number (if applicable) clearly marked.
B. All pipe shall be delivered in a vehicle which allows the material to lie flat without concentrated weight or stress at any point.
C. Unload all materials with care so as to avoid damage. Store materials in a covered area and do not expose PVC pipe to extreme sun or heat. Store pipe lying flat.
D. Do not install any material that has been damaged. Replace all material found to be damaged.

1.08 Record Drawings

A. The Contractor shall keep an accurate record of the as-built conditions of the irrigation system. These records shall be updated daily and kept at the construction site. At any time, the Inspector may examine the conditions of the “as-builts” to ensure compliance of the above.
B. Dimensions shall be recorded from two (2) permanent points of reference.
C. The City may at its discretion withhold progress payments to the Contractor if the as-built records are not updated to the satisfaction of the City.

FOR COUNCIL APPROVAL ONLY

PART 2 - PRODUCTS

2.01 General

A. All materials specified shall be new, bearing the brand name, type, serial numbers and model number as shown on the Plans and as specified herein, unless otherwise accepted in writing.

2.02 Backfill Material

A. Backfill shall be clean, screened, on-site material, free from organic material, large clods of earth and/or rock larger than one (1) inch in diameter, trash, debris, rubbish, tree trunks, broken concrete or asphalt and other unacceptable material.

B. Material larger than one (1) inch shall be removed from site and legally disposed. All removal shall be the responsibility of the Contractor.

2.03 Meter

A. Meter shall be as shown on the Plans and as required by the City of Roseville Environmental Utilities Department.

2.04 Backflow Prevention Device

A. Backflow Prevention Device shall be as shown on the Plans.

B. Cover shall be insulated, freeze-proof, removable and lockable, manufacturer and model per the City of Roseville Design and Construction Standards or accepted equal.

2.05 Filter (Recycled Water Only)

A. Amiad Filtration Systems, filter with scanaway semi-automatic assembly and 130 micron filter screen

1. For 2”, Plastic Super-T Semi-Automatic Filter.
2. For 3” and above, Steel In-line Semi-Automatic Filter.
3. Include Scanaway 130 micron filter element.
4. Match line size of recycled water meter, down to 2” minimum.
5. Include lockable protective frost cover blanket.

2.06 Flow Sensor and Master Valve

A. Calsense Controllers:

1. Flow sensor shall be a Calsense Ultrasonic Flow Meter (FM-2U), or accepted equal. Flow sensor shall be accurate to +/- 2% of full scale. Flow sensor body shall be constructed of Schedule 80 PVC for sizes up to 4”, and saddle taps for sizes 6” and above.
2. Master valve(s) shall be Superior, 3300 series, normally open, electric globe valve, constructed of brass with dirty water protection and No Minimum Flow

FOR COUNCIL APPROVAL ONLY

feature. For recycled water systems, include -RW Recycled Water designation with purple handle for identification.

3. Flow meters to be constructed consistent with the Calsense specifications.
4. Valve boxes for master valve and flow sensor shall be 18” (jumbo) green rectangular rigid plastic valve boxes with lockable lids and extensions by Carson Industries, LLC or accepted equal. Valve box lid shall be colored green in potable water system applications and purple for recycled water system applications.

2.07 Pipe

A. PVC Pressurized Mainline

1. For lines three inch (3”) or larger: polyvinyl chloride (PVC) 1120-1220, SDR 21, Class 200 rubber gasketed pipe, and NSF accepted per Standard No. 14, Type I, Grade I. Conform to:

Material	ASTM
Pipe	D1784, D2241
Rubber Gasket	F477

2. For lines two and one half inches (2-1/2”) or smaller: Schedule 40 polyvinyl chloride (PVC) 1120-1220, and NSF accepted per Standard No. 14, Type I, Grade I. Conform to:

Material	ASTM
Pipe	D1784, D1785

B. PVC Non-Pressurized Lateral Lines

1. Schedule 40 polyvinyl chloride (PVC) 1120-1220, SDR 21.0, NSF accepted per Standard No. 14, Type 1, Grade II.

C. Recycled Water

1. Pipes shall meet the standards outlined in Sections 2.08, A and B above, unless otherwise noted in the City of Roseville Design and Construction Standards for recycled water, latest edition.
2. All pipes containing recycled water shall be purple, NSF accepted and conform to the City of Roseville Design and Construction Standards, latest edition.

2.08 Fittings and Nipples

A. Fittings for Mainline Pipe:

1. For all control valves on mainlines three inches (3”) and larger, use painted, ductile iron saddle taps with double stainless steel straps and nuts. Model #202 by Romac Industries, Inc. or accepted equal.
2. For all other connections on mainlines three inches (3”) and larger mainline pipe, use glued schedule 80 fittings.

FOR COUNCIL APPROVAL ONLY

3. For all control valves on mainlines two and one half inches (2-1/2”) or smaller, use glued schedule 80 fittings.
4. For all other connections on mainlines two and one half inches (2-1/2”) or smaller, use glued schedule 40 fittings.

B. Fittings for Solvent Weld Pipe- Laterals:
1. Schedule 40 polyvinyl chloride (PVC), standard weight, conforming to ASTM D2466-73.
2. Weld-on #P-70 primer and Weld-on #711 gray glue or accepted equal.
3. Teflon tape for all threaded PVC fittings.

C. Plastic Nipples shall be Schedule 80, Type 1, Grade 1, polyvinyl chloride (PVC), threaded at both ends, and conforming to ASTM D1784 -85. Nipples shall be uniformly gray.

D. Fittings for Recycled Pipe:
1. Fittings shall meet the standards outlined in Sections 2.09, A, B and C above, unless otherwise noted in the City of Roseville Design and Construction Standards for recycled water, latest edition.

2.09 Swing Joints

A. Swings joints shall be as shown in the City Parks Construction Standard detail. Schedule 40 threaded PVC triple swing joints or an accepted equal.

2.10 Electric Remote Control Valve

A. Sizes as shown on the Plans. All valves shall be Rainbird PEB series or accepted equal and shall contain the following:
1. a globe-type electric remote control, normally closed diaphragm type with slow opening and closing action,
2. encapsulated solenoid type actuation,
3. a minimum rating of twenty-four (24) volts,
4. sixty (60) cycle,
5. two to five (2-5) watts,
6. a manual flow adjustment with shut-off provisions,
7. provisions for an external “bleed” of the diaphragm chamber for manual operation.
8. a ball valve on the inlet.
9. Schedule 80 PVC threaded fittings from main line to valve.

B. Valve boxes shall be rectangular, rigid plastic valve boxes with lockable lids and extensions by Carson Industries, LLC or accepted equal. Valve box shall be sized appropriately to house entire valve assembly with space to accommodate maintenance access. Valves for drip zones require Jumbo size boxes.

FOR COUNCIL APPROVAL ONLY

1. Boxes shall be colored green in potable applications, and purple for recycled water applications.
2. Valve boxes used on recycled water systems shall be permanently colored purple through the manufacturer. Boxes painted purple will be rejected.
3. Label lids using heat branded identification, T:Turf, S:Shrubs, B:Bubblers

C. Controller station identification number shall be standard yellow tags with permanent numbers by Christy or accepted equal.

2.11 Root Watering System

A. Provide pre-manufactured root watering system.
1. Pressure compensating bubbler. See irrigation sheets for flow rates.
2. Check valve where applicable to prevent low head drainage.
3. Swing joint assembly
4. Locking grate top on semi-rigid mesh tube. Use purple grate for Recycled water systems
5. Filter fabric sleeve

2.12 Irrigation Heads

A. All irrigation heads shall conform to type, size, precipitation rate, gallons per minute discharge, pressure and throw radius as shown on the Plans, unless otherwise accepted in writing.
B. In all available models, all irrigation heads shall have stainless steel risers, unless otherwise approved in writing.
C. For recycled water applications, irrigation heads shall be colored purple, have debris pocket, and wiper seals with 3 touch points.
D. Irrigation heads shall have built-in pressure regulation for pop up sprays and/or water-efficient heads.
E. Include built-in check valve where applicable to prevent low head drainage.

2.13 Drip Irrigation

A. Sub-surface dripline.
1. Flexible polyethylene tubing shall have factory-installed pressure-compensating, inline emitters spaced evenly per listed spacing.
2. Emitter shall incorporate elemental or ionic copper root intrusion prevention technology, and shall be warranted by the manufacturer to be free of emitter plugging due to root intrusion for a period of fifteen (15) years minimum.
3. Emitter shall have a built-in check valve that will hold back, at minimum, an 8.5' column of water.
4. Dripline for use with recycled water systems shall be properly and permanently marked for non-potable use.

FOR COUNCIL APPROVAL ONLY

5. Acceptable products include Rainbird XFS-CV Series or Netafim Techline HCVXR Series, or approved equal.

B. All fittings shall be constructed of injection molded, brown plastic having a nominal outside dimension of 17mm (0.56”). Female and male threaded ends shall be capable of mating to standard PVC pipe with tapered threads.

C. Line flushing valve
   1. Valve shall be schedule 40 PVC ball valve with brass hose thread adapter.
   2. Valve box shall be rigid plastic, with lockable cover by Carson Industries, LLC or accepted equal. Boxes shall be colored green in potable applications, and purple for recycled water applications.
   3. Drip system operation indicator shall be Rainbird 1812 Pop-up spray body with 4-VAN nozzle set to 0-degree pattern, with Rainbird SA-125050 swing assembly and XFF-TFA barbed bt ½” FIPT fitting, or accepted equal.

D. Pressure Regulating Filters shall be Rainbird PRB Pressure Regulating Basket Filter, or approved equal, and shall include: Basket style body and jar-top cap constructed of heavy-duty glass-filled, UV-resistant polypropylene, with 150 PSI (10,3 bar) operating pressure rating. Standard 200 mesh (75 micron) filter screen constructed of stainless steel attached to propylene frame. Normally-open in-line pressure regulating device, constructed of durable, UV resistant non-corrosive material able to accommodate an inlet pressure rating of not less than 150 PSI (10,3 bar), with preset outlet pressure of approximately 40 PSI (2,8 bar).

2.14 Thrust Blocks

A. All thrust blocks shall be concrete. The size of the blocks shall be determined by the average safe soil-bearing load of 700 lbs. per square foot.

B. Polyethylene sheeting at thrust blocks shall be 6mil.

2.15 Quick Coupler Valves

A. For potable water, quick coupling valves shall be Rainbird #44LRC or accepted equal. For recycled water, quick coupling valves shall be Rainbird #44NP lockable or accepted equal. All quick coupling valves shall be:
   1. brass or bronze with one (1) IPS female pipe connection,
   2. two piece body with a removable upper portion (for replacement), and
   3. durable yellow covers for potable and purple for recycled.

B. Valve keys shall be brass or bronze and shall be of the same manufacturer and size as the valve.

C. Valve box shall be rigid plastic, a minimum of ten inches (10”) in diameter with lockable cover by Carson Industries, LLC or accepted equal. Boxes shall be colored green in potable applications, and purple for recycled water applications.

FOR COUNCIL APPROVAL ONLY

D. Where recycled water is used, conform to the City of Roseville Design and Construction Standards.

2.16 Manual Valves

A. For pipe four inches (4") and larger gate valves shall be:
   1. located where shown on the Plans,
   2. flanged with Class 125 cast iron body,
   3. bronze trimmed with a non-rising stem,
   4. square operating nut,
   5. able to withstand a cold water pressure of 150 pounds per square inch, and
   6. sized to match the pipeline which the valves serve, unless otherwise shown on the Plans.

B. For pipe three inches (3") or smaller
   1. located where shown on plans
   2. lead free
   3. Able to withstand cold water pressure of 300 pounds per square inch
   4. sized to match the pipeline which the valves serve, unless otherwise shown on the Plans.
   5. Nibco T-113-LF or approved equal.

C. Pipes which feed directly into a remote control valve, ball valves shall be installed and shall:
   1. allow for manual operations,
   2. rapid on/off , drip-tight shut-off control,
   3. be constructed of bronze or brass with heavy-duty handle,
   4. operate up to 22 gallons per minute,
   5. operate between 15 and 150 pounds per square inch, and
   6. be sized to match the pipeline which the valves serve, unless otherwise shown on the Plans.

D. Valve box shall be rigid plastic, a minimum of ten inches (10") in diameter with extensions and lockable cover by Carson Industries, LLC, as shown on the Plans or accepted equal. Boxes shall be colored green in potable applications, and purple for recycled water applications.

2.17 Automatic Irrigation Controller

A. Automatic controllers shall be Calsense CS3000 or accepted equal. Each controller shall include:
   1. CS3-32 – Calsense (32) Station Base Model,
   2. FM-1.5U – Flow Meter (Ultrasonic),
   3. -S1– Stainless Steel Enclosure with 1 hole for Stubby Antenna.
   4. CS3000 Transient Protection
   5. TP-110 – AC Line Protection,

FOR COUNCIL APPROVAL ONLY

6. GR-STUBBY – Antennae w/2ft cable
7. On/Off Switch
8. GFI electrical outlet inside enclosure.

B. Third-Party Communications hardware required:
1. Sierra Wireless AirLink RV55 LTE-A PRO Router (#1104303)
2. Router AC Adapter (#2000579)
3. AT-5 (or higher) Ethernet Cable - 1ft (#A3L781-01-BLU)

C.

2.18 Control Wires

A. Direct burial solid copper wire AWG-U.F. 600 volt.

B. Common wire and two spare wires shall be minimum #12-gauge.

C. Pilot wires shall be red, minimum #14-gauge. Wire gauge shall be, at minimum:

Wire Gauge	#14	#12	#10	#8
Max. Distance (ft.)	2,500	3,250	4,000	4,800

D. Splices:
1. Wire connections at remote control valves only shall utilize 3M direct bury splice kit model #DBY (yellow) or model #DBR (red).
2. All other splices, including line splices, connections to flow meters and other sensors shall utilize 3M Scotchcast 3570G Connector Sealing Packs, no known equal.

E. Wiring colors shall be:

USE	**COLOR**
Flow	Yellow
Master	Blue
Pump	Black
Valves	Red
Common	White
Spare	Orange
Tracer	Green

FOR COUNCIL APPROVAL ONLY

2.19 Sleeves

A. Schedule 40 PVC 1120-1220 and two times the diameter of the pipe to be accommodated by the sleeve, one (1) for control wires and one (1) for main line, and one (1) for lateral lines.

B. Maximum one (1) line per sleeve.

C. Add one (1) spare, same size as largest.

2.20 Tracer Wire

A. Insulated solid copper wire, minimum #12 gauge. Color shall be green.

PART 3 - EXECUTION

3.01 Site Conditions

A. Prior to start of irrigation work, review the site conditions to verify that stub- outs, points of connections, sizes of the points of connections, water pressure and other essential items necessary for irrigation work to commence are as shown on the Plans and as indicated in the Specifications.
B. Notify the Inspector immediately of any existing conditions which are unacceptable for the commencement of irrigation work.

3.02 Coordination of Work

A. Coordinate all work with other trades.
B. The irrigation plan is diagrammatic. Whenever possible, locate all pipes in planted or turf areas. Do not scale off of the Plans. Where field conditions have changed, notify the Inspector immediately.

3.03 Excavation and Trenching

A. Trenches shall be dug straight and in such a manner as to completely support the pipe continuously along the bottom of the trench. In rocky conditions, over-excavation and placement of clean bedding material may be required to ensure protruding rocks do not place undue stress on pipes. Trench layout shall follow that shown on the Plans, except where accepted by the City.
B. The following minimum cover shall be provided for pipe:

Pipe Type	Minimum Cover
Pressurized Mainlines	24”
Non- Pressurized Lateral Lines	18”
Domestic Water Lines	24”
Control wires	24”
PVC Sleeves under Paving	18”
PVC Sleeves under Auto X-ings	24”

C. Install detection wire, looped in and out of valve boxes and attached to all irrigation mainlines.
D. High voltage wires shall not be installed in the same irrigation water line trench.

FOR COUNCIL APPROVAL ONLY

3.04 Testing and Flushing

A. Pressure Testing shall occur only when the following conditions can be fulfilled:

Item Description	Condition
Quick coupler valves	Installed and capped
Electric remote control valves	Installed
Flow valve	Installed and open
Ball/Gate valves	Installed and open

Lateral lines	Disconnected
Welded PVC joints	Cured at least 24 hours
Pipe	Center loaded with backfill
Concrete Thrust Blocks	Installed and cured at least 48 hours
Couplings and fittings	Exposed
Detection wire	Installed

B. A pressure gauge shall be installed at the lowest point of the line. Continuous pressure shall be applied at a rate of 125 psi for all mainlines. The pressure shall remain stable for a minimum of two hours with no detectable leakage. Upon completion of the test, a complete examination of the line shall be conducted by the City. Leaks resulting from the test shall be repaired and the line shall be re-tested. This process shall be repeated until the line passes the leakage test.
C. All lines and risers shall be flushed prior to final installation of irrigation heads. All control valves shall be left open during the flushing process.

3.05 Backfilling and Compacting

A. Backfilling of trenches shall not occur until all tests and reviews have been performed. See inspection record contained in the Parks Construction Standards, latest edition. Any trench that is prematurely backfilled may be required to be re-dug for review.
B. Compaction of the trenched areas shall meet the following compaction rates of 95% in areas to receive paving and 85% in areas to be planted.
C. Do not flood trenches unless otherwise accepted by the City.
D. Sunken trenches shall be re-finished flush with the adjacent grades.

3.06 Backflow Prevention Device and Enclosure

A. Install per local codes and manufacturer's instructions.

3.07 Flow Meter Installation

A. Install per local codes and manufacturer's instructions.
B. All flow meters shall be installed in ground.
C. Install 3/4" conduit from irrigation controller to flow meter valve box. Install a pull box every 100'.
D. Valve box lids shall be permanently marked identifying FM for flow meter and MV for master valve and GR for grounding rod with heat branding using stencils in a uniform location on all boxes throughout.

3.08 Pipe Installation

A. Install irrigation pipe in planted areas whenever possible.
B. All pipe and fittings shall be cleaned and free from dirt, dust and moisture.

FOR COUNCIL APPROVAL ONLY

C. Pipe may be assembled along the trench at grade to avoid undue strain on the pipe or the fittings. All solvent weld connections shall be primed before applying glue. Snake the pipe within the trench to compensate for expansion and contraction.
D. All PVC pipe and metal valve connections shall be made with threaded fittings consistent with drawings PK-15 and PK-16 of the City of Roseville Parks Construction Standards.
E. All PVC-to-PVC threaded connections shall be made with Teflon tape.
F. Install concrete thrust blocks in locations where rubber gasketed irrigation mainlines change directions, e.g. ells, tees; as required on other lines and fittings; and at the termination point of the mainline. Do not conduct a pressure test within 48 hours of the thrust block pours. The size of the thrust blocks shall be per manufacturer's instructions and shall be adequate in size to absorb thrusts up to the maximum internal water pressure. Refer to 3.18 Thrust Blocks.
G. Use glued fittings for all connections inside of a sleeve and within 20' of a sleeve.
H. When multiple pipes are in the same trench, provide a minimum 2" horizontal separation between pipes, or equal to diameter of pipe, whichever is larger. Do not stack pipes vertically.

3.09 Electric Remote Control Valves

A. Install per local codes, manufacturer's instructions, City of Roseville Design and Construction Standards and as shown on the Plans.
B. Install one (1) electric remote control valve per box and whenever possible, group valve boxes together. Align boxes in a straight and neat row and flush to finish grade. Provide a minimum of six (6) inches between boxes.
C. All valves shall be tagged for easy identification of valve number. Valve box lids shall be permanently marked identifying valve number and controller letter with heat branding using stencils in a uniform location on all boxes throughout.
D. Each valve shall be separately saddle tapped. Manifolded valves shall be rejected.
E. Locate valve boxes outside of turf areas, adjacent to paving, i.e. sidewalks, hardscape, etc. except where shown on the Plans.
F. Provide a minimum of eighteen (18) inches of a complete set of spare control wires, looped, within all control valve boxes.

3.10 Irrigation Heads

A. Install all heads where shown on the Plans and as specified herein.
B. Turf rotary pop-up heads shall be placed two (2) inches from any edge of adjacent walkway, concrete mow band, concrete curb, header board or other hardscape edging, or as required by current WELO regulations.

FOR COUNCIL APPROVAL ONLY

C. Rotary pop-up heads shall be installed flush with the top of finish grades of turf or planting areas.
D. Sprinkler head riser nipples sizes shall match or be the same as the riser opening of the sprinkler body.
E. Install sprinkler heads with internal check valves where heads are located in low drainage areas, i.e. bottom of berms, bottom of drainage swales, toe of slopes, etc.
F. Install all heads perpendicular to ground surface with an offset from the edge of pavement as indicated in the details.

3.11 Drip Irrigation

A. Drip irrigation is to be installed in a grid pattern layout of equal spacing between rows, unless otherwise noted on approved plans.
B. All drip irrigation shall be installed sub-surface, per manufacturer's specifications. Staple all tubing to soil at 5 feet on-center spacing prior to backfilling.
C. Drip line shall be installed prior to plant installation, with the exception of 15-gallon and larger plant container sizes, which may be installed first at the discretion of the contractor.
D. Line Flushing Valves are to be installed below grade, as detailed, in a valve box with bolt-down lid to allow for periodic inspection and flushing.
    1. Minimum of One (1) Line Flushing Valve shall be installed for every fifteen (15) GPM of zone flow, and at every termination point within a zone, and shall be installed at a point farthest away from the source (typically on an exhaust header) as possible.
E. Pop-up drip system operation indicators shall be placed within eighteen inches (18") of each Flush Valve and shall not be placed such that it will be obstructed by vegetation. Place minimum twelve (12) inches from adjacent hardscapes.
F. If required, Air/Vacuum Relief Valves shall be installed below grade in valve boxes to allow for periodic inspection.
G. Valve box lids shall be permanently marked identifying LF for Line Flush valve and AR for Air/vacuum Relief with heat branding using stencils in a uniform location on all boxes throughout.

3.12 Quick Coupler and Gate Valves

A. Install per local codes and manufacturer's instructions.
B. Locate valve boxes flush with finish grade, twelve (12) inches from walkways, curbs, header boards, etc., and within planted area whenever possible.
C. Install one (1) valve per box.

FOR COUNCIL APPROVAL ONLY

D. For quick coupler valves, install at 100 feet on center to the extent possible. Provide a 24” steel support staked adjacent to the riser using two (2) stainless steel clamps.
E. For gate valves, install at locations indicated on the Plans.
F. For valve boxes installed below grade, provide 3M ball markers.
G. Valve box lids shall be permanently marked identifying GV for gate valve and QC for quick couplers, and SB for splice boxes with heat branding using stencils in a uniform location on all boxes throughout.

3.13 Automatic Controller

A. Install per local codes and manufacturer’s instructions within the specified enclosure.
B. Provide single Paige Cable P-7171D installed in conduit between all controllers.
C. Provide all necessary wiring for a complete installation between the controller and the valves.
D. Above grade wiring shall be installed in metal conduit, unless otherwise accepted. Securely mount conduit onto enclosure or wall and paint to match the adjacent surface.
E. Provide a grounding rod and bonding for each enclosure as required for lightning protection. Grounding rod shall be consistent with drawing PK-1 of the City of Roseville Parks Construction Standards. Install separate grounding rods for each enclosure where bonding is impractical.
F. Label each controller, using permanent markings, with the letter identification indicated on the Plans. Affix label on the inside of the controller cabinet door.
G. Install 110V outlet (GFIC) inside controller enclosure.
H. Provide two (2) reduced as-built irrigation diagrams, laminated and color-coded indicating controller letter, valve/station numbers, valve size, operating pressure, gallons per minute and type of planting for each valve. See Section 01 10 00: Summary of Work 1.15B.
I. Ground test to be conducted after installation. Test results shall not exceed 25 ohms.

3.14 Control Wires

A. Wherever possible, install control wires in common trenches with mainline. The wires shall be taped in bundles at ten (10) feet on center and laid to the side of the pipe. Provide slack between ties to allow for contraction.
B. Wire valve to controller as shown on the plans.
C. Where runs are long, provide an extra three (3) feet of extra common and control wires looped at 200’ intervals. Snake wires within trenches to allow for contraction.

FOR COUNCIL APPROVAL ONLY

D. Line splices shall occur in valve boxes at grade, label and allowed only on lengths greater than 2500'. Show locations on as-built plans.
E. Do not wrap wire around pipe or allow any wiring to be placed in concrete or concrete thrust blocks.
F. Install two (2) spare wires starting from the controller, looped to each valve box to the furthest valve box, without splices.

3.15 Tracer Wire

A. Install tracer wire on top of the mainline.
B. Provide a twelve-inch (12") loop in and out of each valve box. Solder all splices.
C. Where potable water lines are placed in a separate trench, install a tracer wire on top of the potable water line per City of Roseville Design and Construction Standards
D. Tracer wire shall be tested during review and pressure test of the mainline.

3.16 Sleeves

A. Install sleeves under all pavement and as shown on the Plans.
B. Install sleeves at the depths indicated in Section 3.03B above.
C. Extend sleeves a minimum of twelve (12) inches beyond the edge of pavement.
D. At every sleeve location installed in roadways, provide a spare PVC sleeve capped at each end and marked with a 3M ball marker.

3.17 Thrust Blocks

A. Install polyethylene sheeting between mainline and concrete.
B. Thrust blocks shall be formed against a solid trench wall. The thrust block cavity shall be in undisturbed soil or previously placed compacted backfill that yields an acceptable allowable bearing pressure.
C. Concrete thrust blocks shall not be poured on valve wires.

3.18 Cross Connection Testing for Recycled Water Systems

A. The Recycled Water System shall be tested for cross connection in accordance with Uniform Plumbing Code Appendix J prior to use.
B. All testing of Recycled Water Systems must be performed utilizing a potable water source via a construction water connection per City of Roseville Construction Standards. No Recycled Water may enter a Recycled Water System until all testing is successfully completed.
C. At the time a cross connection test is to be performed, construction on both the Potable and Recycled Water Systems being tested must be complete and both systems fully operational and functioning as designed.
D. Cross connection testing shall be performed in the system by City forces with the assistance of the contractor. The test must be coordinated through the

FOR COUNCIL APPROVAL ONLY

Parks Department Inspector. Allow one week's notice to schedule the cross-connection test. Depending on complexity of the site, a preliminary field meet may be required.

3.19 Coverage Test

A. Prior to planting, the Contractor shall perform a coverage test to confirm that water coverage is complete and adequate, and produces no overspray onto hardscapes. Irrigation pressure readings at the head or emission device may also be taken as part of the coverage test to confirm adequate system hydraulics.
B. The coverage test shall be performed on the entire irrigation system and shall be performed in the presence of the Parks Inspector. The irrigation system must be connected to the City water system through the water meter. Temporary connections are not allowed. On recycled water systems, the coverage test shall take place only after successful completion of the cross-connection test, with the recycled water meter in place.
C. On Park projects containing turf, a comprehensive survey of the Distribution Uniformity (Low Quarter) of each irrigation zone containing turf shall be performed by a third-party, Certified Landscape Irrigation Auditor prior to planting of turf. The irrigation system must be 100% complete, including functionality of the irrigation controller and booster pump, if present. The irrigation auditor shall prepare and submit a report listing each zone's Distribution Uniformity, including actual mapping data of individual catch cans recorded on irrigation plan sheets, and noting any potential deficiencies in the system leading to any inadequate findings. Reported deficiencies in Distribution Uniformity will be evaluated by the Project Manager and may require corrective measures prior to approval of turf planting. Deficiencies caused by improper installation shall be corrected at no additional cost to City.

FOR COUNCIL APPROVAL ONLY

3.20 Irrigation Audit

A. A landscape irrigation audit shall be performed after all landscape and irrigation is installed. The irrigation system must be 100% complete, including functionality of the irrigation controller and booster pump, if present.
B. All landscape irrigation audits shall be conducted by a third party certified landscape irrigation auditor. Landscape audits shall not be conducted by the person who designed the landscape or installed the landscape.
C. The water audit shall conform to the specific water audit requirements of the City of Roseville Environmental Utilities Department, and any supplemental requirements from the City of Roseville Parks, Recreation & Libraries

Department. The contractor shall submit a comprehensive landscape irrigation audit. This shall include, but is not limited to:

1. A completed Irrigation Audit Report-(City of Roseville provided forms only)
2. Complete system evaluation, including site conditions, system and flow data.
3. Scheduling parameters used to set the irrigation controller.
4. An Irrigation schedule for the landscape provided to the owner.

D. A minimum of 25% of all zones shall be audited. The 25% minimum shall be a representative sample of each irrigation method present (i.e. Rotors, bubblers, rotary nozzles, drip, etc.), and is in addition to any turf zones audited during the coverage test.

E. Any deficiencies noted in the audit report such as, but not limited to, run-off, overspray, obstruction of spray patterns, etc., shall be corrected and signed off as such by the original irrigation auditor prior to submission of the report. Do not submit audit reports with uncorrected deficiencies.

3.21 Clean Up

A. Each phase of work shall be immediately cleaned up. Excess equipment, material, etc., shall be legally disposed of and removed from site. All concrete, asphalt and/or decomposed granite paving shall be kept free of soil. Damage to such surfaces shall be immediately repaired to the satisfaction of the City.

PART 4 - GUARANTEE

4.01 General

A. Contractor shall provide a written guarantee covering all materials, equipment and workmanship furnished by him to be free of all defects after installation is accepted, including all defective parts that may have been found.

B. All paved areas shall be swept clean and planted areas shall be weed-free.

C. All irrigation heads shall be properly adjusted. Debris and refuse shall be removed from site prior to inspection.

4.02 Pre-Final (Punch List) Review

A. See Section 01 10 00 1.16 - Summary of Work for notification process.

4.03 Establishment

A. Full automated utilization of the irrigation system shall be included as part of the maintenance of the project. See Section 329000: Planting for additional information.

B. Program and utilize the establishment schedule as submitted with the turn-in items.

FOR COUNCIL APPROVAL ONLY

C. Contractor to run the system in “quantity” mode or “time plus flow” for a minimum of one (1) week.
D. Check the irrigation system weekly to ensure proper operations. Make all necessary adjustments, including watering schedule to ensure proper and healthy plant growth. At no time shall pools of water be present within any part of the project. Conversely, at no point shall dry or under-watered spots be visible upon inspection. Improper irrigation management resulting in flooding or dry conditions to the detriment of plant material may constitute an extension of the establishment period, at no additional cost to the City.

4.04 Final Review

A. The Contractor shall demonstrate to the City, valve by valve, the entire irrigation system to be operable. All heads shall be adjusted/flushed and all drip zones shall be flushed prior to the on-site review. Any item requiring adjustments shall be completed immediately and to the satisfaction of the City.
B. Provide necessary training to City staff in the proper operations and maintenance of the booster pump.
C. The date of final acceptance by the City Council or the recordation of the property transfer shall signify the start date of the warranty period. Final acceptance shall include the project in total and will not segregate any specific item or trade included in the construction of the project.

END OF SECTION

FOR COUNCIL APPROVAL ONLY

SECTION 32 90 00
PLANTING

PART 1 - GENERAL

1.01 General Requirements

A. The requirements set forth in the General Conditions shall be in addition to the standards provided herein.

B. The requirements set forth in the Supplemental Conditions shall be in addition to the standards provided herein.

1.02 Description

A. Furnish all labor, materials and equipment for the complete installation of landscape items, including all trees, shrubs, groundcovers and turf; maintenance for the establishment of new plant materials; and all necessary appurtenances for proper planting, noted or implied, as shown on the Plans and as specified herein.

1.03 Related Work

A. Section 31 20 00: Earthwork

B. Section 32 84 00: Irrigation System

1.04 Quality Assurance

A. Provide an experienced foreman who shall directly supervise the work force during all work to be performed under this contract. The foreman shall be present during the time when work is to be performed.

B. Plant material shall conform to current “American Standards for Nursery Stock” and the State of California Grading Code of Nursery Stock, No. 1 grade. Use only nursery-grown stock.

C. All plant material shall be certified free of plant diseases and insect infestations from the County Agricultural Commissioner as required by law. Each shipment of plant material shall be required to have clearance certificates.

D. Prior to planting, a soils fertility test/analysis shall be conducted by an accepted and qualified testing laboratory. Test results shall contain existing nutrient levels, soil texture, cation exchange capacity, soluble salts, pH levels, infiltration rates and recommended soil amendments/fertilizers to ensure proper growth of the specified plantings.

FOR COUNCIL APPROVAL ONLY

1.05 Submittals

A. Submittals for specified items are not required; however, submittals are required for any proposed substitutions or deviations from the Plans or Specifications. Additionally, submittals are required for the specific items listed below. The Contractor shall submit a materials summary sheet indicating which items will be installed as specified and which items are proposed for substitutions. The Contractor shall submit proof of order within ten (10) working days of the Notice to Proceed, indicating all specified materials have been ordered, noting “as specified” or “substitution proposed”. Submittals are required on the following items:

1. Bark mulch material,
2. Certificates of compliance for turf seed mix, soil amendments, fertilizers and hydroseed mix,
3. Sod-grown turf (if alternate is awarded)
4. Soils test-with soil amendment recommendations.
5. Trees
   a) Submit for approval, plant sources including the names of nurseries proposed as sources of acceptable trees, and a list of the trees they will provide. The plant list shall include the botanical and common name and the size at the time of selection, including basal caliper and height.
   b) Submit all requests for substitutions of plant species or size for approval. Request for substitution shall be accompanied with a list of nurseries contacted in the search for the required plant and a record of other attempts to locate the required material. Requests shall also include sources of plants found that may be of a smaller or larger size, or a different shape or habit than specified, or plants of the same genus and species but different cultivar origin, or which may otherwise not meet the requirements of the specifications, but which may be available for substitution.

FOR COUNCIL APPROVAL ONLY

1.06 Soil Testing

A. Native soil and in-place topsoil shall be tested for amendment determination. Soil Tests shall include soil texture, macro nutrients, micro nutrients, lime, base saturation, pH, sodium, boron, salinity, Cation Exchange Capacity (CEC), and Organic content.

B. Submit soils report for review and approval after completion of grading operations. Soil Testing shall be performed by an agriculture-based lab, with detailed, written recommendations for soil amendments and fertilizers specific to ornamental landscape plants and turf.

1.07 Product Delivery, Handling and Storage

A. All materials shall be delivered bearing nursery label with botanical, common names, including cultivars.

B. Carefully handle plant material to ensure that limbs are not broken during the planting or storage of the material.

C. Store plant material in a covered area on-site, protected from inclement or hot weather on-site. Keep root balls moist by frequent watering (during hot weather) of all accepted stock until such time as planting occurs.

1.08 Inspection of Plant Material

A. Notify the Project Manager a minimum of 48 hours prior to date of delivery. All plant material is subject to inspection at the time of delivery. A sample number of plants will be inspected for the following items:

If the sample....	**then the plant shall be...**
is healthy, shapely and well rooted	accepted.
bears a strong central leader	accepted.
is wilted, wind-blown or sunburned	rejected.
is root-bound, restricted or deformed	rejected.
does not bear a strong central leader or has been severely pruned back	rejected.

B. Stock to be consistent with CALFIRE Nursery/Tree Quality Cue card and Root Management Cue Card. Inspector may require contractor to remove tree or plant stock from plant containers to examine roots.

C. 15 gal tree needs to have at least 1” in basal caliper, a 24” box tree needs to have at least 2” in basal caliper, a 36” box tree needs to have at least 3” in basal caliper. Basal caliper is measured as 6” above the ground.

D. Based on the sample inspection, the Project Manager or Inspector reserves the right to reject any or all of the plant material delivered. All rejected plant material shall be immediately disposed of off-site.

1.09 Record Drawings

A. The Contractor shall keep an accurate record of the as-built conditions of the landscaping. These records shall be updated daily and kept at the construction site. At any time, the Inspector may examine the conditions of the “as-builts” to ensure compliance of the above.

PART 2 - PRODUCTS

2.01 Plants

A. The material to be planted shall conform to that indicated on the plans, unless otherwise accepted. The quantity shown on the Plans is approximate and is

FOR COUNCIL APPROVAL ONLY

furnished for convenience only. Verify all quantities prior to ordering plant material.

2.02 Turf

A. Turf shall be *seed (or sod if alternate is awarded)*.
B. Seed –
   1. 98% pure, weed-free mixture with a minimum of 95% germination. Deliver on-site unopened and in the original containers.
   2. 100% Turf Saver RTF (Rhizomatous Tall Fescue) by Barenbrug or accepted equal.
   3. Turf seed mix shall be Blue tag certified.
C. Sod – Tall fescue blend with named, improved turf-type varieties only. Blend shall contain a minimum 25% Lateral Spread, Rhizomatous, or Self-Repair type tall fescue. Sod shall be non-netted, and contain no more than 10% Bluegrass.
D. Seed / Sod must be submitted and accepted by the Project Manager prior to ordering.

2.03 Soil Amendment

A. As recommended by soils test report.

2.04 Mulch

A. Regular “Walk-on” fir bark as manufactured by Redi-Gro Corporation, Sacramento, CA (916) 381-6063, Mallard Creek, Inc, Rocklin, CA (916) 645-1681, My Bark Company, Inc., Linden, CA (209) 649-4250 or accepted equal.
B. Decorative bark, shredded lumber or saw dust, and construction debris are not permitted. The mulch must be free of needles.

2.05 Topsoil

A. Stockpiled, on-site material.
B. Imported topsoil shall be natural, friable, well-draining, free from admixture of subsoil and foreign objects larger than one inch (1”) in diameter, free from toxins or any other harmful substance which may deter healthy plant growth.
C. Perform a soils test for all imported soil. Soil test shall comply with Section 1.06. Submit soils report for review and approval prior to import activities.

2.06 Pre- and Post- Emergent Herbicide

A. Clean, and non-staining. Consult with a pesticide specialist.

2.07 Tree Stakes and Ties

A. Trees furnished in #15 nursery containers require 2” diameter stakes. Trees less than 8' in height require an 8' stake; trees 8' or greater in height require a 10' stake. Stakes shall be pine or Douglas fir (pressure or non-pressure treated).

FOR COUNCIL APPROVAL ONLY

B. Trees furnished in 24” boxes or larger require 3” diameter by 10’ long stakes. Stakes shall be, pine or Douglas fir (pressure or non-pressure treated).
C. Tree ties and Tree Guying shall be Super Tree Tie, bursting strength 300psi, tensile strength 300lbs , 1” vinyl impregnated Nylon, waterproof, Manufactured by: Arthur Enterprises. Cut to length. Color to be Green.

2.08 Native Seed

A. Where required, native seed shall be applied as follows:
1. Upland areas

Elymus glaucus (Blue Wildrye)	10.0 lbs/acre
Nassella pulchra (Purple Needlegrass)	9.0 lbs/acre
Nassella cernua (Nodding Needlegrass)	6.0 lbs/acre
Melica caljfornica (Californiameljc)	3.0 lbs/acre
Vulpia microstachys (Small Fescue)	3.0 lbs/acre
Poa secunda (Native Pine Bluegrass)	3.0 lbs/acre
Bromus carinaws (California Brome)	2.0 lbs/acre

2. Wildflowers (addition to seed mix(es) above, if specified)

Clarkia amoena (Farewell to Spring)	0.5 lbs/acre
Eschscholzia caljfornica (California Poppy)	2.0 lbs/acre
Lupinus nanus {Sky Lupine)	3.5 lbs/acre
Nemophila menziesii (Baby Blue Eyes)	1.5 lbs/acre
Lasthenia californica (Common Goldfields)	1.5 lbs/acre

B. Areas with sandy, dry soil shall receive: Zorro Annual Fescue 6 lbs/acre, Rose Clover 9 lbs/acre
C. A fertilizer consisting of 15-15-15 shall be applied at a rate of one half pound per 1,000 square feet. Fertilizer shall be Natural-based, slow release, and balanced in N, P, & K.
D. Seed for creek banks shall conform to the latest requirements of the California Department of Fish and Game.

FOR COUNCIL APPROVAL ONLY

PART 3 - EXECUTION

3.01 Site Preparations

A. Prior to start of landscaping work, review the site conditions to verify final grades have been established, plant/turf beds are weed free, and the irrigation system is operational as shown on the Plans and as indicated in the Specifications.
B. For landscaping within all street right-of-ways, conduct a soils analysis test of the existing soils and remove all lime-treated soils, aggregate base or other

non-organic material to a minimum depth of two feet before planting or irrigation installation. Import topsoil to bring the finish grade to specified grades. Submit the soils analysis test results of the imported material prior to import.

C. Notify the Inspector immediately of any existing conditions which are unacceptable for the commencement of landscaping work.

3.02 Coordination of Work

A. Coordinate all work with other trades.

3.03 Preparation of Planting and Turf Areas

A. Upon completion of grading and underground activity, Contractor shall obtain a soils test as outlined in 1.06.
B. Place stockpiled topsoil in all areas to receive planting or turf to a minimum depth of twelve inches (12”).
C. Rip topsoil surface in two directions to a minimum depth of twelve inches (12”).
D. Spread soil amendments at the rates indicated in the soils report.
E. Rototill amendments to recommended depths. Till amendments to a depth of 6” or as recommended by soils report.
F. Remove all rock and debris which are greater than ½ inch in areas to receive turf and one inch (1”) in areas to be planted.
G. All planted and turf areas to be smooth and uniform in grade as shown on the Plans.
H. Planting areas to be sloped to drain as shown on the Plans.

FOR COUNCIL APPROVAL ONLY

3.04 Storage of Plants and Trees

A. Protect materials from deterioration during delivery and storage. Adequately protect plants from drying out, exposure of roots to sun, wind or extremes of heat and cold temperatures. If planting is delayed more than 24 hours after delivery, set plants in a location protected from sun and wind. Provide adequate water to the root ball package during the shipping and storage period, including weekends and Holidays.
B. Soil moisture shall be maintained above wilting point and below field capacity for the root ball substrate or soil.
C. All plant materials must be available for observation prior to planting. Any plants determined to damaged or distressed due to improper watering may be rejected by inspector and shall be replaced at no cost to City.

3.05 Plant Installation

A. Tree and Shrub Planting
    1. Remove only those plants which will be planted the same day. Place such plants in the proposed locations for review and accepted by the City prior to

actual planting. Notify the Inspector a minimum of 48 hours prior to day of planting.

2. Dig planting pits as shown on the Plans and as shown in the Parks Construction Standards. Scarify the sides and bottom of pit to prevent glazing. Fill pit completely with water and allow the water to completely drain from the pit prior to actual planting.
3. Relocate any plantings taller than 6” in height that fall in front of any irrigation head in order to ensure proper coverage of the irrigation system.
4. For pits that retain water, completely penetrate the hardpan layer at the bottom of the pit and backfill with topsoil. Fill pit with water to test and ensure proper drainage.
5. Prior to tree planting a central leader needs to be established by structural pruning, as necessary. Codominant leaders need to be removed or suppressed by structural pruning. Refer to the CALFIRE "Tree Training", "Tree Planting", and "Tree Quality" cue cards and "Tree and Plant Root Management Standard and Quality Expectations" contained in Section 5 of these Standards.
6. Plants shall be removed from their containers only at the time of placement within the plant pit. Perform root pruning on all four sides of the root ball by shaving and cutting away the root ball periphery to reduce the amount of circling roots. Starting from the top and then cutting/slicing down to the bottom of the root ball. On a 15 gal container at least 1-1.5 inches of the root ball periphery needs to be removed by slicing or shaving. On a 24” and 36”box tree at least 2 inches of the root ball periphery needs to be removed by slicing or shaving. A sharp hand pruning saw needs to be used for the slicing or shaving of the root ball. Refer to the CALFIRE "Root Management" cue card contained in Section 5 of these Standards. This process will remove many girdling and circling roots deflected by the container wall and allows for root penetration within the planting basin. Spread all roots to the side to allow proper root development. Add native backfill and amendments as shown in the Parks Construction Standards and as recommended by the soils testing laboratory.
7. Plant tree at least three inches (2”) above grade on mount to prevent bowl effect. The tree’s beginning root flare must be located at top of grade with installed sod.
8. Carefully place plant into the plant pit without damaging the root ball. Water the backfill until saturated. For trees, water in by hand after planting using at least ten (10) gallons of water, minimum.
9. Where mowing will occur, provide an eight-foot (8’) minimum horizontal clearance between trees and other site improvements, including shrubs.

FOR COUNCIL APPROVAL ONLY

10. Tree ties should be installed via a figure eight loop and each tie shall be secured with a nail on the tree stake. Install two (2) Super Tree Ties at 2/3 of tree height and two (2) Super Tree Ties at ½ of tree height.
11. Tree stakes should be inserted into the ground to a minimum depth of 18".

B. Groundcover Planting
   1. Place groundcover plants in neat, straight, and parallel rows, triangularly spaced as shown on the Plans and as indicated herein.
   2. Start the first row of planting at a distance equal to the on-center spacing required per plan, minimum, from the edge of the adjacent hardscape, mow band or header board.
   3. Groundcover shall be installed to the outside edge of the water basins of trees or shrubs.

3.06 Seeding- Turf and Native

(Hydroseeding for turf or natural areas)

A. Lightly scarify areas to be hydroseeded.
B. Tank, hose and associated apparatus must be thoroughly clean and free of debris or other material prior to placement/spraying of seed.
C. Hydroseed turf mix shall contain the following:

Material	**Application Rate**
Turf Seed	Per Manufacturer's Recommendations
Wood Cellulose Fiber Mulch	60 lbs. per 1,000 SF
Binder	Per Manufacturer's Recommendation
Fungicide (turf only)	1/3 lb. per 1,000 SF
Fertilizer	15-15-15 All Purpose Fertilizer. Rate per Manufacuter's Recommendation
Soil Conditioner	Per Soil Conditioner soils lab recommendation and as approved by Parks, Recreation & Libraries Department

D. Blend mix in a hydraulic mixer until all material is consistently blended.
E. Apply mix at a rate of 125 pounds per 1,000 square feet unless otherwise recommended by the manufacturer.
F. Spray mixture consistently over the area to be hydroseeded. Protect adjacent areas such as paving, walls, play areas and other from overspray.
G. At the end of each day of spraying operations, clean up all areas where overspray has occurred.
H. Once seed is placed, it should not be allowed to dry out.

3.07 Sod- Turf

A. Remove all "humps" and depressions prior to sodding.
B. Keep all sod rolls shaded and moist prior to installation.

FOR COUNCIL APPROVAL ONLY

C. Do not store sod rolls more than one (1) day. Sod shall be laid upon delivery.
D. Unroll sod one at a time for immediate installation.
E. Provide tight seam between rolls of sod (less than 1/8” gaps).
F. Stagger rows so that the ends of sod rolls are stepped.
G. For turf areas where sod is partially provided, add topsoil at all transition edges to same as finish grade.
H. Sod planted during high Summer temperatures may require fungicide application(s) as a preventative measure. A Pest Control Advisor should be consulted for recommendations. Contractor is responsible for the continued health and establishment of sod and any costs of preventative treaments.

3.08 Mulch

A. Prior to placing mulch, apply post-emergent herbicide to any weeds present, per label directions. After achieving die-off, weeds shall be mechanically cut down or hand-pulled to allow for mulch installation.
B. Prior to placing mulch, apply pre-emergent herbicide in all planting areas, per label directions.
C. Apply three inches (3”) of mulch in all landscape planter areas.
D. Keep mulch a minimum of three inches (3”) away from the trunks of all woody shrubs and four inches (6”) away from all trees. Taper mulch profile away from this point to prevent subsequent collection of mulch against trunks.

3.09 Watering

A. Upon completion of each planting or turf area, irrigate appropriately to ensure proper health and growth.
B. Continually adjust the irrigation for plant needs regardless of air temperature.

3.10 Clean-up

A. Upon completion of planting operations, collect and remove from site all empty plant containers, debris, rubbish and other trash.
B. Sweep clean and wash all hardscape areas.
C. Clean up shall occur, at minimum of once a week, at the end of the work week.
D. Maintain the entire site in a clean condition to the satisfaction of the City.

3.11 Pre-Final (Punch List) Review

A. See Section 011000 1.16 of the Summary of Work for notification process.
B. The following conditions must be met in order for planting to be considered towards substantial completion, as required to enter into the establishment period described in Section 011000, 1.16:
   1. For seeded turf:

FOR COUNCIL APPROVAL ONLY

a. Upon completion of the second mowing of completely germinated turf. Second mowing is defined as full coverage of turfed area 90% weed free.
b. Root depth – Turf grass roots shall be healthy, creamy-white in color and be 4” or greater in length/depth as measured from the soil surface to root tip. This shall be consistent throughout turfed area.
c. Turf shall be of uniform green color with no visible signs of stress due to soil fertility, moisture, disease or pests.

2. For sodded turf:
   a. Accepted installation of the sod.
   b. Turf shall be of uniform green color with no visible signs of stress due to soil fertility, moisture, disease or pests.
3. For trees and shrubs:
   a. Trees and shrubs shall be properly installed, and with no visible signs of stress due to soil fertility, moisture, disease or pests.

3.12 Establishment Period

A. Active maintenance is required throughout the entire establishment period:
   1. Maintain turf to a height of two and one half inches (2-1/2”) for cool season turf varieties and one and one half inches (1-1/2”) for warm season turf varieties. Maintained height shall be measured from the surface of finish grade to the top of the leaf blade throughout the establishment period, and mowed as frequently as required to maintain said height. At no time shall the leaf blade be mowed or cut more than 1/3 of the length of the blade. Root mass/depth must remain consistent as measured at the start of establishment or greater.
   2. Edge all turf areas along hardscape edges.
   3. Re-seed all bare areas within the turf as soon as evident.
   4. Immediately replace all dead plants.
   5. As necessary, raise all trees and shrubs which have sunk within the plant pit beyond the levels indicated in the Standard details.
   6. Keep all areas free of weeds, pests and disease.
   7. For trees located in turf areas, maintain a circle free of turf at a distance described in the Standard details
B. Prior to the start of the final thirty (30) days of establishment:
   1. All plant replacements shall be completed.
   2. All plantings and turf shall be thriving and in a healthy condition.
   3. The lack of active maintenance prior to the final thirty (30) days may constitute a delay in the start of the final thirty (30) days of the establishment period.

FOR COUNCIL APPROVAL ONLY

3.13 Final Review

A. The Inspector shall review the site for completion of items noted, but not limited to, “B” below. All corrective action is required to enter into the final thirty (30) days of establishment.
B. The site shall be prepared for review, by ensuring that:
    1. All spray heads have been properly adjusted,
    2. Dead plants have been replaced,
    3. Planting areas have been weeded,
    4. Turf areas have full germination, are consistent in green color and are weed-free,
    5. Walkways and paved areas have been swept and washed, and
    6. Turf roots meet standards outlined in 3.10
C. Failure to complete any one or all of the above items may constitute non-performance of the final review and will require re-scheduling. In this case, the cost of the extended establishment period shall be at no additional cost to the City.

PART 4 - GUARANTEE

4.01 General

A. Contractor shall provide a written guarantee covering all plant materials (trees & shrubs) furnished by them to be free of all defects or disease and that all plants are in a healthy and thriving condition at the completion of the contract. Deciduous plant material shall be warranted beyond the time of contract completion until such time as growth becomes evident.
B. All plants, except those provided by the City, shall be warrantied for a period of one (1) year, commencing on the date of final acceptance. The warranty shall be as outlined in Section 011000: Summary of Work, paragraph 1.19.

FOR COUNCIL APPROVAL ONLY

END OF SECTION

FOR COUNCIL APPROVAL ONLY

SECTION 33 00 00
UTILITIES

PART 1 - GENERAL

1.01 General Requirements

A. The requirements set forth in the General Conditions shall be in addition to the standards provided herein.
B. The requirements set forth in the Supplemental Conditions shall be in addition to the standards provided herein.
C. The standards set forth in the City of Roseville Design and Construction Standards, latest edition, for storm drainage throughout the project and for sanitary sewer installations within the public rights-of-ways, easements, or as shown on the improvement plans shall be in addition to the standards provided herein.
D. The standards set forth in the latest edition of the California Building Code (CBC) for sanitary sewer installation within the project site, outside of the public right-of-way or easement shall be in addition to the standards provided herein.

1.02 Description

A. Furnish all labor, materials and equipment for the complete installation of the storm drain system, and necessary appurtenances as shown on the Plans and as specified herein.
B. Submit a materials listing for review and approval prior to commencement of specified work.

1.03 Related Work

A. Section 31 10 00: Clearing and Grubbing
B. Section 31 20 00: Earthwork

1.04 Safety Requirements

A. Furnish, install and maintain required sheeting, shoring, bracing, and other methods to ensure complete and safe work environment for all workers. Upon completion of work, remove all bracing, shoring, etc. in its entirety, unless otherwise directed by the Inspector.
B. Prior to excavation or trenching, the Contractor shall contact USA Alert (800)
C. 227-2600 to locate all known utilities a minimum of 48 hours prior to start of work. During the course of construction, the Contractor shall take every precaution to maintain and protect utilities noted to remain. Said utilities shall remain operational at all times, unless otherwise noted on the plans.

FOR COUNCIL APPROVAL ONLY

D. The existing utilities are shown on the Plans based on the information available at the time of contract document development. The City shall not assume responsibility for any inaccuracies or incompleteness of the Plans based on such information. The Contractor shall immediately notify, upon damage of any pipeline or facility, the Owner and/or its agents and take every action necessary to repair or replace damaged facilities to the satisfaction of the Inspector, and at no additional cost to the City.
E. Trenches, excavations and repair of pavement shall be consistent with Section 31 20 00: Earthwork.

1.05 Coordination

A. The piping system as shown on the Plans is diagrammatic. The Contractor shall make reasonable adjustments to the layout to avoid conflicts, based on actual field conditions. Said changes shall not interfere with the design intent of the system.

1.06 Tolerance

A. The allowable tolerance for the installation of pipe is 0.05 feet within grades or spot elevations indicated on the Plans.

1.07 Product Storage

A. Take every precaution to protect the materials and pipes from damage during the delivery, storage and installation of the pipe system. Store in a cool, contained area, protected from direct sunlight and per manufacturer's recommendations. Pipe shall be supported on firm level ground at the site.

1.08 Record Drawings

A. The Contractor shall keep an accurate record of the as-built conditions of the storm drain and sanitary sewer system. These records shall be updated daily and kept at the construction site. At any time, the Inspector may examine the conditions of the "as-builts" to ensure compliance of the above.

FOR COUNCIL APPROVAL ONLY

PART 2 - PRODUCTS

2.01 General

A. All products shall conform to City of Roseville Design and Construction Standards, latest edition, except as noted below.

2.02 Drain Pipe

A. Solid drainpipe shall be PVC SDR 35 and shall conform to ASTM D1784, or accepted equal. Gasketed connections shall conform to ASTM F477.

B. Perforated drainpipe shall be smooth walled PVC, open per Caltrans Section 68-1.02K, or accepted equal.

2.03 Drain Rock

A. Drain rock shall be Class 2 washed, ¾" diameter.

2.04 Filter Fabric

A. Filter fabric shall be Mirafi 140N, or accepted equal.

2.05 Drains

A. Drain Inlets shall be pre-cast and a minimum size of twenty-four inches (24") square or round by Jensen Precast, or accepted equal.
   1. Grate shall be heavy duty, cast iron, walk-on, and bolt down.
   2. Box extensions shall be Jensen Precast, or accepted equal.
   3. The base shall be six inches (6") thick.
   4. Walls shall be six inches (6") thick.
   5. A "No Dumping" Metal Storm Drain Marker shall be affixed to the concrete color of each drain inlet (See Detail DR-20)
   6. Contractor may install cast-in-place drain inlets in lieu of pre-cast drain inlets. Submit shop drawings and concrete mix design for review and approval.

B. Channel Drains for baseball/softball backstop areas shall be Polycast 600 series pre-sloped trench drains with galvanized steel slotted grates or accepted equal.

C. Sanitary sewer clean outs shall be as specified in the City of Roseville, Design and Construction Standards, latest edition.

2.06 Manholes

A. Manholes shall have tongue and groove joints, be forty-eight inches (48") minimum in diameter, meeting ASTM C-478.

B. Covers shall be cast iron.

C. All components shall conform to the City of Roseville Design and Construction Standards, latest edition.

2.07 Tracer Wire

A. Insulated solid copper wire, minimum #12 gauge. Color per City of Roseville Design and Construction Standards.

2.08 Potable Water Warning Tape

A. On sites with both Recycled water and potable water lines. Blue plastic tape, 3 inches wide, with the words "CAUTION: POTABLE WATERLINE" imprinted in minimum 1-inch high, black letters per City of Roseville Design and Construction Standards. Imprinting shall be continuous and permanent.

FOR COUNCIL APPROVAL ONLY

PART 3 - EXECUTION

3.01 General

A. All pipes shall slope uniformly from given elevations shown on the Plans.
B. All pipes shall be accurately laid true to line and grade, utilizing accepted construction methods.
C. Damaged or cracked pipe and fittings shall not be installed and shall be removed from site.
D. Install all pipe in locations shown on the Plans, except where existing conditions necessitate minor changes.
E. All pipe and fittings shall be kept clean and closed throughout the course of construction.
F. Connections to existing sanitary sewer stubs shall be “TV-ed” and air tested prior to the start of construction per the City of Roseville Design and Construction Standards, latest edition.

3.02 Installation

A. Installation of the specified pipe lines shall conform to the City of Roseville Design and Construction Standards, latest edition.
B. Notify the Inspector a minimum of 48 hours prior to covering of work to ensure timely inspections.
C. Cutting of AC or concrete paving shall be clean, vertical and straight, using a saw, or other tool specific to this application. Replace paving to existing or better condition prior to work.
D. Trench and backfill shall be per City of Roseville Design and Construction Standards, latest edition.
E. Catch basins and drain inlets shall be installed with a concrete collar with “No Dumping” message and fish symbol depressed into the concrete or bolted in place, consistent with Drawing DR-20 the City of Roseville Design and Construction Standards, latest edition.
F. Drain inlets installed in mulched planter areas shall have a 12-inch wide collar of 2- to 6-inch river cobble placed over filter fabric.
G. Channel drains shall be set per manufacturer’s instructions. Place slotted grates along the entire length of the backstop, including wing fencing, wherever concrete is placed adjacent to the backstop system. Provide a below grade piped connection at all gate openings into the infield area. Do not install grated drain sections at these entry/exit points.
H. Manholes shall be per City of Roseville Design and Construction Standards, latest edition. Install grate flush with finish grade.

FOR COUNCIL APPROVAL ONLY

I. Sanitary Sewer Clean-outs shall be installed with 3M ball markers and shall be located within planted or turf areas, whenever possible. Place clean-outs at 100' intervals throughout the project. Clean-outs shall not be located within play areas. Install per City of Roseville Design and Construction Standards, latest edition.
J. Upon completion, thoroughly flush storm drain system in the presence of the Parks Inspector.

3.03 Tracer Wire

A. Install tracer wire on top of the potable water lines
B. Tracer wire shall be continuous with no splices.

3.04 Potable Water Warning Tape

A. To be used on all potable water piping installed within the same project limits as on-site recycled water piping.
B. Install plastic warning tape in pipe backfill, six inches above pipe, for the entire length of the pipe.

3.05 Cleaning

A. Keep site clean at all times. Remove from the site all debris and rubbish and legally dispose.

END OF SECTION

FOR COUNCIL APPROVAL ONLY

DRAWINGS

Project: JM-51 Park Project

Project drawings are issued as a separate plan set,
titled "JM-51 Park"
dated 2/03/2026
as prepared by Fuhrman - Leamy Land Group

FOR COUNCIL APPROVAL ONLY

DRAW

TEXT OF AB 626

Assembly Bill No. 626

CHAPTER 810

An act to add and repeal Section 9204 of the Public Contract Code, relating to public contracts.

[Approved by Governor September 29, 2016. Filed with Secretary of State September 29, 2016.]

LEGISLATIVE COUNSEL'S DIGEST

AB 626, Chiu. Public contracts: claim resolution.

Existing law prescribes various requirements regarding the formation, content, and enforcement of state and local public contracts. Existing law applicable to state public contracts generally requires that the resolution of claims related to those contracts be subject to arbitration. Existing law applicable to local agency contracts prescribes a process for the resolution of claims related to those contracts of $375,000 or less.

This bill would establish, for contracts entered into on or after January 1, 2017, a claim resolution process applicable to any claim by a contractor in connection with a public works project. The bill would define a claim as a separate demand by the contractor for one or more of the following: a time extension for relief from damages or penalties for delay, payment of money or damages arising from work done pursuant to the contract for a public work, or payment of an amount disputed by the public entity, as specified.

This bill would require a public entity, defined to exclude certain state entities, upon receipt of a claim sent by registered or certified mail, to review it and, within 45 days, provide a written statement identifying the disputed and undisputed portions of the claim. The bill would authorize the 45-day period to be extended by mutual agreement. The bill would require any payment due on an undisputed portion of the claim to be processed within 60 days, as specified. The bill would require that the claim be deemed rejected in its entirety if the public entity fails to issue the written statement.

This bill would authorize, if the claimant disputes the public entity's written response or if the public entity fails to respond to a claim within the time prescribed, the claimant to demand to meet and confer for settlement of the issues in dispute. The bill would require any disputed portion of the claim that remains in dispute after the meet and confer conference to be subject to nonbinding mediation, as specified. The bill would provide that unpaid claim amounts accrue interest at 7% per annum. The bill would prescribe a procedure by which a subcontractor or lower tier contractor may make a claim through the contractor.

This bill would require the text of these provisions, or a summary, to be set forth in the plans or specifications for any public work which may give rise to a claim. The bill would specify that a waiver of these rights is void and contrary to public policy, except as specified. The bill would also specify that it does not impose liability on a public entity that makes loans or grants available through a competitive application process, for the failure of an awardee to meet its contractual obligations.

FOR COUNCIL APPROVAL ONLY

By increasing the duties of local agencies and officials, this bill would impose a state-mandated local program.

This bill would, on January 1, 2020, repeal the provision establishing the claim resolution process.

This bill would specify that these provisions constitute a matter of statewide concern.

The California Constitution requires the state to reimburse local agencies and school districts for certain costs mandated by the state. Statutory provisions establish procedures for making that reimbursement.

This bill would provide that, if the Commission on State Mandates determines that the bill contains costs mandated by the state, reimbursement for those costs shall be made pursuant to these statutory provisions.

The people of the State of California do enact as follows:

SECTION 1. Section 9204 is added to the Public Contract Code, to read:

9204. (a) The Legislature finds and declares that it is in the best interests of the state and its citizens to ensure that all construction business performed on a public works project in the state that is complete and not in dispute is paid in full and in a timely manner.

(b) Notwithstanding any other law, including, but not limited to, Article 7.1 (commencing with Section 10240) of Chapter 1 of Part 2, Chapter 10 (commencing with Section 19100) of Part 2, and Article 1.5 (commencing with Section 20104) of Chapter 1 of Part 3, this section shall apply to any claim by a contractor in connection with a public works project.

(c) For purposes of this section:

(1) "Claim" means a separate demand by a contractor sent by registered mail or certified mail with return receipt requested, for one or more of the following:

(A) A time extension, including, without limitation, for relief from damages or penalties for delay assessed by a public entity under a contract for a public works project.

(B) Payment by the public entity of money or damages arising from work done by, or on behalf of, the contractor pursuant to the contract for a public works project and payment for which is not otherwise expressly provided or to which the claimant is not otherwise entitled.

(C) Payment of an amount that is disputed by the public entity.

(2) "Contractor" means any type of contractor within the meaning of Chapter 9 (commencing with Section 7000) of Division 3 of the Business and Professions Code who has entered into a direct contract with a public entity for a public works project.

(3) (A) "Public entity" means, without limitation, except as provided in subparagraph (B), a state agency, department, office, division, bureau, board, or commission, the California State University, the University of California, a city, including a charter city, county, including a charter county, city and county, including a charter city and county, district, special district, public authority, political subdivision, public corporation, or nonprofit transit corporation wholly owned by a public agency and formed to carry out the purposes of the public agency.

(B) "Public entity" shall not include the following:

(i) The Department of Water Resources as to any project under the jurisdiction of that department.

(ii) The Department of Transportation as to any project under the jurisdiction of that department.

FOR COUNCIL APPROVAL ONLY

(iii) The Department of Parks and Recreation as to any project under the jurisdiction of that department.

(iv) The Department of Corrections and Rehabilitation with respect to any project under its jurisdiction pursuant to Chapter 11 (commencing with Section 7000) of Title 7 of Part 3 of the Penal Code.

(v) The Military Department as to any project under the jurisdiction of that department.

(vi) The Department of General Services as to all other projects.

(vii) The High-Speed Rail Authority.

(4) "Public works project" means the erection, construction, alteration, repair, or improvement of any public structure, building, road, or other public improvement of any kind.

(5) "Subcontractor" means any type of contractor within the meaning of Chapter 9 (commencing with Section 7000) of Division 3 of the Business and Professions Code who either is in direct contract with a contractor or is a lower tier subcontractor.

(d) (1) (A) Upon receipt of a claim pursuant to this section, the public entity to which the claim applies shall conduct a reasonable review of the claim and, within a period not to exceed 45 days, shall provide the claimant a written statement identifying what portion of the claim is disputed and what portion is undisputed. Upon receipt of a claim, a public entity and a contractor may, by mutual agreement, extend the time period provided in this subdivision.

(B) The claimant shall furnish reasonable documentation to support the claim.

(C) If the public entity needs approval from its governing body to provide the claimant a written statement identifying the disputed portion and the undisputed portion of the claim, and the governing body does not meet within the 45 days or within the mutually agreed to extension of time following receipt of a claim sent by registered mail or certified mail, return receipt requested, the public entity shall have up to three days following the next duly publicly noticed meeting of the governing body after the 45-day period, or extension, expires to provide the claimant a written statement identifying the disputed portion and the undisputed portion.

(D) Any payment due on an undisputed portion of the claim shall be processed and made within 60 days after the public entity issues its written statement. If the public entity fails to issue a written statement, paragraph (3) shall apply.

(2) (A) If the claimant disputes the public entity's written response, or if the public entity fails to respond to a claim issued pursuant to this section within the time prescribed, the claimant may demand in writing an informal conference to meet and confer for settlement of the issues in dispute. Upon receipt of a demand in writing sent by registered mail or certified mail, return receipt requested, the public entity shall schedule a meet and confer conference within 30 days for settlement of the dispute.

(B) Within 10 business days following the conclusion of the meet and confer conference, if the claim or any portion of the claim remains in dispute, the public entity shall provide the claimant a written statement identifying the portion of the claim that remains in dispute and the portion that is undisputed. Any payment due on an undisputed portion of the claim shall be processed and made within 60 days after the public entity issues its written statement. Any disputed portion of the claim, as identified by the contractor in writing, shall be submitted to nonbinding mediation, with the public entity and the claimant sharing the associated costs equally. The public entity and claimant shall mutually agree to a mediator within 10 business days after the disputed portion of the claim has been identified in writing. If the parties cannot agree upon a mediator, each party shall select a mediator and those mediators shall select a qualified neutral third party to mediate with regard to the disputed portion of the claim. Each

FOR COUNCIL APPROVAL ONLY

party shall bear the fees and costs charged by its respective mediator in connection with the selection of the neutral mediator. If mediation is unsuccessful, the parts of the claim remaining in dispute shall be subject to applicable procedures outside this section.

(C) For purposes of this section, mediation includes any nonbinding process, including, but not limited to, neutral evaluation or a dispute review board, in which an independent third party or board assists the parties in dispute resolution through negotiation or by issuance of an evaluation. Any mediation utilized shall conform to the timeframes in this section.

(D) Unless otherwise agreed to by the public entity and the contractor in writing, the mediation conducted pursuant to this section shall excuse any further obligation under Section 20104.4 to mediate after litigation has been commenced.

(E) This section does not preclude a public entity from requiring arbitration of disputes under private arbitration or the Public Works Contract Arbitration Program, if mediation under this section does not resolve the parties' dispute.

(3) Failure by the public entity to respond to a claim from a contractor within the time periods described in this subdivision or to otherwise meet the time requirements of this section shall result in the claim being deemed rejected in its entirety. A claim that is denied by reason of the public entity's failure to have responded to a claim, or its failure to otherwise meet the time requirements of this section, shall not constitute an adverse finding with regard to the merits of the claim or the responsibility or qualifications of the claimant.

(4) Amounts not paid in a timely manner as required by this section shall bear interest at 7 percent per annum.

(5) If a subcontractor or a lower tier subcontractor lacks legal standing to assert a claim against a public entity because privity of contract does not exist, the contractor may present to the public entity a claim on behalf of a subcontractor or lower tier subcontractor. A subcontractor may request in writing, either on his or her own behalf or on behalf of a lower tier subcontractor, that the contractor present a claim for work which was performed by the subcontractor or by a lower tier subcontractor on behalf of the subcontractor. The subcontractor requesting that the claim be presented to the public entity shall furnish reasonable documentation to support the claim. Within 45 days of receipt of this written request, the contractor shall notify the subcontractor in writing as to whether the contractor presented the claim to the public entity and, if the original contractor did not present the claim, provide the subcontractor with a statement of the reasons for not having done so.

(e) The text of this section or a summary of it shall be set forth in the plans or specifications for any public works project that may give rise to a claim under this section.

(f) A waiver of the rights granted by this section is void and contrary to public policy, provided, however, that (1) upon receipt of a claim, the parties may mutually agree to waive, in writing, mediation and proceed directly to the commencement of a civil action or binding arbitration, as applicable; and (2) a public entity may prescribe reasonable change order, claim, and dispute resolution procedures and requirements in addition to the provisions of this section, so long as the contractual provisions do not conflict with or otherwise impair the timeframes and procedures set forth in this section.

(g) This section applies to contracts entered into on or after January 1, 2017.

(h) Nothing in this section shall impose liability upon a public entity that makes loans or grants available through a competitive application process, for the failure of an awardee to meet its contractual obligations.

(i) This section shall remain in effect only until January 1, 2020, and as of that date is

FOR COUNCIL APPROVAL ONLY

repealed, unless a later enacted statute, that is enacted before January 1, 2020, deletes or extends that date.

SECTION 2.
The Legislature finds and declares that it is of statewide concern to require a charter city, charter county, or charter city and county to follow a prescribed claims resolution process to ensure there are uniform and equitable procurement practices.

SECTION 3.
If the Commission on State Mandates determines that this act contains costs mandated by the state, reimbursement to local agencies and school districts for those costs shall be made pursuant to Part 7 (commencing with Section 17500) of Division 4 of Title 2 of the Government Code.

FOR COUNCIL APPROVAL ONLY

APPENDIX A - SOIL REPORT

FOR COUNCIL APPROVAL ONLY

Sunland Analytical

11419 Sunrise Gold Circle, #10
Rancho Cordova, CA 95742
(916) 852-8557

Date Reported 01/30/2026
Date Submitted 01/27/2026

To: Joel DeJong
City Of Roseville
311 Vernon St.
Roseville,CA 95678

From: Gene Oliphant, Ph.D. \
General Manager \

The reported analysis was requested for the following:
Location : PARK SITE JM-51 Site ID : JM-51.
Thank you for your business.

* For future reference to this analysis please use SUN # 97375-198896.

SOIL ANALYSIS

Saturation Percent (SP)	50		Soil Texture Loam
pH	7.00		
E.C.	0.40	mmho/cm	
Tot.Dissolved Salts	256	ppm	
Infiltration Rate (0% Slope)	0.54	in/hr	
% Organic Matter	3.3		
C.E.C.	17.8	meq/100g	
Sodium Absorption Ratio (SAR)	1.4		
Exchangable Sodium Percent (ESP)	0.7		
Gypsum Req. (CaSO4*2H2O)	None Required		
est. Nitrogen Release	1.3	#/1000 sq.ft.	

			Very Low	Low	Adequate	Excessive
Nitrate	5.35	ppm	**			
Phosphorus	19.80	ppm	**********			
Potassium	102.80	ppm	**********			
Sulfur	5.90	ppm	********			
Chloride	25.59	ppm	**********			
Carbonates	80.14	ppm	**********			
Sodium	30.51	ppm				
Calcium	2375.12	ppm	**********			
Magnesium	674.76	ppm	**********			
Boron	0.01	ppm				
Copper	0.34	ppm	***			
Iron	9.84	ppm	**********			
Manganese	6.06	ppm	**********			
Zinc	0.12	ppm	*****			

FOR COUNCIL APPROVAL ONLY

Sunland Analytical
11419 Sunrise Gold Circle, #10
Rancho Cordova, CA 95742
(916) 852-8557

DATE 01/30/2026
SUN NUMBER 198896

Information requested by:
Joel DeJong
City Of Roseville

Information for:
PARK SITE JM-51
Sample ID: JM-51

SOIL RECOMMENDATIONS FOR LANDSCAPE GARDENING

SOIL pH (Acidity and Alkalinity)

The pH of this sample indicates the soil is in a range for normal growth of most plants. No modification is required.

DISSOLVED SALTS (Indicated by E.C. & TDS)

These conditions are in the normal range for plant growth.

SOIL TEXTURE AND RATE OF WATER INFILTRATION

The infiltration rate for all soil textures decreases with increasing ground slope. At 0 to 4%, 5 to 8%, 9 to 12%, 13 to 16% and above 16% the infiltration rate of this sample decreases from 0.54 to 0.43, 0.32, 0.22, 0.14, respectively. Infiltration rate also decreases with percent of ground cover and by compaction.

WATER PENETRATION OF SOIL DUE TO CHEMICAL CHARACTERISTICS

When exchangable Sodium increases in the soil, water penetration decreases. Based on SAR and ESP values this sample has no penetration problem due to soil Sodium. No Gypsum required.

ORGANIC MATTER

Organic matter provides a slow nitrogen release and aids water retention. This sample has a moderate Organic Matter content.
To maintain moisture and provide sustained nitrogen release a level of 10% organic matter is recommended. This can be accomplished by adding 3 yards per 1000 sq.ft. of ground fir bark that is approximately 75% organic matter (i.e. typically found in ground fir bark which also has naturally low salt and boron concentrations). In California, the MWELO ordenance requires a fixed application of four yards of COMPOST if the soil organic matter is less than 6%. However, of significant concern when applying COMPOST is the potential for the compost to have high salt, high boron content, high C to N ratio and having a higly variable pH (very high to very low). All of these COMPOST characteristics can have very negative affect on plant growth. Take care by having the compost analyzed or by seeing a recent analysis of the compost to be used.

FOR COUNCIL APPROVAL ONLY

Sunland Analytical
11419 Sunrise Gold Circle, #10
Rancho Cordova, CA 95742
(916) 852-8557

DATE 01/30/2026
SUN NUMBER 198896

Information requested by:
Joel DeJong
City Of Roseville

Information for:
PARK SITE JM-51
Sample ID: JM-51

SOIL RECOMMENDATIONS FOR LANDSCAPE GARDENING

SOIL BORON

Boron concentration is below adequate level. Apply 0.5 (1/2) oz./1000 sq.ft. of boric acid. Dissolve in 2 gallons of water and apply by spraying. Apply carefully because excess boron is toxic to plants !!

SOIL MICRONUTRIENTS

Micronutrients, Copper, Iron, Manganese and Zinc, in soil are present in small amounts. However, they play a necessary role in plant metabolism. Without appropriate amounts plants will not thrive. Apply the following per 1000/ sq.ft. Do not mix micronutrients during application (use a separate application for each element indicated). Apply 10 # of ironite or similar product and water well.

Because copper, manganese and zinc are in very small amounts, dissolve (each) in 2 gallons of water and use a sprayer to obtain an even application. Apply 0.2 # Copper Sulfate, 0.5 # Zinc Sulfate and water.

SOIL MACRONUTRIENTS : NITROGEN-PHOSPHORUS-POTASSIUM (N-P-K)

GENERAL N-P-K RECOMMENDATION

Use ONE of these NPK preparations for the first fertilizer application.

Standard NPK Fertilizer Preparations	6-24-24	5-20-10	16-16-16	0-10-10	28-3-4	21-0-0	Customer Choice None
#/1000 sq.ft.	17	20	7	N/A	N/A	N/A	**

GRASS OR SOD PREPARATION

Till in organic matter, N,P,K and micro nutrients in addition to any lime gypsum or sulfur as directed above. Smooth soil surface and follow seed or sod producers direction for moisture and product application.

TREES AND SHRUBS

Excavate holes for planting shrubs and trees to at least twice the volume of the container. Prepare backfill for tree and shrub planting holes by mixing three parts of native soil (or imported top soil) with one part organic amendment (preferably nitrogen and iron fortified) and 2.5 pounds of 6-24-24 per yard of mix. For extended fertilization, place slow release fertilizer tablets in each hole per manufacturer's instructions. If 6-24-24 was not directly added to backfill mix, during backfill apply uniformly 1/2 oz of 6-24-24 per gallon containers, 2.5 oz per 5 gallons, 6 oz per 24 inch boxes.

FOR COUNCIL APPROVAL ONLY

Sunland Analytical
11419 Sunrise Gold Circle, #10
Rancho Cordova, CA 95742
(916) 852-8557

DATE 01/30/2026
SUN NUMBER 198896

Information requested by:
Joel DeJong
City Of Roseville

Information for:
PARK SITE JM-51
Sample ID: JM-51

SOIL RECOMMENDATIONS FOR LANDSCAPE GARDENING

Summary and Suggested Sequence of Soil Improvements (#/1000 Sq.Ft.)

Organic Amendment	3	Yd./1000 Sq.Ft.	Bulk organic amendment (nitrified). or in Calif. if Org.Mat. less than 6% use 4 yd compost.
N-P-K Fertilizer	See above chart		
Micro Nutrients			
Copper	0.2	#	Copper sulfate
Iron	10	#	Ironite or similar product
Zinc	0.5	#	Zinc Sulfate
Boron	0.5	oz	Boric Acid - excess TOXIC !!!
Sulfate-Sulfur	2	#	Ammonium Sulfate

Maintenance Fertilization

Apply 5 pounds of Ammonium sulfate (21-0-0) per 1000 sq.ft.every month until plants become established. After established, apply 28-3-4 (or similar preparation) to provide desired growth rate and color.

FOR COUNCIL APPROVAL ONLY

FUHRMAN LEAMY LAND GROUP HEREBY EXPRESSLY RESERVES ITS COMMON LAW COPYRIGHT AND OTHER PROPERTY RIGHTS IN THESE PLANS. THESE PLANS AND DRAWINGS ARE NOT TO BE REPRODUCED, CHANGED OR COPIED IN ANY FORM OR MANNER WHATSOEVER WITHOUT FIRST OBTAINING THE EXPRESS WRITTEN PERMISSION OF FUHRMAN LEAMY LAND GROUP NOR ARE THEY TO BE ASSIGNED TO ANY THIRD PARTY WITHOUT FIRST OBTAINING WRITTEN PERMISSION AND CONSENT.

CITY OF ROSEVILLE
CALIFORNIA

PARKS, RECREATION & LIBRARIES DEPARTMENT

BENCHMARK ELEV. 120.15 (NGVD 88)

CITY B.M. 126 (Roseville)

BENCKMARK DESCRIPTION: 3 ¼" BRASS DISC STAMPED 2018 PLS 8278, LOCATED AT THE NORTHEAST CORNER OF THE INTERSECTION OF FIDDYMENT ROAD AND WESTLAKE DRIVE ON THE TOP OF CURB AT NORTH CURB RETURN.

FOR BUILDING DEPARTMENT REVIEW:

SITE ACCESSIBILITY:	SA-1.0
SHADE STRUCTURE:	LC-2.1
ELECTRICAL:	E0.1, E0.2, E0.3, E1.0, E2.0 & E2.1

SITE MAP

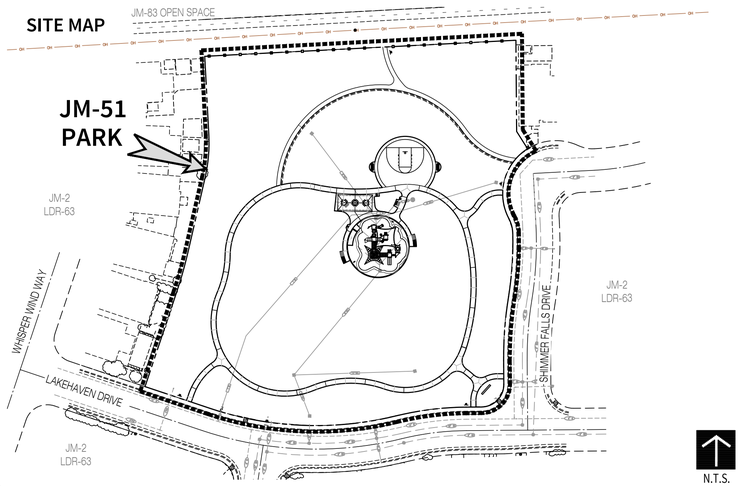

MODEL CODES

ALL WORK SHALL CONFORM TO THE FOLLOWING MODEL CODES:

2022 CALIFORNIA BUILDING CODE WITH CITY OF ROSEVILLE AMENDMENTS (CBC) ,

2022 CALIFORNIA GREEN BUILDING STANDARDS CODE (CGBSC),

2022 CALIFORNIA MECHANICAL CODE (CMC),

2022 CALIFORNIA PLUMBING CODE (CPC),

2022 CALIFORNIA ELECTRICAL CODE WITH CITY AMENDMENTS (CEC),

2022 CALIFORNIA ENERGY CODE (CEC PART 6),

2022 CALIFORNIA FIRE CODE WITH CITY OF ROSEVILLE AMENDMENTS (RFC).

SPECIAL INSPECTIONS

1704.3.3 -	HIGH STRENGTH BOLTING PER REQUIREMENTS ON SHEET 4 OF SHADE STRUCTURE DRAWINGS.
1704.4 -	CONCRETE CONSTRUCTION PER REQUIREMENTS ON SHEET 2.1 OF SHADE STRUCTURE DRAWINGS.

BUILDING CLASSIFICATION

A.	OCCUPANCY GROUP:	U
B.	TYPE OF CONSTRUCTION:	V-B NON SPRINKLED
C.	FLOOR AREA (S.F.):	550 S.F.
D.	NUMBER OF STORIES:	1
E.	TOTAL OCCUPANT LOAD:	NA

HOURS OF CONSTRUCTION

IN ACCORDANCE WITH THE CITY'S NOISE ORDINANCE, THE HOURS OF PROJECT CONSTRUCTION SHALL BE LIMITED TO THE FOLLOWING:
7:00 A.M. TO 7:00 P.M. (MONDAY THRU FRIDAY)
8:00 A.M. TO 8:00 P.M. (SATURDAY , SUNDAY & HOLIDAYS)

NOTE:

IT IS THE RESPONSIBILITY OF THE CONTRACTOR TO PROVIDE ALL MATERIALS AND WORK AS DETAILED IN THE CITY OF ROSEVILLE PARKS CONSTRUCTION STANDARDS - JULY 2025 OR LATEST EDITION AND THE CITY OF ROSEVILLE DESIGN & CONSTRUCTION STANDARDS - JANUARY 2013 WITH 2021 AMENDMENTS OR LATEST EDITION. CONTRACTOR SHALL PROVIDE SUBMITTALS BASED ON THE PROVIDED DRAWINGS AND ALL REQUIREMENTS IN THE ABOVE MENTIONED GUIDELINES.

STATE WATER RESOURCES CONTROL BOARD W.D.I.D. IDENTIFICATION NO.:

5S31xxxxxxx

MS4 PERMIT INFORMATION

ANTICIPATED START DATE:	FEBRUARY 2026
ANTICIPATED COMPLETION DATE:	JULY 2026
PARCEL SIZE:	2.6 AC
ESTIMATED DISTRIBUTION OF SOIL:	2.6 AC
NEAREST CREEK:	UNNAMED TRIBUTARY 10' NORTH

VICINITY MAP

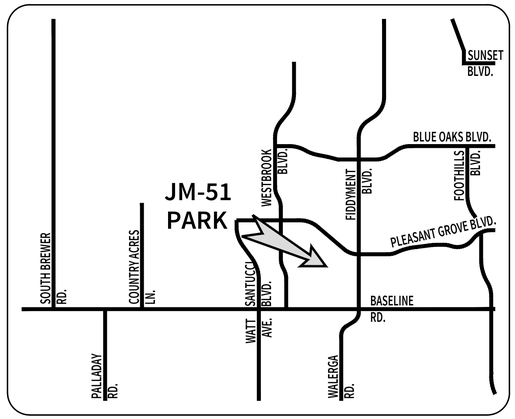

CITY OF ROSEVILLE GENERAL NOTES:

1. ALL CONSTRUCTION AND MATERIALS SHALL CONFORM TO THESE PLANS AND THE LATEST EDITION AND AMENDMENTS OF THE CITY OF ROSEVILLE DESIGN AND CONSTRUCTION STANDARDS.
2. THE CITY OF ROSEVILLE IS A MEMBER OF THE UNDERGROUND SERVICE ALERT (U.S.A.) ONE-CALL SYSTEM. THE CONTRACTORS SHALL NOTIFY THE U.S.A. CENTER 48 HOURS IN ADVANCE OF PERFORMING ANY EXCAVATION WORK BY CALLING 1-800-227-2600.
3. THE CONTRACTOR SHALL MARK IN WHITE PAINT ALL AREAS TO BE EXCAVATED PRIOR TO CONTACTING U.S.A. ANY AREAS NOT MARKED WILL NOT BE SUBJECT TO U.S.A., AND THE CONTRACTOR SHALL BE RESPONSIBLE FOR ANY DAMAGE RESULTING FROM EXCAVATION.
4. THE CONTRACTOR SHALL EXPOSE AND VERIFY LOCATIONS AND ELEVATIONS OF EXISTING UNDERGROUND UTILITIES PRIOR TO CONSTRUCTION OF THE NEW IMPROVEMENTS CONNECTING TO OR IN THE VICINITY OF THE SAME.
5. THE CONTRACTOR SHALL BE RESPONSIBLE FOR THE PROTECTION OF ALL EXISTING MONUMENTS AND OTHER SURVEY MARKERS ON THE JOB SITE.
6. THE CONTRACTOR SHALL PLACE BOXED SURVEY MONUMENTS WITH 1-1/2" BRONZE HEAD SET IN CONCRETE (STD. DWG. ST-36) AT LOCATIONS SHOWN ON THESE PLANS.
7. A.C. SURFACE SHALL BE CUT TO A NEAT, STRAIGHT LINE PARALLEL WITH THE STREET CENTERLINE AND THE EXPOSED EDGE SHALL BE TACKED WITH EMULSION PRIOR TO PAVING. THE EXPOSED BASE MATERIAL SHALL BE GRADED, RE-COMPACTED, AND RESEALED PRIOR TO PAVING.
8. ANY EXISTING CONCRETE SURFACE TO BE REMOVED SHALL BE SAW CUT TO A NEAT, STRAIGHT LINE.
9. THE CONTRACTOR SHALL SUBMIT A TRAFFIC CONTROL PLAN THAT SHALL BE ACCEPTED BY THE ENGINEERING DIVISION OF PUBLIC WORKS BEFORE START OF WORK IN RIGHT-OF-WAY AND SHALL BE IN ACCORDANCE WITH CALIFORNIA MUTCD LATEST EDITION. AT LEAST ONE LANE IN EACH DIRECTION SHALL REMAIN OPEN TO TRAFFIC UNLESS OTHERWISE SHOWN ON THE PLANS. TRAFFIC CONTROL HOURS ARE SUBJECT TO LIMITATION BY THE CITY. TRAFFIC CONTROL WITH LANE CLOSURES THAT AFFECT TRAFFIC FLOW MAY REQUIRE NIGHT WORK. IF, AS A PART OF TRAFFIC CONTROL MEASURES, A ROADWAY CLOSURE HAS BEEN APPROVED, THE CONTRACTOR SHALL NOTIFY DEVELOPMENT SERVICES CONSTRUCTION INSPECTOR 72 HOURS IN ADVANCE OF SETTING UP THE CLOSURE.
10. CURB RAMPS CONFORMING TO ALL ADA AND TITLE 24 REQUIREMENTS SHALL BE PLACED AT ALL NEW STANDARD CURB RETURNS (STANDARD DRAWING ST-27) AND STANDARD TYPE A-7 DRIVEWAYS. WHERE EXISTING RAMPS DO NOT MEET CURRENT ADA AND TITLE 24 REQUIREMENTS, THE RAMPS SHALL BE UPGRADED IN CONFORMANCE WITH MINIMUM TITLE 24 REQUIREMENTS. WHERE EXISTING RAMPS DO NOT INCLUDE DETECTABLE WARNING PANELS (TRUNCATED DOMES), PANELS SHALL BE RETROFITTED PER THE CONSTRUCTION STANDARDS.
11. DRAIN INLETS NOT WITHIN A PAVED AREA SHALL HAVE A 12" WIDE COLLAR OF 6" THICK P.C.C. OR 2" THICK A.C.
12. PRIOR TO THE CERTIFICATE OF COMPLETION ON ALL SINGLE-FAMILY RESIDENTIAL SUBDIVISIONS, THE DEVELOPER SHALL SUBMIT A LETTER FROM THE POST OFFICE STATING THAT ITS REQUIREMENTS FOR MAILBOX CLUSTER PADS HAVE BEEN SATISFIED.
13. ALL UNDERGROUND UTILITIES WITHIN EXISTING OR PROPOSED CITY OF ROSEVILLE EASEMENTS SHALL REQUIRE A MINIMUM OF 90% COMPACTION ON THE TRENCH BACKFILL. COMPACTION OF BACKFILL BY JETTING IS NOT PERMITTED IN CITY OF ROSEVILLE RIGHT OF WAY AND EASEMENT AREAS OR WITHIN DEDICATED RECLAIMED WATER, STORM, SEWER OR WATER EASEMENTS AND MAINS.
14. THE CONTRACTOR SHALL CONDUCT A PRE-CONSTRUCTION MEETING ONE-WEEK PRIOR TO STARTING WORK. MEMBERS OF THE CITY OF ROSEVILLE DEVELOPMENT SERVICES DEPARTMENT, ENVIRONMENTAL UTILITIES DEPARTMENT AND ALL OTHER UTILITY REPRESENTATIVES SHALL BE NOTIFIED BY THE CONTRACTOR AS TO THE DATE AND LOCATION OF THE MEETING.
15. PRIOR TO EXCAVATION OF TRENCHES 5 FEET OR DEEPER, THE CONTRACTOR SHALL SUBMIT TO THE DEVELOPMENT SERVICES DEPARTMENT OR ENVIRONMENTAL UTILITIES DEPARTMENT INSPECTOR A COPY OF THE COMPANY'S ANNUAL CALOSHA TRENCHING PERMIT AND A COPY OF THE COMPANY'S LETTER INFORMING CALOSHA OF THE TIME THE TRENCHING IS COMMENCING AND THE LOCATION OF THE WORK.
16. ALL PAINTED TRAFFIC STRIPES, ARROWS, AND PAVEMENT MARKINGS SHALL BE CONSTRUCTED WITH THERMOPLASTIC MATERIAL TO THE SPECIFICATIONS SET FORTH IN CHAPTER 3 OF THE CALIFORNIA MUTCD LATEST EDITION. NON-REFLECTIVE PAVEMENT MARKERS SHALL CONSIST OF CERAMIC MARKERS ONLY CONFORMING TO CHAPTER 3 OF THE CALIFORNIA MUTCD LATEST EDITION.
17. THE DEVELOPERS CONTRACTOR SHALL TAKE EXTREME CARE TO PROTECT EXISTING SITE AND ADJACENT IMPROVEMENTS FROM DAMAGE. THE CONTRACTOR SHALL BE RESPONSIBLE TO REPAIR OR MAKE REPLACEMENT OF ALL CRACKED AND OTHERWISE PRE-EXISTING DAMAGED PUBLIC IMPROVEMENTS ALONG THE FRONTAGE OF THE PROJECT SITE AND ANY DAMAGE RESULTING FROM CONSTRUCTION TO CURRENT CITY STANDARDS AND AT THEIR OWN EXPENSE. THE EXTENT OF THE REPAIRS SHALL BE DETERMINED BY THE DEVELOPMENT SERVICES CONSTRUCTION INSPECTOR AND SHALL BE COMPLETED PRIOR TO THE CITY ACCEPTANCE OF THE IMPROVEMENTS.
18. WHERE COMBINATIONS OF SIDEWALK OR CURB AND GUTTER ARE PLACED CONTIGUOUS TO EXISTING, ALL ADJOINING EXISTING CONCRETE VERTICAL FACES SHALL BE DOWELED. ALL ABUTTING SIDEWALK ENDS SHALL BE DOWELED MID-SECTION VERTICALLY WITH TWO DOWELS FOR FOUR THROUGH SIX-FOOT WIDE SIDEWALK AND THREE DOWELS FOR WIDER SIDEWALK. ABUTTING CURB AND GUTTER ENDS SHALL BE DOWELED TWICE. 18 INCHES APART AT GUTTER PAN MID-SECTION. DOWEL CONNECTIONS OF LONGITUDINAL RUNS OF SIDEWALK TO BACK OF CURB SHALL BE THREE FEET ON CENTER. ALL DOWELS SHALL BE 16 INCHES LONG, GRADE 60; #4 REBAR PENETRATING FOUR INCHES. THE DOWEL HOLE SHALL BE 5/8-INCH DIAMETER AT A SLIGHT HORIZONTAL ANGLE FROM PERPENDICULAR. THE PENETRATING PORTION OF THE DOWEL AND THE ENTIRE (CLEANED) VERTICAL SURFACE OF THE ADJOINING, EXISTING CONCRETE SHALL BE THOROUGHLY COATED WITH STATE STANDARD TWO-PART EPOXY.
19. WHEN SAWCUTTING WITHIN THE STREET FOR TRENCHING OR OTHER PURPOSES, CONTRACTOR SHALL GRIND 1½" OF PAVEMENT BETWEEN THE LANE LINES (FROM LANE STRIPE TO LANE STRIPE) UPON COMPLETION OF THE SAWCUTTING AND OR TRENCHING WORK. WHERE THE SAWCUTTING OCCURS BETWEEN THE CURB AND GUTTER AND NEAREST LANE STRIPE (INCLUDING BIKE LANES), THE SAME 1 ½" GRIND SHALL BE REQUIRED. CONTRACTOR TO PLACE A PETROMAT FABRIC OR APPROVED EQUAL BY THE CITY OF ROSEVILLE AND OVERLAY FROM LANE STRIPE TO LANE STRIPE, OR CURB TO LANE STRIPE AND RESTRIPE OR REPLACE ANY DELINEATORS REMOVED DURING THE GRIND.
20. ALL PUBLICLY MAINTAINED STORM DRAIN ON PRIVATE PROPERTY SHALL BE A MINIMUM OF 12 INCHES IN DIAMETER AND SHALL BE RCP CL IV, UNLESS OTHERWISE APPROVED BY THE CITY ENGINEER.
21. FOR RESIDENTIAL SUBDIVISIONS, UNLESS OTHERWISE APPROVED BY DEVELOPMENT SERVICES ENGINEERING, THE FINAL GRADING OF THE PROJECT SITE SHALL BE CONSTRUCTED TO ACCOMMODATE A MAXIMUM DRIVEWAY SLOPE OF 14% FOR EACH RESIDENTIAL LOT, AS MEASURED FROM THE BACK OF THE SIDEWALK TO THE GARAGE (20-FT SET BACK). IT WILL REMAIN THE RESPONSIBILITY OF THE BUILDERS/DEVELOPER TO DESIGN A HOUSE THAT PROVIDES SUITABLE ACCESS TO THE PARCEL.
22. THE CONTRACTOR SHALL PLACE FILTER FABRIC BETWEEN THE INITIAL BEDDING AND BACKFILL AND THE TRENCH BACKFILL FOR SANITARY SEWERS DEPTH GREATER THAN 15 FEET MEASURED TO THE PIPE INVERT.

CITY OF ROSEVILLE FIRE DEPARTMENT GENERAL NOTES:

REF: CFC APPENDIX CHAPTER 1 SECTION 105.4.2 & SECTION 105.4.7 AS AMENDED BY CITY OF ROSEVILLE.

1. PRIOR TO COMBUSTIBLE MATERIALS BEING BROUGHT TO THE SITE, FIRE APPARATUS ACCESS ROADS SHALL BE PROVIDED TO WITHIN 150 FEET OF ALL PORTIONS OF THE EXTERIOR WALLS OF THE FIRST STORY OF ANY STRUCTURES AND COMBUSTIBLE STORAGE PILES. FIRE APPARATUS ACCESS ROADS SHALL BE FULLY PAVED AND SHALL BE DESIGNED TO SUPPORT THE IMPOSED WEIGHT OF A FIRE APPARATUS (34 TONS GVW). ACCESS ROADS SHALL BE PROVIDED WITH A MINIMUM 20-FOOT ROADWAY WIDTH AND 13 FOOT 6-INCH VERTICAL CLEARANCE.
2. CONSTRUCT/ON MATERIAL AND VEHICLES SHALL NOT OBSTRUCT FIRE APPARATUS ACCESS TO FIRE APPARATUS ROADS, FIRE HYDRANTS OR THE BUILDING.
3. TEMPORARY ABOVE GROUND FUEL STORAGE TANKS MAY BE USED ON CONSTRUCT/ON SITES FOR DIESEL FUEL ONLY AND SHALL NOT EXCEED 1, 000-GALLON LIQUID CAPACITY. SUCH INSTALLATIONS SHALL COMPLY WITH ALL APPLICABLE PROVISIONS OF THE CITY FIRE CODE. A FIRE DEPARTMENT PERMIT SHALL BE OBTAINED PRIOR TO THE PLACEMENT OF SUCH TANKS ON THE SITE.
4. THE STREET ADDRESS OF THE CONSTRUCTION SITE SHALL BE CLEARLY IDENTIFIED AT ALL ENTRANCES INTO THE PROJECT. SUCH NUMBERS SHALL BE CLEARLY VISIBLE FROM THE STREET FRONTING THE PROPERTY AND SHALL CONTRAST IN COLOR WITH THEIR BACKGROUND (MINIMUM 6-INCH LETTERING).
5. FIRE SAFETY DURING CONSTRUCT/ON. CHAPTER 33 OF THE CALIFORNIA FIRE CODE REQUIRES CERTAIN SAFETY PROCEDURES TO BE FOLLOWED DURING NEW CONSTRUCT/ON AND REMODELS. THIS ARTICLE CONCERNS FIRE SAFETY IN THE FOLLOWING AREAS: ACCESS, WATER SUPPLY, EXTINGUISHERS, STANDPIPES, DEBRIS, MOTORIZED EQUIPMENT, HEATING DEVICES, SMOKING, CUTTING AND WELDING, FLAME PRODUCING EQUIPMENT, FLAMMABLE LIQUIDS, ASPHALT AND TAR KETTLES, TEMPORARY WIRING, EMERGENCY TELEPHONE MODIFICATION OF EXISTING SYSTEMS, EXITS, BURNING OF ANY MATERIAL, AND FIRE WATCH. IT IS YOUR RESPONSIBILITY TO BECOME FAMILIAR WITH THESE REQUIREMENTS AND SEE THAT ALL PERSONS ON THE JOB SITE COMPLY.
6. THE BURNING OF COMBUSTIBLE CONSTRUCTION MATERIAL AND TRASH IS PROHIBITED.
7. A MINIMUM 3-FOOT CLEAR SPACE SHALL BE PROVIDED AND MAINTAINED AROUND FIRE PROTECTION EQUIPMENT.
8. AT ALL FIRE HYDRANT LOCATIONS, A BLUE REFLECTIVE PAVEMENT MARKER SHALL BE INSTALLED ONE FOOT OFF PAVED CENTERLINE OR MEDIAN ON THE HYDRANT SIDE OF THE ROADWAY.
9. IF SITE SURVEY OR EARTH MOVING WORK RESULTS IN THE DISCOVERY OF HAZARDOUS MATERIALS IN CONTAINERS, OR WHAT APPEARS TO BE HAZARDOUS WASTES RELEASED INTO THE GROUND, THE CONTRACTOR OR APPLICANT SHALL IMMEDIATELY REPORT THE FINDING TO THE ROSEVILLE FIRE DEPARTMENT VIA PHONE AT (916) 774-5800. ALL SUSPECTED AREAS SHALL BE MARKED OFF WITH APPROVED SIGNAGE OR CAUTION TAPE UNTIL SUCH TIME THAT A REPRESENTATIVE FROM THE FIRE DEPARTMENT DETERMINES WHETHER THE RELEASE IS REPORTABLE OR NOT AND IF SITE REMEDIATION IS REQUIRED.
10. THE REQUIRED MINIMUM FIRE FLOW FOR THE PROTECTION OF THE PROPOSED PROJECT IS 1,500 GALLONS PER MINUTE WITH 20 POUNDS PER SQUARE INCH RESIDUAL WATER PRESSURE REMAINING IN THE SYSTEM.
11. FIRE HYDRANTS SHALL BE INSTALLED AND IN SERVICE CAPABLE OF PROVIDING THE REQUIRED FIRE FLOW PRIOR TO ANY COMBUSTIBLE CONSTRUCT/ON OR ON-SITE STORAGE OF COMBUSTIBLE MATERIALS.
12. ALL FIRE HYDRANTS SHALL BE "BAGGED" OR OUT-OF-SERVICE UNTIL THE ABOVE FOUR (4) INSPECTIONS ARE COMPLETED.
13. WATER SUPPLY CONTROL VALVES SHALL NOT BE CLOSED BY THE CONTRACTOR UPON ACCEPTANCE OF THE FIRE-FLOW TEST BY THE FIRE DEPARTMENT, UNLESS ENVIRONMENTAL UTILITIES AND THE FIRE DEPARTMENT ARE CONTACTED AND ADVISED OF THE CLOSURE.
14. TESTING OF ALL FIRE SYSTEMS SHALL BE PERFORMED PRIOR TO THE SALES OFFICE CAN BE OPENED FOR BUSINESS.
15. FRAMING CONSTRUCTION CANNOT COMMERCE UNTIL ACCESS ROADS AND PUBLIC FIRE HYDRANTS ARE APPROVED BY THE FIRE DEPARTMENT.
16. IF THIS PROJECT WILL BE PHASED, THE FIRE DEPARTMENT REQUIREMENTS FOR ACCESS AND CIRCULATION THROUGHOUT SHALL BE APPROVED BY THE CITY FOR SUCH PROPOSAL. ACCESS ROAD SHALL COMPLY IN ACCORDANCE WITH THE CALIFORNIA FIRE CODE AND THE CITY OF ROSEVILLE'S AMENDMENTS. A SEPARATE PHASING PLAN SHALL BE REVIEWED AND APPROVED BY THIS DEPARTMENT.

FOR BID/CONSTRUCTION

CONSULTANTS/SUB-CONSULTANTS

CIVIL ENGINEERING:	TSD ENGINEERING DANA MOORE 916.608.0707 x104
ELECTRICAL ENGINEERING:	CAPITAL ENGINEERING NATHAN HEARN 916.851.3568

SHEET INDEX

CV-1.0	COVER SHEET	1
CV-2.0A	CAL GREEN DOCUMENTATION	2
CV-2.0B	CAL GREEN DOCUMENTATION	3
CV-2.0C	CAL GREEN DOCUMENTATION	4
SA-1.0	SITE ACCESSIBILITY PLAN	5
SW-1.0	SCOPE OF WORK PLAN	6
LC-1.0	LANDSCAPE CONSTRUCTION PLAN & KEYNOTES	7
LC-2.0	LANDSCAPE CONSTRUCTION DETAILS	8
CS	COVER SHEET (SHADE STRUCTURE)	9
1	ARCHITECTURAL ELEVATIONS (SHADE STRUCTURE)	10
2	ANCHOR & FOOTING LAYOUT (SHADE STRUCTURE)	11
2.1	ANCHOR & FOOTING DETAILS (SHADE STRUCTURE)	12
3	STRUCTURAL FRAMING PLAN (SHADE STRUCTURE)	13
4	FRAME CONNECTION DETAILS (SHADE STRUCTURE)	14
4.1	FRAME CONNECTION DETAILS (SHADE STRUCTURE)	15
6	ROOF OVERVIEW (SHADE STRUCTURE)	16
06.1	ROOF LAYOUT (SHADE STRUCTURE)	17
6.2	ROOF LAYOUT (SHADE STRUCTURE)	18
7	ROOF CONNECTION DETAILS (SHADE STRUCTURE)	19
7.1	ROOF CONNECTION DETAILS (SHADE STRUCTURE)	20
7.2	ROOF CONNECTION DETAILS (SHADE STRUCTURE)	21
C1.0	GRADING & DRAINAGE PLAN	22
C1.1	GRADING & DRAINAGE DETAILS	23
C1.2	DRAINAGE DETAILS - CITY	24
C2.0	EROSION CONTROL PLAN	25
LL-1.0	LANDSCAPE LAYOUT PLAN & NOTES	26
LI-1.0	LANDSCAPE IRRIGATION PLAN & LEGEND	27
LI-1.1	LANDSCAPE IRRIGATION PLAN - MAINLINE LAYOUT	28
LI-2.0	LANDSCAPE IRRIGATION NOTES	29
LI-2.1	MWELO DOCUMENTATION	30
LI-2.2	LANDSCAPE IRRIGATION DETAILS	31
LI-2.3	LANDSCAPE IRRIGATION DETAILS	32
LP-1.0	LANDSCAPE PLANTING PLAN & LEGEND	33
LP-2.0	LANDSCAPE PLANTING NOTES & DETAILS	34
E0.1	ELECTRICAL COVER SHEET	35
E0.2	SERVICE PEDESTAL ONE-LINE DIAGRAM & ELEVATION, FEEDER SCHEDULE AND LOAD CALCULATIONS	36
E0.3	TITLE 24 LTO FORMS	37
E1.0	ELECTRICAL SITE PLAN	38
E2.0	ELECTRICAL DETAILS	39
E2.1	ELECTRICAL DETAILS	40
	TOTAL SHEETS	40

CITY OF ROSEVILLE DEVELOPMENT SERVICES DEPARTMENT

CITY ENGINEER DATE

UTILITY REPRESENTATIVES

UTILITY	COMPANY	CONTACT	PHONE
U.S.A.	-	-	1.800.642.2444
GAS	PG&E	JEANETTE JOHNSON	530.883.3147
ELECTRICITY	ROSEVILLE ELECTRIC	KEITH LITTS	916.580.9405
TELEPHONE	ROSEVILLE TELEPHONE	GEORGE DEMPSEY	916.786.4351
WATER	CITY OF ROSEVILLE	ENVIRONMENTAL UTILITIES	916.774.5750
SEWER	CITY OF ROSEVILLE	ENVIRONMENTAL UTILITIES	916.774.5750
DRAINAGE	DEVELOPMENT SERVICES ENGINEERING	ENGINEERING	916.774.5339
T.V. CABLE	COMCAST	KATHY DEAN	916.786.8443
FIRE	CITY OF ROSEVILLE	JORDAN PAUL	916.774.5800

CWJ# - 500289
EN# - 25-0626

JM-51 PARK

PREPARED FOR:
TARA GEE
CITY OF ROSEVILLE - PARKS, RECREATION & LIBRARIES DEPARTMENT
316 VERNON STREET, SUITE 400 ROSEVILLE, CA 95678
916.774.5253

FUHRMAN LEAMY LAND GROUP
DESIGN • SERVICE • SOLUTIONS
3400 DOUGLAS BLVD., SUITE 275
ROSEVILLE, CALIFORNIA 95661
916.783.5263 • FLLANDGROUP.COM

JOB NO. : CRV- 25026

CITY OF ROSEVILLE APPROVAL

PROJECT:
JM-51PARK

7060 LAKEHAVEN DRIVE
ROSEVILLE, CA

CLIENT:
CITY OF ROSEVILLE

REVISIONS	DATE
△	
△	
△	
△	

ISSUE		DATE
1	1ST SUBMITTAL	9.19.2025
2	2ND SUBMITTAL	10.22.2025
3	3RD SUBMITTAL	12.03.2025
4	4TH SUBMITTAL	2.03.2026
5		

REGISTERED LANDSCAPE ARCHITECT
KEVIN C. LEAMY
No. 4965
12/31/26
Renewal Date
2.01.2026
DATE
STATE OF CALIFORNIA

DRAWN : AM
CHECKED : KCL
SCALE: AS SHOWN

SHEET TITLE:
COVER SHEET

SHEET
CV-1.0
1 OF 40 SHEETS

FURTHERMORE, LEAMY, LAND GROUP HEREBY EXPRESSLY RESERVES ITS COMMON LAW COPYRIGHT AND OTHER PROPERTY RIGHTS IN THESE PLANS. THESE PLANS AND DRAWINGS ARE NOT TO BE REPRODUCED, CHANGED OR COPIED IN ANY FORM OR MANNER WHATSOEVER WITHOUT FIRST OBTAINING THE EXPRESS WRITTEN PERMISSION OF FURTHERMORE, LEAMY, LAND GROUP NOR ARE THEY TO BE ASSIGNED TO ANY THIRD PARTY WITHOUT FIRST OBTAINING WRITTEN PERMISSION AND CONSENT

2022 CALIFORNIA GREEN BUILDING STANDARDS CODE

NONRESIDENTIAL MANDATORY MEASURES, SHEET 1 (January 2023)

Y = YES
N/A = NOT APPLICABLE
RESPON. PARTY = RESPONSIBLE PARTY (ie: ARCHITECT, ENGINEER, OWNER, CONTRACTOR, INSPECTOR ETC.)

CHAPTER 3
GREEN BUILDING
SECTION 301 GENERAL

301.1 SCOPE. Buildings shall be designed to include the green building measures specified as mandatory in the application checklists contained in this code. Voluntary green building measures are also included in the application checklists and may be included in the design and construction of structures covered by this code, but are not required unless adopted by a city, county, or city and county as specified in Section 101.7.

301.3 NONRESIDENTIAL ADDITIONS AND ALTERATIONS. [BSC-CG] The provisions of individual sections of Chapter 5 apply to newly constructed buildings, building additions of 1,000 square feet or greater, and/or building alterations with a permit valuation of $200,000 or above (for occupancies within the authority of California Building Standards Commission). Code sections relevant to additions and alterations shall only apply to the portions of the building being added or altered within the scope of the permitted work.

A code section will be designated by a banner to indicate where the code section only applies to newly constructed buildings [N] or to additions and/or alterations [A]. When the code section applies to both, no banner will be used.

301.3.1 Nonresidential additions and alterations that cause updates to plumbing fixtures only:

Note: On and after January 1, 2014, certain commercial real property, as defined in Civil Code Section 1101.3, shall have its noncompliant plumbing fixtures replaced with appropriate water-conserving plumbing fixtures under specific circumstances. See Civil Code Section 1101.1 *et seq.* for definitions, types of commercial real property affected, effective dates, circumstances necessitating replacement of noncompliant plumbing fixtures, and duties and responsibilities for ensuring compliance.

301.3.2 Waste Diversion. The requirements of Section 5.408 shall be required for additions and alterations whenever a permit is required for work.

301.4 PUBLIC SCHOOLS AND COMMUNITY COLLEGES. (see GBSC)
301.5 HEALTH FACILITIES. (see GBSC)

SECTION 302 MIXED OCCUPANCY BUILDINGS

302.1 MIXED OCCUPANCY BUILDINGS. In mixed occupancy buildings, each portion of a building shall comply with the specific green building measures applicable to each specific occupancy.

SECTION 303 PHASED PROJECTS

303.1 PHASED PROJECTS. For shell buildings and others constructed for future tenant improvements, only those code measures relevant to the building components and systems considered to be new construction (or newly constructed) shall apply.

303.1.1 Initial Tenant improvements. The provisions of this code shall apply only to the initial tenant improvements to a project. Subsequent tenant improvements shall comply with the scoping provisions in Section 303.3 non-residential additions and alterations.

ABBREVIATION DEFINITIONS:

HCD	Department of Housing and Community Development
BSC	California Building Standards Commission
DSA-SS	Division of the State Architect, Structural Safety
OSHPD	Office of Statewide Health Planning and Development
LR	Low Rise
HR	High Rise
AA	Additions and Alterations
N	New

CHAPTER 5
NONRESIDENTIAL MANDATORY MEASURES
DIVISION 5.1 PLANNING AND DESIGN

SECTION 5.101 GENERAL
5.101.1 SCOPE
The provisions of this chapter outline planning, design and development methods that include environmentally responsible site selection, building design, building siting and development to protect, restore and enhance the environmental quality of the site and respect the integrity of adjacent properties.

SECTION 5.102 DEFINITIONS
5.102.1 DEFINITIONS
The following terms are defined in Chapter 2 *(and are included here for reference)*

CUTOFF LUMINAIRES. Luminaires whose light distribution is such that the candela per 1000 lamp lumens does not numerically exceed 25 (2.5 percent) at an angle of 90 degrees above nadir, and 100 (10 percent) at a vertical angle of 80 degrees above nadir. This applies to all lateral angles around the luminaire.

LOW-EMITTING AND FUEL EFFICIENT VEHICLES.
Eligible vehicles are limited to the following:

1. Zero emission vehicle (ZEV), enhanced advanced technology PZEV (enhanced AT ZEV) or transitional zero emission vehicles (TZEV) regulated under CCR, Title 13, Section 1962.
2. High-efficiency vehicles, regulated by U.S. EPA, bearing a fuel economy and greenhouse gas rating od 9 oe 10 as regulated under 40 CFR Section 600 Subpart D.

NEIGHBORHOOD ELECTRIC VEHICLE (NEV). A motor vehicle that meets the definition of "low-speed vehicle" either in Section 385.5 of the Vehicle Code or in 49CFR571.500 (as it existed on July 1, 2000), and is certified to zero-emission vehicle standards.

TENANT-OCCUPANTS. Building occupants who inhabit a building during its normal hours of operation as permanent occupants, such as employees, as distinguished from customers and other transient visitors.

VANPOOL VEHICLE. Eligible vehicles are limited to any motor vehicle, other than a motortruck or truck tractor, designed for carrying more than 10 but not more than 15 persons including the driver, which is maintained and used primarily for the nonprofit work-related transportation of adults for the purpose of ridesharing.

Note: Source: Vehicle Code, Division 1, Section 668

ZEV. Any vehicle certified to zero-emission standards.

SECTION 5.106 SITE DEVELOPMENT
5.106.1 STORM WATER POLLUTION PREVENTION FOR PROJECTS THAT DISTURB LESS THAN ONE ACRE OF LAND. Newly constructed projects and additions which disturb less than one acre of land, and are not part of a larger common plan of development or sale, shall prevent the pollution of storm water runoff from the construction activities through one or more of the following measures:

5.106.1.1 Local ordinance. Comply with a lawfully enacted storm water management and/or erosion control ordinance.

5.106.1.2 Best Management Practices (BMPs). Prevent the loss of soil through wind or water erosion by implementing an effective combination of erosion and sediment control and good housekeeping BMPs.

1. Soil loss BMPs that should be considered for implementation as appropriate for each project include, but are not limited to, the following:
   a. Scheduling construction activity during dry weather, when possible.
   b. Preservation of natural features, vegetation, soil, and buffers around surface waters.
   c. Drainage swales or lined ditches to control stormwater flow.
   d. Mulching or hydroseeding to stabilize disturbed soils.
   e. Erosion control to protect slopes.
   f. Protection of storm drain inlets (gravel bags or catch basin inserts).
   g. Perimeter sediment control (perimeter silt fence, fiber rolls).
   h. Sediment trap or sediment basin to retain sediment on site.
   i. Stabilized construction exits.
   j. Wind erosion control.
   k. Other soil loss BMPs acceptable to the enforcing agency.
2. Good housekeeping BMPs to manage construction equipment, materials, non-stormwater discharges and wastes that should be considered for implementation as appropriate for each project include, but are not limited to, the following:
   a. Dewatering activities.
   b. Material handling and waste management.
   c. Building materials stockpile management.
   d. Management of washout areas (concrete, paints, stucco, etc.).
   e. Control of vehicle/equipment fueling to contractor's staging area.
   f. Vehicle and equipment cleaning performed off site.
   g Spill prevention and control.
   h. Other housekeeping BMPs acceptable to the enforcing agency.

5.106.2 STORMWATER POLLUTION PREVENTION FOR PROJECTS THAT DISTURB ONE OR MORE ACRES OF LAND. Comply with all lawfully enacted stormwater discharge regulations for projects that (1) disturb one acre or more of land, or (2) disturb less than one acre of land but are part of a larger common plan of development sale.

Note: Projects that (1) disturb one acre or more of land, or (2) disturb less than one acre of land but are part of the larger common plan of development or sale must comply with the post-construction requirements detailed in the applicable National Pollutant Discharge Elimination System (NPDES) General permit for Stormwater Discharges Associated with Construction and Land Disturbance Activities issued by the State Water Resources Control Board or the Lahontan Regional Water Quality Control Board (for projects in the Lake Tahoe Hydrologic Unit).

The NPDES permits require postconstruction runoff (post-project hydrology) to match the preconstruction runoff (pre-project hydrology) with the installation of postconstruction stormwater management measures. The NPDES permits emphasize runoff reduction through on-site stormwater use, interception, evapotranspiration, and infiltration through nonstructural controls, such as Low Impact Development (LID) practices, and conversation design measures. Stormwater volume that cannot be addressed using nonstructural practices is required to be captured in structural practices and be approved by the enforcing agency.

Refer to the current applicable permits on the State Water Resources Control Board website at: www.waterboards.ca.gov/constructionstormwater. Consideration to the stormwater runoff management measures should be given during the initial design process for appropriate integration into site development.

5.106.4 BICYCLE PARKING. For buildings within the authority of California Building Standards Commission as specified in Section 103, comply with Section 5.106.4.1. For buildings within the authority of the Division of the State Architect pursuant to Section 105, comply with Section 5.106.4.2

5.106.4.1 Bicycle parking. [BSC-CG] Comply with Sections 5.106.4.1.1 and 5.106.4.1.2; or meet the applicable local ordinance, whichever is stricter.

5.106.4.1.1 Short-term bicycle parking. If the new project or an addition or alteration is anticipated to generate visitor traffic, provide permanently anchored bicycle racks within 200 feet of the visitors' entrance, readily visible to passers-by, for 5% of new visitor motorized vehicle parking spaces being added, with a minimum of one two-bike capacity rack.
Exception: Additions or alterations which add nine or less visitor vehicular parking spaces.

5.106.4.1.2 Long-term bicycle parking. For new buildings with tenant spaces that have 10 or more tenant-occupants, provide secure bicycle parking for 5 percent of the tenant-occupant vehicular parking spaces with a minimum of one bicycle parking facility.

5.106.4.1.3 For additions or alterations that add 10 or more tenant-occupant vehicular parking spaces, provide secure bicycle parking for 5 percent of the tenant vehicular parking spaces being added, with a minimum of one bicycle parking facility.

5.106.4.1.4 For new shell buildings in phased projects provide secure bicycle parking for 5 percent of the anticipated tenant-occupant vehicular parking spaces with a minimum of one bicycle parking facility.

5.106.4.1.5 Acceptable bicycle parking facility for Sections 5.106.4.1.2, 5.106.4.1.3, and 5.106.4.1.4 shall be convenient from the street and shall meet one of the following:

1. Covered, lockable enclosures with permanently anchored racks for bicycles;
2. Lockable bicycle rooms with permanently anchored racks; or
3. Lockable, permanently anchored bicycle lockers.

Note: Additional information on recommended bicycle accommodations may be obtained from Sacramento Area Bicycle Advocates.

5.106.4.2 Bicycle parking. [DSA-SS] For public schools and community colleges, comply with Sections 5.106.4.2.1 and 5.106.4.2.2

5.106.4.2.1 Student bicycle parking. Provide permanently anchored bicycle racks conveniently accessed with a minimum of four two-bike capacity racks per new building.
5.106.4.2.2 Staff bicycle parking. Provide permanent, secure bicycle parking conveniently accessed with a minimum of two staff bicycle parking spaces per new building. Acceptable bicycle parking facilities shall be convenient from the street or staff parking area and shall meet one of the following:

1. Covered, lockable enclosures with permanently anchored racks for bicycles;
2. Lockable bicycle rooms with permanently anchored racks; or
3. Lockable, permanently anchored bicycle lockers.

5.106.5.3 Electric vehicle (EV) charging. [N] Construction to provide electric vehicle infrastructure and facilitate electric vehicle charging shall comply with Section 5.106.5.3.1 and shall be provided in accordance with regulations in the California Building Code and the California Electrical Code.

Exceptions:
1. On a case-by-case basis where the local enforcing agency has determined compliance with this section is not feasible based upon one of the following conditions:
   a. Where there is no local utility power supply
   b. Where the local utility is unable to supply adequate power.
   c. Where there is evidence suitable to the local enforcement agency substantiating the local utility infrastructure design requirements, directly related to the implementation of Section 5.106.5.3, may adversely impact the construction cost of the project.
2. Parking spaces accessible only by automated mechanical car parking systems are not required to comply with this code section

5.106.5.3.1 EV capable spaces.
[N] EV capable spaces shall be provided in accordance with Table 5.106.5.3.1 and the following requirements:
1. Raceways complying with the California Electrical Code and no less that 1-inch (25 mm) diameter shall be provided and shall originate at a service panel or a subpanel(s) serving the area, and shall terminate in close proximity to the proposed location of the EV capable and into a suitable listed cabinet, box,enclosure or equivalent. A common raceway may be used to serve multiple EV charging spaces.
2. A service panel or subpanel (s) shall be provided with panel space and electrical load capacity for a dedicated 208/240 volt, 40-ampere minimum branch circuit for each EV capable space, with delivery of 30-ampere minimum to an installed EVSE at each EVCS.
3. The electrical system and any on-site distribution transformers shall have sufficient capacity to supply full rated amperage at each EV capable space.
4. The service panel or subpanel circuit directory shall identify the reserved overcurrent protective devices space(s) as "EV CAPABLE". The raceway termination location shall be permanently and visibly marked as "EV CAPABLE."

Note: A parking space served by electric vehicle supply equipment or designed as a future EV charging space shall count as at least one standard automobile parking space only for the purpose of complying with any applicable minimum parking space requirements established by an enforcement agency. See vehicle Code Section 22511.2 for further details.

TABLE 5.106.5.3.1

TOTAL NUMBER OF ACTUAL PARKING SPACES	NUMBER OF REQUIRED EV CAPABLE SPACES	NUMBER OF EVCS (EV CAPABLE SPACES PROVIDED WITH EVSE)^2
0-9	0	0
10-25	2	0
26-50	8	2
51-75	13	3
76-100	17	4
101-150	25	6
151-200	35	9
201 AND OVER	20% of total[1]	25% of EV capable spaces[1]

1. Where there is insufficient electrical supply.
2. The number of required EVCS (EV capable spaces provided with EVSE) in column 3 count towards the total number of required EV capable spaces shown in column 2.

5.106.5.3.2 Electric vehicle charging stations (EVCS)
EV capable spaces shall be provided with EVSE to create EVCS in the number indicated in Table 5.106.5.3.1. The EVCS required by Table 5.106.5.3.1 may be provided with EVSE in any combination of Level 2 and Direct Current Fast Charging (DCFC), except that at least one Level 2 EVSE shall be provided.

One EV charger with multiple connectors capable of charging multiple EVs simultaneously shall be permitted if the electrical load capacity required by Section 5.106.5.3.1 for each EV capable space is accumulatively supplied to the EV charger.

The installation of each DCFC EVSE shall be permitted to reduce the minimum number of required EV capable spaces without EVSE by five and reduce proportionally the required electrical load capacity to the service panel or subpanel.

5.106.5.3.3 Use of automatic load management systems (ALMS).
ALMS shall be permitted for EVCS. When ALMS is installed, the required electrical load capacity specified in Section 5.106.5.3.1 for each EVCS may be reduced when serviced by an EVSE controlled by an ALMS. Each EVSE controlled by an ALMS shall deliver a minimum 30 amperes to an EV when charging one vehicle and shall deliver a minimum 3.3 kW while simultaneously charging multiple EVs.

5.106.5.3.4 Accessible EVCS.
When EVSE is installed, accessible EVSC shall be provided in accordance with the *California Building Code*, Chapter 11B, Section 11B-228.3.
Note: For EVCS signs, refer to Caltrans Traffic Operations Policy Directive 13-01 (Zero Emission Vehicle Signs and Pavement Markings) or its successor(s).

5.106.5.4 Electric Vehicle (EV) charging: medium-duty and heavy-duty. [N]
Construction shall comply with section 5.106.5.4.1 to facilitate future installation of electric vehicle supply equipment (EVSE). Construction for warehouses, grocery stores and retail stores with planned off-street loading spaces shall also comply with Section 5.106.5.4.1 for future installation of medium- and heavy-duty EVSE.
Exceptions:
1. On a case-by-case basis where the local enforcing agency has determined compliance with this section is not feasible based upon one of the following conditions:
   a. Where there is no local utility power supply.
   b. Where the local utility is unable to supply adequate power.
   c. Where there is evidence suitable to the local enforcing agency substantiating that additional local utility infrastructure design requirements, directly related to the implementation of Section 5.106.5.3, may adversely impact the construction cost of the project.

When EVSE(s) is/are installed, it shall be in accordance with the *California Building Code*, the *California Electrical Code* and as follows:

5.106.5.4.1 Electric vehicle charging readiness requirements for warehouse, grocery stores and retail stores with planned off-street loading spaces.
[N] In order to avoid future demolition when adding EV charging supply and distribution equipment, spare raceways(s) or busway(s) and adequate capacity for transformers(s), service panels(s) or subpanel(s) shall be installed at the time of construction in accordance with the California Electrical Code. Construction plans and specifications shall include but are not limited to, the following:
1. The transformer, main service equipment and subpanel shall meet the minimum power requirement in Table 5.106.5.4.1 to accommodate the dedicated branch circuits for the future installation of EVSE.
2. The construction documents shall indicate on or more location(s) convenient to the planned offstreet loading space(s) reserved for medium-and heavy-duty ZEV charging cabinets and charging dispensers, and a pathway reserved for routing of conduit from the termination of the raceway(s) or busway(s) to the charging cabinet(s) and dispenser(s) as shown in Table 5.106.5.4.1
3. Raceway(s) or busway(s) originating at a main service panel or a subpanel(s) serving the area where potential future medium-and heavy-duty EVSE will be located and shall terminate in close proximity to the potential future location of the charging equipments for medium- and heavy-duty vehicles.
4. The raceway(s) or busway(s) shall be sufficient size to carry the minimum additional system load to the future location of the charging for medium- and heavy-duty ZEVs as shown in Table 5.106.5.4.1.

TABLE 5.106.5.4.1 RACEWAY CONDUIT AND PANEL POWER REQUIREMENTS FOR MEDIUM- AND HEAVY-DUTY EVSE [N]

BUILDING TYPE	BUILDING SIZE (SQ. FT.)	NUMBER OF OFF-STREET LOADING SPACES	ADDITIONAL CAPACITY REQUIRED (KVA) FOR RACEWAY & BUSWAY AND TRANSFORMER & PANEL
Grocery	10,000 to 90,000	1 or 2	200
		3 or Greater	400
	Greater than 90,000	1 or Greater	400
Retail	10,000 to 135,000	1 or 2	200
		3 or Greater	400
	Greater than 135,000	1 or Greater	400
Warehouse	20,000 to 256,000	1 or 2	200
		3 or Greater	400
	Greater than 256,000	1 or Greater	400

5.106.8 LIGHT POLLUTION REDUCTION. [N]. I Outdoor lighting systems shall be designed and installed to comply with the following:

1. The minimum requirements in the California Energy Code for Lighting Zones 0-4 as defined in Chapter 10, Section 10-114 of the California Administrative Code; and
2. Backlight (B) ratings as defined in IES TM-15-11 (shown in Table A-1 in Chapter 8);
3. Uplight and Glare ratings as defined in California Energy Code (shown in Tables 130.2-A and 130.2-B in Chapter 8) and
4. Allowable BUG ratings not exceeding those shown in Table 5.106.8, [N] or Comply with a local ordinance lawfully enacted pursuant to Section 101.7, whichever is more stringent.

Exceptions: [N]

1. Luminaires that qualify as exceptions in Sections 130.2 (b) and 140.7 of the California Energy Code.
2. Emergency lighting.
3. Building facade meeting the requirements in Table 140.7-B of the California Energy Code, Part 6.
4. Custom lighting features as allowed by the local enforcing agency, as permitted by Section 101.8 Alternate materials, designs and methods of construction.
5. Luminaires with less than 6,200 initial luminaire lumens.

TABLE 5.106.8 [N] MAXIMUM ALLOWABLE BACKLIGHT, UPLIGHT AND GLARE (BUG) RATINGS [1,2]

ALLOWABLE RATING	LIGHTING ZONE LZ0	LIGHTING ZONE LZ1	LIGHTING ZONE LZ2	LIGHTING ZONE LZ3	LIGHTING ZONE LZ4
MAXIMUM ALLOWABLE BACKLIGHT RATING [3]					
Luminaire greater than 2 mounting heights (MH) from property line	N/A	No Limit	No Limit	No Limit	No Limit
Luminaire back hemisphere is 1-2 MH from property line	N/A	B2	B3	B4	B4
Luminaire back hemisphere is 0.5-1 MH from property line	N/A	B1	B2	B3	B3
Luminaire back hemisphere is less than 0.5 MH from property line	N/A	B0	B0	B1	B2
MAXIMUM ALLOWABLE UPLIGHT RATING (U)					
For area lighting [3]	N/A	U0	U0	U0	U0
For all other outdoor lighting,including decorative luminaires	N/A	U1	U2	U3	UR
MAXIMUM ALLOWABLE GLARE RATING [3] **(G)**					
MAXIMUM ALLOWABLE GLARE RATING [3] **(G)**	N/A	G1	G2	G3	G4
MAXIMUM ALLOWABLE GLARE RATING [3] **(G)**	N/A	G0	G1	G1	G2
MAXIMUM ALLOWABLE GLARE RATING [3] **(G)**	N/A	G0	G0	G1	G1
MAXIMUM ALLOWABLE GLARE RATING [3] **(G)**	N/A	G0	G0	G0	G1

1. IESNA Lighting Zones 0 and 5 are not applicable; refer to Lighting Zones as defined in the *California Energy Code* and Chapter 10 of the *California Administrative Code.*

2. For property lines that abut public walkways, bikeways, plazas and parking lots, the property line may be considered to be 5 feet beyond the actual property line for purpose of determining compliance with this section. For property lines that abut public roadways and public transit corridors, the property line may be considered to be the centerline of the public roadway or public transit corridor for the purpose of determining compliance with this section.

3. General lighting luminaires in areas such as outdoor parking, sales or storage lots shall meet these reduced ratings. Decorative luminaries located in these areas shall meet *U*-value limits for "all other outdoor lighting"

5.106.8.1 Facing- Backlight
Luminaries within 2MH of a property line shall be oriented so that the nearest property line is behind the fixture, and shall comply with the backlight rating specified in Table 5.106.8 based on the lighting zone and distance to the nearest point of that property line.
Exception: Corners. If two property lines (or two segments of the same property line) have equidistant point to the luminaire, then the luminaire may be oriented so that the intersection of the two lines (the corner) is directly behind the luminaire. The luminaire shall still use the distance to the nearest points(s) on the property lines to determine the required backlight rating.

5.106.8.2 Facing-Glare.
For luminaires covered by 5.106.8.1, if a property line also exists within or extends into the front hemisphere within 2MH of the luminaire then the luminaire shall comply with the more stringent glare rating specified in Table 5.106.8 based on the lighting zone and distance to the nearest point on the nearest property line within the front hemisphere.

Note: [N]
1.See also *California Building Code*, Chapter 12, Section 1205.6 for college campus lighting requirements for parking facilities and walkways.
2.Refer to Chapter 8 (Compliance Forms, Worksheets and Reference Material) for IES TM-15-11 Table A-1, *California Energy Code* Tables 130.2-A and 130.2-B.
3. Refer to the *California Building Code* for requirements for additions and alterations.

5.106.10 GRADING AND PAVING. Construction plans shall indicate how site grading or a drainage system will manage all surface water flows to keep water from entering buildings. Examples of methods to manage surface water include, but are not limited to, the following:

1. Swales.
2. Water collection and disposal systems.
3. French drains.
4. Water retention gardens.
5. Other water measures which keep surface water away from buildings and aid in groundwater recharge.
Exception: Additions and alterations not altering the drainage path.

5.106.12 SHADE TREES [DSA-SS]. Shade Trees shall be planted to comply with Sections 5.106.12.1, 5.106.12.2, and 5.106.12.3. Percentages shown shall be measured at noon on the summer solstice. Landscape irrigation necessary to establish and maintain tree health shall comply with Section 5.304.6.

5.106.12.1 Surface parking areas. Shade tree plantings, minimum #10 container size or equal, shall be installed to provide shade over 50 percent of the parking area within 15 years.

Exceptions: Surface parking area covered by solar photovoltaic shade structures with roofing materials that comply with Table A5.106.11.2.2 in Appendix A5 shall be permitted in whole or in part in lieu of shade tree planting.

5.106.12.2 Landscape areas. Shade tress plantings, minimum #10 container size or equal shall be installed to provide shade of 20% of the landscape area within 15 years.

Exceptions: Playfields for organized sport activity are not included in the total area calculation.

5.106.12.3. Hardscape areas. Shade tree plantings, minimum #10 container size or equal shall be installed to provide shade over 20 percent of the hardscape area within 15 years.

Exceptions:
1. Walks, hardscape areas covered by solar photovoltaic shade structures or shade structures with roofing materials that comply with Table A5.106.11.2.2 in Appendix A5 shall be permitted in whole or in part in lieu of shade tree planting.
2. Designated and marked play areas of organized sport activity are not included in the total area calculation.

DIVISION 5.2 ENERGY EFFICIENCY
SECTION 5.201 GENERAL
5.201.1 Scope [BSC-CG]. ***California Energy Code [DSA-SS].*** For the purposes of mandatory energy efficiency standards in this code, the California Energy Commission will continue to adopt mandatory building standards.

DIVISION 5.3 WATER EFFICIENCY AND CONSERVATION
SECTION 5.301 GENERAL
5.301.1 Scope. The provisions of this chapter shall establish the means of conserving water use indoors, outdoors and in wastewater conveyance.

SECTION 5.302 DEFINITIONS
5.302.1 Definitions. The following terms are defined in Chapter 2 *(and are included here for reference)*

EVAPOTRANSPIRATION ADJUSTMENT FACTOR (ETAF) [DSA-SS]. An adjustment factor when applied to reference evapotranspiration that adjusts for plant factors and irrigation efficiency, which ae two major influences on the amount of water that needs to be applied to the landscape.

FOOTPRINT AREA [DSA-SS]. The total area of the furthest exterior wall of the structure projected to natural grade, not including exterior areas such as stairs, covered walkways, patios and decks.

METERING FAUCET. A self-closing faucet that dispenses a specific volume of water for each actuation cycle. The volume or cycle duration can be fixed or adjustable.

GRAYWATER. Pursuant to Health and Safety Code Section 17922.12, "graywater" means untreated wastewater that has not been contaminated by any toilet discharge, has not been affected by infectious, contaminated, or unhealthy bodily wastes, and does not present a threat from contamination by unhealthful processing, manufacturing, or operating wastes. "Graywater" includes, but is not limited to wastewater from bathtubs, showers, bathroom washbasins, clothes washing machines and laundry tubs, but does not include waste water from kitchen sinks or dishwashers.

MODEL WATER EFFICIENT LANDSCAPE ORDINANCE (MWELO). The California ordinance regulating landscape design, installation and maintenance practices that will ensure commercial, multifamily and other developer installed landscapes greater than 2500 square feet meet an irrigation water budget developed based on landscaped area and climatological parameters.

MODEL WATER EFFICIENT LANDSCAPE ORDINANCE (MWELO). [HCD] The California model ordinance (California Code of Regulations, Title 23, Division 2, Chapter 2.7), regulating landscape design, installation and maintenance practices. Local agencies are required to adopt the updated MWELO, or adopt a local ordinance at least as effective as the MWELO.

POTABLE WATER. Water that is drinkable and meets the U.S. Environmental Protection Agency (EPA) Drinking Water Standards. See definition in the California Plumbing Code, Part 5.

POTABLE WATER. [HCD] Water that is satisfactory for drinking, culinary, and domestic purposes, and meets the U.S. Environmental Protection Agency (EPA) Drinking Water Standards and the requirements of the Health Authority Having Jurisdiction.

RECYCLED WATER. Water which, as a result of treatment of waste, is suitable for a direct beneficial use or a controlled use that would not otherwise occur [Water Code Section 13050 (n)]. Simply put, recycled water is water treated to remove waste matter attaining a quality that is suitable to use the water again.

SUBMETER. [HCD 1] A secondary device beyond a meter that measures water consumption of an individual rental unit within a multiunit residential structure or mixed-use residential and commercial structure. (See Civic Code Section 1954.202 (g) and Water code Section 517 for additional details.)

WATER BUDGET. Is the estimated total landscape irrigation water use which shall not exceed the maximum applied water allowance calculated in accordance with the Department of Water Resources Model Efficient Landscape Ordinance (MWELO).

APPROVAL
COUNCIL

DISCLAIMER: *THIS DOCUMENT IS PROVIDED AND INTENDED TO BE USED AS A MEANS TO INDICATE AREAS OF COMPLIANCE WITH THE CALIFORNIA GREEN BUILDING STANDARDS (CALGREEN) CODE. DUE TO THE VARIABLES BETWEEN BUILDING DEPARTMENT JURISDICTIONS, THIS CHECKLIST IS TO BE USED ON AN INDIVIDUAL PROJECT BASIS AND MAY BE MODIFIED BY THE END USER TO MEET THOSE INDIVIDUAL NEEDS. THE END USER ASSUMES ALL RESPONSIBILITY ASSOCIATED WITH THE USE OF THIS DOCUMENT, INCLUDING VERIFICATION WITH THE FULL CODE.*

FUHRMAN LEAMY
LAND GROUP
DESIGN • SERVICE • SOLUTIONS
3400 DOUGLAS BLVD., SUITE 275
ROSEVILLE, CALIFORNIA 95661
916.783.5263 • FLLANDGROUP.COM

JOB NO. : CRV- 25026

CITY OF ROSEVILLE APPROVAL

PROJECT:
JM-51PARK
7060 LAKEHAVEN DRIVE
ROSEVILLE, CA

CLIENT:
CITY OF ROSEVILLE

REVISIONS	DATE
△	
△	
△	
△	

ISSUE		DATE
1	1ST SUBMITTAL	9.19.2025
2	2ND SUBMITTAL	10.22.2025
3	3RD SUBMITTAL	12.03.2025
4	4TH SUBMITTAL	2.03.2026
5		

REGISTERED LANDSCAPE ARCHITECT
KEVIN C. LEAMY
No. 4965
12/31/26
2.01.2026
STATE OF CALIFORNIA

DRAWN : AM
CHECKED : KCL
SCALE. : AS SHOWN

SHEET TITLE:
CAL GREEN DOCUMENTATION

SHEET
CV-2.0A
2 OF 40 SHEETS

FOR REFERENCE ONLY FORM OR MANNER WHATSOEVER WITHOUT FIRST OBTAINING THE EXPRESS WRITTEN PERMISSION OF FUHRMAN LEAMY LAND GROUP NOR ARE THEY TO BE ASSIGNED TO ANY THIRD PARTY WITHOUT FIRST OBTAINING WRITTEN PERMISSION AND CONSENT.
FUHRMAN LEAMY LAND GROUP HEREBY EXPRESSLY RESERVES ITS COMMON LAW COPYRIGHT AND OTHER PROPERTY RIGHTS IN THESE PLANS. THESE PLANS AND DRAWINGS ARE NOT TO BE REPRODUCED, CHANGED OR COPIED IN ANY

AIA California

2022 CALIFORNIA GREEN BUILDING STANDARDS CODE

NONRESIDENTIAL MANDATORY MEASURES, SHEET 2 (January 2023)

Y = YES
N/A = NOT APPLICABLE
RESPON. PARTY = RESPONSIBLE PARTY (ie: ARCHITECT, ENGINEER, OWNER, CONTRACTOR, INSPECTOR ETC.)

Y	N/A	RESPON. PARTY

SECTION 5.303 INDOOR WATER USE

5.303.1 METERS. Separate submeters or metering devices shall be installed for the uses described in Sections 503.1.1 and 503.1.2.

5.303.1.1 Buildings in excess of 50,000 square feet. Separate submeters shall be installed as follows:

1. For each individual leased, rented or other tenant space within the building projected to consume more than 100 gal/day (380 L/day), including, but not limited to, spaces used for laundry or cleaners, restaurant or food service, medical or dental office, laboratory, or beauty salon or barber shop.
2. Where separate submeters for individual building tenants are unfeasible, for water supplied to the following subsystems:
   a. Makeup water for cooling towers where flow through is greater than 500 gpm (30 L/s).
   b. Makeup water for evaporative coolers greater than 6 gpm (0.04 L/s).
   c. Steam and hot water boilers with energy input more than 500,000 Btu/h (147 kW).

5.303.1.2 Excess consumption. A separate submeter or metering device shall be provided for any tenant within a new building or within an addition that is projected to consume more than 1,000 gal/day.

5.303.3 WATER CONSERVING PLUMBING FIXTURES AND FITTINGS. Plumbing fixtures (water closets and urinals) and fittings (faucets and showerheads) shall comply with the following:

5.303.3.1 Water Closets. The effective flush volume of all water closets shall not exceed 1.28 gallons per flush. Tank-type water closets shall be certified to the performance criteria of the U.S. EPA WaterSense Specification for Tank-Type toilets.

Note: The effective flush volume of dual flush toilets is defined as the composite, average flush volume of two reduced flushes and one full flush.

5.303.3.2 Urinals.

5.303.3.2.1 Wall-mounted Urinals. The effective flush volume of wall-mounted urinals shall not exceed 0.125 gallons per flush.

5.303.3.2.2 Floor-mounted Urinals. The effective flush volume of floor-mounted or other urinals shall not exceed 0.5 gallons per flush.

5.303.3.3 Showerheads. [BSC-CG]

5.303.3.3.1 Single showerhead. Showerheads shall have a maximum flow rate of not more than 1.8 gallons per minute at 80 psi. Showerheads shall be certified to the performance criteria of the U.S. EPA WaterSense Specification for Showerheads.

5.303.3.3.2 Multiple showerheads serving one shower. When a shower is served by more than one showerhead, the combined flow rate of all the showerheads and/or other shower outlets controlled by a single valve shall not exceed 1.8 gallons per minute at 80 psi, or the shower shall be designed to allow only one shower outlet to be in operation at a time.
Note: A hand-held shower shall be considered a showerhead.

5.303.3.4 Faucets and fountains.

5.303.3.4.1 Nonresidential Lavatory faucets. Lavatory faucets shall have a maximum flow rate of not more than 0.5 gallons per minute at 60 psi.

5.303.3.4.2 Kitchen faucets. Kitchen faucets shall have a maximum flow rate of not more than 1.8 gallons per minute at 60 psi. Kitchen faucets may temporarily increase the flow above the maximum rate, but not to exceed 2.2 gallons per minute at 60 psi, and must default to a maximum flow rate of 1.8 gallons per minute at 60 psi.

5.303.3.4.3 Wash fountains. Wash fountains shall have a maximum flow rate of not more than1.8 gallons per minute/20 [rim space (inches) at 60 psi].

5.303.3.4.4 Metering faucets. Metering faucets shall not deliver more than 0.20 gallons per cycle.

5.303.3.4.5 Metering faucets for wash fountains. Metering faucets for wash fountains shall have a maximum flow rate of not more than 0.20 gallons per minute/20 [rim space (inches) at 60 psi].

Note: Where complying faucets are unavailable, aerators or other means may be used to achieve reduction.

5.303.3.4.6 Pre-rinse spray value
When installed, shall meet the requirements in the *California Code of Regulations*, Title 20 (Appliance Efficiency Regulations), Section 1605.1 (h)(4) Table H-2, Section 1605.3 (h)(4)(A), and Section 1607 (d)(7), and shall be equipped with an integral automatic shutoff.

FOR REFERENCE ONLY: The following table and code section have been reprinted from the *California Code of Regulations*, Title 20 (Appliance Efficiency Regulations), Section 1605.1 (h)(4) and Section 1605.3 (h)(4)(A).

TABLE H-2

STANDARDS FOR COMMERCIAL PRE-RINSE SPRAY VALUES MANUFACTURED ON OR AFTER JANUARY 28, 2019

PRODUCT CLASS [spray force in ounce force (ozf)]	MAXIMUM FLOW RATE (gpm)
Product Class 1 (≤ 5.0 ozf)	1.00
Product Class 2 (> 5.0 ozf and ≤ 8.0 ozf)	1.20
Product Class 3 (> 8.0 ozf)	1.28

5.303.4 COMMERCIAL KITCHEN EQUIPMENT.

5.303.4.1 Food Waste Disposers. Disposers shall either modulate the use of water to no more than 1 gpm when the disposer is not in use (not actively grinding food waste/no-load) or shall automatically shut off after no more than 10 minutes of inactivity. Disposers shall use no more than 8 gpm of water.
Note: This code section does not affect local jurisdiction authority to prohibit or require disposer installation.

5.303.5 AREAS OF ADDITION OR ALTERATION. For those occupancies within the authority of the California Building Standards Commission as specified in Section 103, the provisions of Section 5.303.3 and 5.303.4 shall apply to new fixtures in additions or areas of alteration to the building.

5.303.6 STANDARDS FOR PLUMBING FIXTURES AND FITTINGS. Plumbing fixtures and fittings shall be installed in accordance with the *California Plumbing Code*, and shall meet the applicable standards referenced in Table 1701.1 of the *California Plumbing Code* and in Chapter 6 of this code.

SECTION 5.304 OUTDOOR WATER USE

5.304.1 OUTDOOR POTABLE WATER USE IN LANDSCAPE AREAS. Nonresidential developments shall comply with a local water efficient landscape ordinance or the current California Department of Water Resources' Model Water Efficient Landscape Ordinance (MWELO), whichever is more stringent.

Notes:
1. The Model Water Efficient Landscape Ordinance (MWELO) is located in the California Code of Regulations, Title 23, Chapter 2.7, Division 2.
2. MWELO and supporting documents, including a water budget calculator, are available at: https://www.water.ca.gov/.

5.304.6 OUTDOOR POTABLE WATER USE IN LANDSCAPE AREAS. For public schools and community colleges, landscape projects as described in Sections 5.304.6.1 and 5.304.6.2 shall comply with the California Department of Water Resources Model Water Efficient Landscape Ordinance (MWELO) commencing with Section 490 of Chapter 2.7, Division 2, Title 23, *California Code of Regulations*, except that the evapotranspiration adjustment factor (ETAF) shall be 0.65 with an additional water allowance for special landscape areas (SLA) of 0.35.

Exception: Any project with an aggregate landscape area of 2,500 square feet or less may comply with the prescriptive measures contained in Appendix D of the MWELO.

5.304.6.1 Newly constructed landscapes. New construction projects with an aggregate landscape area equal to or greater than 500 square feet.

5.304.6.2 Rehabilitated landscapes. Rehabilitated landscape projects with an aggregate landscape area equal to or greater than 1,200 square feet.

DIVISION 5.4 MATERIAL CONSERVATION AND RESOURCE EFFICIENCY

SECTION 5.401 GENERAL

5.401.1 SCOPE. The provisions of this chapter shall outline means of achieving material conservation and resource efficiency through protection of buildings from exterior moisture, construction waste diversion, employment of techniques to reduce pollution through recycling of materials, and building commissioning or testing and adjusting.

SECTION 5.402 DEFINITIONS

5.402.1 DEFINITIONS. The following terms are defined in Chapter 2 *(and are included here for reference)*

ADJUST. To regulate fluid flow rate and air patterns at the terminal equipment, such as to reduce fan speed or adjust a damper.

BALANCE. To proportion flows within the distribution system, including sub-mains, branches and terminals, according to design quantities.

BUILDING COMMISSIONING. A systematic quality assurance process that spans the entire design and construction process, including verifying and documenting that building systems and components are planned, designed, installed, tested, operated and maintained to meet the owner's project requirements.

ORGANIC WASTE. Food waste, green waste, landscape and pruning wste, nonhazardous wood waste, and food soiled paper waste that is mixed in with food waste.

TEST. A procedure to determine quantitative performance of a system or equipment

SECTION 5.407 WATER RESISTANCE AND MOISTURE MANAGEMENT

5.407.1 WEATHER PROTECTION. Provide a weather-resistant exterior wall and foundation envelope as required by California Building Code Section 1402.2 (Weather Protection), manufacturer's installation instructions or local ordinance, whichever is more stringent.

5.407.2 MOISTURE CONTROL. Employ moisture control measures by the following methods.

5.407.2.1 Sprinklers. Design and maintain landscape irrigation systems to prevent spray on structures.

5.407.2.2 Entries and openings. Design exterior entries and/or openings subject to foot traffic or wind-driven rain to prevent water intrusion into buildings as follows:

5.407.2.2.1 Exterior door protection. Primary exterior entries shall be covered to prevent water intrusion by using nonabsorbent floor and wall finishes within at least 2 feet around and perpendicular to such openings plus at least one of the following:

1. An installed awning at least 4 feet in depth.
2. The door is protected by a roof overhang at least 4 feet in depth.
3. The door is recessed at least 4 feet.
4. Other methods which provide equivalent protection.

5.407.2.2.2 Flashing. Install flashings integrated with a drainage plane.

SECTION 5.408 CONSTRUCTION WASTE REDUCTION, DISPOSAL AND RECYCLING

5.408.1 CONSTRUCTION WASTE MANAGEMENT. Recycle and/or salvage for reuse a minimum of 65% of the non-hazardous construction and demolition waste in accordance with Section 5.408.1.1, 5.408.1.2 or 5.408.1.3; or meet a local construction and demolition waste management ordinance, whichever is more stringent.

5.408.1.1 Construction waste management plan. Where a local jurisdiction does not have a construction and demolition waste management ordinance, submit a construction waste management plan that:

1. Identifies the construction and demolition waste materials to be diverted from disposal by efficient usage, recycling, reuse on the project or salvage for future use or sale.
2. Determines if construction and demolition waste materials will be sorted on-site (source-separated) or bulk mixed (single stream).
3. Identifies diversion facilities where construction and demolition waste material collected will be taken.
4. Specifies that the amount of construction and demolition waste materials diverted shall be calculated by weight or volume, but not by both.

5.408.1.2 Waste Management Company. Utilize a waste management company that can provide verifiable documentation that the percentage of construction and demolition waste material diverted from the landfill complies with this section.

Note: The owner or contractor shall make the determination if the construction and demolition waste material will be diverted by a waste management company.

Exceptions to Sections 5.408.1.1 and 5.408.1.2:

1. Excavated soil and land-clearing debris.
2. Alternate waste reduction methods developed by working with local agencies if diversion or recycle facilities capable of compliance with this item do not exist.
3. Demolition waste meeting local ordinance or calculated in consideration of local recycling facilities and markets.

5.408.1.3 Waste stream reduction alternative. The combined weight of new construction disposal that does not exceed two pounds per square foot of building area may be deemed to meet the 65% minimum requirement as approved by the enforcing agency.

5.408.1.4 Documentation. Documentation shall be provided to the enforcing agency which demonstrates compliance with Sections 5.408.1.1, through 5.408.1.3. The waste management plan shall be updated as necessary and shall be accessible during construction for examination by the enforcing agency.

Notes:

1. Sample forms found in "A Guide to the California Green Building Standards Code (Nonresidential)" located www.dgs.ca.gov/BSC/Resources/Page-Content/Building-Standards-Commission-Resources-List-Folder/CALGreen may be used to assist in documenting compliance with the waste management plan.
2. Mixed construction and demolition debris processors can be located at the California Department of Resources Recycling and Recovery (CalRecycle).

5.408.2 UNIVERSAL WASTE. [A] Additions and alterations to a building or tenant space that meet the scoping provisions in Section 301.3 for nonresidential additions and alterations, shall require verification that Universal Waste items such as fluorescent lamps and ballast and mercury containing thermostats as well as other California prohibited Universal Waste materials are disposed of properly and are diverted from landfills. A list of prohibited Universal Waste materials shall be included in the construction documents.

Note: Refer to the Universal Waste Rule,link at: http://www.dtsc.ca.gov/universalwaste/

5.408.3 EXCAVATED SOIL AND LAND CLEARING DEBRIS. 100 percent of trees, stumps, rocks and associated vegetation and soils resulting primarily from land clearing shall be reused or recycled. For a phased project, such material may be stockpiled on site until the storage site is developed.

Exception: Reuse, either on or off-site, of vegetation or soil contaminated by disease or pest infestation.

Notes:

1. If contamination by disease or pest infestation is suspected, contact the County Agricultural Commissioner and follow its direction for recycling or disposal of the material.
2. For a map of know pest and/or disease quarantine zones, consult with the California Department of Food and Agriculture. (www.cdfa.ca.gov)

SECTION 5.410 BUILDING MAINTENANCE AND OPERATIONS

5.410.1 RECYCLING BY OCCUPANTS. Provide readily accessible areas that serve the entire building and are identified for the depositing, storage and collection of non-hazardous materials for recycling, including (at a minimum) paper, corrugated cardboard, glass, plastics, organic waste, and metals or meet a lawfully enacted local recycling ordinance, if more restrictive.

Exception: Rural jurisdictions that meet and apply for the exemption in Public Resources Code 42649.82 (a)(2)(A) et seq. shall also be exempt from the organic waste portion of this section.

5.410.1.1 Additions. All additions conducted within a 12-month period under single or multiple permits, resulting in an increase of 30% or more in floor area, shall provide recycling areas on site.

Exception: Additions within a tenant space resulting in less than a 30% increase in the tenant space floor area.

5.410.1.2 Sample ordinance. Space allocation for recycling areas shall comply with Chapter 18, Part 3, Division 30 of the *Public Resources Code*. Chapter 18 is known as the California Solid Waste Reuse and Recycling Access Act of 1991 (Act).

Note: A sample ordinance for use by local agencies may be found in Appendix A of the document at the CalRecycle's web site.

5.410.2 COMMISSIONING. [N] New buildings 10,000 square feet and over. For new buildings 10,000 square feet and over, building commissioning shall be included in the design and construction processes of the building project to verify that the building systems and components meet the owner's or owner representative's project requirements. Commissioning shall be performed in accordance with this section by trained personnel with experience on projects of comparable size and complexity. For I-occupancies that are not regulated by OSHPD or for I-occupancies and L-occupancies that are not regulated y the California Energy Code Section 100.0 Scope, all requirements in Sections 5.410.2 through 5.410.2.6 shall apply.

Note: For energy-related systems under the scope (Section 100) of the California Energy Code, including heating, ventilation, air conditioning (HVAC) systems and controls, indoor lighting systems and controls, as well as water heating systems and controls, refer to California Energy Code Section 120.8 for commissioning requirements

Commissioning requirements shall include:

1. Owner's or Owner representative's project requirements.
2. Basis of design.
3. Commissioning measures shown in the construction documents.
4. Commissioning plan.
5. Functional performance testing.
6. Documentation and training.
7. Commissioning report.

Exceptions:

1. Unconditioned warehouses of any size.
2. Areas less than 10,000 square feet used for offices or other conditioned accessory spaces within unconditioned warehouses.
3. Tenant improvements less than 10,000 square feet as described in Section 303.1.1.
4. Open parking garages of any size, or open parking garage areas, of any size, within a structure.

Note: For the purposes of this section, unconditioned shall mean a building, area, or room which does not provide heating and or air conditioning.

Informational Notes:

1. IAS AC 476 is an accreditation criteria for organizations providing training and/or certification of commissioning personnel. AC 476 is available to the Authority Having Jurisdiction as a reference for qualifications of commissioning personnel. AC 476 does not certify individuals to conduct functional performance tests or to adjust and balance systems.
2. Functional performance testing for heating, ventilation, air conditioning systems and lighting controls must be performed in compliance with the *California Energy Code*.

5.410.2.1 Owner's or Owner Representative's Project Requirements (OPR). [N] The expectations and requirements of the building appropriate to its phase shall be documented before the design phase of the project begins. This documentation shall include the following:

1. Environmental and sustainability goals.
2. Building sustainable goals.
3. Indoor environmental quality requirements.
4. Project program, including facility functions and hours of operation, and need for after hours operation.
5. Equipment and systems expectations.
6. Building occupant and operation and maintenance (O&M) personnel expectations.

5.410.2.2 Basis of Design (BOD). [N] A written explanation of how the design of the building systems meets the OPR shall be completed at the design phase of the building project. The Basis of Design document shall cover the following systems:

1. Renewable energy systems.
2. Landscape irrigation systems.
3. Water reuse system.

5.410.2.3 Commissioning plan. [N] Prior to permit issuance a commissioning plan shall be completed to document how the project will be commissioned. The commissioning plan shall include the following:

1. General project information.
2. Commissioning goals.
3. Systems to be commissioned. Plans to test systems and components shall include:
   a. An explanation of the original design intent.
   b. Equipment and systems to be tested, including the extent of tests.
   c. Functions to be tested.
   d. Conditions under which the test shall be performed.
   e. Measurable criteria for acceptable performance.
4. Commissioning team information.
5. Commissioning process activities, schedules and responsibilities. Plans for the completion of commissioning shall be included.

5.410.2.4 Functional performance testing. [N] Functional performance tests shall demonstrate the correct installation and operation of each component, system and system-to-system interface in accordance with the approved plans and specifications. Functional performance testing reports shall contain information addressing each of the building components tested, the testing methods utilized, and include any readings and adjustments made.

5.410.2.5 Documentation and training. [N] A Systems Manual and Systems Operations Training are required, including Occupational Safety and Health Act (OSHA) requirements in *California Code of Regulations* (CCR), Title 8, Section 5142, and other related regulations.

5.410.2.5.1 Systems manual. [N] Documentation of the operational aspects of the building shall be completed within the systems manual and delivered to the building owner or representative. The systems manual shall include the following:

1. Site information, including facility description, history and current requirements.
2. Site contact information.
3. Basic operations and maintenance, including general site operating procedures, basic troubleshooting, recommended maintenance requirements, site events log.
4. Major systems.
5. Site equipment inventory and maintenance notes.
6. A copy of verifications required by the enforcing agency or this code.
7. Other resources and documentation, if applicable.

5.410.2.5.2 Systems operations training. [N] A program for training of the appropriate maintenance staff for each equipment type and/or system shall be developed and documented in the commissioning report and shall include the following:

1. System/equipment overview (what it is, what it does and with what other systems and/or equipment it interfaces).
2. Review and demonstration of servicing/preventive maintenance.
3. Review of the information in the Systems Manual.
4. Review of the record drawings on the system/equipment.

5.410.2.6 Commissioning report. [N] A report of commissioning process activities undertaken through the design and construction phases of the building project shall be completed and provided to the owner or representative.

5.410.4 TESTING AND ADJUSTING. New buildings less than 10,000 square feet. Testing and adjusting of systems shall be required for new buildings less than 10,000 square feet or new systems to serve an addition or alteration subject to Section 303.1.

5.410.4.2 (Reserved)

Note: For energy-related systems under the scope (Section 100) of the California Energy Code, including heating, ventilation, air conditioning (HVAC) systems and controls, indoor lighting system and controls, as well as water heating systems and controls, refer to California Energy Code Section 120.8 for commissioning requirements and Sections 120.5, 120.6, 130.4, and 140.9(b)3 for additional testing requirements of specific systems.

5.410.4.2 Systems. Develop a written plan of procedures for testing and adjusting systems. Systems to be included for testing and adjusting shall include at a minimum, as applicable to the project:

1. Renewable energy systems.
2. Landscape irrigation systems.
3. Water reuse systems.

5.410.4.3 Procedures. Perform testing and adjusting procedures in accordance with manufacturer's specifications and applicable standards on each system.

5.410.4.3.1 HVAC balancing. In addition to testing and adjusting, before a new space-conditioning system serving a building or space is operated for normal use, the system shall be balanced in accordance with the procedures defined by the Testing Adjusting and Balancing Bureau National Standards; the National Environmental Balancing Bureau Procedural Standards; Associated Air Balance Council National Standards or as approved by the enforcing agency.

5.410.4.4 Reporting. After completion of testing, adjusting and balancing, provide a final report of testing signed by the individual responsible for performing these services.

5.410.4.5 Operation and maintenance (O & M) manual. Provide the building owner or representative with detailed operating and maintenance instructions and copies of guarantees/warranties for each system. O & M instructions shall be consistent with OSHA requirements in CCR, Title 8, Section 5142, and other related regulations.

5.410.4.5.1 Inspections and reports. Include a copy of all inspection verifications and reports required by the enforcing agency.

DIVISION 5.5 ENVIRONMENTAL QUALITY

SECTION 5.501 GENERAL

5.501.1 SCOPE. The provisions of this chapter shall outline means of reducing the quantity of air contaminants that are odorous, irritating, and/or harmful to the comfort and well-being of a building's installers, occupants and neighbors.

SECTION 5.502 DEFINITIONS

5.502.1 DEFINITIONS. The following terms are defined in Chapter 2 *(and are included here for reference)*

ARTERIAL HIGHWAY. A general term denoting a highway primarily for through traffic usually on a continuous route.

A-WEIGHTED SOUND LEVEL (dBA). The sound pressure level in decibels as measured on a sound level meter using the internationally standardized A-weighting filter or as computed from sound spectral data to which A-weighting adjustments have been made.

1 BTU/HOUR. British thermal units per hour, also referred to as Btu. The amount of heat required to raise one pound of water one degree Fahrenheit per hour, a common measure of heat transfer rate. A ton of refrigeration is 12,000 Btu, the amount of heat required to melt a ton (2,000 pounds) of ice at 32^0 Fahrenheit.

COMMUNITY NOISE EQUIVALENT LEVEL (CNEL). A metric similar to the day-night average sound level (Ldn), except that a 5 decibel adjustment is added to the equivalent continuous sound exposure level for evening hours (7pm to 10pm) in addition to the 10 dB nighttime adjustment used in the Ldn.

COMPOSITE WOOD PRODUCTS. Composite wood products include hardwood plywood, particleboard and medium density fiberboard. "Composite wood products" does not include hardboard, structural plywood, structural panels, structural composite lumber, oriented strand board, glued laminated timber, timber, prefabricated wood I-joists or finger-jointed lumber, all as specified in California Code of Regulations (CCR), Title 17, Section 93120.1(a).

Note: See CCR, Title 17, Section 93120.1.

DAY-NIGHT AVERAGE SOUND LEVEL (Ldn). The A-weighted equivalent continuous sound exposure level for a 24-hour period with a 10 dB adjustment added to sound levels occurring during nighttime hours (10p.m. to 7 a.m.).

DECIBEL (db). A measure on a logarithmic scale of the magnitude of a particular quantity (such as sound pressure, sound power, sound intensity) with respect to a reference quantity.

ELECTRIC VEHICLE (EV). An automotive-type vehicle for *on-road* use, such as passenger automobiles, buses, trucks, vans, neighborhood electric vehicles, electric motorcycles, and the like, primarily powered by an electric motor that draws current from a rechargeable storage battery, fuel cell, photovoltaic array, or other source of electric current. Plug-in hybrid electric vehicles (PHEV) are considered electric vehicles. For purposes of the *California Electrical Code*, off-road, self-propelled electric vehicles, such as industrial trucks, hoists, lifts, transports, golf carts, airline ground support equipment, tractors, boats, and the like, are not included.

ELECTRIC VEHICLE CHARGING STATION(S) (EVCS)j. One or more spaces intended for charging electric vehicles.

ELECTRIC VEHICLE SUPPLY EQUIPMENT (EVSE). The conductors, including the ungrounded, grounded, and equipment grounding conductors and the electric vehicle connectors, attachment plugs, and all other fittings, devices, power outlets, or apparatus installed specifically for the purpose of transferring energy between the premises wiring and the electric vehicle.

ENERGY EQUIVALENT (NOISE) LEVEL (Leq). The level of a steady noise which would have the same energy as the fluctuating noise level integrated over the time of period of interest.

EXPRESSWAY. An arterial highway for through traffic which may have partial control of access, but which may or may not be divided or have grade separations at intersections.

FREEWAY. A divided arterial highway with full control of access and with grade separations at intersections.

GLOBAL WARMING POTENTIAL (GWP). The radiative forcing impact of one mass-based unit of a given greenhouse gas relative to an equivalent unit of carbon dioxide over a given period of time. Carbon dioxide is the reference compound with a GWP of one.

GLOBAL WARMING POTENTIAL VALUE (GWP VALUE). A 100-year GWP value published by the Intergovernmental Panel on Climate Change (IPCC) in either its Second Assessment Report (SAR) (IPCC, 1995); or its Fourth Assessment A-3 Report (AR4) (IPCC, 2007). The SAR GWP values are found in column "SAR (100-yr)" of Table 2.14.; the AR4 GWP values are found in column "100 yr" of Table 2.14.

HIGH-GWP REFRIGERANT. A compound used as a heat transfer fluid or gas that is: (a) a chlorofluorocarbon, a hdrochlorofluorocarbon, a hydrofluorocarbon, a perfluorocarbon, or any compound or blend of compounds, with a GWP value equal to or greater than 150, or (B) any ozone depleting substance as defined in Title 40 of the Code of Federal Regulations, Part 82, sec.82.3 (as amended March 10, 2009).

LONG RADIUS ELBOW. Pipe fitting installed between two lengths of pipe or tubing to allow a change of direction, with a radius 1.5 times the pipe diameter.

LOW-GWP REFRIGERANT. A compound used as a heat transfer fluid or gas that: (A) has a GWP value less than 150, and (B) is not an ozone depleting substance as defined in Title 40 of the Code of Federal Regulations, Part 82, sec.82.3 (as amended March 10, 2009).

MERV. Filter minimum efficiency reporting value, based on ASHRAE 52.2–1999.

MAXIMUM INCREMENTAL REACTIVITY (MIR). The maximum change in weight of ozone formed by adding a compound to the "Base REactive Organic Gas (ROG) Mixture" per weight of compound added, expressed to hundreths of a gram (g O^3/g ROC).

PRODUCT-WEIGHTED MIR (PWMIR). The sum of all weighted-MIR for all ingredients in a product subject to this article. The PWMIR is the total product reactivity expressed to hundredths of a gram of ozone formed per gram of product (excluding container and packaging).

PSIG. Pounds per square inch, guage.

REACTIVE ORGANIC COMPOUND (ROC). Any compound that has the potential, once emitted, to contribute to ozone formation in the troposphere.

SCHRADER ACCESS VALVES. Access fittings with a valve core installed.

SHORT RADIUS ELBOW. Pipe fitting installed between two lengths of pipe or tubing to allow a change of direction, with a radius 1.0 times the pipe diameter.

SUPERMARKET. For the purposes of Section 5.508.2, a supermarket is any retail food facility with 8,000 square feet or more conditioned area, and that utilizes either refrigerated display cases, or walk-in coolers or freezers connected to remote compressor units or condensing units.

VOC. A volatile organic compound broadly defined as a chemical compound based on carbon chains or rings with vapor pressures greater than 0.1 millimeters of mercury at room temperature. These compounds typically contain hydrogen and may contain oxygen, nitrogen and other elements. See CCR Title 17, Section 94508(a)

Note: Where specific regulations are cited from different agencies such as SCAQMD, ARB, etc., the VOC definition included in that specific regulation is the one that prevails for the specific measure in question.

SECTION 5.503 FIREPLACES

5.503.1 FIREPLACES. Install only a direct-vent sealed-combustion gas or sealed wood-burning fireplace, or a sealed woodstove or pellet stove, and refer to residential requirements in the California Energy Code, Title 24, Part 6, Subchapter 7, Section 150. Woodstoves, pellet stoves and fireplaces shall comply with applicable local ordinances.

5.503.1.1 Woodstoves. Woodstoves and pellet stoves shall comply with U.S. EPA New Source Performance Standards (NSPS) emission limits as applicable, and shall have a permanent label indicating they are certified to meet the emission limits.

SECTION 5.504 POLLUTANT CONTROL

5.504.1 TEMPORARY VENTILATION. The permanent HVAC system shall only be used during construction if necessary to condition the building or areas of addition or alteration within the required temperature range for material and equipment installation. If the HVAC system is used during construction, use return air filters with a Minimum Efficiency Reporting Value (MERV) of 8, based on ASHRAE 52.2-1999, or an average efficiency of 30% based on ASHRAE 52.1-1992 Replace all filters immediately prior to occupancy, or, if the building is occupied during alteration, at the conclusion of construction.

5.504.3 Covering of duct openings and protection of mechanical equipment during construction. At the time of rough installation and during storage on the construction site until final startup of the heating, cooling and ventilation equipment, all duct and other related air distribution component openings shall be covered with tape, plastic, sheetmetal or other methods acceptable to the enforcing agency to reduce the amount of dust, water and debris which may enter the system.

APPROVAL ONLY
BOC COUNCIL AP

FUHRMAN LEAMY
LAND GROUP
DESIGN • SERVICE • SOLUTIONS
3400 DOUGLAS BLVD., SUITE 275
ROSEVILLE, CALIFORNIA 95661
916.783.5263 • FLLANDGROUP.COM

JOB NO. : CRV- 25026

CITY OF ROSEVILLE APPROVAL

PROJECT:
JM-51PARK

7060 LAKEHAVEN DRIVE
ROSEVILLE, CA

CLIENT:
CITY OF ROSEVILLE

REVISIONS DATE

ISSUE		DATE
1	1ST SUBMITTAL	9.19.2025
2	2ND SUBMITTAL	10.22.2025
3	3RD SUBMITTAL	12.03.2025
4	4TH SUBMITTAL	2.03.2026
5		

REGISTERED LANDSCAPE ARCHITECT
KEVIN C. LEAMY
No. 4965
12/31/26
2.01.2026
STATE OF CALIFORNIA

DRAWN : AM
CHECKED : KCL
SCALE : AS SHOWN

SHEET TITLE:
CAL GREEN DOCUMENTATION

SHEET
CV-2.0B
3 OF 40 SHEETS

DISCLAIMER:THIS DOCUMENT IS PROVIDED AND INTENDED TO BE USED AS A MEANS TO INDICATE AREAS OF COMPLIANCE WITH THE CALIFORNIA GREEN BUILDING STANDARDS (CALGREEN) CODE. DUE TO THE VARIABLES BETWEEN BUILDING DEPARTMENT JURISDICTIONS, THIS CHECKLIST IS TO BE USED ON AN INDIVIDUAL PROJECT BASIS AND MAY BE MODIFIED BY THE END USER TO MEET THOSE INDIVIDUAL NEEDS. THE END USER ASSUMES ALL RESPONSIBILITY ASSOCIATED WITH THE USE OF THIS DOCUMENT, INCLUDING VERIFICATION WITH THE FULL CODE.

FUHRMAN LEAMY LAND GROUP HEREBY EXPRESLY RESERVES ITS COMMON LAW COPYRIGHT AND OTHER PROPERTY RIGHTS IN THESE PLANS. THESE PLANS AND DRAWINGS ARE NOT TO BE REPRODUCED, CHANGED OR COPIED IN ANY FORM OR MANNER WHATSOEVER WITHOUT FIRST OBTAINING THE EXPRESS WRITTEN PERMISSION OF FUHRMAN LEAMY LAND GROUP NOR ARE THEY TO BE ASSIGNED TO ANY THIRD PARTY WITHOUT FIRST OBTAINING WRITTEN PERMISSION AND CONSENT.

2022 CALIFORNIA GREEN BUILDING STANDARDS CODE

NONRESIDENTIAL MANDATORY MEASURES, SHEET 3 (January 2023)

Y = YES
N/A = NOT APPLICABLE
RESPON. PARTY = RESPONSIBLE PARTY (ie: ARCHITECT, ENGINEER, OWNER, CONTRACTOR, INSPECTOR ETC.)

5.504.4 FINISH MATERIAL POLLUTANT CONTROL. Finish materials shall comply with Sections 5.504.4.1 through 5.504.4.6.

5.504.4.1 Adhesives, sealants and caulks. Adhesives, sealants, and caulks used on the project shall meet the requirements of the following standards:
1. Adhesives, adhesive bonding primers, adhesive primers, sealants, sealant primers and caulks shall comply with local or regional air pollution control or air quality management district rules where applicable, or SCAQMD Rule 1168 VOC limits, as shown in Tables 5.504.4.1 and 5.504.4.2. Such products also shall comply with the Rule 1168 prohibition on the use of certain toxic compounds (chloroform, ethylene dichloride, methylene chloride, perchloroethylene and trichloroethylene), except for aerosol products as specified in subsection 2, below.

2. Aerosol adhesives, and smaller unit sizes of adhesives, and sealant or caulking compounds (in units of product, less packaging, which do not weigh more than one pound and do not consist of more than 16 fluid ounces) shall comply with statewide VOC standards and other requirements, including prohibitions on use of certain toxic compounds, of *California Code of Regulations*, Title 17, commencing with Section 94507.

TABLE 5.504.4.1 - ADHESIVE VOC LIMIT[1,2]

Less Water and Less Exempt Compounds in Grams per Liter

ARCHITECTURAL APPLICATIONS	CURRENT VOC LIMIT
INDOOR CARPET ADHESIVES	50
CARPET PAD ADHESIVES	50
OUTDOOR CARPET ADHESIVES	150
WOOD FLOORING ADHESIVES	100
RUBBER FLOOR ADHESIVES	60
SUBFLOOR ADHESIVES	50
CERAMIC TILE ADHESIVES	65
VCT & ASPHALT TILE ADHESIVES	50
DRYWALL & PANEL ADHESIVES	50
COVE BASE ADHESIVES	50
MULTIPURPOSE CONSTRUCTION ADHESIVES	70
STRUCTURAL GLAZING ADHESIVES	100
SINGLE-PLY ROOF MEMBRANE ADHESIVES	250
OTHER ADHESIVES NOT SPECIFICALLY LISTED	50
SPECIALTY APPLICATIONS	
PVC WELDING	510
CPVC WELDING	490
ABS WELDING	325
PLASTIC CEMENT WELDING	250
ADHESIVE PRIMER FOR PLASTIC	550
CONTACT ADHESIVE	80
SPECIAL PURPOSE CONTACT ADHESIVE	250
STRUCTURAL WOOD MEMBER ADHESIVE	140
TOP & TRIM ADHESIVE	250
SUBSTRATE SPECIFIC APPLICATIONS	
METAL TO METAL	30
PLASTIC FOAMS	50
POROUS MATERIAL (EXCEPT WOOD)	50
WOOD	30
FIBERGLASS	80

1. IF AN ADHESIVE IS USED TO BOND DISSIMILAR SUBSTRATES TOGETHER, THE ADHESIVE WITH THE HIGHEST VOC CONTENT SHALL BE ALLOWED.

2. FOR ADDITIONAL INFORMATION REGARDING METHODS TO MEASURE THE VOC CONTENT SPECIFIED IN THIS TABLE, SEE SOUTH COAST AIR QUALITY MANAGEMENT DISTRICT RULE 1168, www.arb.ca.gov/DRDB/SC/CURHTML/R1168.PDF

TABLE 5.504.4.2 - SEALANT VOC LIMIT

Less Water and Less Exempt Compounds in Grams per Liter

SEALANTS	CURRENT VOC LIMIT
ARCHITECTURAL	250
MARINE DECK	760
NONMEMBRANE ROOF	300
ROADWAY	250
SINGLE-PLY ROOF MEMBRANE	450
OTHER	420
SEALANT PRIMERS	
ARCHITECTURAL	
NONPOROUS	250
POROUS	775
MODIFIED BITUMINOUS	500
MARINE DECK	760
OTHER	750

NOTE: FOR ADDITIONAL INFORMATION REGARDING METHODS TO MEASURE THE VOC CONTENT SPECIFIED IN THESE TABLES, SEE SOUTH COAST AIR QUALITY MANAGEMENT DISTRICT RULE 1168.

5.504.4.3 Paints and coatings. Architectural paints and coatings shall comply with VOC limits in Table 1 of the ARB Architectural Coatings Suggested Control Measure, as shown in Table 5.504.4.3, unless more stringent local limits apply. The VOC content limit for coatings that do not meet the definitions for the specialty coatings categories listed in Table 5.504.4.3 shall be determined by classifying the coating as a Flat, Nonflat or Nonflat-High Gloss coating, based on its gloss, as defined in Subsections 4.21, 4.36 and 4.37 of the 2007 California Air Resources Board Suggested Control Measure, and the corresponding Flat, Nonflat or Nonflat-High Gloss VOC limit in Table 5.504.4.3 shall apply.

5.504.4.3.1 Aerosol Paints and coatings. Aerosol paints and coatings shall meet the PWMIR Limits for ROC in Section 94522(a)(3) and other requirements, including prohibitions on use of certain toxic compounds and ozone depleting substances, in Sections 94522(c)(2) and (d)(2) of *California Code of Regulations*, Title 17, commencing with Section 94520; and in areas under the jurisdiction of the Bay Area Air Quality Management District additionally comply with the percent VOC by weight of product limits of Regulation 8 Rule 49.

TABLE 5.504.4.3 - CONT.

GRAMS OF VOC PER LITER OF COATING, LESS WATER & LESS EXEMPT COMPOUNDS

COATING CATEGORY	CURRENT VOC LIMIT
SPECIALTY COATINGS	
ALUMINUM ROOF COATINGS	400
BASEMENT SPECIALTY COATINGS	400
BITUMINOUS ROOF COATINGS	50
BITUMINOUS ROOF PRIMERS	350
BOND BREAKERS	350
CONCRETE CURING COMPOUNDS	350
CONCRETE/MASONRY SEALERS	100
DRIVEWAY SEALERS	50
DRY FOG COATINGS	150
FAUX FINISHING COATINGS	350
FIRE RESISTIVE COATINGS	350
FLOOR COATINGS	100
FORM-RELEASE COMPOUNDS	250
GRAPHIC ARTS COATINGS (SIGN PAINTS)	500
HIGH-TEMPERATURE COATINGS	420
INDUSTRIAL MAINTENANCE COATINGS	250
LOW SOLIDS COATINGS[3]	120
MAGNESITE CEMENT COATINGS	450
MASTIC TEXTURE COATINGS	100
METALLIC PIGMENTED COATINGS	500
MULTICOLOR COATINGS	250
PRETREATMENT WASH PRIMERS	420
PRIMERS, SEALERS, & UNDERCOATERS	100
REACTIVE PENETRATING SEALERS	350
RECYCLED COATINGS	250
ROOF COATINGS	50
RUST PREVENTATIVE COATINGS	250
SHELLACS:	
CLEAR	730
OPAQUE	550
SPECIALTY PRIMERS, SEALERS & UNDERCOATERS	100
STAINS	250
STONE CONSOLIDANTS	450
SWIMMING POOL COATINGS	340
TRAFFIC MARKING COATINGS	100
TUB & TILE REFINISH COATINGS	420
WATERPROOFING MEMBRANES	250
WOOD COATINGS	275
WOOD PRESERVATIVES	350
ZINC-RICH PRIMERS	340

1. GRAMS OF VOC PER LITER OF COATING, INCLUDING WATER & EXEMPT COMPOUNDS

2. THE SPECIFIED LIMITS REMAIN IN EFFECT UNLESS REVISED LIMITS ARE LISTED IN SUBSEQUENT COLUMNS IN THE TABLE.

3. VALUES IN THIS TABLE ARE DERIVED FROM THOSE SPECIFIED BY THE CALIFORNIA AIR RESOURCES BOARD, ARCHITECTURAL COATINGS SUGGESTED CONTROL MEASURE, FEB. 1, 2008. MORE INFORMATION IS AVAILABLE FROM THE AIR RESOURCES BOARD.

5.504.4.3.2 Verification. Verification of compliance with this section shall be provided at the request of the enforcing agency. Documentation may include, but is not limited to, the following:
1. Manufacturer's product specification
2. Field verification of on-site product containers

5.504.4.4 Carpet Systems.
All carpet installed in the building interior shall meet the requirements of the California Department of Public Health, "Standard Method for the Testing and Evaluation of Volatile Organic Chemical Emissions from Indoor Sources Using Environmental Chambers." Version 1.2, January 2017 (Emission testing method for California Specifications 01350).

See California Department of Public Health's website for certification programs and testing labs.
https://www.cdph.ca.gov/Programs/CCDPHP/DEODC/EHLB/IAQ/Pages/VOC.aspx#material

5.504.4.4.1 Carpet cushion. All carpet cushion installed in the building interior shall meet the requirements of the California Department of Public Health,"Standard Method for the Testing and Evaluation of Volatile Organic Chemical Emissions from Indoor Sources Using Environmental Chambers,"Version 1.2, January 2017 (Emission testing method for California Specifications 01350).

See California Department of Public Health's website for certification programs and testing labs.
https://www.cdph.ca.gov/Programs/CCDPHP/DEODC/EHLB/IAQ/Pages/VOC.aspx#material

5.504.4.4.2 Carpet adhesive. All carpet adhesive shall meet the requirements of Table 5.504.4.1.

5.504.4.5 Composite wood products. Hardwood plywood, particleboard and medium density fiberboard composite wood products used on the interior or exterior of the buildings shall meet the requirements for formaldehyde as specified in ARB's Air Toxics Control Measure (ATCM) for Composite Wood (17 CCR 93120 et seq.). Those materials not exempted under the ATCM must meet the specified emission limits, as shown in Table 5.504.4.5.

5.504.4.5.3 Documentation. Verification of compliance with this section shall be provided as requested by the enforcing agency. Documentation shall include at least one of the following:
1. Product certifications and specifications.
2. Chain of custody certifications.
3. Product labeled and invoiced as meeting the Composite Wood Products regulation (see CCR, Title 17, Section 93120, et seq.).
4. Exterior grade products marked as meeting the PS-1 or PS-2 standards of the Engineered Wood Association, the Australian AS/NZS 2269 or European 636 3S standards.
5. Other methods acceptable to the enforcing agency.

TABLE 5.504.4.5 - FORMALDEHYDE LIMITS[1]

MAXIMUM FORMALDEHYDE EMISSIONS IN PARTS PER MILLION

PRODUCT	CURRENT LIMIT
HARDWOOD PLYWOOD VENEER CORE	0.05
HARDWOOD PLYWOOD COMPOSITE CORE	0.05
PARTICLE BOARD	0.09
MEDIUM DENSITY FIBERBOARD	0.11
THIN MEDIUM DENSITY FIBERBOARD[2]	0.13

1. VALUES IN THIS TABLE ARE DERIVED FROM THOSE SPECIFIED BY THE CALIFORNIA AIR RESOURCES BOARD, AIR TOXICS CONTROL MEASURE FOR COMPOSITE WOOD AS TESTED IN ACCORDANCE WITH ASTM E 1333. FOR ADDITIONAL INFORMATION, SEE CALIFORNIA CODE OF REGULATIONS, TITLE 17, SECTIONS 93120 THROUGH 93120.12.

2. THIN MEDIUM DENSITY FIBERBOARD HAS A MAXIMUM THICKNESS OF 5/16 INCHES (8 MM).

5.504.4.6 Resilient flooring systems. Where resilient flooring is installed, at least 80 percent of floor area receiving resilient flooring shall meet the requirements of the California Department of Public Health,"Standard Method for the Testing and Evaluation of Volatile Organic Chemical Emissions from Indoor Sources Using Environmental Chambers," Version 1.2, January 2017 (Emission testing method for California Specifications 01350)

See California Department of Public Health's website for certification programs and testing labs.
https://www.cdph.ca.gov/Programs/CCDPHP/DEODC/EHLB/IAQ/Pages/VOC.aspx#material

5.504.4.6.1 Verification of compliance. Documentation shall be provided verifying that resilient flooring materials meet the pollutant emission limits.

5.504.4.7 Thermal insulation
Comply with the requirements of the California Department of Public Health, "Standard Method of the Testing and Evaluation of Volatile Organic Chemical Emissions from Indoor Sources Using Environmental Chambers, "Version 1.2, January 1.2, January 2017 (Emission testing method for California Specification 01350).
See California Department of Public Health's website for certification programs and testing labs.
https://www.cdph.ca.gov/Programs/CCDPHP/DEODC/EHLB/IAQ/Pages/VOC.aspx#material

5.504.4.7.1 Verification of compliance.
Documentation shall be provided verifying that thermal insulation materials meet the pollutant emission limits.

5.504.4.8 Acoustical ceiling and wall panels.
Comply with the requirements of the California Department of Public Health, "Standard Method for the Testing and Evaluation of Volatile Organic Chemical Emissions from Indoor Sources Using Environmental Chambers, " Version 1.2, January 2017 (Emission testing method for California Specification 01350).
See California Department of Public Health's website for certification programs and testing labs.

5.504.4.8.1 Verification of compliance. Documentation shall be provided verifying that acoustical finish materials meet the pollutant emission limits.

5.504.5.3 Filters. In mechanically ventilated buildings, provide regularly occupied areas of the building with air filtration media for outside and return air that provides at least a Minimum Efficiency Reporting Value (MERV) of 13. MERV 13 filters shall be installed prior to occupancy, and recommendations for maintenance with filters of the same value shall be included in the operation and maintenance manual.

Exceptions: Existing mechanical equipment.

5.504.5.3.1 Labeling. Installed filters shall be clearly labeled by the manufacturer indicating the MERV rating.

C N/A **5.504.7 ENVIRONMENTAL TOBACCO SMOKE (ETS) CONTROL.** Where outdoor areas are provided for smoking, prohibit smoking within 25 feet of building entries, outdoor air intakes and operable windows and within the building as already prohibited by other laws or regulations; or as enforced by ordinances, regulations or policies of any city, county, city and county, California Community College, campus of the California State University, or campus of the University of California, whichever are more stringent. When ordinances, regulations or policies are not in place, post signage to inform building occupants of the prohibitions.

SECTION 5.505 INDOOR MOISTURE CONTROL

C N/A **5.505.1 INDOOR MOISTURE CONTROL.** Buildings shall meet or exceed the provisions of California Building Code, CCR, Title 24, Part 2, Sections 1202 (Ventilation) and Chapter 14 (Exterior Walls). For additional measures, see Section 5.407.2 of this code.

SECTION 5.506 INDOOR AIR QUALITY

C N/A **5.506.1 OUTSIDE AIR DELIVERY.** For mechanically or naturally ventilated spaces in buildings, meet the minimum requirements of Section 120.1 (Requirements For Ventilation) of the *California Energy Code*, or the applicable local code, whichever is more stringent, and Division 1, Chapter 4 of CCR, Title 8.

C N/A **5.506.2 CARBON DIOXIDE (CO_2) MONITORING.** For buildings or additions equipped with demand control ventilation, CO_2 sensors and ventilation controls shall be specified and installed in accordance with the requirements of the California Energy Code, Section 120(c)(4).

C N/A **5.506.3 Carbon dioxide (CO2) monitoring in classrooms.**
(DSA-SS) Each public K-12 school classroom, as listed in Table 120.1-A of the *California Energy Code*, shall be equipped with a carbon dioxide monitor or sensor that meets the following requirements:
1. The monitor or sensor shall be permanently affixed in a tamper-proof manner in each classroom between 3 and 5 feet (914 mm and 1829 mm) above the floor and at least 5 feet (1524 mm) away from door and operable windows.
2. When the monitor or sensor is not integral to an Energy Management Control System (EMCS), the monitor or sensor shall display the carbon dioxide readings on the device. When the sensor is integral to an EMCS, the carbon dioxide readings shall be available to and regularly monitored by facility personnel.
3. A monitor shall provide notification though a visual indicator on the monitor when the carbon dioxide levels in the classroom have exceeded 1,100ppm. A sensor integral to an EMCS shall provide notification to facility personnel through a visual and/or audible indicator when the carbon dioxide levels in the classroom have exceeded 1,100ppm.
4. The monitor or sensor shall measure carbon dioxide levels at minimum 15- minute intervals and shall maintain a record of previous carbon dioxide measurements of not less than 30 days duration.
5. The monitor or sensor used to measure carbon dioxide levels shall have the capacity to measure carbon dioxide levels with a range of 400ppm to 2000ppm or greater.
6. The monitor or sensor shall be certified by the manufacturer to be accurate within 75ppm at 1,000ppm carbon dioxide concentration and shall be certified by the manufacturer to require calibration no more frequently than once every 5 years.

SECTION 5.507 ENVIRONMENTAL COMFORT

C N/A **5.507.4 ACOUSTICAL CONTROL.** Employ building assemblies and components with Sound Transmission Class (STC) values determined in accordance with ASTM E 90 and ASTM E 413, or Outdoor-Indoor Sound Transmission Class (OITC) determined in accordance with ASTM E 1332, using either the prescriptive or performance method in Section 5.507.4.1 or 5.507.4.2.

Exception: Buildings with few or no occupants or where occupants are not likely to be affected by exterior noise, as determined by the enforcement authority, such as factories, stadiums, storage, enclosed parking structures and utility buildings.

Exception: [DSA-SS] For public schools and community colleges, the requirements of this section and all subsections apply only to new construction.

5.507.4.1 Exterior noise transmission, prescriptive method. Wall and roof-ceiling assemblies exposed to the noise source making up the building or addition envelope or altered envelope shall meet a composite STC rating of at least 50 or a composite OITC rating of no less than 40, with exterior windows of a minimum STC of 40 or OITC of 30 in the following locations:

1. Within the 65 CNEL noise contour of an airport.

Exceptions:

1. L_{dn} or CNEL for military airports shall be determined by the facility Air Installation Compatible Land Use Zone (AICUZ) plan.
2. L_{dn} or CNEL for other airports and heliports for which a land use plan has not been developed shall be determined by the local general plan noise element.

2. Within the 65 CNEL or L_{dn} noise contour of a freeway or expressway, railroad, industrial source or fixed-guideway source as determined by the Noise Element of the General Plan.

5.507.4.1.1. Noise exposure where noise contours are not readily available. Buildings exposed to a noise level of 65 dB L_{eq} - 1-hr during any hour of operation shall have building, addition or alteration exterior wall and roof-ceiling assemblies exposed to the noise source meeting a composite STC rating of at least 45 (or OITC 35), with exterior windows of a minimum STC of 40 (or OITC 30).

5.507.4.2 Performance Method. For buildings located as defined in Section 5.507.4.1 or 5.507.4.1.1, wall and roof-ceiling assemblies exposed to the noise source making up the building or addition envelope or altered envelope shall be constructed to provide an interior noise environment attributable to exterior sources that does not exceed an hourly equivalent noise level (Leq-1Hr) of 50 dBA in occupied areas during any hour of operation.

5.507.4.2.1 Site Features. Exterior features such as sound walls or earth berms may be utilized as appropriate to the building, addition or alteration project to mitigate sound migration to the interior.

5.507.4.2.2 Documentation of Compliance. An acoustical analysis documenting complying interior sound levels shall be prepared by personnel approved by the architect or engineer of record.

5.507.4.3 Interior sound transmission. Wall and floor-ceiling assemblies separating tenant spaces and tenant spaces and public places shall have an STC of at least 40.

Note: Examples of assemblies and their various STC ratings may be found at the California Office of Noise Control: www.toolbase.org/PDF/CaseStudies/stc_icc_ratings.pdf.

SECTION 5.508 OUTDOOR AIR QUALITY

C N/A **5.508.1 Ozone depletion and greenhouse gas reductions.** Installations of HVAC, refrigeration and fire suppression equipment shall comply with Sections 5.508.1.1 and 5.508.1.2.

5.508.1.1 Chlorofluorocarbons (CFCs). Install HVAC, refrigeration and fire suppression equipment that do not contain CFCs.

5.508.1.2 Halons. Install HVAC, refrigeration and fire suppression equipment that do not contain Halons.

5.508.2 Supermarket refrigerant leak reduction. New commercial refrigeration systems shall comply with the provisions of this section when installed in retail food stores 8,000 square feet or more conditioned area, and that utilize either refrigerated display cases, or walk-in coolers or freezers connected to remote compressor units or condensing units. The leak reduction measures apply to refrigeration systems containing high-global-warming potential (high-GWP) refrigerants with a GWP of 150 or greater. New refrigeration systems include both new facilities and the replacement of existing refrigeration systems in existing facilities.

Exception: Refrigeration systems containing low-global warming potential (low-GWP) refrigerant with a GWP value less than 150 are not subject to this section. Low-GWP refrigerants are nonozone-depleting refrigerants that include ammonia, carbon dioxide (CO_2), and potentially other refrigerants.

5.508.2.1 Refrigerant piping. Piping compliant with the California Mechanical Code shall be installed to be accessible for leak protection and repairs. Piping runs using threaded pipe, copper tubing with an outside diameter (OD) less than 1/4 inch, flared tubing connections and short radius elbows shall not be used in refrigerant systems except as noted below.

5.508.2.1.1 Threaded pipe. Threaded connections are permitted at the compressor rack.

5.508.2.1.2 Copper pipe. Copper tubing with an OD less than 1/4 inch may be used in systems with a refrigerant charge of 5 pounds or less.

5.508.2.1.2.1 Anchorage. One-fouth-inch OD tubing shall be securely clamped to a rigid base to keep vibration levels below 8 mils.

5.508.2.1.3 Flared tubing connections. Double-flared tubing connections may be used for pressure controls, valve pilot lines and oil.

Exception: Single-flared tubing connections may be used with a multiring seal coated with industrial sealant suitable for use with refrigerants and tightened in accordance with manufacturer's recommendations.

5.508.2.1.4 Elbows. Short radius elbows are only permitted where space limitations prohibit use of long radius elbows.

5.508.2.2 Valves. Valves Valves and fittings shall comply with the *California Mechanical Code* and as follows.

5.508.2.2.1 Pressure relief valves. For vessels containing high-GWP refrigerant, a rupture disc shall be installed between the outlet of the vessel and the inlet of the pressure relief valve.

5.508.2.2.1.1 Pressure detection. A pressure gauge, pressure transducer or other device shall be installed in the space between the rupture disc and the relief valve inlet to indicate a disc rupture or discharge of the relief valve.

5.508.2.2.2 Access valves. Only Schrader access valves with a brass or steel body are permitted for use.

5.508.2.2.2.1 Valve caps. For systems with a refrigerant charge of 5 pounds or more, valve caps shall be brass or steel and not plastic.

5.508.2.2.2.2 Seal caps. If designed for it, the cap shall have a neoprene O-ring in place.

5.508.2.2.2.2.1 Chain tethers. Chain tethers to fit ovr the stem are required for valves designed to have seal caps.

Exception: Valves with seal caps that are not removed from the valve during stem operation.

5.508.2.3 Refrigerated service cases. Refrigerated service cases holding food products containing vinegar and salt shall have evaporator coils of corrosion-resistant material, such as stainless steel; or be coated to prevent corrosion from these substances.

5.508.2.3.1 Coil coating. Consideration shall be given to the heat transfer efficiency of coil coating to maximize energy efficiency.

5.508.2.4 Refrigerant receivers. Refrigerant receivers with capacities greater than 200 pounds shall be fitted with a device tha indicates the level of refrigerant in the receiver.

5.508.2.5 Pressure testing. The system shall be pressure tested during installation prior to evacuation and charging.

5.508.2.5.1 Minimum pressure. The system shall be charged with regulated dry nitrogen and appropriate tracer gas to bring system pressure up to 300 psig minimum.

5.508.2.5.2 Leaks. Check the system for leaks, repair any leaks, and retest for pressure using the same gauge.

5.508.2.5.3 Allowable pressure change. The system shall stand, unaltered, for 24 hours with no more than a +/- one pound pressure change from 300 psig, measured with the same gauge.

5.508.2.6 Evacuation. The system shall be evacuated after pressure testing and prior to charging.

5.508.2.6.1 First vacuum. Pull a system vacuum down to at least 1000 microns (+/- 50 microns), and hold for 30 minutes.

5.508.2.6.2 Second vacuum. Pull a second system vacuum to a minimum of 500 microns and hold for 30 minutes.

5.508.2.6.3 Third vacuum. Pull a third vacuum down to a minimum of 300 microns, and hold for 24 hours with a maximum drift of 100 microns over a 24-hour period.

CHAPTER 7
INSTALLER & SPECIAL INSPECTOR QUALIFICATIONS

702 QUALIFICATIONS

702.1 INSTALLER TRAINING. HVAC system installers shall be trained and certified in the proper installation of HVAC systems including ducts and equipment by a nationally or regionally recognized training or certification program. Uncertified persons may perform HVAC installations when under the direct supervision and responsibility of a person trained and certified to install HVAC systems or contractor licensed to install HVAC systems. Examples of acceptable HVAC training and certification programs include but are not limited to the following:

1. State certified apprenticeship programs.
2. Public utility training programs.
3. Training programs sponsored by trade, labor or statewide energy consulting or verification organizations.
4. Programs sponsored by manufacturing organizations.
5. Other programs acceptable to the enforcing agency.

702.2 SPECIAL INSPECTION [HCD]. When required by the enforcing agency, the owner or the responsible entity acting as the owner's agent shall employ one or more special inspectors to provide inspection or other duties necessary to substantiate compliance with this code. Special inspectors shall demonstrate competence to the satisfaction of the enforcing agency for the particular type of inspection or task to be performed. In addition to other certifications or qualifications acceptable to the enforcing agency, the following certifications or education may be considered by the enforcing agency when evaluating the qualifications of a special inspector:

1. Certification by a national or regional green building program or standard publisher.
2. Certification by a statewide energy consulting or verification organization, such as HERS raters, building performance contractors, and home energy auditors.
3. Successful completion of a third party apprentice training program in the appropriate trade.
4. Other programs acceptable to the enforcing agency.

Notes:

1. Special inspectors shall be independent entities with no financial interest in the materials or the project they are inspecting for compliance with this code.
2. HERS raters are special inspectors certified by the California Energy Commission (CEC) to rate homes in California according to the Home Energy Rating System (HERS).

[BSC-CG] When required by the enforcing agency, the owner or the responsible entity acting as the owner's agent shall employ one or more special inspectors to provide inspection or other duties necessary to substantiate compliance with this code. Special inspectors shall demonstrate competence to the satisfaction of the enforcing agency for the particular type of inspection or task to be performed. In addition, the special inspector shall have a certification from a recognized state, national or international association, as determined by the local agency. The area of certification shall be closely related to the primary job function, as determined by the local agency.

Note: Special inspectors shall be independent entities with no financial interest in the materials or the project they are inspecting for compliance with this code.

703 VERIFICATIONS

703.1 DOCUMENTATION. Documentation used to show compliance with this code shall include but is not limited to, construction documents, plans, specifications, builder or installer certification, inspection reports, or other methods acceptable to the enforcing agency which demonstrate substantial conformance. When specific documentation or special inspection is necessary to verify compliance, that method of compliance will be specified in the appropriate section or identified applicable checklist.

FOR COUNCIL ACTION ONLY

FUHRMAN LEAMY LAND GROUP
DESIGN • SERVICE • SOLUTIONS
3400 DOUGLAS BLVD., SUITE 275
ROSEVILLE, CALIFORNIA 95661
916.783.5263 • FLLANDGROUP.COM

JOB NO. : CRV- 25026

CITY OF ROSEVILLE APPROVAL

PROJECT:
JM-51PARK

7060 LAKEHAVEN DRIVE
ROSEVILLE, CA

CLIENT:
CITY OF ROSEVILLE

REVISIONS	DATE
1	
2	
3	
4	

ISSUE		DATE
1	1ST SUBMITTAL	9.19.2025
2	2ND SUBMITTAL	10.22.2025
3	3RD SUBMITTAL	12.03.2025
4	4TH SUBMITTAL	2.03.2026
5		

REGISTERED LANDSCAPE ARCHITECT
KEVIN C. LEAMY
No. 4965
REGISTERED
12/31/26
Renewal Date
2.01.2026
Date
STATE OF CALIFORNIA

DRAWN : AM
CHECKED : KCL
SCALE: : AS SHOWN

SHEET TITLE:
CAL GREEN DOCUMENTATION

SHEET
CV-2.0C

4 OF 40 SHEETS

DISCLAIMER:THIS DOCUMENT IS PROVIDED AND INTENDED TO BE USED AS A MEANS TO INDICATE AREAS OF COMPLIANCE WITH THE CALIFORNIA GREEN BUILDING STANDARDS (CALGREEN) CODE. DUE TO THE VARIABLES BETWEEN BUILDING DEPARTMENT JURISDICTIONS, THIS CHECKLIST IS TO BE USED ON AN INDIVIDUAL PROJECT BASIS AND MAY BE MODIFIED BY THE END USER TO MEET THOSE INDIVIDUAL NEEDS. THE END USER ASSUMES ALL RESPONSIBILITY ASSOCIATED WITH THE USE OF THIS DOCUMENT, INCLUDING VERIFICATION WITH THE FULL CODE.

FUHRMAN LEAMY LAND GROUP HEREBY EXPRESSLY RESERVES ITS COMMON LAW COPYRIGHT AND OTHER PROPERTY RIGHTS IN THESE PLANS. THESE PLANS AND DRAWINGS ARE NOT TO BE REPRODUCED, CHANGED OR COPIED IN ANY FORM OR MANNER WHATSOEVER WITHOUT FIRST OBTAINING THE EXPRESS WRITTEN PERMISSION OF FUHRMAN LEAMY LAND GROUP NOR ARE THEY TO BE ASSIGNED TO ANY THIRD PARTY WITHOUT FIRST OBTAINING WRITTEN PERMISSION AND CONSENT.

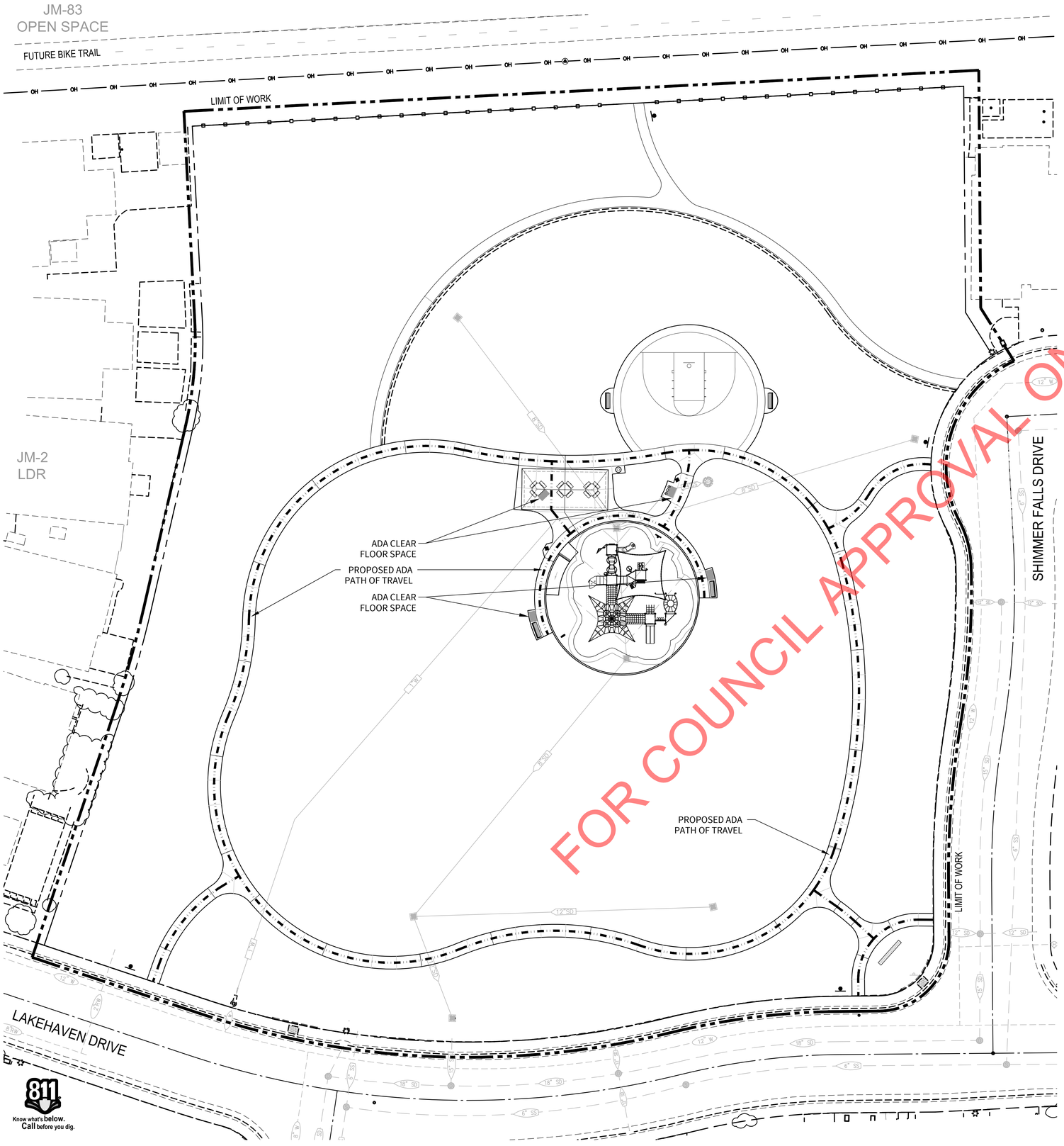

FOR COUNCIL APPROVAL ONLY

CITY OF ROSEVILLE ACCESSIBILITY NOTES:

1. ACCESSIBLE PATHS OF TRAVEL SHALL HAVE WALKING SURFACES NOT STEEPER THAN 1:20 AND THE CROSS SLOPES OF THESE SURFACES SHALL NOT EXCEED 1:48. REFERENCE CBC SEC. 11B-403.3.
2. SIDEWALKS SHALL BE A MINIMUM OF 48 INCHES WIDE. REFERENCE CBC SEC. 11B-403.5.

SCALE: 1" = 20'–0"

0' 20' 80'

10' 40'

FUHRMAN LEAMY
LAND GROUP
DESIGN • SERVICE • SOLUTIONS

3400 DOUGLAS BLVD., SUITE 275
ROSEVILLE, CALIFORNIA 95661
916.783.5263 • FLLANDGROUP.COM

JOB NO. : CRV- 25026

CITY OF ROSEVILLE APPROVAL

PROJECT:

JM-51PARK

7060 LAKEHAVEN DRIVE
ROSEVILLE, CA

CLIENT:
CITY OF ROSEVILLE

REVISIONS	DATE
△	
△	
△	
△	

ISSUE		DATE
1	1ST SUBMITTAL	9.19.2025
2	2ND SUBMITTAL	10.22.2025
3	3RD SUBMITTAL	12.03.2025
4	4TH SUBMITTAL	2.03.2026
5		

REGISTERED LANDSCAPE ARCHITECT
KEVIN C. LEAMY
No. 4965
12/31/26
Renewal Date
2.01.2026
Date
STATE OF CALIFORNIA

DRAWN : AM
CHECKED : KCL
SCALE: : 1"=20'-0"

SHEET TITLE:

SITE ACCESSIBILITY PLAN

SHEET
SA-1.0

5 OF 40 SHEETS

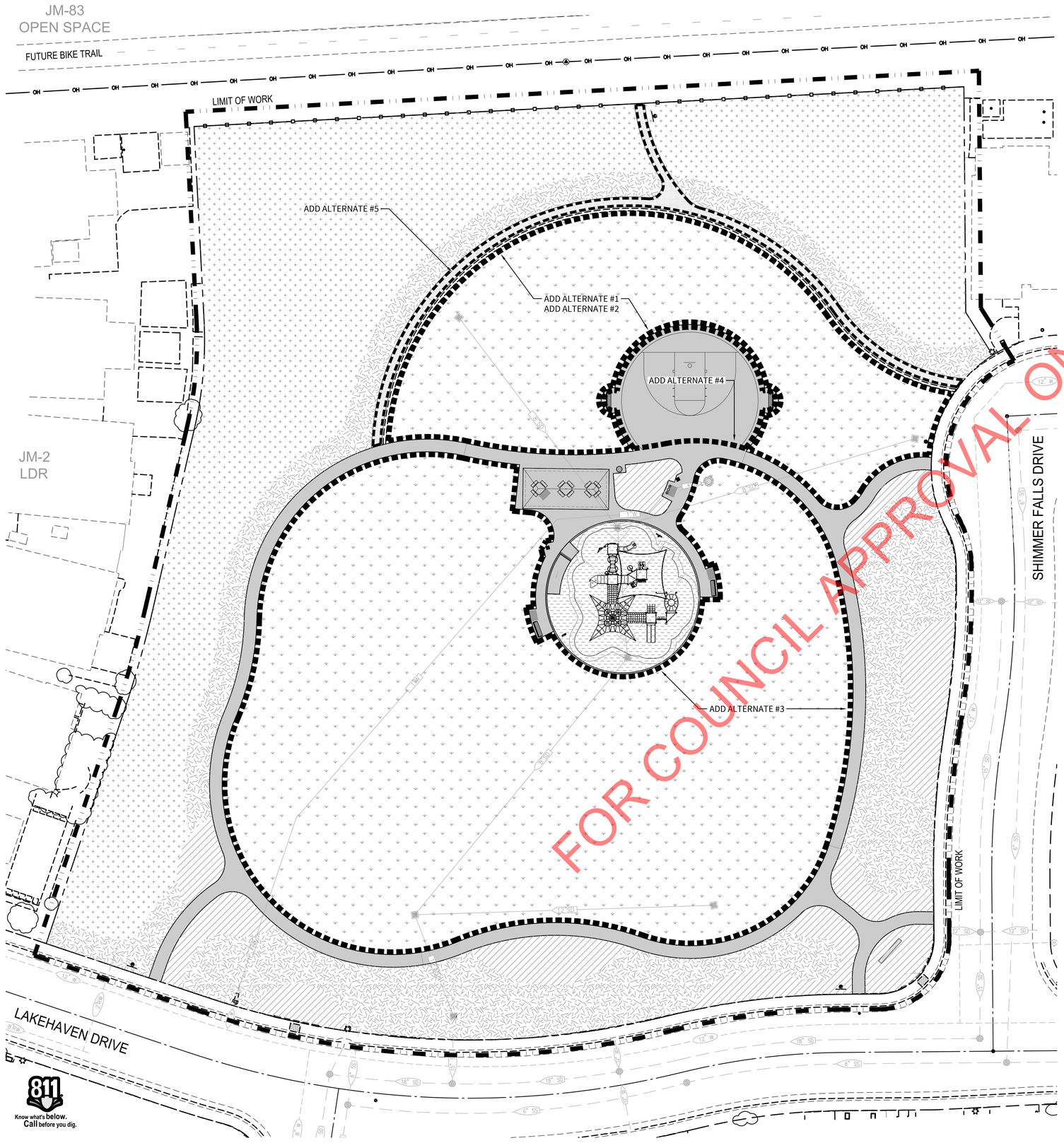

FOR COUNCIL APPROVAL ONLY

LEGEND:

- CURRENT PHASE LIMIT OF WORK
- ADD ALTERNATE LIMIT OF WORK

ADD ALTERNATE #1: SEEDED TURF AREA W/CONCRETE MOWSTRIP.
BASE BID: HYDROSEED & TREE PLANTINGS.

ADD ALTERNATE #2: SODDED TURF AREA (IN LEIU OF SEED) W/CONCRETE MOWSTRIP.
BASE BID: HYDROSEED & TREE PLANTINGS.
(NOTE: AWARD OF ALT. #2 IS CONTINGENT ON AWARD OF ALT. #1.)

ADD ALTERNATE #3: SODDED TURF AREA .
BASE BID: SEEDED TURF.

ADD ALTERNATE #4: HALF-COURT BASKETBALL & BENCHES.
BASE BID: HYDROSEED & TREE PLANTINGS.

ADD ALTERNATE #5: CONCRETE NATURE TRAIL.
BASE BID: DIRT TRAIL CUT IN AFTER HYDROSEED ESTABLISHMENT.

- PROPOSED TURF
- PROPOSED SHRUB AND GROUNDCOVER & BARK MULCH
- PROPOSED DIRT NATURE TRAIL
- PROPOSED PEDESTRIAN LOAD CONCRETE
- PROPOSED ENGINEERED WOOD FIBAR
- PROPOSED HYDROSEED & TREES
- PROPOSED BARK MULCH ONLY AREAS

SCALE: 1" = 20'–0"
0' 20' 80'
10' 40'

FUHRMAN LEAMY
LAND GROUP
DESIGN • SERVICE • SOLUTIONS
3400 DOUGLAS BLVD., SUITE 275
ROSEVILLE, CALIFORNIA 95661
916.783.5263 • FLLANDGROUP.COM

JOB NO. : CRV- 25026

CITY OF ROSEVILLE APPROVAL

PROJECT:
JM-51PARK

7060 LAKEHAVEN DRIVE
ROSEVILLE, CA

CLIENT:
CITY OF ROSEVILLE

REVISIONS	DATE
△	
△	
△	
△	

ISSUE		DATE
1	1ST SUBMITTAL	9.19.2025
2	2ND SUBMITTAL	10.22.2025
3	3RD SUBMITTAL	12.03.2025
4	4TH SUBMITTAL	2.03.2026
5		

REGISTERED LANDSCAPE ARCHITECT
KEVIN C. LEAMY
No. 4965
Signature
12/31/26
Renewal Date
2.01.2026
Date
STATE OF CALIFORNIA

DRAWN : AM
CHECKED : KCL
SCALE: : 1"=20'-0"

SHEET TITLE:
SCOPE OF WORK PLAN

SHEET
SW-1.0
6 OF 40 SHEETS

FUHRMAN LEAMY LAND GROUP HEREBY EXPRESSLY RESERVES ITS COMMON LAW COPYRIGHT AND OTHER PROPERTY RIGHTS IN THESE PLANS. THESE PLANS AND DRAWINGS ARE NOT TO BE REPRODUCED, CHANGED OR COPIED IN ANY FORM OR MANNER WHATSOEVER WITHOUT FIRST OBTAINING THE EXPRESS WRITTEN PERMISSION OF FUHRMAN LEAMY LAND GROUP NOR ARE THEY TO BE ASSIGNED TO ANY THIRD PARTY WITHOUT FIRST OBTAINING WRITTEN PERMISSION AND CONSENT.

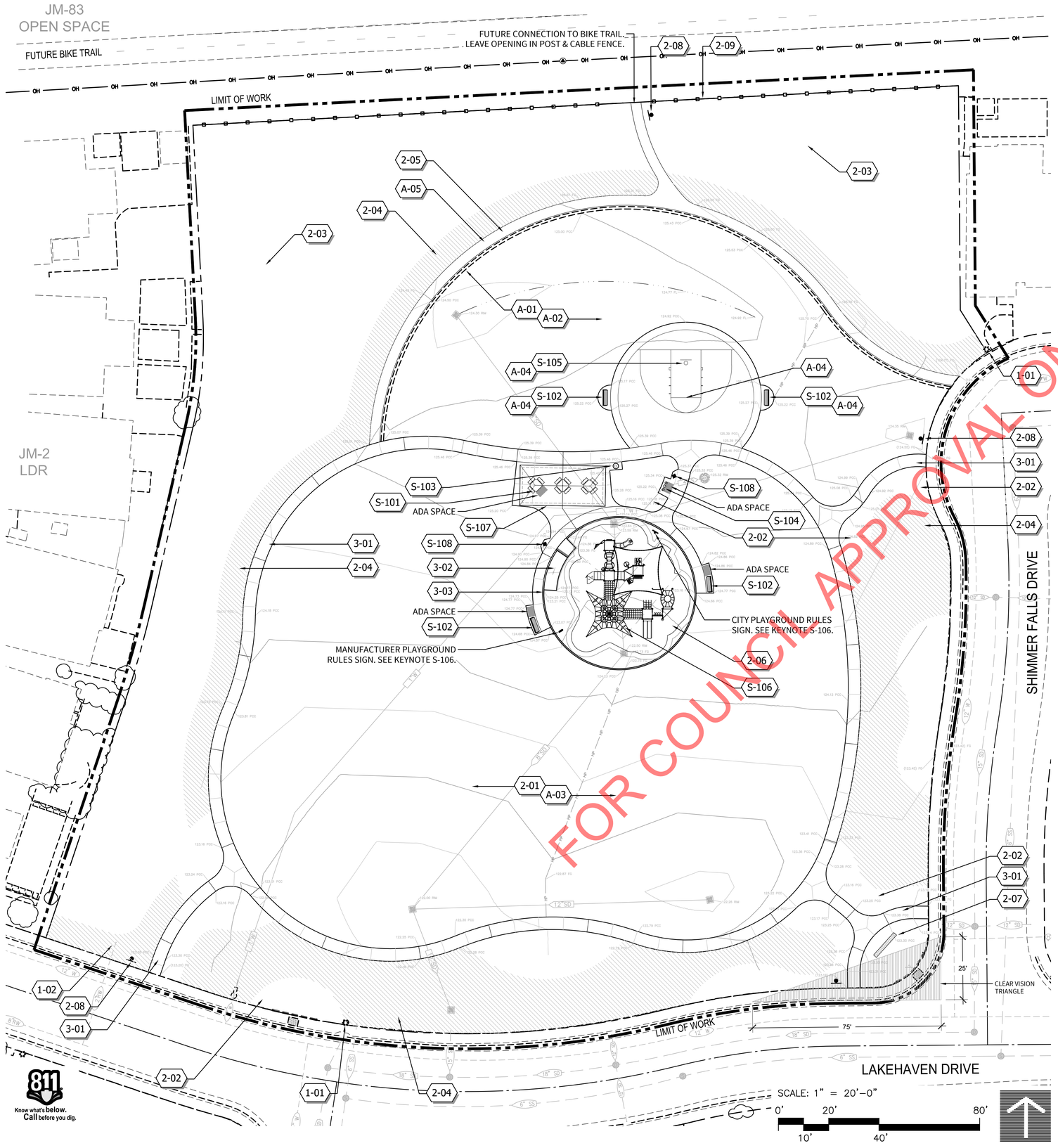

811 Know what's below. Call before you dig.

FUHRMAN LEAMY LAND GROUP HEREBY EXPRESSLY RESERVES ITS COMMON LAW COPYRIGHT AND OTHER PROPERTY RIGHTS IN THESE PLANS. THESE PLANS AND DRAWINGS ARE NOT TO BE REPRODUCED, CHANGED OR COPIED IN ANY FORM OR MANNER WHATSOEVER WITHOUT FIRST OBTAINING THE EXPRESS WRITTEN PERMISSION OF FUHRMAN LEAMY LAND GROUP NOR ARE THEY TO BE ASSIGNED TO ANY THIRD PARTY WITHOUT FIRST OBTAINING WRITTEN PERMISSION AND CONSENT.

CONSTRUCTION KEYNOTES

CODE	DESCRIPTION	DETAIL
1 - GENERAL KEYNOTES		
1-01	EXISTING STREET LIGHT. VERIFY IN FIELD. PROTECT IN PLACE.	--
1-02	EXISTING RECYCLED WATER POINT OF CONNECTION FOR IRRIGATION SERVICE. VERIFY LOCATION IN FIELD.	--
2 - SITE KEYNOTES		
2-01	PROPOSED SEEDED TURF AREA. SEE PLANTING PLANS.	--
2-02	PROPOSED PLANTING AREA. SEE PLANTING PLANS.	--
2-03	PROPOSED HYDROSEED AREA. SEE PLANTING PLANS.	--
2-04	PROVIDE BARK MULCH BUFFER PER CITY OF ROSEVILLE PARKS CONSTRUCTION STANDARDS. SEE PLANTING PLANS.	--
2-05	PROVIDE DIRT NATURE TRAIL PER CITY OF ROSEVILLE PARKS CONSTRUCTION STDS. NOTE: FINAL NATURE TRAIL ALIGNMENT TO BE CONFIRMED IN THE FIELD.	--
2-06	PROVIDE ENGINEERED WOOD FIBAR AT PLAY AREA PER CITY OF ROSEVILLE PARKS CONSTRUCTION STANDARDS.	--
2-07	PROVIDE PARK SIGN PER CITY OF ROSEVILLE PARKS CONSTRUCTION STANDARDS.	G/LC-2.0
2-08	PROVIDE RECYCLED WATER SIGN. TYPICAL OF 4.	I/LC-2.0
2-09	PROVIDE POST & CABLE FENCE PER CITY OF ROSEVILLE PARKS CONSTRUCTION STDS.	I/LC-2.0
3 - CONCRETE KEY NOTES		
3-01	PROVIDE PEDESTRIAN LOAD CONCRETE WALKS WITHIN PARK INTERIOR PER THE CITY OF ROSEVILLE PARKS CONSTRUCTION STANDARDS.	A & B/LC-2.0
3-02	PROVIDE CONCRETE PLAY AREA ACCESS WALK INTO PLAY AREAS PER CITY OF ROSEVILLE PARKS CONSTRUCTION STANDARDS.	E/LC-2.0
3-03	PROVIDE CONCRETE PLAY AREA CURB PER CITY OF ROSEVILLE PARKS CONSTRUCTION STANDARDS.	D/LC-2.0
SITE FURNISHINGS		
S-101	PROVIDE 4' SQUARE PICNIC TABLE PER MANUFACTURER SPECIFICATIONS AND CITY OF ROSEVILLE PARKS CONSTRUCTION STANDARDS. TYPICAL OF (1) STANDARD TABLES (4-SEATS) & (1) ADA TABLES (3-SEATS). MANUFACTURER: MY-T-COAT MODEL: TSQ46-B-13-000 & TSQ46-B-15-013 (ADA) (PUNCHED STEEL - SURFACE MNT) COLOR: AS SELECTED BY CITY CONTACT: GLEN WURSTER W/ALL ABOUT PLAY @ 916.923.2180	F/LC-2.0
S-102	PROVIDE 6` BENCH PER MANUFACTURER SPECIFICATIONS AND CITY OF ROSEVILLE PARKS CONSTRUCTION STANDARDS. TYPICAL OF 4. MANUFACTURER: MY-T-COAT MODEL: BRT06-B-19-000 (6' BENCH W/BACK - PUNCHED STEEL - SURFACE MOUNT) COLOR: AS SELECTED BY CITY CONTACT: GLEN WURSTER W/ALL ABOUT PLAY @ 916.923.2180	F/LC-2.0
S-103	PROVIDE TRASH RECEPTACLE PER CITY OF ROSEVILLE PARKS CONSTRUCTION STANDARDS. TYPICAL OF 1. MANUFACTURER: MY-T-COAT MODEL: RDW32-H-02-000 (DOWNTOWN W/SIDE OPENING, FLATTOP, SLATTED STEEL, INDUSTRY STANDARD COATING W/32-GALLON BONNET TOP LID, SURFACE MOUNT) COLOR: AS SELECTED BY CITY CONTACT: GLEN WURSTER W/ALL ABOUT PLAY @ 916.923.2180	--
S-104	PROVIDE DRINKING FOUNTAIN WITH BOTTLE FILLER AND RECESSED HOSE BIBB PER CITY OF ROSEVILLE PARKS CONSTRUCTION STANDARDS. SEE DETAIL. MANUFACTURER: MOST DEPENDABLE FOUNTAINS MODEL: 10145 SMFA (FRONT APPROACH) COLOR: AS SELECTED BY CITY WATER & SEWER CONNECTION: SEE CIVIL PLANS, THIS SET.	H/LC-2.0
S-105	PROVIDE BASKETBALL GOAL PER CITY OF ROSEVILLE PARKS CONSTRUCTION STANDARDS (SEE ADD ALTERNATE #2). TYPICAL OF 1. MANUFACTURER: PATTERSON WILLIAMS MODEL: 1513-26-44 W/#29 BACKBOARD PERIMETER CONTACT: SHANA FRIESEN W/MIRACLE PLAY SYSTEMS @ 510.514.5212	--
S-106	PROVIDE 2-12 PLAYGROUND ASSEMBLY PER MANUFACTURER`S SPECIFICATIONS. MANUFACTURER: LITTLE TIKES MODEL: CUSTOM (OPTION #1) COLOR: AS SELECTED BY CITY CONTACT: GLEN WURSTER W/ALL ABOUT PLAY @ 916.923.2180 NOTE: CONTRACTOR TO PROVIDE CITY PLAYGROUND RULES SIGN PER CITY OF ROSEVILLE PARKS CONSTRUCTION STANDARDS AND MANUFACTURER PLAYGROUND RULES SIGN. SEE PLAN FOR LOCATION.	--
S-107	PROVIDE PREFABRICATED SHADE STRUCTURE. TYPICAL OF 1. MANUFACTURER: POLIGON MODEL: RAM 16X34 FRAME & ROOF COLOR: AS SELECTED BY CITY CONTACT: DAN BAXTER W/MIRACLE PLAY SYSTEMS @ 916.413.2120	A/LC-2.1
S-108	PROVIDE SECURITY LIGHT PER CITY OF ROSEVILLE PARKS CONSTRUCTION STANDARDS. TYPICAL OF 1. SEE ELECTRICAL SHEETS.	L/LC-2.0

ADD ALTERNATE KEYNOTES: SEE SCOPE OF WORK PLAN (SW-1.0)

A-01	**ADD ALTERNATE #1:** PROVIDE SEEDED TURF AREA WITH 12" CONCRETE MOWSTRIP PER CITY OF ROSEVILLE PARKS CONSTRUCTION STDS. SEE PLANTING PLANS.	C/LC-2.0
A-02	**ADD ALTERNATE #2:** PROVIDE SODDED TURF AREA (IN LIEU OF SEED) WITH 12" CONCRETE MOWSTRIP PER CITY PARKS CONST. STDS. SEE PLANTING PLANS.	C/LC-2.0
A-03	**ADD ALTERNATE #3:** PROVIDE SODDED TURF PER CITY OF ROSEVILLE PARKS CONSTRUCTION STDS. SEE PLANTING PLANS.	--
A-04	**ADD ALTERNATE #4:** PROVIDE CONCRETE HALF-BASKETBALL COURT & BENCHES PER CITY OF ROSEVILLE PARKS CONSTRUCTION STDS. SEE KEYNOTE S-102 & S-105.	J/LC-2.0
A-05	**ADD ALTERNATE #5:** PROVIDE CONCRETE NATURE TRAIL PER CITY OF ROSEVILLE PARKS CONSTRUCTION STDS.	A/LC-2.0

FUHRMAN LEAMY LAND GROUP
DESIGN • SERVICE • SOLUTIONS
3400 DOUGLAS BLVD., SUITE 275
ROSEVILLE, CALIFORNIA 95661
916.783.5263 • FLLANDGROUP.COM

JOB NO. : CRV- 25026

CITY OF ROSEVILLE APPROVAL

PROJECT:

JM-51PARK

7060 LAKEHAVEN DRIVE
ROSEVILLE, CA

CLIENT:
CITY OF ROSEVILLE

REVISIONS	DATE
△	
△	
△	
△	

ISSUE		DATE
1	1ST SUBMITTAL	9.19.2025
2	2ND SUBMITTAL	10.22.2025
3	3RD SUBMITTAL	12.03.2025
4	4TH SUBMITTAL	2.03.2026
5		

REGISTERED LANDSCAPE ARCHITECT
KEVIN C. LEAMY
No. 4965
Signature
12/31/26
Renewal Date
2.01.2026
Date
STATE OF CALIFORNIA

DRAWN : AM
CHECKED : KCL
SCALE. : 1"=20'-0"

SHEET TITLE:

LANDSCAPE CONSTRUCTION PLAN & KEYNOTES

SHEET

LC-1.0

7 OF 40 SHEETS

FUHRMAN LEAMY LAND GROUP HEREBY EXPRESSLY RESERVES ITS COMMON LAW COPYRIGHT AND OTHER PROPERTY RIGHTS IN THESE PLANS. THESE PLANS AND DRAWINGS ARE NOT TO BE REPRODUCED, CHANGED OR COPIED IN ANY FORM OR MANNER WHATSOEVER WITHOUT FIRST OBTAINING THE EXPRESS WRITTEN PERMISSION OF FUHRMAN LEAMY LAND GROUP NOR ARE THEY TO BE ASSIGNED TO ANY THIRD PARTY WITHOUT FIRST OBTAINING WRITTEN PERMISSION AND CONSENT

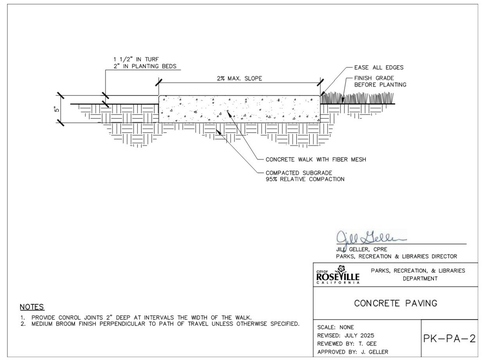

NOTES
1. PROVIDE CONTROL JOINTS 2" DEEP AT INTERVALS THE WIDTH OF THE WALK.
2. MEDIUM BROOM FINISH PERPENDICULAR TO PATH OF TRAVEL UNLESS OTHERWISE SPECIFIED.

JILL GELLER, CPRE
PARKS, RECREATION & LIBRARIES DIRECTOR

CITY OF ROSEVILLE CALIFORNIA — PARKS, RECREATION, & LIBRARIES DEPARTMENT

CONCRETE PAVING

SCALE: NONE
REVISED: JULY 2025
REVIEWED BY: T. GEE
APPROVED BY: J. GELLER

PK–PA–2

A CONCRETE PAVING
NOT TO SCALE — PR-25027-38

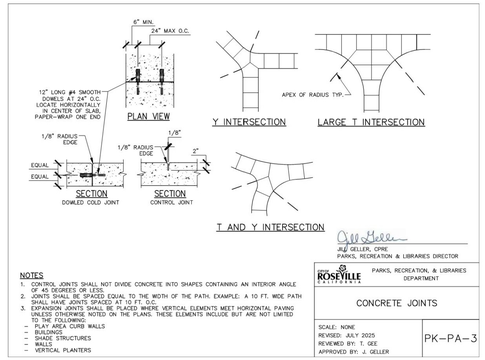

NOTES
1. CONTROL JOINTS SHALL NOT DIVIDE CONCRETE INTO SHAPES CONTAINING AN INTERIOR ANGLE OF 45 DEGREES OR LESS.
2. JOINTS SHALL BE SPACED EQUAL TO THE WIDTH OF THE PATH. EXAMPLE: A 10 FT. WIDE PATH SHALL HAVE JOINTS SPACED AT 10 FT. O.C.
3. EXPANSION JOINTS SHALL BE PLACED WHERE VERTICAL ELEMENTS MEET HORIZONTAL PAVING UNLESS OTHERWISE NOTED ON THE PLANS. THESE ELEMENTS INCLUDE BUT ARE NOT LIMITED TO THE FOLLOWING:
   – CONCRETE CURB WALLS
   – BUILDINGS
   – SHADE STRUCTURES
   – WALLS
   – VERTICAL PLANTERS

JILL GELLER, CPRE
PARKS, RECREATION & LIBRARIES DIRECTOR

CITY OF ROSEVILLE CALIFORNIA — PARKS, RECREATION, & LIBRARIES DEPARTMENT

CONCRETE JOINTS

SCALE: NONE
REVISED: JULY 2025
REVIEWED BY: T. GEE
APPROVED BY: J. GELLER

PK–PA–3

B CONCRETE JOINTS
NOT TO SCALE — PR-25026-32

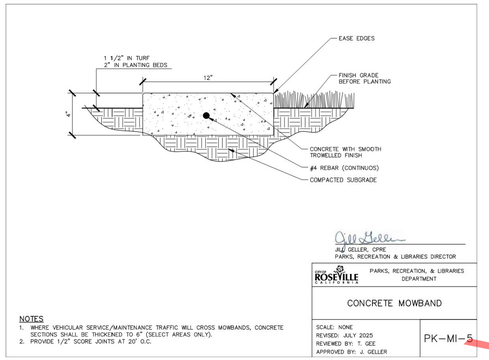

NOTES
1. WHERE VEHICULAR SERVICE/MAINTENANCE TRAFFIC WILL CROSS MOWBANDS, CONCRETE SECTIONS SHALL BE THICKENED TO 6" (SELECT AREAS ONLY).
2. PROVIDE 1/2" SCORE JOINTS AT 20' O.C.

JILL GELLER, CPRE
PARKS, RECREATION & LIBRARIES DIRECTOR

CITY OF ROSEVILLE CALIFORNIA — PARKS, RECREATION, & LIBRARIES DEPARTMENT

CONCRETE MOWBAND

SCALE: NONE
REVISED: JULY 2025
REVIEWED BY: T. GEE
APPROVED BY: J. GELLER

PK–MI–5

C CONCRETE MOWBAND
NOT TO SCALE — PR-25027-27

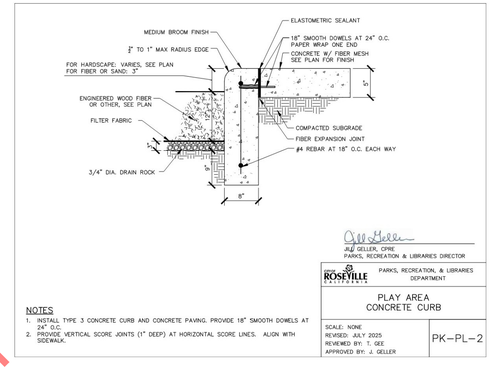

NOTES
1. INSTALL TYPE 3 CONCRETE CURB AND CONCRETE PAVING. PROVIDE 18" SMOOTH DOWELS AT 24" O.C.
2. PROVIDE VERTICAL SCORE JOINTS (1" DEEP) AT HORIZONTAL SCORE LINES. ALIGN WITH SIDEWALK.

JILL GELLER, CPRE
PARKS, RECREATION & LIBRARIES DIRECTOR

CITY OF ROSEVILLE CALIFORNIA — PARKS, RECREATION, & LIBRARIES DEPARTMENT

PLAY AREA
CONCRETE CURB

SCALE: NONE
REVISED: JULY 2025
REVIEWED BY: T. GEE
APPROVED BY: J. GELLER

PK–PL–2

D PLAY AREA CONCRETE CURB
NOT TO SCALE — PR-25027-45

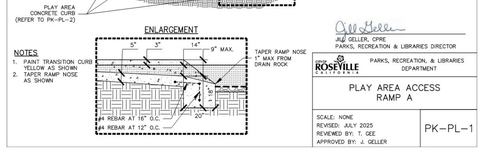

NOTES
1. PAINT TRANSITION CURB YELLOW AS SHOWN
2. TAPER RAMP NOSE AS SHOWN

JILL GELLER, CPRE
PARKS, RECREATION & LIBRARIES DIRECTOR

CITY OF ROSEVILLE CALIFORNIA — PARKS, RECREATION, & LIBRARIES DEPARTMENT

PLAY AREA ACCESS RAMP A

SCALE: NONE
REVISED: JULY 2025
REVIEWED BY: T. GEE
APPROVED BY: J. GELLER

PK–PL–1

E PLAY AREA ACCESS RAMP 'A'
NOT TO SCALE — PR-25027-44

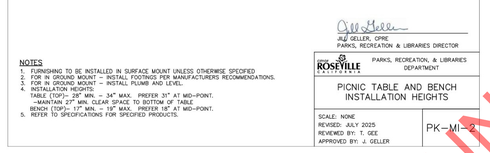

NOTES
1. FURNISHING TO BE INSTALLED IN SURFACE MOUNT UNLESS OTHERWISE SPECIFIED
2. FOR IN GROUND MOUNT – INSTALL FOOTINGS PER MANUFACTURER'S RECOMMENDATIONS.
3. FOR IN GROUND MOUNT – INSTALL PLUMB AND LEVEL.
4. INSTALLATION HEIGHTS:
   TABLE (TOP)– 28" MIN. – 34" MAX. PREFER 31" AT MID–POINT.
   –MAINTAIN 27" MIN. CLEAR SPACE TO BOTTOM OF TABLE
   BENCH (TOP)– 17" MIN. – 19" MAX. PREFER 18" AT MID–POINT.
5. REFER TO SPECIFICATIONS FOR SPECIFIED PRODUCTS.

JILL GELLER, CPRE
PARKS, RECREATION & LIBRARIES DIRECTOR

CITY OF ROSEVILLE CALIFORNIA — PARKS, RECREATION, & LIBRARIES DEPARTMENT

PICNIC TABLE AND BENCH INSTALLATION HEIGHTS

SCALE: NONE
REVISED: JULY 2025
REVIEWED BY: T. GEE
APPROVED BY: J. GELLER

PK–MI–2

F PICNIC TABLE & BENCH INSTALLATION HEIGHTS
NOT TO SCALE — PR-25027-24

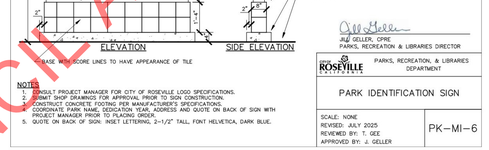

NOTES
1. CONSULT PROJECT MANAGER FOR CITY OF ROSEVILLE LOGO SPECIFICATIONS.
2. SUBMIT SHOP DRAWINGS FOR APPROVAL PRIOR TO SIGN CONSTRUCTION.
3. CONSTRUCT CONCRETE FOOTING PER MANUFACTURER'S SPECIFICATIONS.
4. COORDINATE PARK NAME, DEDICATION YEAR, ADDRESS AND QUOTE ON BACK OF SIGN WITH PROJECT MANAGER PRIOR TO PLACING ORDER.
5. QUOTE ON BACK OF SIGN: INSET LETTERING, 2–1/2" TALL, FONT HELVETICA, DARK BLUE.

JILL GELLER, CPRE
PARKS, RECREATION & LIBRARIES DIRECTOR

CITY OF ROSEVILLE CALIFORNIA — PARKS, RECREATION, & LIBRARIES DEPARTMENT

PARK IDENTIFICATION SIGN

SCALE: NONE
REVISED: JULY 2025
REVIEWED BY: T. GEE
APPROVED BY: J. GELLER

PK–MI–6

G PARK IDENTIFICATION SIGN
NOT TO SCALE — PR-25027-22

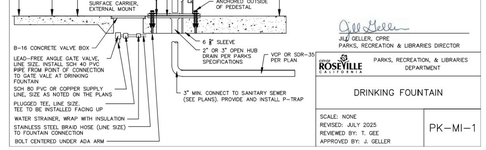

NOTES
1. PROVIDE LINE SIZE TWO WAY CLEAN OUT EVERY 100' ON SANITARY SEWER LINE UPSTREAM OF Y.
2. 10" STAINLESS STEEL SURFACE CARRIER REQUIRED, EXTERNAL MOUNT.
3. FOUNTAIN BASE PER MANUFACTURER'S SPECIFICATIONS.
4. LOCATION OF DRINKING FOUNTAIN "ON" BUTTON AND LOCATION OF BOTTLE FILLER SPOUT TO BE DETERMINED VIA THE SUBMITTAL PROCESS.
5. INCLUDE BOTTLE FILLER OPTION AS SHOWN ON PLANS/SPECIFICATIONS.
6. MAY DISCHARGE TO SUMP IN LIEU OF SEWER CONNECTION IF SHOWN ON PLANS.

JILL GELLER, CPRE
PARKS, RECREATION & LIBRARIES DIRECTOR

CITY OF ROSEVILLE CALIFORNIA — PARKS, RECREATION, & LIBRARIES DEPARTMENT

DRINKING FOUNTAIN

SCALE: NONE
REVISED: JULY 2025
REVIEWED BY: T. GEE
APPROVED BY: J. GELLER

PK–MI–1

H DRINKING FOUNTAIN
NOT TO SCALE — PR-25027-21

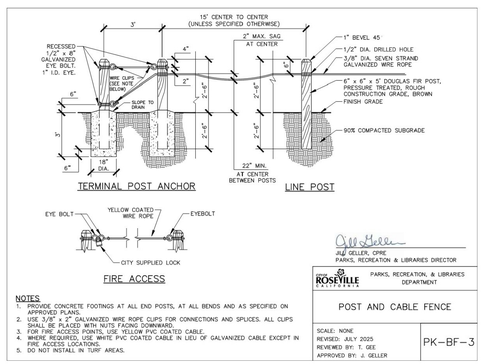

NOTES
1. PROVIDE CONCRETE FOOTINGS AT ALL END POSTS, AT ALL BENDS AND AS SPECIFIED ON APPROVED PLANS.
2. 3/16" x 4" GALVANIZED WIRE ROPE CLIPS FOR CONNECTIONS AND SPLICES. ALL CLIPS SHALL BE PLACED WITH NUTS FACING DOWNWARD.
3. FOR FIRE ACCESS POINTS, USE YELLOW PVC COATED CABLE.
4. WHERE REQUIRED, USE WHITE PVC COATED CABLE IN LIEU OF GALVANIZED CABLE EXCEPT IN FIRE ACCESS LOCATIONS.
5. DO NOT INSTALL IN TURF AREAS.

JILL GELLER, CPRE
PARKS, RECREATION & LIBRARIES DIRECTOR

CITY OF ROSEVILLE CALIFORNIA — PARKS, RECREATION, & LIBRARIES DEPARTMENT

POST AND CABLE FENCE

SCALE: NONE
REVISED: JULY 2025
REVIEWED BY: T. GEE
APPROVED BY: J. GELLER

PK–BF–3

I POST & CABLE FENCE
NOT TO SCALE — PR-25026-21

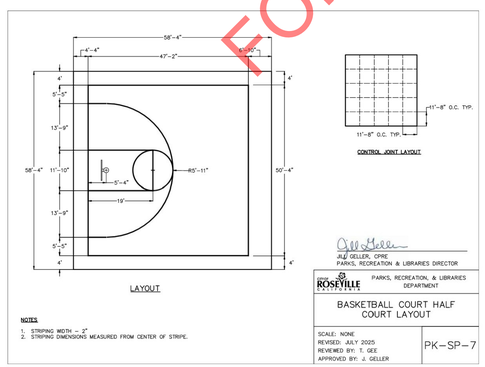

NOTES
1. STRIPING WIDTH – 2"
2. STRIPING DIMENSIONS MEASURED FROM CENTER OF STRIPE.

JILL GELLER, CPRE
PARKS, RECREATION & LIBRARIES DIRECTOR

CITY OF ROSEVILLE CALIFORNIA — PARKS, RECREATION, & LIBRARIES DEPARTMENT

BASKETBALL COURT HALF COURT LAYOUT

SCALE: NONE
REVISED: JULY 2025
REVIEWED BY: T. GEE
APPROVED BY: J. GELLER

PK–SP–7

J BASKETBALL HALF-COURT LAYOUT
NOT TO SCALE — PR-25026-55

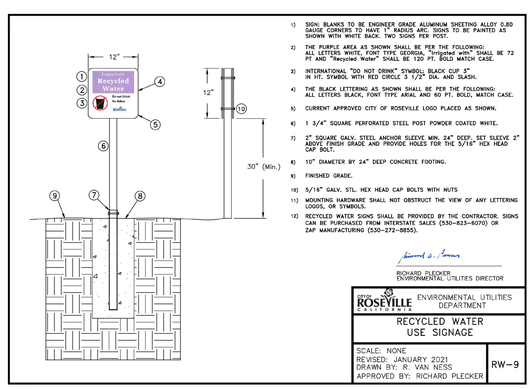

1) SIGN: BLANKS TO BE ENGINEER GRADE ALUMINUM SHEETING ALLOY 0.80 GAUGE CORNERS TO HAVE 1" RADIUS ARC. SIGNS TO BE PAINTED AS SHOWN WITH WHITE BACK. TWO SIGNS PER POST.
2) THE PURPLE AREA AS SHOWN SHALL BE PER THE FOLLOWING: ALL LETTERS BLACK, FONT TYPE ARIAL AND NO FT. BOLD; "Recycled Water" SHALL BE 72 PT AND "Recycled Water" SHALL BE 120 PT. BOLD MATCH CASE.
3) INTERNATIONAL "DO NOT DRINK" SYMBOL BLACK CUP 3" IN HT. SYMBOL WITH RED CIRCLE 1 1/2" DIA. AND SLASH.
4) THE BLACK LETTERING AS SHOWN SHALL BE PER THE FOLLOWING: ALL LETTERS BLACK, FONT TYPE ARIAL AND NO FT. BOLD; MATCH CASE.
5) CURRENT APPROVED CITY OF ROSEVILLE LOGO PLACED AS SHOWN.
6) 1 3/4" SQUARE PERFORATED STEEL POST POWDER COATED WHITE.
7) 2" SQUARE GALV. STEEL ANCHOR SLEEVE MIN. 24" DEEP, SET SLEEVE 2" ABOVE FINISH GRADE AND PROVIDE HOLES FOR THE 5/16" HEX HEAD CAP BOLT.
8) 10" DIAMETER BY 24" DEEP CONCRETE FOOTING.
9) FINISHED GRADE.
10) 5/16" GALV. STL. HEX HEAD CAP BOLTS WITH NUTS
11) MOUNTING HARDWARE SHALL NOT OBSTRUCT THE VIEW OF ANY LETTERING LOGOS, OR SYMBOLS.
12) RECYCLED WATER SIGNS SHALL BE PROVIDED BY THE CONTRACTOR. SIGNS CAN BE PURCHASED FROM INTERSTATE SALES (530–823–6070) OR ZAP MANUFACTURING (530–272–8855).

RICHARD FLECKER
ENVIRONMENTAL UTILITIES DIRECTOR

CITY OF ROSEVILLE CALIFORNIA — ENVIRONMENTAL UTILITIES DEPARTMENT

RECYCLED WATER USE SIGNAGE

SCALE: NONE
REVISED: JANUARY 2021
DRAWN BY: R. VAN NESS
APPROVED BY: RICHARD FLECKER

RW–9

K RECYCLED WATER SIGN
NOT TO SCALE — PR-25027-12

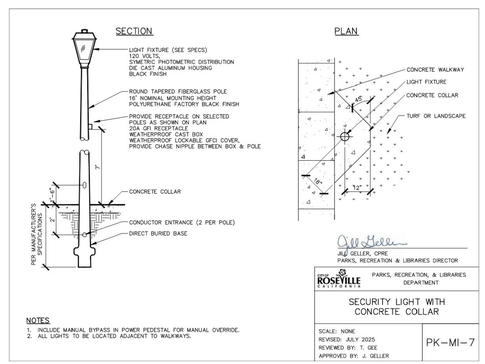

NOTES
1. INCLUDE MANUAL BYPASS IN POWER PEDESTAL FOR MANUAL OVERRIDE.
2. ALL LIGHTS TO BE LOCATED ADJACENT TO WALKWAYS.

JILL GELLER, CPRE
PARKS, RECREATION & LIBRARIES DIRECTOR

CITY OF ROSEVILLE CALIFORNIA — PARKS, RECREATION, & LIBRARIES DEPARTMENT

SECURITY LIGHT WITH CONCRETE COLLAR

SCALE: NONE
REVISED: JULY 2025
REVIEWED BY: T. GEE
APPROVED BY: J. GELLER

PK–MI–7

L SECURITY LIGHT WITH CONCRETE COLLAR
NOT TO SCALE — PR-25027-26

FOR COUNCIL APPROVAL ONLY

FUHRMAN LEAMY
LAND GROUP
DESIGN • SERVICE • SOLUTIONS
3400 DOUGLAS BLVD., SUITE 275
ROSEVILLE, CALIFORNIA 95661
916.783.5263 • FLLANDGROUP.COM

JOB NO. : CRV- 25026

CITY OF ROSEVILLE APPROVAL

PROJECT:
JM-51PARK

7060 LAKEHAVEN DRIVE
ROSEVILLE, CA

CLIENT:
CITY OF ROSEVILLE

REVISIONS	DATE
△	
△	
△	
△	

ISSUE		DATE
1	1ST SUBMITTAL	9.19.2025
2	2ND SUBMITTAL	10.22.2025
3	3RD SUBMITTAL	12.03.2025
4	4TH SUBMITTAL	2.03.2026
5		

REGISTERED LANDSCAPE ARCHITECT
KEVIN C. LEAMY
No. 4965
Renewal Date 12/31/26
Date 2.01.2026
STATE OF CALIFORNIA

DRAWN : AM
CHECKED : KCL
SCALE: : 1"=20'-0"

SHEET TITLE:
LANDSCAPE CONSTRUCTION DETAILS

SHEET
LC-2.0
8 OF 40 SHEETS

poligon®

A Division of PORTERCORP 4240 N. 136th AVE HOLLAND, MI 49424 (616) 888-3500

PROJECT NAME: JM-51 PARK

PROJECT LOCATION: ROSEVILLE, CA

BUILDING TYPE: RAM 16X34

ROOF TYPE: MULTI-RIB

BUILDING NUMBER: P23083

ORDER NUMBER: 84619

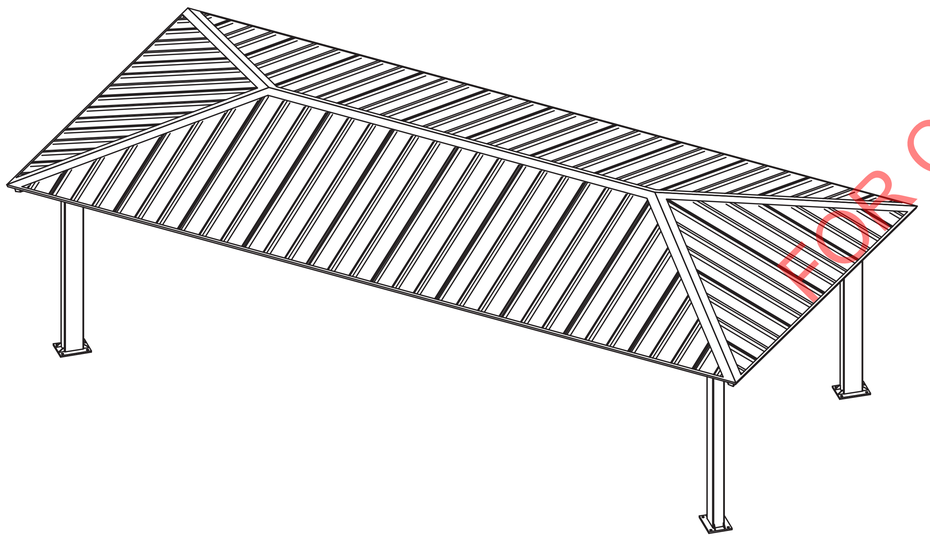

DRAWING LIST:

SHEET NUMBER	DRAWING DESCRIPTION
CS	COVER SHEET
1	ARCHITECTURAL ELEVATIONS
2-2.1	ANCHOR AND FOOTING LAYOUT / DETAILS
3	STRUCTURAL FRAMING PLAN
4-4.1	FRAME CONNECTION DETAILS
~~5~~	~~ELECTRICAL VIEWS - N/A~~
6-6.2	ROOF LAYOUT
7-7.2	ROOF CONNECTION DETAILS

MANUFACTURER NOTES:

MATERIALS:

DESCRIPTION	ASTM DESIGNATION
TUBE STEEL	A500 (GRADE C)
SCHEDULE PIPE	A53 (GRADE B)
RMT PIPE	A519
LIGHT GAGE COLD FORMED	A1003 (GRADE 50)
STRUCTURAL STEEL PLATE	A36
ROOF PANELS (STEEL)	A653
ANCHOR BOLTS	SEE SHEET 2.1

GENERAL NOTES:

1. PORTER CORP IS RESPONSIBLE ONLY FOR THE STRUCTURAL DESIGN OF THE STEEL STRUCTURE (AND FOUNDATION DESIGN IF APPLICABLE) IT SELLS TO THE BUILDER. PORTER CORP OR THEIR ENGINEER IS NOT THE DESIGN PROFESSIONAL OR ENGINEER OF RECORD FOR THE CONSTRUCTION PROJECT. PORTER CORP IS NOT RESPONSIBLE FOR THE DESIGN OF ANY COMPONENTS OR MATERIALS NOT SOLD BY IT OR THEIR INTERFACE AND CONNECTION WITH THE STEEL STRUCTURE.
2. UNLESS NOTED OTHERWISE, THIS STRUCTURE WAS DESIGNED TO ONLY SUPPORT WHAT IS SHOWN ON THESE DRAWINGS. POLIGON MUST BE CONTACTED IF ANYTHING ELSE IS TO BE ATTACHED TO THIS STRUCTURE (WALLS, COLUMN WRAPS, RAILINGS, ETC.) SO THE DESIGN OF THIS STRUCTURE CAN BE REVIEWED AND POSSIBLY REVISED.
3. THE ENGINEERING SEAL FOR THE STRUCTURE DETAILED IN THESE DRAWINGS IS ONLY VALID IF PORTER CORP DESIGNS AND FABRICATES THE STEEL COMPONENTS. FABRICATING THE STEEL COMPONENTS ELSEWHERE VOIDS THE ENGINEERING PROVIDED BY PORTER CORP.
4. UNLESS NOTED OTHERWISE, THIS STRUCTURE WAS DESIGNED ASSUMING A 20' SEPARATION BETWEEN ANY ADJACENT STRUCTURE WITH AN EAVE HEIGHT EQUAL TO OR GREATER THAN THE EAVE HEIGHT OF THIS STRUCTURE (SEE SNOW DESIGN DATA). IF THAT SEPARATION DOES NOT EXIST AND THE GROUND SNOW LOAD (PG) IS GREATER THAN 0 PSF, POLIGON MUST BE CONTACTED SO THE DESIGN OF THIS STRUCTURE CAN BE REVIEWED AND POSSIBLY REVISED.
5. STRUCTURAL STEEL SHALL BE DETAILED, FABRICATED, AND ERECTED IN ACCORDANCE WITH THE AMERICAN INSTITUTE OF STEEL CONSTRUCTION (AISC) SPECIFICATION MANUAL REFERENCED IN THE GOVERNING BUILDING CODE.
6. ALL WELDING IS PERFORMED BY AMERICAN WELDING SOCIETY (AWS) CERTIFIED WELDERS AND CONFORMS TO AWS D1.1 OR D1.3 AS REQUIRED.
7. PARTS SHOWN MAY BE UPGRADED DUE TO STANDARDIZED FABRICATION. REFER TO THE SHIPPING BILL OF MATERIALS AND FINAL INSTALLATION INSTRUCTIONS INCLUDED WITH THE STRUCTURE FOR POSSIBLE SUBSTITUTIONS AND IMPROVEMENTS.
8. FOR PROPER FIELD INSTALLATION OF THE BUILDING IT IS RECOMMENDED THAT THE PRIMARY FRAME INSTALLER AND THE ROOF INSTALLER HAVE A MINIMUM FIVE (5) YEARS DOCUMENTED EXPERIENCE INSTALLING THIS TYPE OF PRODUCT.
9. THE DRAWINGS REPRESENT THE FINISHED STRUCTURE. THE CONTRACTOR SHALL SUPERVISE AND DIRECT THE WORK, AND SHALL BE SOLELY RESPONSIBLE FOR CONSTRUCTION MEANS, TECHNIQUES, SEQUENCES AND PROCEDURES, INCLUDING BRACING, SHORING, LAYDOWN AND PROTECTION OF CONSTRUCTION MATERIALS, ETC. TEMPORARY SHORING AND BRACING SHALL BE THE RESPONSIBILITY OF THE CONTRACTOR.
10. FOR PROPER FIELD INSTALLATION OF THE BUILDING IT IS RECOMMENDED THAT ELECTRIC WIRING, IF REQUIRED, BE RUN THROUGH THE STRUCTURAL MEMBERS BEFORE THE BUILDING IS ERECTED.
11. MAKING HOLES, CUTS OR MODIFICATIONS TO THE STRUCTURAL STEEL MEMBERS IS NOT PERMITTED IN THE FIELD WITHOUT SPECIFIC APPROVAL OF POLIGON.

CERTIFICATES:

MIAMI-DADE COUNTY CERTIFICATE OF COMPETENCY NO. 25-0730.11
PCI (POWDER COATING INSTITUTE) 4000 CERTIFIED

FABRICATOR APPROVALS:

CITY OF PHOENIX, AZ APPROVED FABRICATOR #C08-2010
CITY OF LOS ANGELES, CA APPROVED FABRICATOR #FB01596
CITY OF RIVERSIDE, CA APPROVED FABRICATOR #SF_000042
CITY OF HOUSTON, TX APPROVED FABRICATOR #470
CLARK COUNTY, NV APPROVED FABRICATOR #264
STATE OF UTAH APPROVED FABRICATOR 02008-14
AISC APPROVED FABRICATOR C-00026910
AWS CERTIFIED WELDING FABRICATOR #240707F

FOR COUNTY APPROVAL ONLY

DESIGN CRITERIA:

GENERAL:
2022 CALIFORNIA BUILDING CODE
RISK CATEGORY: II

DEAD LOAD:
ROOF DEAD LOAD: 2 PSF
FRAME DEAD LOAD: SELF WEIGHT

LIVE LOAD:
ROOF LIVE LOAD: 20 PSF

SNOW DESIGN DATA:
GROUND SNOW LOAD (Pg): 0 PSF
FLAT ROOF SNOW LOAD (Pf): 0 PSF
SNOW EXPOSURE FACTOR (Ce): 1.0
SNOW LOAD IMPORTANCE FACTOR (Is): 1.0
THERMAL FACTOR (Ct): 1.2
ROOF SLOPE FACTOR (Cs): 1.0
DRIFT SURCHARGE LOAD (Pd): 0 PSF
WIDTH OF SNOW DRIFT (w): 0 FT
MINIMUM HORIZONTAL SEPARATION DISTANCE (s): 20 FT

WIND DESIGN DATA:
BASIC WIND SPEED (V): 95 MPH
ALLOWABLE STRESS DESIGN WIND SPEED (Vasd): 74 MPH
GUST EFFECT FACTOR (G): 0.85
INTERNAL PRESSURE COEFFICIENT (GCpi): 0
WIND EXPOSURE: C

SEISMIC DESIGN DATA:
STEEL ORDINARY CANTILEVER
COLUMN SYSTEMS
SEISMIC IMPORTANCE FACTOR (Ie): 1.0
SEISMIC DESIGN CATEGORY: D
SEISMIC SITE CLASS: D DEFAULT
SHORT SPECTRAL RESPONSE (Ss): 0.44
1-SEC SPECTRAL RESPONSE (S1): 0.22
DESIGN SHORT SPECTRAL RESPONSE (SDS): 0.42
DESIGN 1-SEC SPECTRAL RESPONSE (SD1): 0.48
SEISMIC RESPONSE COEFFICIENT (Cs): 0.34
RESPONSE MODIFICATION COEFFICIENT (R): 1.25
EQUIVALENT LATERAL FORCE PROCEDURE
SEE CALCULATIONS FOR ADDITIONAL DATA

ADDITIONAL CRITERIA:
NONE

PROFESSIONAL ENGINEER
CHRISTOPHER M EVANS
C78816
CIVIL
STATE OF CALIFORNIA

Christopher Evans
2025.11.30 20:36:51-05'00'

IF THESE DRAWINGS ARE SEALED, THE SEAL APPLIES ONLY TO BUILDING COMPONENTS DETAILED WITHIN THESE DRAWINGS AND SUPPLIED BY PORTER CORP AS WELL AS THE FOUNDATION DESIGN, IF APPLICABLE.

poligon® WWW.POLIGON.COM
by PORTER CORP MAIN: (616) 888-3500
FIELD SUPPORT: (616) 888-3504

PRINT DATE: 11/25/2025
SCALE: 1:75
DRAWN BY: rachel.walters
REV LEVEL: A
CREATION DATE: 11/16/2016
ORDER NO: 84619
CAD MODEL: _P23083

PROJECT: JM-51 PARK
PROJECT LOCATION: ROSEVILLE, CA
DRAWING: COVER SHEET

SHEET
CS

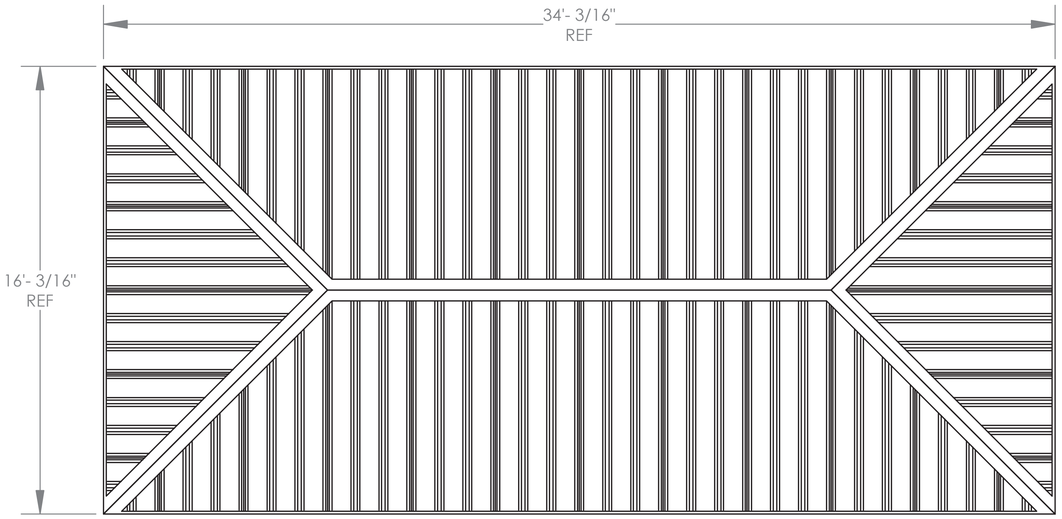

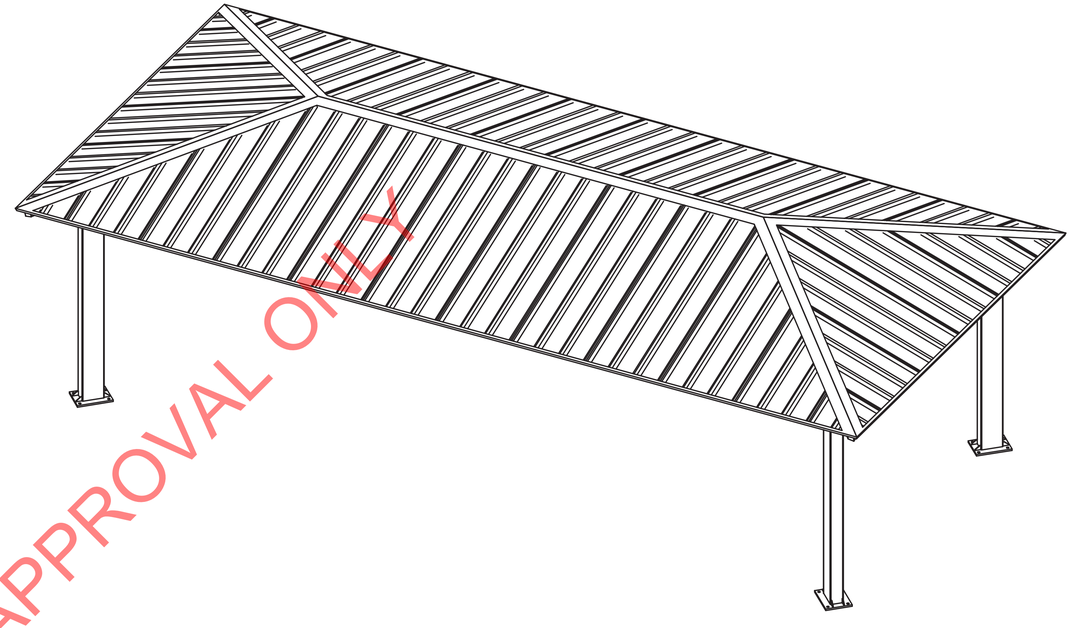

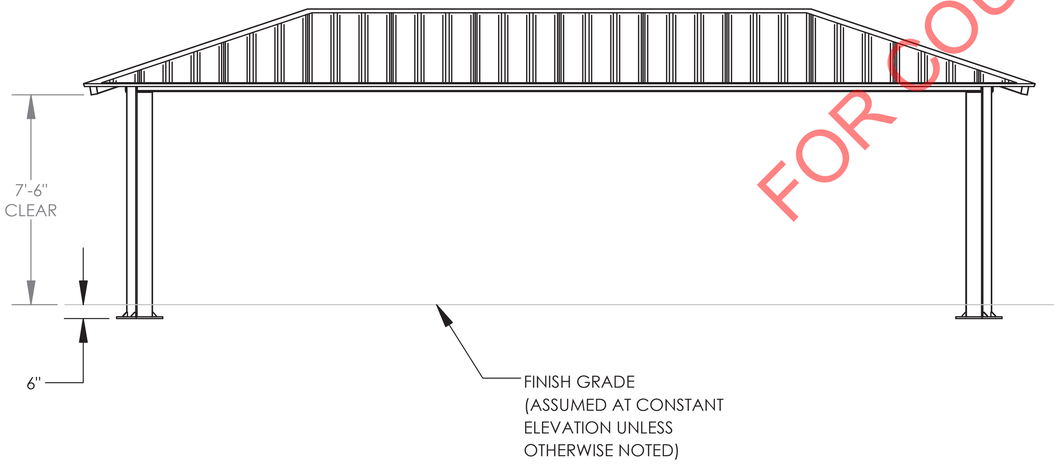

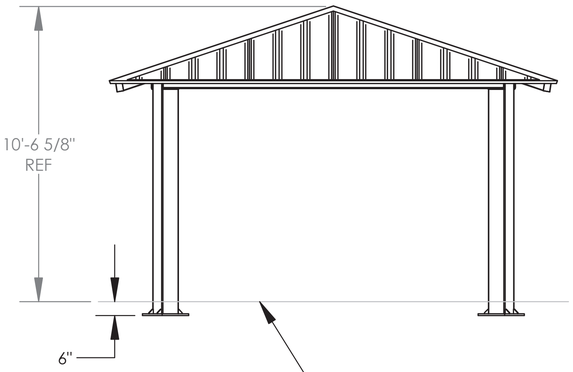

FOR COUNCIL APPROVAL ONLY

poligon® by PORTER CORP
WWW.POLIGON.COM
MAIN: (616) 888-3500
FIELD SUPPORT: (616) 888-3504

PRINT DATE: 11/25/2025
SCALE: 1:65
DRAWN BY: rachel.walters
REV LEVEL: A
CREATION DATE: 11/16/2016
ORDER NO: 84619
CAD MODEL: _P23083

PROJECT: JM-51 PARK
PROJECT LOCATION: ROSEVILLE, CA
DRAWING: ARCHITECTURAL ELEVATIONS

PROFESSIONAL ENGINEER
CHRISTOPHER M EVANS
C78816
CIVIL
STATE OF CALIFORNIA

Christopher Evans
2025.11.30 20:37:18-05'00'

IF THESE DRAWINGS ARE SEALED, THE SEAL APPLIES ONLY TO BUILDING COMPONENTS DETAILED WITHIN THESE DRAWINGS AND SUPPLIED BY PORTER CORP AS WELL AS THE FOUNDATION DESIGN, IF APPLICABLE.

SHEET
1

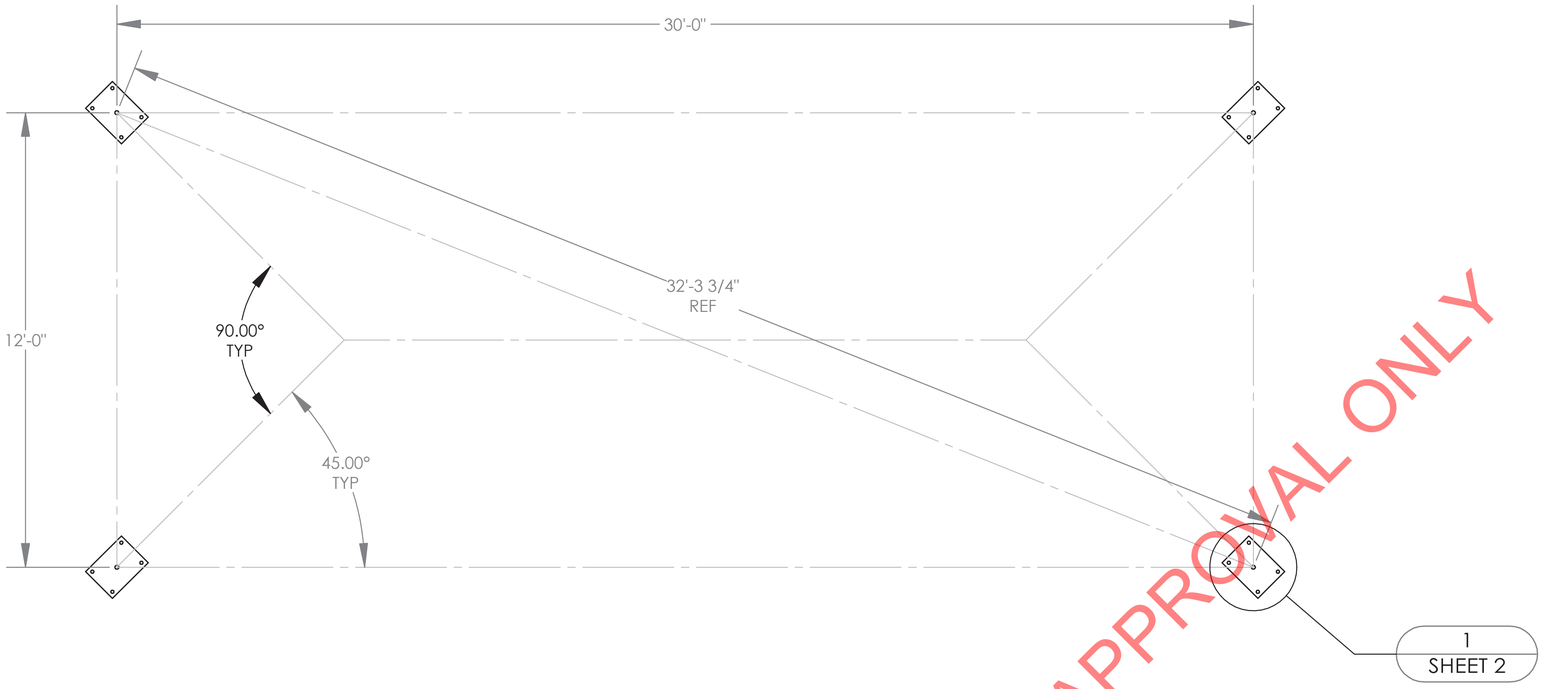

ANCHOR AND FOOTING LAYOUT NOTES:

1. ANCHORS MUST BE CENTERED IN FOOTINGS
2. FOOTINGS MUST BE TURNED TO ALIGN WITH COLUMN AND TRUSS CENTERLINE.

FOR COUNCIL APPROVAL ONLY

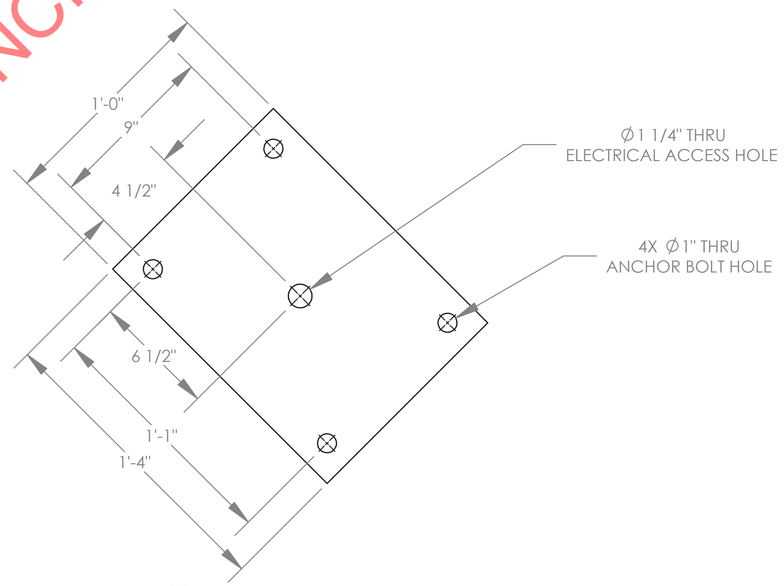

1/2 ANCHOR BOLT PATTERN
BASE PLATE THICKNESS: 3/4"

PROFESSIONAL ENGINEER
CHRISTOPHER M EVANS
C78816
CIVIL
STATE OF CALIFORNIA

Christopher Evans
2025.11.30 20:37:24-05'00'

IF THESE DRAWINGS ARE SEALED, THE SEAL APPLIES ONLY TO BUILDING COMPONENTS DETAILED WITHIN THESE DRAWINGS AND SUPPLIED BY PORTER CORP AS WELL AS THE FOUNDATION DESIGN, IF APPLICABLE.

poligon® WWW.POLIGON.COM
by PORTER CORP MAIN: (616) 888-3500
FIELD SUPPORT: (616) 888-3504

PRINT DATE:	11/25/2025
SCALE:	1:48
DRAWN BY:	rachel.walters
REV LEVEL:	A
CREATION DATE:	11/16/2016
ORDER NO:	84619
CAD MODEL:	_P23083
PROJECT:	JM-51 PARK
PROJECT LOCATION:	ROSEVILLE, CA
DRAWING:	ANCHOR AND FOOTING LAYOUT
SHEET	2

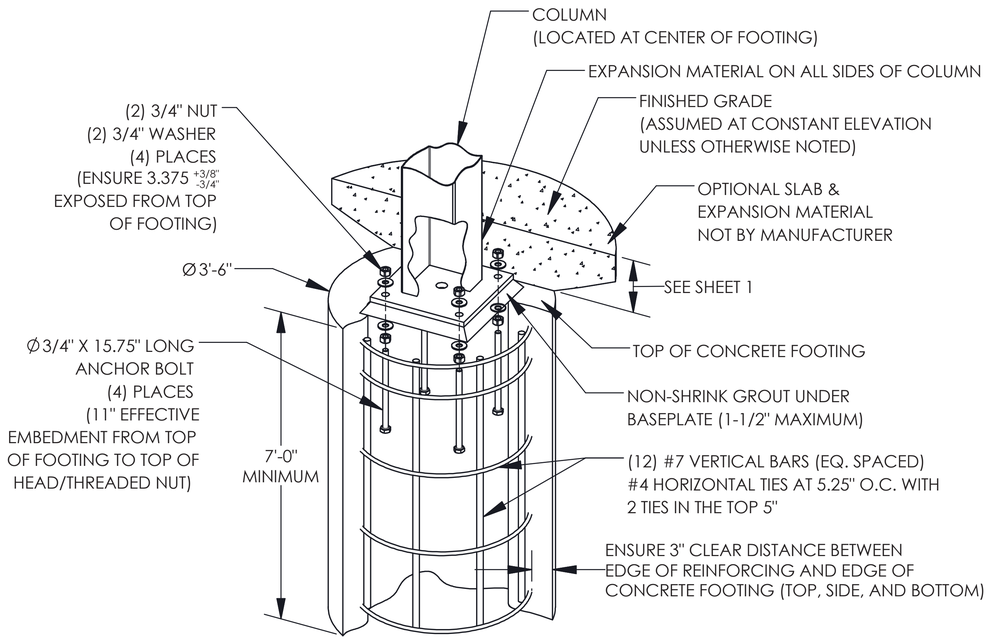

PIER FOOTING OPTION (EXTERNAL ANCHOR BOLTS)

FOOTING DESIGN BY MANUFACTURER, FOOTING MATERIALS BY OTHERS.
(TYPICAL WITH EACH COLUMN, QTY OF REINFORCING AND ANCHOR BOLTS
SPECIFIED IN NOTES REFLECT SITE SPECIFIC REQUIREMENTS)

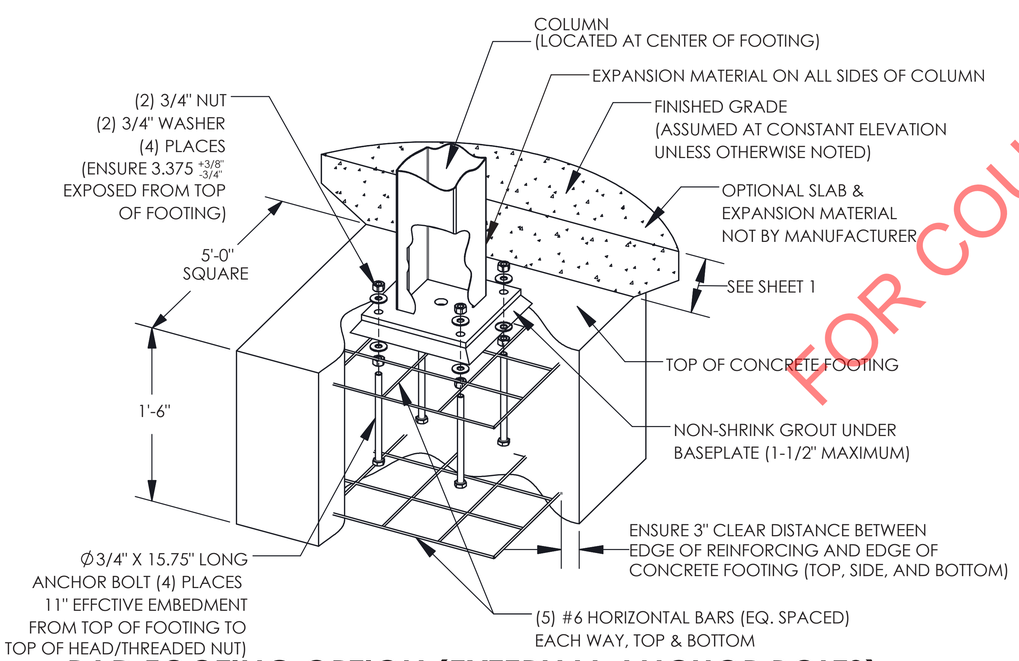

PAD FOOTING OPTION (EXTERNAL ANCHOR BOLTS)

FOOTING DESIGN BY MANUFACTURER, FOOTING MATERIALS BY OTHERS.
(TYPICAL WITH EACH COLUMN, QTY OF REINFORCING AND ANCHOR BOLTS
SPECIFIED IN NOTES REFLECT SITE SPECIFIC REQUIREMENTS)

ANCHOR BOLT NOTES - EXTERNAL (ANCHOR BOLTS LOCATED OUTSIDE COLUMN):

1. ANCHOR RODS TO BE ASTM F1554 GRADE 55 TYPE S1 WITH "UNC" CLASS 2A THREADS, HEAVY HEX NUTS AND STANDARD CUT WASHERS, UNLESS OTHERWISE NOTED.
2. ANCHOR BOLTS SHALL BE EITHER "HEADED" OR "THREADED WITH NUT" AS DEFINED IN THE AMERICAN INSTITUTE OF STEEL CONSTRUCTION MANUAL.
3. HOOKED ANCHOR BOLTS ARE NOT ACCEPTABLE.
4. ACCURATE ANCHOR BOLT PLACEMENT IS CRITICAL. TO ENSURE THE ANCHOR BOLT LAYOUT MEETS THE DIMENSIONS REQUIRED ON THE DRAWINGS, SURVEY (OR MEASURE) THE LOCATION OF ALL ANCHOR BOLTS PRIOR TO POURING THE FOOTINGS. AN ADDITIONAL SURVEY (OR MEASUREMENT) SHOULD BE MADE AFTER THE FOOTINGS ARE POURED TO CONFIRM THE ANCHOR BOLTS DID NOT SHIFT DURING THE CONCRETE POUR.
5. THE MANUFACTURER STRONGLY RECOMMENDS USING ANCHOR BOLT TEMPLATES BECAUSE THEY SIGNIFICANTLY IMPROVE THE ACCURACY OF ANCHOR BOLT PLACEMENT. AN ANCHOR BOLT TEMPLATE IS PROVIDED WITH ANY ANCHOR BOLT KIT PURCHASED.
6. IF OUTSIDE CONSULTING ENGINEERS ARE DESIGNING THE FOUNDATIONS FOR THIS STRUCTURE, THEY MUST REFER TO THE MANUFACTURER'S CALCULATIONS FOR MINIMUM CONCRETE PROPERTIES (COMPRESSIVE STRENGTH, EDGE DISTANCE, ETC.) REQUIRED FOR THE ANCHOR BOLT DESIGN.
7. ELECTRICAL ACCESS HOLE IS ALWAYS LOCATED IN THE COLUMN BASE PLATE AS SHOWN. TEMPLATE MUST BE REMOVED BEFORE INSTALLING COLUMNS.
8. GROUT UNDER BASEPLATES SHALL BE NON-METALLIC, NON-SHRINK GROUT WITH MINIMUM f'c=6500 PSI.
9. THE CALCULATIONS FOR THIS STRUCTURE ASSUME A FIXED COLUMN BASE.
10. THE FOLLOWING ADHESIVE ANCHORS MAY BE SUBSTITUTED FOR THE CAST-IN-PLACE ANCHOR BOLTS:
-HILTI HIT-HY 200 (A OR R) V3 ADHESIVE WITH Ø 3/4" HAS-E ROD WITH 11" EFFECTIVE EMBEDMENT.
CONTRACTOR SHALL FOLLOW ALL INSTALLATION SPECIFICATIONS AND REQUIREMENTS OF ANCHOR MANUFACTURER.

CONCRETE NOTES:

1. ALL CONCRETE CONSTRUCTION SHALL CONFORM TO THE CURRENT "ACI MANUAL OF CONCRETE PRACTICE".
2. PORTLAND CEMENT SHALL CONFORM TO ASTM C-150 TYPE II OR TYPE V.
3. IT IS THE CONTRACTOR'S RESPONSIBILITY TO VERIFY THE CONCRETE MIX DESIGN MEETS THE "ACI MANUAL OF CONCRETE PRACTICE" REQUIREMENTS FOR CONCRETE BY EXPOSURE CLASS.
4. THE USE OF CHLORIDE ACCELERATORS IS NOT PERMITTED.
5. COARSE AGGREGATE SHALL BE #57 OR LARGER.
6. CONCRETE AT PLACEMENT SHALL HAVE A SLUMP OF 4" +/- 1".
7. MINIMUM CONCRETE COMPRESSIVE STRENTGH AT 28 DAYS: 4500 PSI.
8. REINFORCING STEEL SHALL BE DEFORMED STEEL CONFORMING TO THE REQUIREMENTS OF ASTM A615 (DEFORMATIONS SHALL BE IN ACCORDANCE WITH ASTM A305) AS FOLLOWS:
GRADE 60: #4 BARS AND LARGER
GRADE 40: #3 BARS
9. PRIOR TO PLACING OF CONCRETE, REINFORCING STEEL AND EMBEDDED ITEMS SHALL BE WELL SECURED IN POSITION.
10. MAINTAIN 3" CONCRETE COVERAGE TO FACE OF BARS UNLESS OTHERWISE NOTED.
11. BARS SHALL BE CLEAN OF RUST, GREASE OR OTHER MATERIAL LIKELY TO IMPAIR BOND. BENDS SHALL BE MADE COLD.
12. WELDING OF REINFORCEMENT IS NOT ALLOWED.
13. ALL EXPOSED EXTERNAL CORNER OF FOUNDATIONS TO BE CHAMFERED BY 3/4" BY 45 DEGREES UNLESS NOTED OTHERWISE.
14. ALL NEW CONCRETE SHALL BE CURED IMMEDIATELY AFTER FINISHING OF REMOVING FORMWORK. CURING SHALL BE EITHER A MOIST CURE METHOD OR THE USE OF A CURING COMPOUND.

FOUNDATION NOTES:

1. FOUNDATIONS SHALL BEAR ON COMPETENT, UNDISTURBED SOIL OR 95% COMPACTED FILL. IF SIGNS OF ORGANIC MATERIAL, UNCONTROLLED FILL, CLAY OR SILT, HIGH WATER TABLE OR OTHER POSSIBLE DETRIMENTAL CONDITIONS ARE FOUND, CONSTRUCTION OF THE FOUNDATIONS MUST BE STOPPED AND A GEOTECHNICAL ENGINEER BE CONTACTED.
2. NO FOUNDATIONS SHALL BE PLACED INTO OR ADJACENT TO SUBGRADE CONTAINING WATER, ICE, FROST, ORGANIC OR LOOSE MATERIAL.
3. WATER SHALL NOT BE PERMITTED TO ACCUMULATE IN FOUNDATION EXCAVATIONS.
4. IT IS THE CONTRACTOR'S RESPONSIBILITY TO VERIFY THE LOCAL FROST DEPTH REQUIREMENT PRIOR TO CONSTRUCTION.
5. IF FOUNDATIONS SHOWN DO NOT MEET LOCAL FROST DEPTH REQUIREMENTS, EXTEND THE DRILLED PIER FOUNDATION AS REQUIRED, EXTENDING THE VERTICAL BARS AND PROVIDING ADDITIONAL TIES TO MEET SPACING REQUIREMENTS AS SHOWN. IF FROST DEPTH REQUIREMENTS ARE NOT MET, AND NO DRILLED PIER DESIGN IS PROVIDED, CONTACT POLIGON.
6. ALLOWABLE SOIL PRESSURES (AS APPLICABLE):

SPREAD PAD	
VERTICAL BEARING	1500 PSF
LATERAL COHESION	130 PSF
DRILLED PIER	
VERTICAL BEARING	1500 PSF
LATERAL BEARING	100 PSF/FT

THE FOUNDATION DESIGN SHOWN ON THESE DRAWINGS IS NOT SITE SPECIFIC, BUT BASED ON THE PRESUMPTIVE ALLOWABLE FOUNDATION PRESSURES IN CHAPTER 18 OF THE BUILDING CODE (CLASS 5 SOIL). THE BUILDING OFFICIAL IN THE JURISDICTION IN WHICH THIS STRUCTURE IS LOCATED MAY REQUIRE A SITE SPECIFIC GEOTECHNICAL REPORT OR LETTER FROM A QUALIFIED LOCAL PROFESSIONAL ENGINEER ATTESTING TO WHETHER THE ACTUAL SITE CONDITIONS MEET THE ASSUMPTIONS IDENTIFIED ABOVE.

FOR COUNCIL REVIEW ONLY

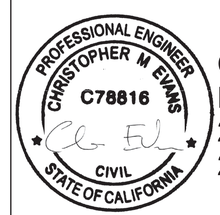

Christopher Evans
2025.11.30 20:37:30-05'00'

IF THESE DRAWINGS ARE SEALED, THE SEAL APPLIES ONLY TO BUILDING COMPONENTS DETAILED WITHIN THESE DRAWINGS AND SUPPLIED BY PORTER CORP AS WELL AS THE FOUNDATION DESIGN, IF APPLICABLE.

poligon®
WWW.POLIGON.COM
MAIN: (616) 888-3500
FIELD SUPPORT: (616) 888-3504
by PORTER CORP

PRINT DATE: 11/25/2025
SCALE: 1:12
DRAWN BY: rachel.walters
REV LEVEL: A
CREATION DATE: 11/16/2016
ORDER NO: 84619
CAD MODEL: _P23083
PROJECT: JM-51 PARK
PROJECT LOCATION: ROSEVILLE, CA
DRAWING: ANCHOR AND FOOTING DETAILS
SHEET 2.1

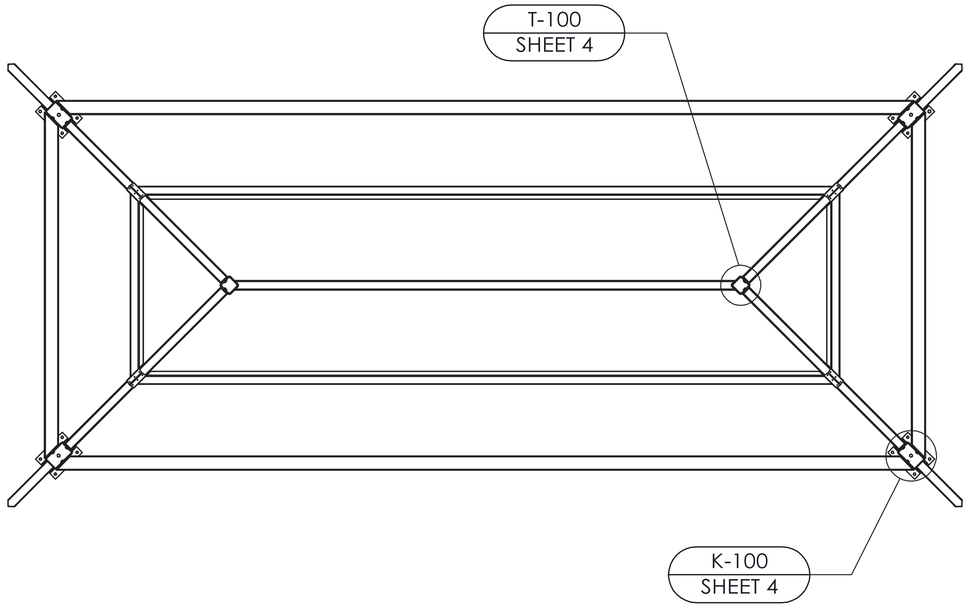

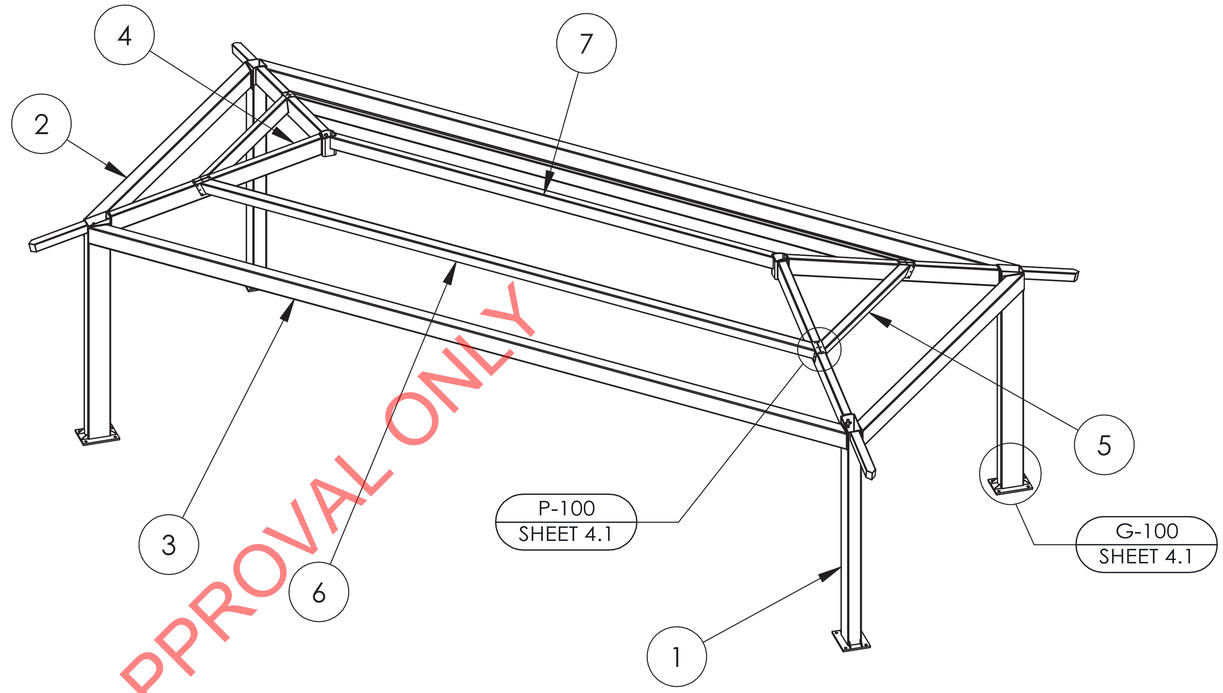

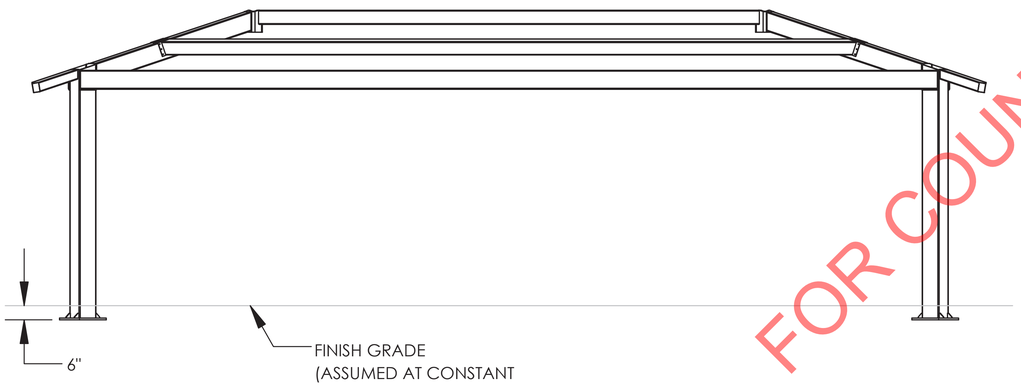

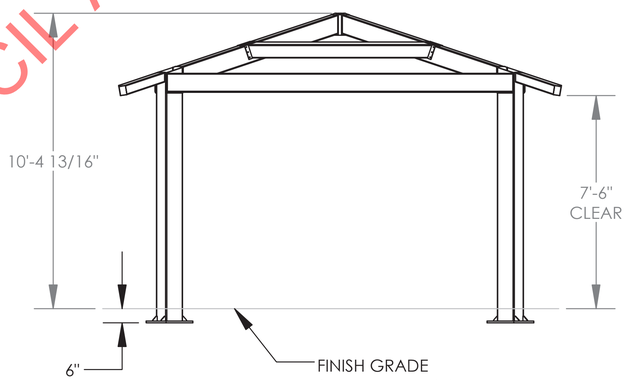

FOR COUNCIL APPROVAL ONLY

ITEM	QTY.	PART NO.	DESCRIPTION	MATERIAL SIZE	WEIGHT
7	1	-	RIDGE BEAM ASM	HSS6"X4"X3/16"	261.11
6	2	-	SIDE PURLIN 1 ASM	HSS6"X4"X3/16"	290.22
5	2	-	END PURLIN 1 ASM	HSS6"X4"X3/16"	76.04
4	4	-	TRUSS 1 ASM	HSS8"X4"X3/16"	121.18
3	2	-	SIDE TENSION MEMBER 1 ASM	HSS8"X6"X3/16"	517.19
2	2	-	END TENSION MEMBER 1 ASM	HSS8"X6"X3/16"	211.70
1	4	-	COLUMN 1 ASM	HSS10"X6"X3/16"	240.41

poligon® by PORTER CORP
WWW.POLIGON.COM
MAIN: (616) 888-3500
FIELD SUPPORT: (616) 888-3504

PRINT DATE: 11/25/2025
SCALE: 1:64
DRAWN BY: rachel.walters
REV LEVEL: A
CREATION DATE: 11/16/2016
ORDER NO: 84619
CAD MODEL: _P23083

PROJECT: JM-51 PARK
PROJECT LOCATION: ROSEVILLE, CA
DRAWING: STRUCTURAL FRAMING PLAN

SHEET 3

PROFESSIONAL ENGINEER
CHRISTOPHER M EVANS
C78816
CIVIL
STATE OF CALIFORNIA

Christopher Evans
2025.11.30 20:37:36-05'00'

IF THESE DRAWINGS ARE SEALED, THE SEAL APPLIES ONLY TO BUILDING COMPONENTS DETAILED WITHIN THESE DRAWINGS AND SUPPLIED BY PORTER CORP AS WELL AS THE FOUNDATION DESIGN, IF APPLICABLE.

NOTE:
SEE UC-100 FOR U-CLIP INSTALLATION

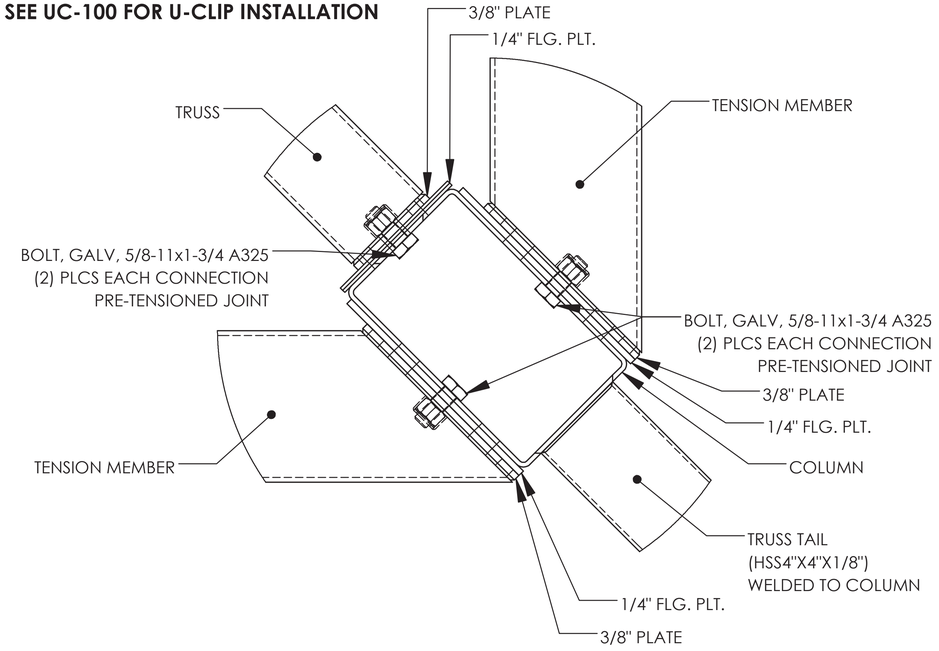

COLUMN CONNECTIONS	K-100

NOTE:
COVER PLATE
ATTACHED WITH POP RIVETS
(1P2903) (1) PER CLEAT
AT BOTTOM OF CONNECTION

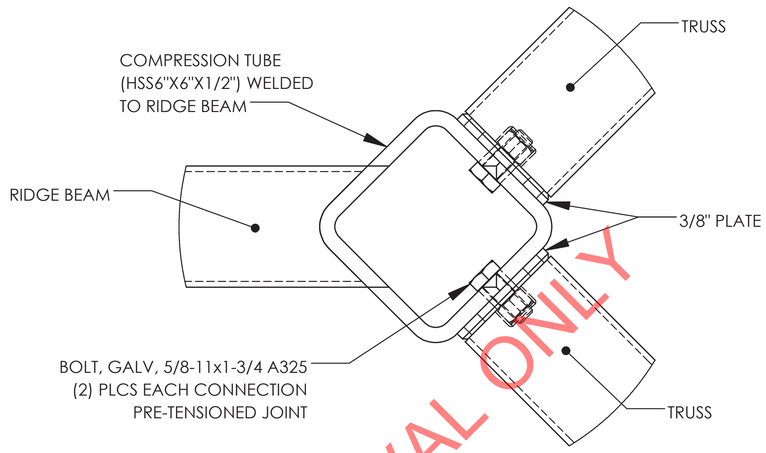

COMPRESSION MEMBER CONNECTION	T-100

TURN-OF-NUT PRETENSIONING METHOD:

THESE STEPS ILLUSTRATE THE REQUIREMENTS OUTLINED IN THE AISC SPECIFICATION. THE ROTATION INDICATED IS ACCURATE FOR MOST BOLT DIAMETERS AND LENGTHS BUT IT IS THE RESPONSIBILITY OF THE INSTALLER TO MEET AISC REQUIREMENTS.

STEP ONE:

AFTER SNUG TIGHT, MATCH MARK PLATE

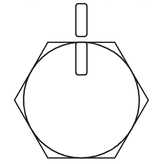

STEP TWO:

THEN TURN BOLT/NUT PAST SNUG TIGHT 1/3 TURN

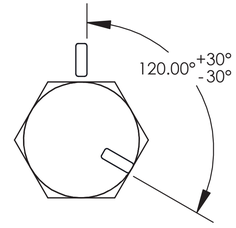

CONNECTION NOTES:

1. ALL BOLTS SHOWN ON THESE DRAWINGS ARE ASTM F3125 (A325 TYPE 1) HIGH STRENGTH BOLTS (UNO) AND SHALL BE HOT DIPPED GALVANIZED PER ASTM F2329.
2. HIGH STRENGTH NUTS SHALL CONFORM TO ASTM A563 AND SHALL BE GALVANIZED PER ASTM F2329.
3. HIGH STRENGTH WASHERS SHALL CONFORM TO ASTM F436 AND SHALL BE GALVANIZED PER ASTM F2329.
4. UNLESS A SNUG-TIGHT JOINT IS PERMITTED IN THE CONNECTION DETAIL, ALL BOLTS ARE TO BE INSTALLED BY ONE OF THE FOLLOWING PRETENSIONING METHODS AS SPECIFIED IN THE AISC "SPECIFICATION FOR STRUCTURAL JOINTS USING HIGH-STRENGTH BOLTS", SECTION 8:
   A. TURN-OF-NUT PRETENSIONING
5. THE SNUG-TIGHT CONDITION IS THE TIGHTNESS THAT IS ATTAINED WITH A FEW IMPACTS OF AN IMPACT WRENCH OR THE FULL EFFORT OF AN IRONWORKER USING AN ORDINARY SPUD WRENCH TO BRING THE CONNECTED PLIES INTO FIRM CONTACT.
6. ANCHOR BOLTS NEED NOT BE TIGHTENED PAST SNUG-TIGHT.
7. WHEN INSTALLING BOLTS REFER TO SECTIONS 8.1 AND 8.2 OF THE "SPECIFICATION FOR STRUCTURAL JOINTS USING HIGH-STRENGTH BOLTS" FOR GUIDANCE.
8. LOCAL JURISDICTIONS MAY REQUIRE AN INSPECTOR TO BE PRESENT TO WITNESS HARDWARE INSTALLATION AND INDEPENDENT TESTING. INSPECTION REQUIREMENTS SHOULD BE VERIFIED BY INSTALLER PRIOR TO STEEL ERECTION.
9. ERECTION OF THE FRAMING MEMBERS WILL REQUIRE THE MAIN COLUMNS TO BE PLUMB SQUARE AND TIGHTENED TO THE TRUSSES AND/OR TENSION MEMBERS BEFORE INSTALLING THE PURLINS. PURLINS, IF REQUIRED, MUST BE AS SHOWN IN FRAMING PLAN.
10. TEMPORARY SHORING OR BRACING SHALL BE USED TO COMPACT THE JOINTS UNTIL THE CONNECTED PLIES ARE IN FIRM CONTACT PRIOR TO PRETENSIONING.
11. ALL BOLTS MUST BE LUBRICATED WITH WAX TO ASSIST IN PROPER TIGHTENING. TO LUBRICATE A BOLT IN THE FIELD, APPLY THE WAX STICK DOWN THE LENGTH OF THE BOLT'S THREADS.
12. TO PREVENT RUST STAINING OF FINISH, ALL METAL SHAVINGS MUST BE REMOVED AFTER INSTALLATION. ENSURE NO SHAVING ARE TRAPPED BETWEEN MATING SURFACES.
13. TOUCH-UP PAINT MUST BE APPLIED TO ALL EXPOSED FASTENERS. PERIODIC TOUCH-UP AT THESE CONNECTIONS IS REQUIRED.
14. ENSURE FRAME MEMBERS WITH DRAIN HOLES NEAR THE ENDS OF TUBES ARE INSTALLED FACING UP UNLESS SPECIFIED IN THE FRAME CONNECTION DETAILS.

FOR COUNCIL APPROVAL ONLY

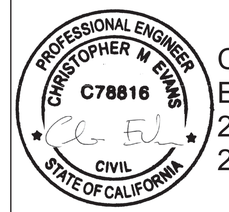

Christopher Evans
2025.11.30 20:37:42-05'00'

IF THESE DRAWINGS ARE SEALED, THE SEAL APPLIES ONLY TO BUILDING COMPONENTS DETAILED WITHIN THESE DRAWINGS AND SUPPLIED BY PORTER CORP AS WELL AS THE FOUNDATION DESIGN, IF APPLICABLE.

poligon® WWW.POLIGON.COM
by PORTER CORP MAIN: (616) 888-3500
FIELD SUPPORT: (616) 888-3504

PRINT DATE: 11/25/2025
SCALE: 1:4
DRAWN BY: rachel.walters
REV LEVEL: A
CREATION DATE: 11/16/2016
ORDER NO: 84619
CAD MODEL: _P23083
PROJECT: JM-51 PARK
PROJECT LOCATION: ROSEVILLE, CA
DRAWING: FRAME CONNECTION DETAILS
SHEET 4

NOTE:
U-CLIP MUST BE ATTACHED TO TENSION MEMBER AS SHOWN PRIOR TO BUILDING ASSEMBLY.

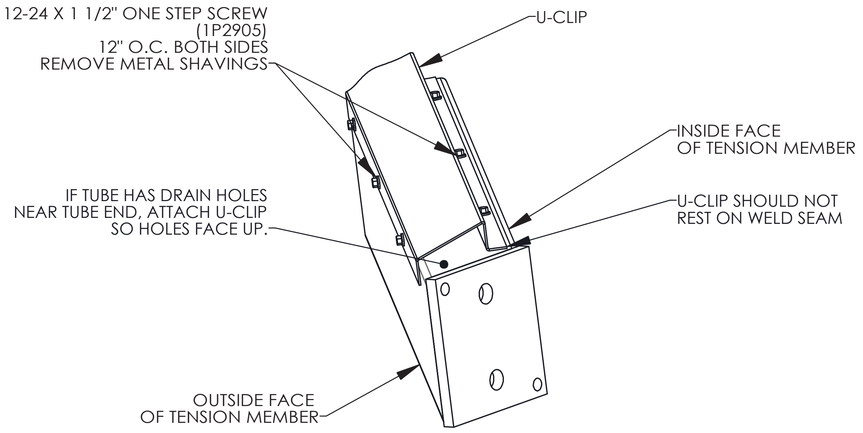

U-CLIP CONNECTION | UC-100

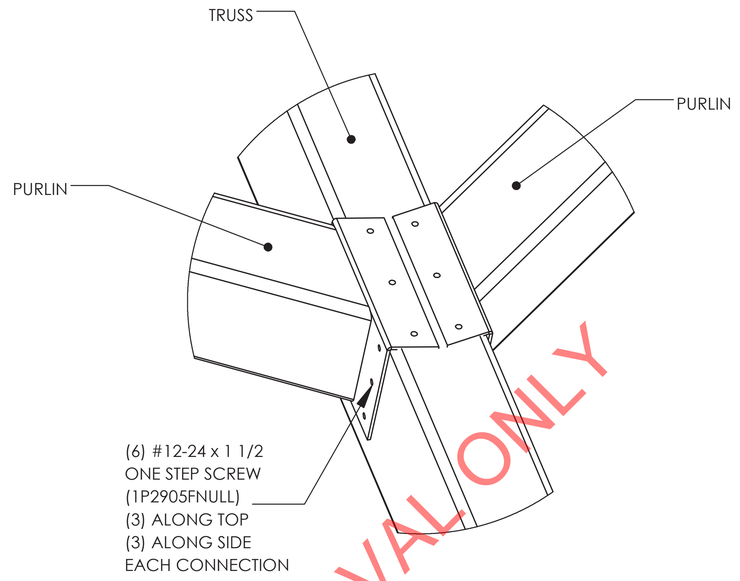

PURLIN CONNECTION | P-100

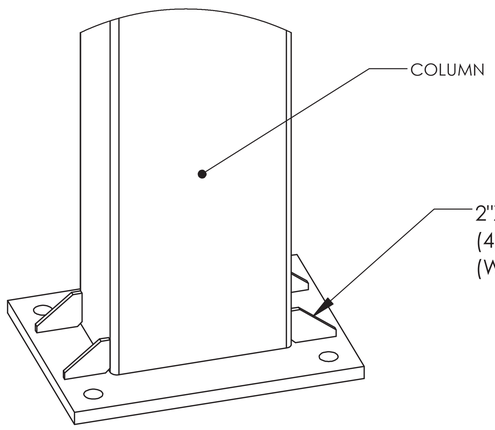

COLUMN GUSSET DETAIL | G-100

FOR COUNCIL APPROVAL ONLY

PROFESSIONAL ENGINEER
CHRISTOPHER M EVANS
C78816
CIVIL
STATE OF CALIFORNIA

Christopher Evans
2025.11.30 20:37:48-05'00'

IF THESE DRAWINGS ARE SEALED, THE SEAL APPLIES ONLY TO BUILDING COMPONENTS DETAILED WITHIN THESE DRAWINGS AND SUPPLIED BY PORTER CORP AS WELL AS THE FOUNDATION DESIGN, IF APPLICABLE.

poligon®
WWW.POLIGON.COM
MAIN: (616) 888-3500
FIELD SUPPORT: (616) 888-3504
by PORTER CORP

PRINT DATE: 11/25/2025
SCALE: 1:4
DRAWN BY: rachel.walters
REV LEVEL: A
CREATION DATE: 11/16/2016
ORDER NO: 84619
CAD MODEL: _P23083

PROJECT: JM-51 PARK
PROJECT LOCATION: ROSEVILLE, CA
DRAWING: FRAME CONNECTION DETAILS

SHEET
4.1

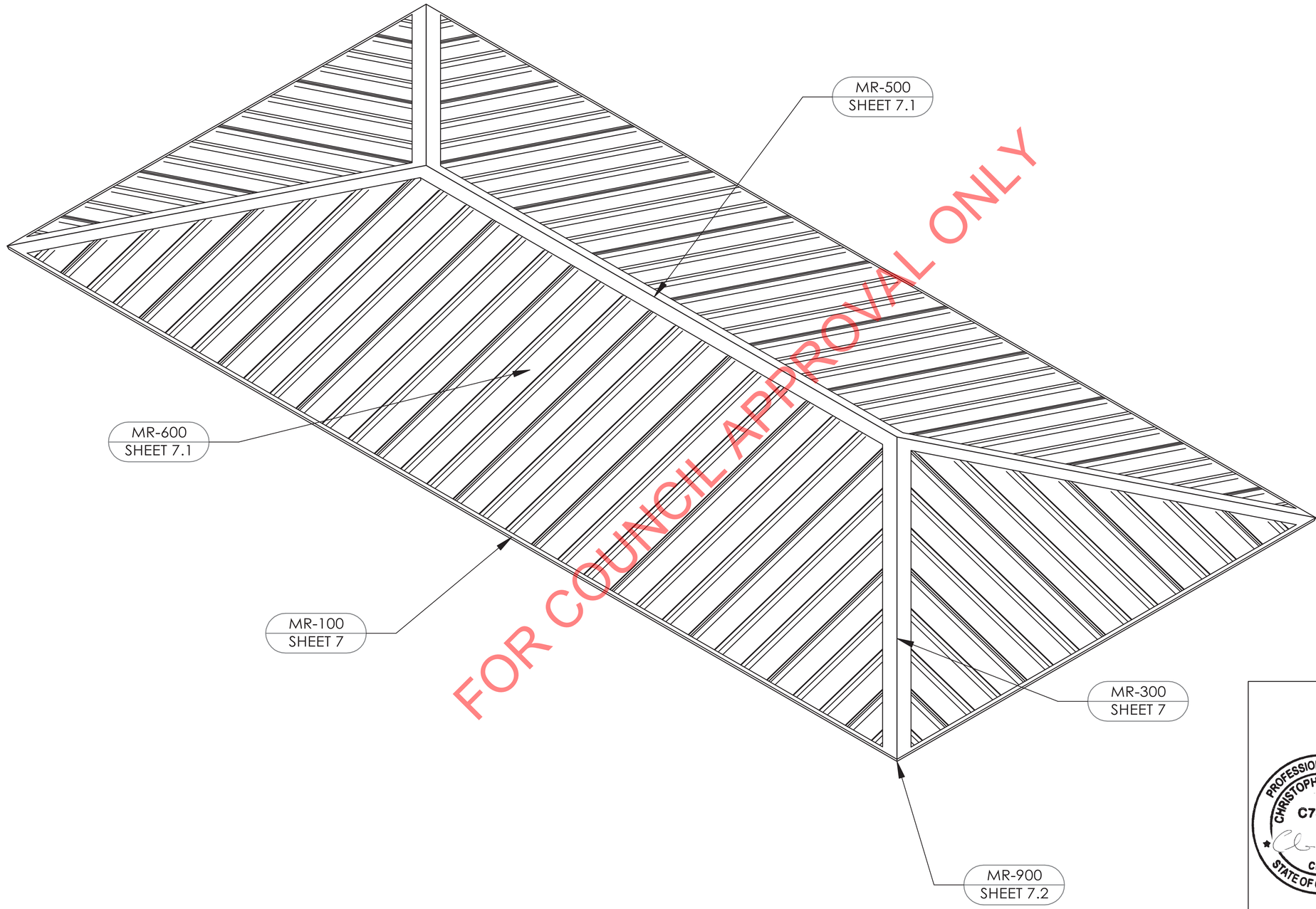

FOR COUNCIL APPROVAL ONLY

PROFESSIONAL ENGINEER
CHRISTOPHER M EVANS
C78816
CIVIL
STATE OF CALIFORNIA

Christopher Evans
2025.11.30 20:37:54-05'00'

IF THESE DRAWINGS ARE SEALED, THE SEAL APPLIES ONLY TO BUILDING COMPONENTS DETAILED WITHIN THESE DRAWINGS AND SUPPLIED BY PORTER CORP AS WELL AS THE FOUNDATION DESIGN, IF APPLICABLE.

poligon®
by PORTER CORP
WWW.POLIGON.COM
MAIN: (616) 888-3500
FIELD SUPPORT: (616) 888-3504

PRINT DATE: 11/25/2025
SCALE: 1:35
DRAWN BY: rachel.walters
REV LEVEL: A
CREATION DATE: 11/16/2016
ORDER NO: 84619
CAD MODEL: _P23083

PROJECT: JM-51 PARK
PROJECT LOCATION: ROSEVILLE, CA
DRAWING: ROOF OVERVIEW

SHEET 6

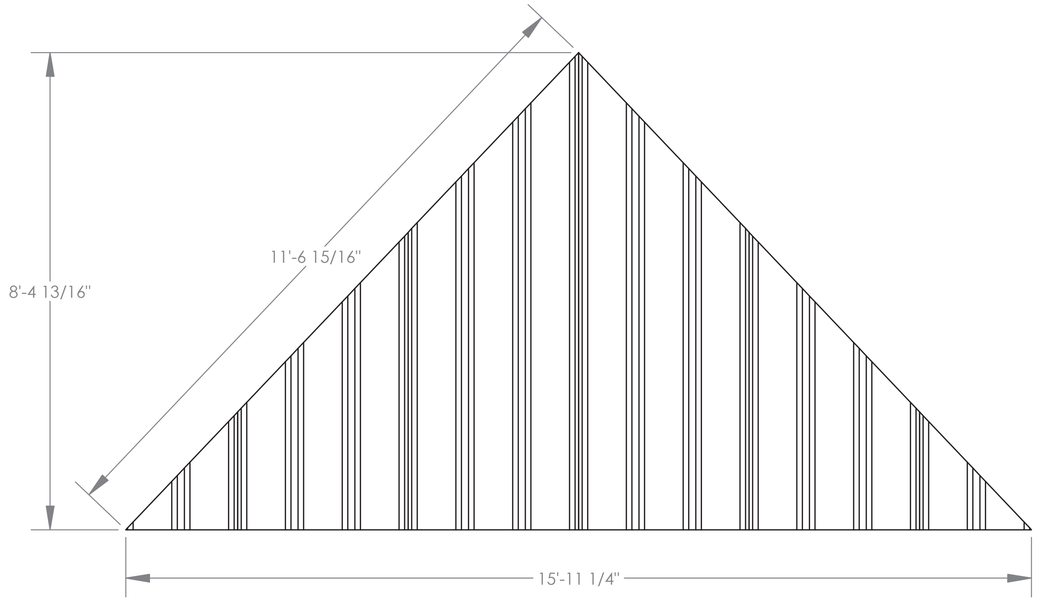

MULTI-RIB NOTES:

1. THE DETAILS SHOWN ARE SUGGESTIONS OR GUIDELINES ON HOW TO ERECT THE SYSTEMS. THE INFORMATION SHOWN IS ACCURATE, BUT IT IS NOT INTENDED TO COVER ALL INSTANCES, BUILDING REQUIREMENTS, DESIGNS OR CODES. THE DETAILS MAY REQUIRE CHANGES OR REVISIONS DUE TO FIELD CONDITIONS.
2. IT SHALL BE THE RESPONSIBILITY OF THE ERECTOR TO ENSURE THAT THE DETAILS MEET PARTICULAR BUILDING REQUIREMENTS AND TO ASSURE ADEQUATE WATER TIGHTNESS.
3. THE ERECTOR SHOULD THOROUGHLY FAMILIARIZE HIMSELF/HERSELF WITH ALL ERECTION INSTRUCTIONS BEFORE STARTING WORK.
4. THE PANELS SHOULD BE INSTALLED PLUMB, STRAIGHT, AND ACCURATELY TO THE ADJACENT WORK.
5. FLASHING AND TRIM SHALL BE INSTALLED TRUE, AND IN PROPER ALIGNMENT, WITH ANY EXPOSED FASTENERS EQUALLY SPACED FOR THE BEST APPEARANCE.
6. SEALANT SHALL BE FIELD APPLIED ON DRY, CLEAN SURFACES. SOME FIELD CUTTING AND FITTING OF PANELS AND FLASHING IS TO BE EXPECTED BY THE ERECTOR AND MINOR FIELD CORRECTIONS ARE A PART OF NORMAL ERECTION WORK.
7. WORKMANSHIP SHALL BE OF THE BEST INDUSTRY STANDARDS AND INSTALLATION SHALL BE PERFORMED BY EXPERIENCED METAL CRAFTSMEN.
8. METAL SHAVINGS FROM DRILLING OR INSTALLATION OF ROOF FASTENERS MUST BE CAREFULLY REMOVED FROM THE ROOF BY BRUSHING OR SWEEPING AT THE END OF EACH DAY DURING INSTALLATION. SHAVINGS LEFT ON THE ROOF WILL QUICKLY RUST AND STAIN THE ROOF FINISH.

FOR COUNCIL APPROVAL ONLY

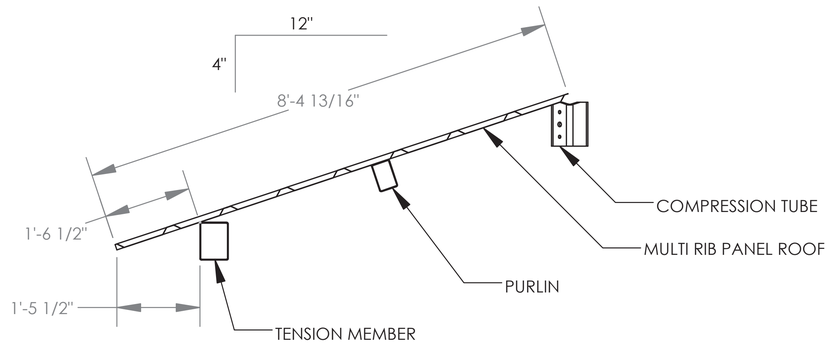

PROFESSIONAL ENGINEER
CHRISTOPHER M EVANS
C78816
CIVIL
STATE OF CALIFORNIA

Christopher Evans
2025.11.30 20:38:00-05'00'

IF THESE DRAWINGS ARE SEALED, THE SEAL APPLIES ONLY TO BUILDING COMPONENTS DETAILED WITHIN THESE DRAWINGS AND SUPPLIED BY PORTER CORP AS WELL AS THE FOUNDATION DESIGN, IF APPLICABLE.

poligon®
by PORTER CORP
WWW.POLIGON.COM
MAIN: (616) 888-3500
FIELD SUPPORT: (616) 888-3504

PRINT DATE: 11/25/2025
SCALE: 1:32
DRAWN BY: rachel.walters
REV LEVEL: A
CREATION DATE: 11/16/2016
ORDER NO: 84619
CAD MODEL: _P23083
PROJECT: JM-51 PARK
PROJECT LOCATION: ROSEVILLE, CA
DRAWING: ROOF LAYOUT

SHEET
6.1

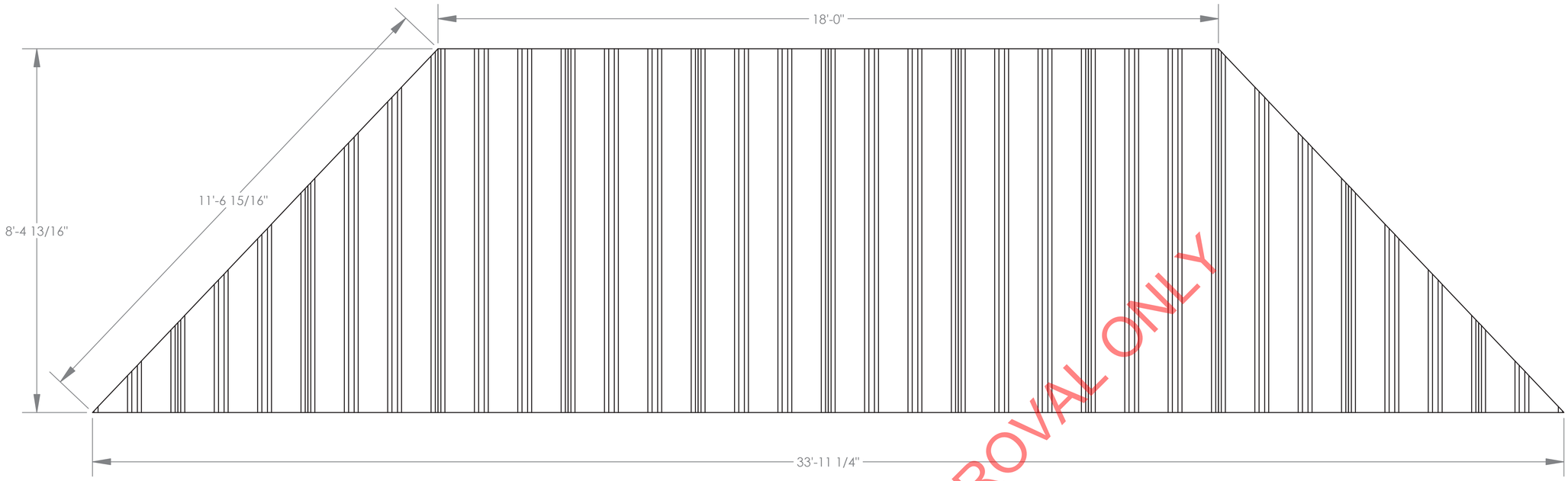

FOR COUNCIL APPROVAL ONLY

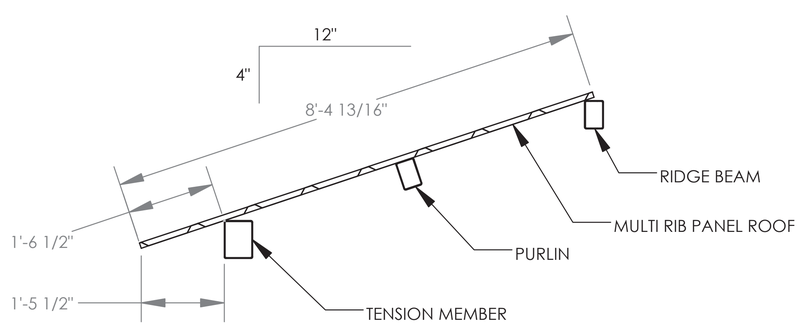

PROFESSIONAL ENGINEER
CHRISTOPHER M EVANS
C78816
CIVIL
STATE OF CALIFORNIA

Christopher Evans
2025.11.30 20:38:06-05'00'

IF THESE DRAWINGS ARE SEALED, THE SEAL APPLIES ONLY TO BUILDING COMPONENTS DETAILED WITHIN THESE DRAWINGS AND SUPPLIED BY PORTER CORP AS WELL AS THE FOUNDATION DESIGN, IF APPLICABLE.

poligon®
by PORTER CORP
WWW.POLIGON.COM
MAIN: (616) 888-3500
FIELD SUPPORT: (616) 888-3504

PRINT DATE: 11/25/2025
SCALE: 1:32
DRAWN BY: rachel.walters
REV LEVEL: A
CREATION DATE: 11/16/2016
ORDER NO: 84619
CAD MODEL: _P23083
PROJECT: JM-51 PARK
PROJECT LOCATION: ROSEVILLE, CA
DRAWING: ROOF LAYOUT
SHEET 6.2

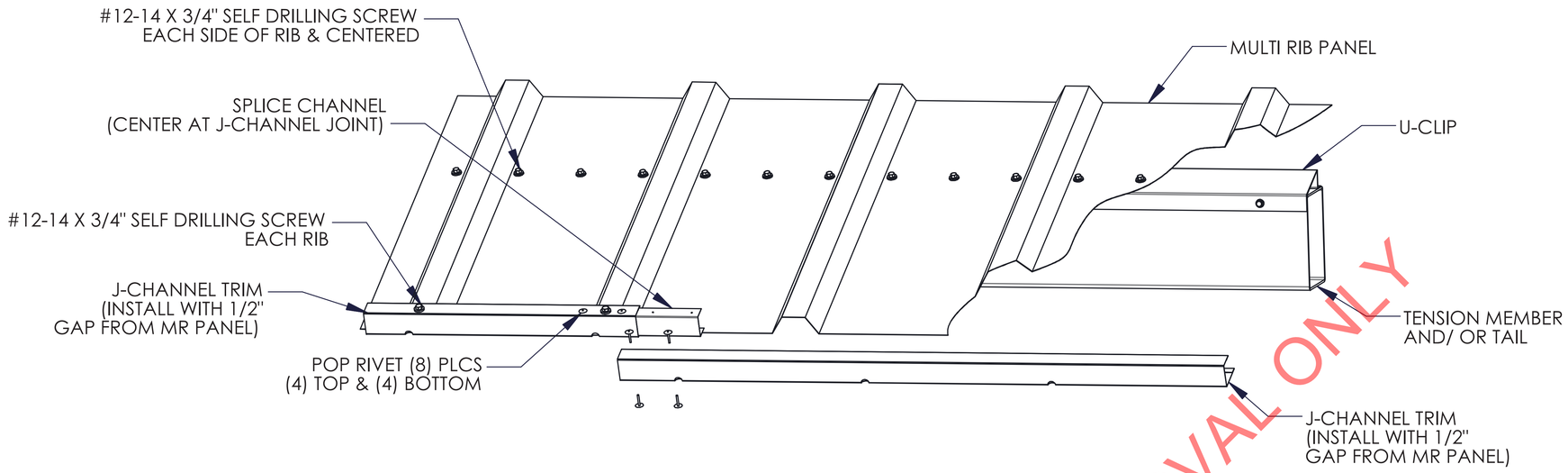

2024A | EAVE DETAIL | MR-100

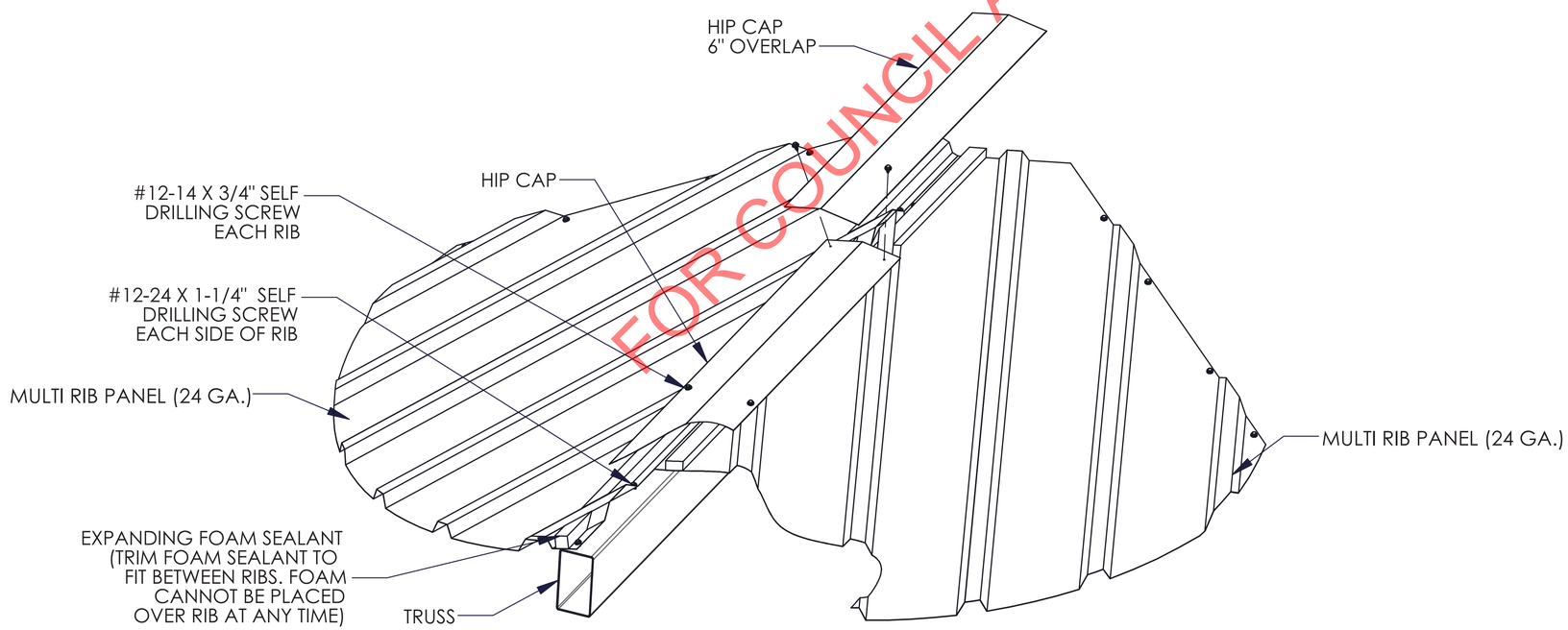

2023A | TRUSS DETAIL | MR-300

PART DESCRIPTIONS:

#12-14x3/4" SELF DRILLING SCREW.

#12-24x1 1/4" SELF DRILLING SCREW.

1/8" POP RIVET.

FOR COUNCIL APPROVAL ONLY

PROFESSIONAL ENGINEER
CHRISTOPHER M EVANS
C78816
CIVIL
STATE OF CALIFORNIA

Christopher Evans
2025.11.30 20:38:12-05'00'

IF THESE DRAWINGS ARE SEALED, THE SEAL APPLIES ONLY TO BUILDING COMPONENTS DETAILED WITHIN THESE DRAWINGS AND SUPPLIED BY PORTER CORP AS WELL AS THE FOUNDATION DESIGN, IF APPLICABLE.

poligon® by PORTER CORP
WWW.POLIGON.COM
MAIN: (616) 888-3500
FIELD SUPPORT: (616) 888-3504

PRINT DATE: 11/25/2025
SCALE: NTS
DRAWN BY: rachel.walters
REV LEVEL: A
CREATION DATE: 11/16/2016
ORDER NO: 84619
CAD MODEL: _P23083
PROJECT: JM-51 PARK
PROJECT LOCATION: ROSEVILLE, CA
DRAWING: ROOF CONNECTION DETAILS
SHEET 7

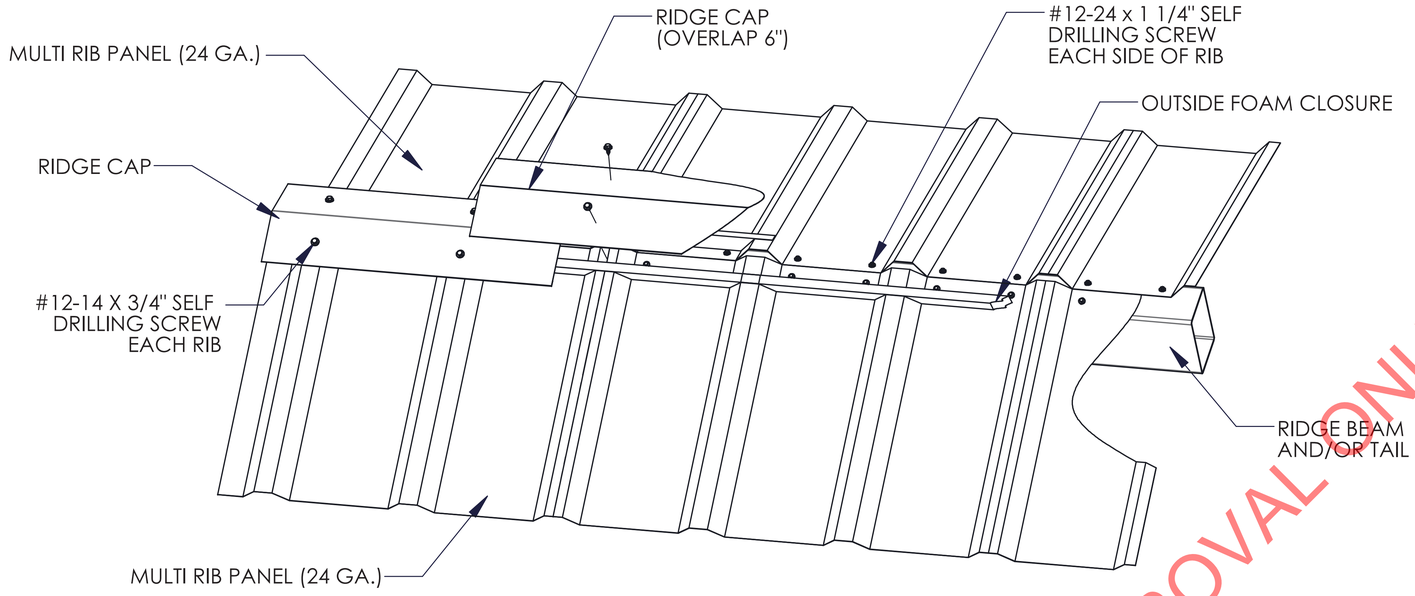

2023A | RIDGE DETAIL | MR-500

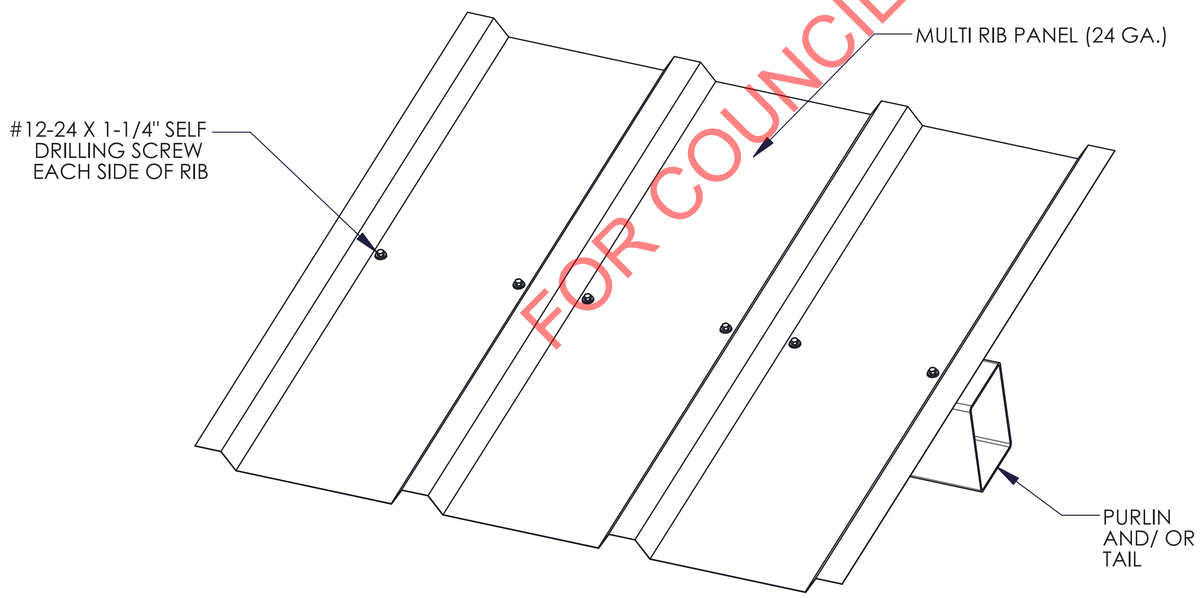

2022A | PURLIN DETAIL | MR-600

FOR COUNCIL APPROVAL ONLY

poligon®
WWW.POLIGON.COM
MAIN: (616) 888-3500
FIELD SUPPORT: (616) 888-3504
by PORTER CORP

PRINT DATE: 11/25/2025
SCALE: NTS
DRAWN BY: rachel.walters
REV LEVEL: A
CREATION DATE: 11/16/2016
ORDER NO: 84619
CAD MODEL: _P23083

PROJECT: JM-51 PARK
PROJECT LOCATION: ROSEVILLE, CA
DRAWING: ROOF CONNECTION DETAILS

PROFESSIONAL ENGINEER
CHRISTOPHER M EVANS
C78816
CIVIL
STATE OF CALIFORNIA

Christopher Evans
2025.11.30 20:38:18-05'00'

IF THESE DRAWINGS ARE SEALED, THE SEAL APPLIES ONLY TO BUILDING COMPONENTS DETAILED WITHIN THESE DRAWINGS AND SUPPLIED BY PORTER CORP AS WELL AS THE FOUNDATION DESIGN, IF APPLICABLE.

SHEET
7.1

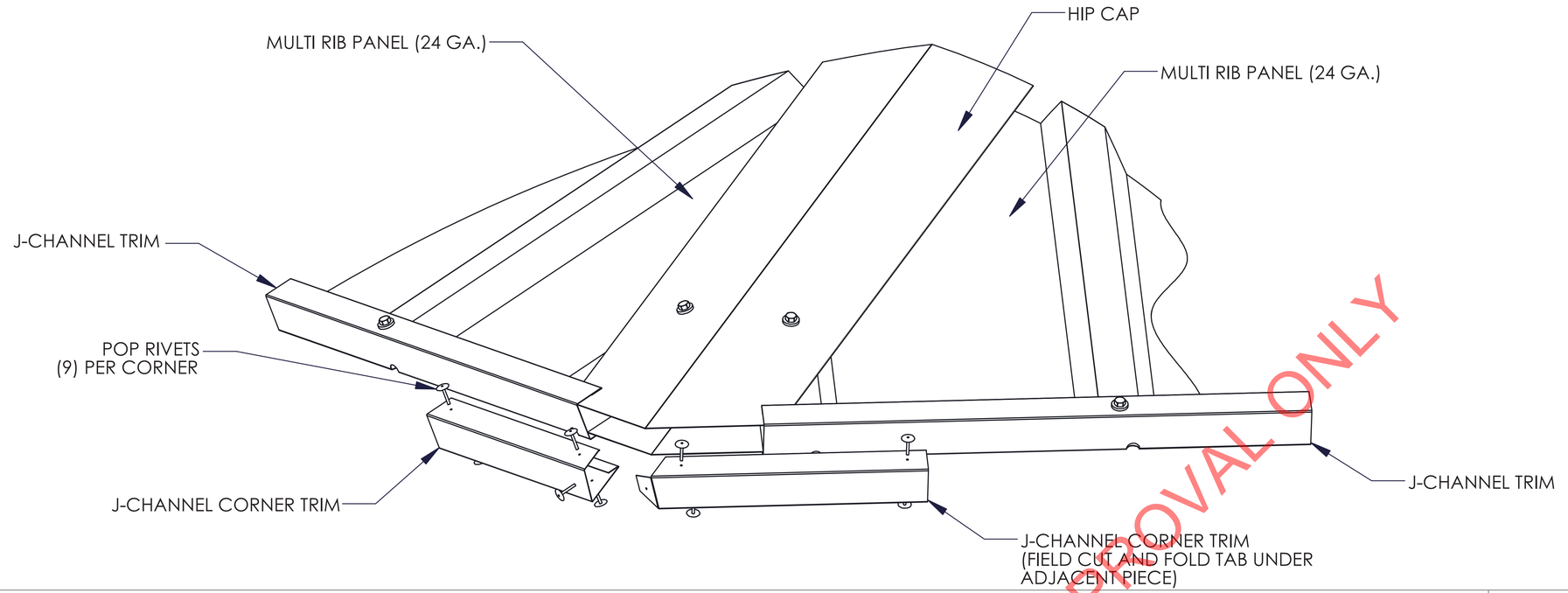

2022A

CORNER DETAIL

MR-900

FOR COUNCIL APPROVAL ONLY



Christopher Evans
2025.11.30 20:38:25-05'00'

IF THESE DRAWINGS ARE SEALED, THE SEAL APPLIES ONLY TO BUILDING COMPONENTS DETAILED WITHIN THESE DRAWINGS AND SUPPLIED BY PORTER CORP AS WELL AS THE FOUNDATION DESIGN, IF APPLICABLE.

poligon®
by PORTER CORP
WWW.POLIGON.COM
MAIN: (616) 888-3500
FIELD SUPPORT: (616) 888-3504

PRINT DATE: 11/25/2025
SCALE: NTS
DRAWN BY: rachel.walters
REV LEVEL: A
CREATION DATE: 11/16/2016
ORDER NO: 84619
CAD MODEL: _P23083

PROJECT: JM-51 PARK
PROJECT LOCATION: ROSEVILLE, CA
DRAWING: ROOF CONNECTION DETAILS

SHEET
7.2

GRADING NOTES

1. CONTRACTOR SHALL PROTECT EXISTING UTILITIES AND APPURTENANCES. ADJUST VAULT LIDS TO GRADE AS NEEDED.
2. CONTRACTOR SHALL CONSTRUCT SIDEWALK (MAX. CROSS SLOPE 2%, LONGITUDINAL SLOPE 4.9% MAX.) VERIFY SLOPE PRIOR TO POURING CONCRETE.
3. CONTRACTOR SHALL CONSTRUCT PLAZA (MAX. CROSS SLOPE 2% IN ANY DIRECTION. VERIFY SLOPE PRIOR TO POURING CONCRETE.
4. CONTRACTOR SHALL VERIFY EXISTING ELEVATIONS, ADJUST PROPOSED SIDEWALK TO MAINTAIN ACCESSIBILITY. [2]
5. CONTRACTOR SHALL CONSTRUCT ACCESSIBLE PLAY AREA RAMP PER CITY STD DTL PK-PL-1.
6. CUT IN DIRT NATURE TRAIL AT EXISTING GRADE PER CITY OF ROSEVILLE DIRECTION.
7. CONTRACTOR SHALL CONSTRUCT HALF-COURT BASKETBALL COURT PER CITY STD DTL PK-SP-7. 1% SLOPE IN ONE DIRECTION.

DRAIN CONSTRUCTION NOTES

D1 EX STORM DRAIN STUB
CONTRACTOR SHALL POTHOLE EXISTING STORM DRAIN PIPE AND VERIFY INVERT. NOTIFY ENGINEER OF DISCREPANCIES.
EXISTING IE=±118.65 (15"ø)

D2 SEE GRADING DETAIL (A C1.1)

SEWER CONSTRUCTION NOTES

S1 EX SEWER STUB
CONTRACTOR SHALL POTHOLE EXISTING SEWER PIPE AND VERIFY INVERT ELEVATION AND HORIZONTAL LOCATION. NOTIFY ENGINEER OF DISCREPANCIES.
(E) IE=±115.04 (6")
CONTRACTOR SHALL PLUG EXISTING STUB PER CITY STANDARDS.

S2 INSTALL DRINKING FOUNTAIN
PER CITY STD DTL PK-MI-1.
IE=122.64 (4"ø)

S3 INSTALL DRYWELL
NDS FLO-WELL OR APPROVED EQUAL (F C1.2)

WATER CONSTRUCTION NOTES

W1 EX DOMESTIC WATER STUB
CONTRACTOR SHALL REMOVE EXISTING BLOWOFF AND INSTALL 1" METER AND 1" BACKFLOW PER CITY STD DTL W-6.

W2 INSTALL DRINKING FOUNTAIN
PER CITY STD DTL PK-MI-1.

RECYCLED WATER CONSTRUCTION NOTES

RW1 EX RECYCLED WATER STUB
CONTRACTOR SHALL REMOVE EXISTING BLOWOFF AND INSTALL 1½" RECYCLED WATER METER PER CITY STD DTL RW-8.

FIRST ORDER OF BUSINESS

CONTRACTOR SHALL POTHOLE ALL EXISTING UTILITIES TO VERIFY EXACT LOCATION PRIOR TO CONSTRUCTION OF ANY PROPOSED UTILITIES. COORDINATE WITH CITY INSPECTOR.

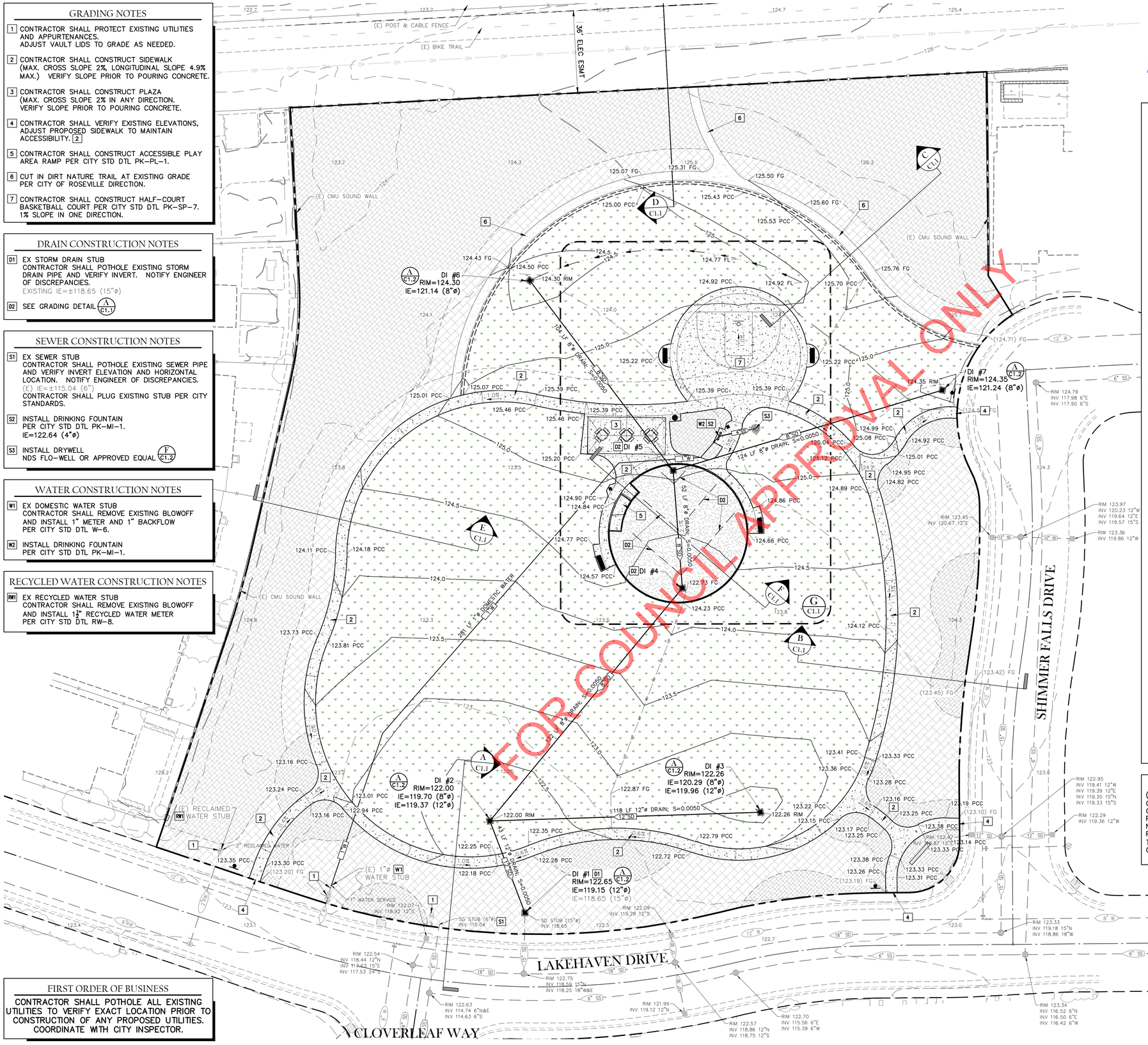

CITY GRADING NOTES

1. GRADING SHALL CONFORM TO APPENDIX CHAPTER 33 UBC, LATEST EDITION.
2. ALL EROSION AND SEDIMENT CONTROL MEASURES SHALL BE IMPLEMENTED AS SPECIFIED IN THE STORMWATER POLLUTION PREVENTION PLAN (SWPPP) FOR THIS PROJECT OR AS DETERMINED BY THE CITY INSPECTOR. THE SWPPP IS CONSIDERED A DYNAMIC DOCUMENT AND WILL CHANGE AS CONDITIONS WARRANT. PERMANENT EROSION AND SEDIMENT CONTROL MEASURES WILL BE CONSTRUCTED AS SHOWN ON THE SWPPP PLAN.
3. LOTS SHALL BE GRADED WITH A CONSTANT SLOPE ALONG THE FRONTAGE OF THE RIGHT-OF-WAY, FROM BUILDING SETBACK LINE TO BACK OF SIDEWALK. ALL TEMPORARY AND PERMANENT SLOPES STEEPER THAN 4:1 ALONG THIS FRONTAGE SHALL HAVE EROSION NETTING INSTALLED.
4. ALL REAR LOT CORNER ELEVATIONS SHALL BE EQUAL TO OR GREATER THAN THE HIGHEST ADJACENT PAD GRADE UNLESS SPECIFICALLY SHOWN ON THESE PLANS AND APPROVED BY ENGINEERING DIVISION.
5. NON-POTABLE WATER SHALL BE SPRAYED ON ALL EXPOSED EARTH SURFACES DURING CLEARING GRADING, EARTH MOVING, AND OTHER SITE PREPARATION ACTIVITIES. THE EXPOSED EARTH SHALL BE WATERED THROUGHOUT THE DAY TO MINIMIZE DUST.
6. TARPAULINS OR OTHER EFFECTIVE COVERS SHALL BE USED ON ALL STOCKPILED EARTH MATERIAL AND ON HAUL TRUCKS TO MINIMIZE DUST.
7. THE CITY SHALL HAVE THE AUTHORITY TO STOP ALL GRADING OPERATIONS, IF, IN OPINION OF CITY STAFF, INADEQUATE DUST CONTROL MEASURES ARE BEING PRACTICED OR EXCESSIVE WIND CONDITIONS CONTRIBUTE TO FUGITIVE DUST EMISSIONS.
8. ADJACENT STREET FRONTAGES SHALL BE SWEPT AT LEAST ONCE A DAY TO REMOVE SILT AND OTHER DIRT WHICH IS EVIDENT FROM CONSTRUCTION ACTIVITIES. REFER TO SCHEDULES WITHIN SWPPP.
9. THE CONTRACTOR SHALL BE RESPONSIBLE FOR CLEANING CONSTRUCTION VEHICLES LEAVING THE SITE ON A DAILY BASIS TO PREVENT DUST, SILT AND DIRT FROM BEING RELEASED OR TRACKED OFFSITE. REFER TO SWPPP FOR SPECIFIC REQUIRMENTS.
10. CONSTRUCTION SHALL STOP IF CULTURAL RESOURCES ARE SUSPECTED. IT IS POSSIBLE THAT PREVIOUS ACTIVITIES HAVE OBSCURED SURFACE EVIDENCE OF CULTURAL RESOURCES. IF SIGNS OF AN ARCHEOLOGICAL SITE, SUCH AS ANY UNUSUAL AMOUNTS OF STONE, BONE, OR SHELL, ARE UNCOVERED DURING GRADING OR OTHER CONSTRUCTION ACTIVITIES, WORK SHALL BE HALTED WITHIN 100 FEET OF THE FIND AND THE ROSEVILLE COMMUNITY DEVELOPMENT DEPARTMENT SHALL BE NOTIFIED. A QUALIFIED ARCHEOLOGIST SHALL BE CONSULTED FOR AN ON-SITE EVALUATION. THE ARCHEOLOGIST MAY REQUIRE ADDITIONAL MITIGATION.
11. SHOULD GRADING OPERATIONS UNCOVER HAZARDOUS MATERIALS, OR WHAT APPEARS TO BE HAZARDOUS MATERIALS, THE FIRE DEPARTMENT SHALL BE CONTACTED IMMEDIATELY AT (916) 774-5820. THE AREA, WHICH CONTAINS THE HAZARDOUS MATERIALS, SHALL BE MARKED OFF UNTIL AN INVESTIGATION BY A MEMBER OF THE FIRE DEPARTMENT IS CONDUCTED.
12. GRADES SHOWN OUTSIDE OF THE PUBLIC RIGHT OF WAY WITHIN THE APPROVED GRADING PLAN ARE SUBJECT TO FURTHER REVIEW AND MODIFICATION BY THE BUILDING DIVISION FOR COMPLIANCE WITH THE UNIFORM BUILDING CODE AND STATE OF CALIFORNIA TITLE 24 HANDICAP ACCESSIBILITY REQUIREMENTS.
13. THE CONTRACTOR/DEVELOPER IS EXPECTED TO COMPLY WITH THE FUGITIVE DUST CONTROL REQUIREMENTS FROM THE PLACER COUNTY AIR POLLUTION CONTROL DISTRICT: WWW.PLACER.CA.GOV/APCD
14. CONTAMINATED SOIL – DEVELOPER AGREES TO PROPERLY ADHERE TO ALL THEN CURRENT STATE AND FEDERAL REQUIREMENTS WHEN ANY EVIDENCE OF TOXIC, HAZARDOUS OR CONTAMINATED SOILS ARE ENCOUNTERED DURING ANY AND ALL EXCAVATION OR GRADING OPERATIONS, AND TO INDEMNIFY, DEFEND AND HOLD HARMLESS THE CITY OR ROSEVILLE, ITS OFFICERS, AGENTS AND EMPLOYEES, FROM ANY AND ALL LIABILITY, COSTS, CLAIMS, FEES, FINES, PENALTIES AND CLAIMS OF OR DAMAGE OF ANY TYPE WHATSOEVER. EXTRA COSTS FOR REMEDIATION AND/OR REMOVAL OF SOIL SHALL BE BOURN SOLELY BY THE DEVELOPER. THE PARTIES INTEND THAT THIS PROVISION BE BROADLY CONSTRUED.

EARTHWORK QUANTITIES

(FOLLOWING NUMBERS ARE FOR PERMITTING PURPOSES ONLY
CONTRACTOR IS RESPONSIBLE FOR THEIR OWN EARTH WORK QUANTITIES)
CUT: ±730 CU.YD.
FILL: ±680 CU.YD.
NET: ±50 CU.YD. EXPORT
PRIOR TO SITE GRADING; CONTRACTOR SHALL PROVIDE CITY INSPECTOR THE LOCATION OF THE IMPORT (OR EXPORT) SITE AND THE ASSOCIATED GRADING PERMIT FOR THE CORRESPONDING SITE.

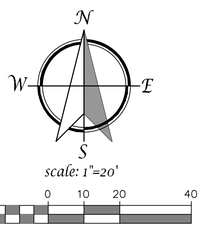

scale: 1"=20'

20 0 10 20 40

785 Orchard Drive, Suite #110
Folsom, CA 95630
Phone: (916) 608-0707
Fax: (916) 608-0701
TSD ENGINEERING, INC.
expect more.

FUHRMAN LEAMY
LAND GROUP
DESIGN • SERVICE • SOLUTIONS
3400 DOUGLAS BLVD, SUITE 275
ROSEVILLE, CALIFORNIA 95661
916.783.5263 • FLLANDGROUP.COM

JOB NO. : CRV: 25026

CITY OF ROSEVILLE APPROVAL

PROJECT:

JM-51PARK

7060 LAKEHAVEN DRIVE
ROSEVILLE, CA

CLIENT:
CITY OF ROSEVILLE

REVISIONS	DATE
△	
△	
△	
△	

ISSUE		DATE
1	1ST SUBMITTAL	9.19.2025
2	2ND SUBMITTAL	10.22.2025
3	3RD SUBMITTAL	12.03.2025
4	4TH SUBMITTAL	2.3.2026
5		

REGISTERED PROFESSIONAL ENGINEER
CASEY S. FERGUSON
No. 58930
Exp. 6-30-27
CIVIL
STATE OF CALIFORNIA

DRAWN : DJM
CHECKED : CSF
SCALE: 1" = 20'-0"

SHEET TITLE:

GRADING
& DRAINAGE PLAN

SHEET

C1.0

22 OF 40 SHEETS

FUHRMAN LEAMY LAND GROUP HEREBY EXPRESSLY RESERVES ITS COMMON LAW COPYRIGHT AND OTHER PROPERTY RIGHTS IN THESE PLANS. THESE PLANS AND DRAWINGS ARE NOT TO BE REPRODUCED, CHANGED OR COPIED IN ANY FORM OR MANNER WHATSOEVER WITHOUT FIRST OBTAINING THE EXPRESS WRITTEN PERMISSION OF FUHRMAN LEAMY LAND GROUP NOR ARE THEY TO BE ASSIGNED TO ANY THIRD PARTY WITHOUT FIRST OBTAINING WRITTEN PERMISSION AND CONSENT

FUHRMAN LEAMY LAND GROUP HEREBY EXPRESSLY RESERVES ITS COMMON LAW COPYRIGHT AND OTHER PROPERTY RIGHTS IN THESE PLANS. THESE PLANS AND DRAWINGS ARE NOT TO BE REPRODUCED, CHANGED OR COPIED IN ANY FORM OR MANNER WHATSOEVER WITHOUT FIRST OBTAINING THE EXPRESS WRITTEN PERMISSION OF FUHRMAN LEAMY LAND GROUP NOR ARE THEY TO BE ASSIGNED TO ANY THIRD PARTY WITHOUT FIRST OBTAINING WRITTEN PERMISSION AND CONSENT

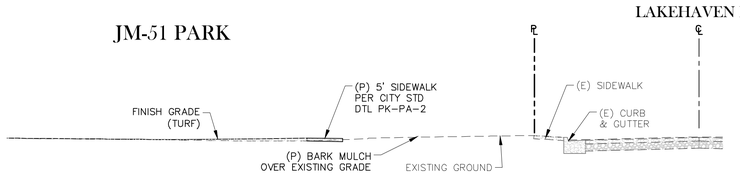

A
-
GRADING SECTION
SCALE: 1" = 10'-0"

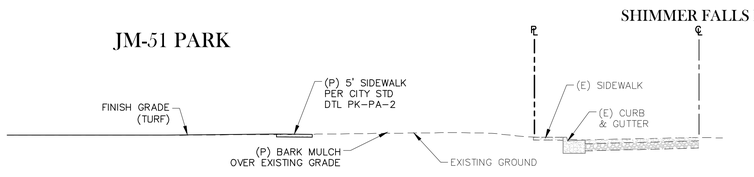

B
-
GRADING SECTION
SCALE: 1" = 10'-0"

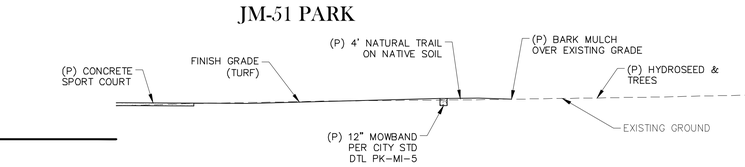

C
-
GRADING SECTION
SCALE: 1" = 10'-0"

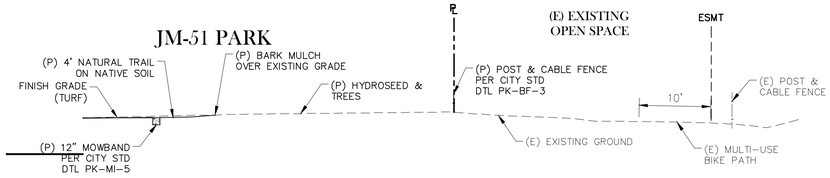

D
-
GRADING SECTION
SCALE: 1" = 10'-0"

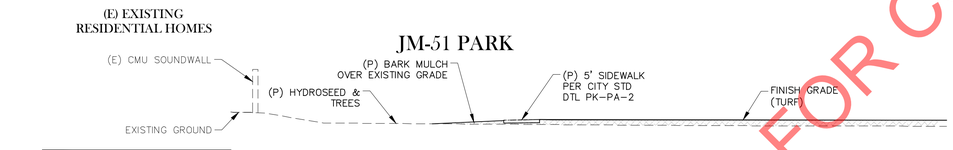

E
-
GRADING SECTION
SCALE: 1" = 10'-0"

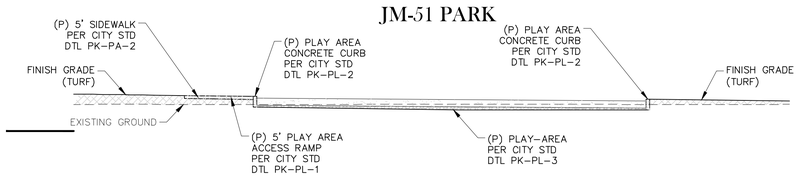

F
-
GRADING SECTION
SCALE: 1" = 10'-0"

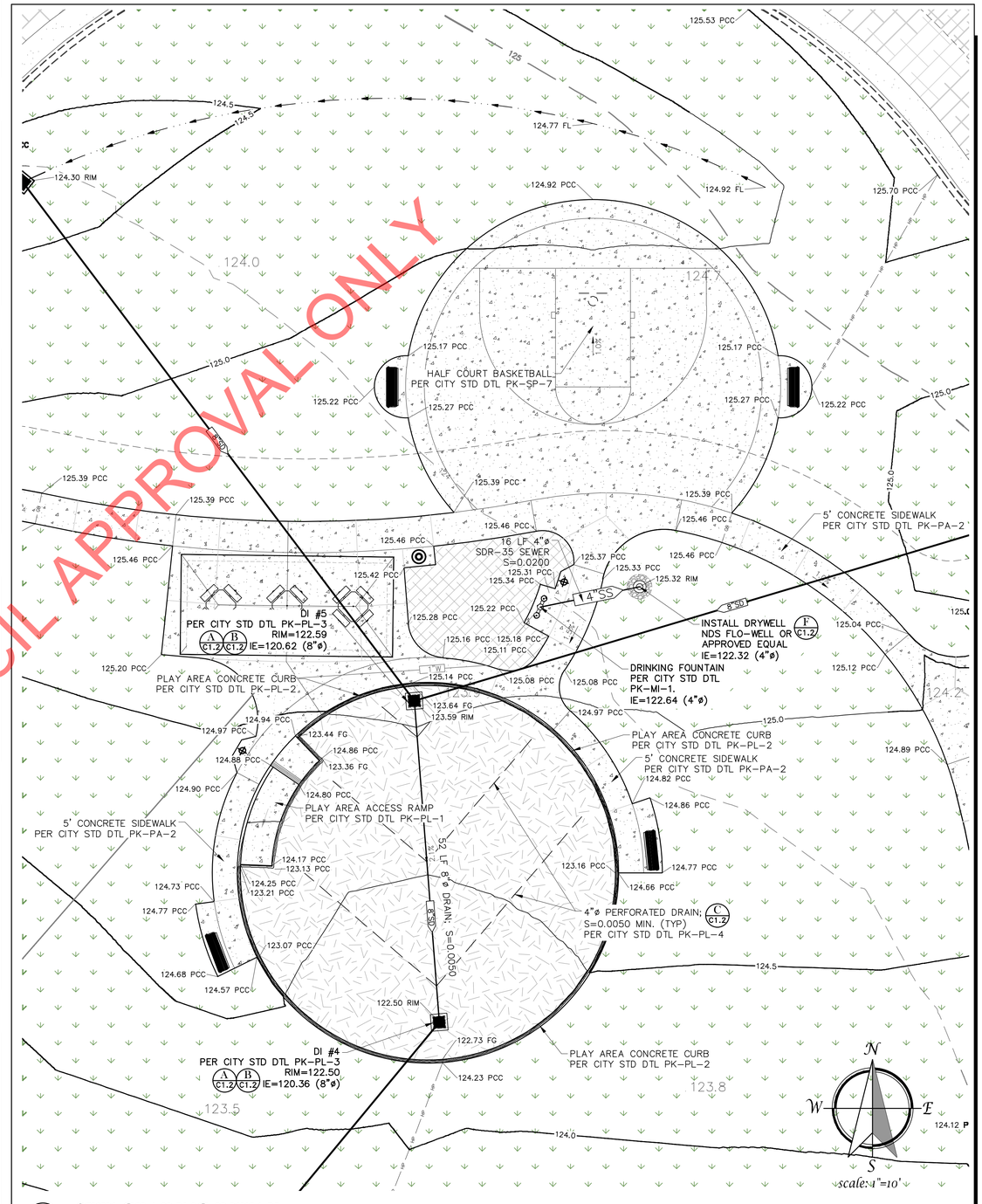

G
-
SITE GRADING DETAIL
SCALE: 1" = 10' - 0"

FOR COUNCIL APPROVAL ONLY

785 Orchard Drive, Suite #110
Folsom, CA 95630
Phone: (916) 608-0707
Fax: (916) 608-0701
TSD ENGINEERING, INC.
expect more.

FUHRMAN LEAMY
LAND GROUP
DESIGN • SERVICE • SOLUTIONS
3400 DOUGLAS BLVD, SUITE 275
ROSEVILLE, CALIFORNIA 95661
916.783.5263 • FLLANDGROUP.COM

JOB NO. : CRV: 25026

CITY OF ROSEVILLE APPROVAL

PROJECT:

JM-51PARK

7060 LAKEHAVEN DRIVE
ROSEVILLE, CA

CLIENT:
CITY OF ROSEVILLE

REVISIONS	DATE
△	
△	
△	
△	

ISSUE		DATE
1	1ST SUBMITTAL	9.19.2025
2	2ND SUBMITTAL	10.22.2025
3	3RD SUBMITTAL	12.03.2025
4	4TH SUBMITTAL	2.3.2026
5		

REGISTERED PROFESSIONAL ENGINEER
GEOFF S. TESTORF
No. 58930
Exp. 6-30-27
CIVIL
STATE OF CALIFORNIA

DRAWN : DJM
CHECKED : CSF
SCALE: : 1" = 10'-0"

SHEET TITLE:
GRADING
DETAILS & SECTIONS

SHEET
C1.1
23 OF 40 SHEETS

FUHRMAN LEAMY LAND GROUP HEREBY EXPRESSLY RESERVES ITS COMMON LAW COPYRIGHT AND OTHER PROPERTY RIGHTS IN THESE PLANS. THESE PLANS AND DRAWINGS ARE NOT TO BE REPRODUCED, CHANGED OR COPIED IN ANY FORM OR MANNER WHATSOEVER WITHOUT FIRST OBTAINING THE EXPRESS WRITTEN PERMISSION OF FUHRMAN LEAMY LAND GROUP NOR ARE THEY TO BE ASSIGNED TO ANY THIRD PARTY WITHOUT FIRST OBTAINING WRITTEN PERMISSION AND CONSENT

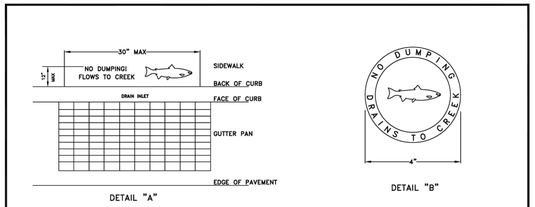

DETAIL "A"

DETAIL "B"

RHON HERNDON
PUBLIC WORKS DIRECTOR

NOTES:

1. DETAIL "A" LETTERING SHALL BE 1 1/4 TO 1 1/2 INCHES HIGH. THE MESSAGE AND SYMBOL SHALL BE DEPRESSED 1/8 TO 1/4 INCH INTO THE CONCRETE. THE FISH SYMBOL SHALL BE A MINIMUM OF 11 INCHES LONG AND 3 1/2 INCHES HIGH.
2. DETAIL "A" SHALL BE PRE APPROVED BY THE CONSTRUCTION INSPECTOR PRIOR TO ITS USE.
3. DETAIL "A" SHALL APPLY TO ALL DRAIN INLET DESIGNS. WHERE THE SIDEWALK DOES NOT ADJOIN THE BACK OF CURB, THE NOTICE SHALL BE STAMPED IN THE CONCRETE BACKUP, BEHIND THE DRAIN INLET. WHERE THE DRAIN INLET IS PLACED IN A "V" GUTTER WITHOUT A CURB INLET, THE NOTICE SHALL BE STAMPED ON ONE SIDE OR THE OTHER, PARALLEL TO THE LENGTH OF THE INLET.
4. DETAIL "B" MAY BE PLACED WHERE DETAIL "A" DOES NOT WARRANT INSTALLATION AT THE DISCRETION OF THE PUBLIC WORKS CONSTRUCTION INSPECTOR. SEE DRAINAGE SECTION 101-8 OF THE DESIGN AND CONSTRUCTION STANDARDS FOR SPECIFICATIONS.
5. THE MESSAGE SHALL BE FREE OF BLEMISHES, LEGIBLE AND ACCEPTABLE TO THE CONSTRUCTION INSPECTOR.

CITY OF ROSEVILLE CALIFORNIA — DEPARTMENT OF PUBLIC WORKS

"NO DUMPING"
PUBLIC NOTICE

SCALE: NONE
REVISED: JANUARY 1, 2010
DRAWN BY: J MCKINNEY
APPROVED BY: RHON HERNDON

DR-20

NOTES:

- ALL NEW AND REPLACEMENT STORM DRAIN INLETS ON THE PUBLIC RIGHT OF WAY, PRIVATE PROPERTY AND DRAINAGE EASEMENTS SHALL INCLUDE A "NO DUMPING – DRAINS TO CREEK" CONCRETE STAMP OR OTHER APPROVED EPOXY AFFIXED PERMANENT MARKER ON THE CURB ADJACENT TO THE DRAINAGE INLET. PER CITY STD DTL DR-20

A - DRAINAGE INLET (DI)
NOT TO SCALE

DROP INLET			
MODEL NO.	A	B	*WEIGHT
DI242436	36"	42"	1900 LBS.
DI242448	48"	54"	2500 LBS.

*BOX ONLY

FRAME AND GRATE			
MODEL NO.	RATING	D	WEIGHT
SG2424-DIP	PEDESTRIAN	1 1/2"	41 LBS.
SG2424-DIT	TRAFFIC	3"	120 LBS.

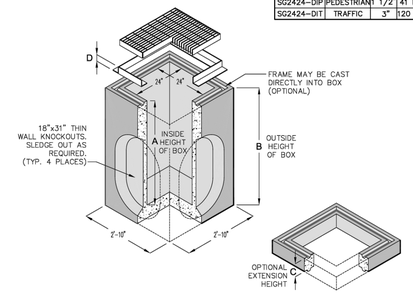

EXTENSION		
MODEL NO.	C	WEIGHT
RS242406	6"	300 LBS.
RS242412	12"	600 LBS.

- FRAME AND GRATE ASSEMBLY AVAILABLE IN TRAFFIC OR PEDESTRIAN MODELS.
- DESIGN FOR H-20-44 BRIDGE LOADING.
- ASSEMBLY TO BE PLACED ON A 6" BASE OF CRUSHER RUN FOR EASE OF INSTALLATION AND EVEN LOAD DISTRIBUTION.
- FOR COMPLETE DESIGN AND PRODUCT INFORMATION, CONTACT JENSEN PRECAST.
- ILLUSTRATION IS TYPICAL ONLY OF GENERAL SERIES CONFIGURATION; FOR SPECIFIC CONFIGURATION, CALL JENSEN PRECAST.

24" X 24" DRAIN INLET

JENSEN PRECAST

DI2424

APPD. JENSEN DATE: 11-28-00 | APPD. JENSEN DATE:

8.01

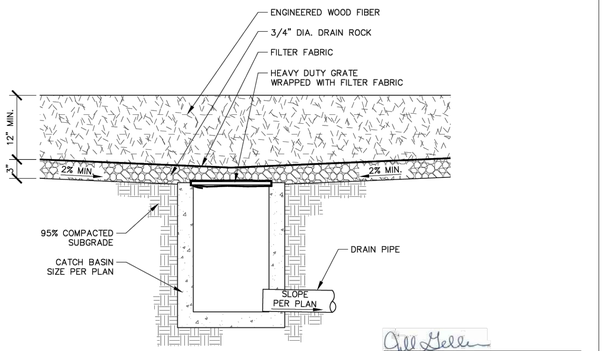

JILL GELLER, CPRE
PARKS, RECREATION & LIBRARIES DIRECTOR

CITY OF ROSEVILLE CALIFORNIA — PARKS, RECREATION, & LIBRARIES DEPARTMENT

PLAY AREA DRAIN

SCALE: NONE
REVISED: JULY 2025
REVIEWED BY: T. GEE
APPROVED BY: J. GELLER

PK-PL-3

B - PLAY AREA DRAIN DETAIL
NOT TO SCALE

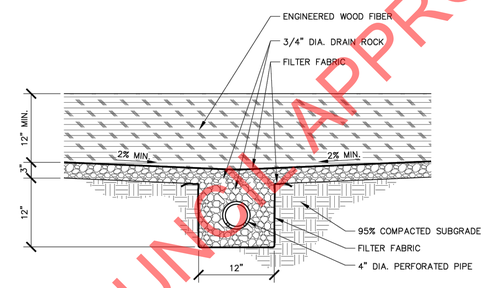

NOTES
1. PERFORATED PIPE SHALL BE LAID IN A HERRINGBONE PATTERN AND CONNECTED TO A DRAIN INLET.
2. LOCATE ALL CLEAN OUTS OUTSIDE PLAY AREA WITHIN PLANTING/TURF AREAS.

JILL GELLER, CPRE
PARKS, RECREATION & LIBRARIES DIRECTOR

CITY OF ROSEVILLE CALIFORNIA — PARKS, RECREATION, & LIBRARIES DEPARTMENT

PLAY AREA PERFORATED PIPE DRAIN

SCALE: NONE
REVISED: JULY 2025
REVIEWED BY: T. GEE
APPROVED BY: J. GELLER

PK-PL-4

C - PLAY AREA PERFORATED DRAIN DETAIL
NOT TO SCALE

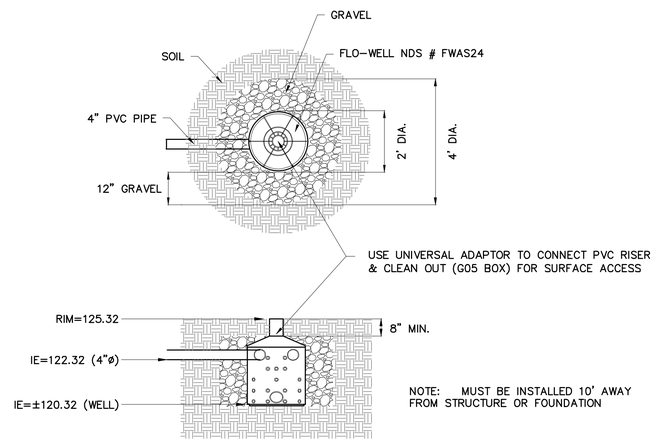

D - NDS FLO-WELL INSTALLATION DETAIL
NOT TO SCALE

NDS

FOR COUNCIL APPROVAL ONLY

785 Orchard Drive, Suite #110
Folsom, CA 95630
Phone: (916) 608-0707
Fax: (916) 608-0701
TSD ENGINEERING, INC.
expect more.

FUHRMAN LEAMY
LAND GROUP
DESIGN • SERVICE • SOLUTIONS
3400 DOUGLAS BLVD, SUITE 275
ROSEVILLE, CALIFORNIA 95661
916.783.5263 • FLLANDGROUP.COM

JOB NO. : CRV: 25026

CITY OF ROSEVILLE APPROVAL

PROJECT:

JM-51PARK

7060 LAKEHAVEN DRIVE
ROSEVILLE, CA

CLIENT:
CITY OF ROSEVILLE

REVISIONS	DATE
△	
△	
△	
△	

ISSUE		DATE
1	1ST SUBMITTAL	9.19.2025
2	2ND SUBMITTAL	10.22.2025
3	3RD SUBMITTAL	12.03.2025
4	4TH SUBMITTAL	2.3.2026
5		

REGISTERED PROFESSIONAL ENGINEER — CASEY S. FELCHER — No. 58930 — Exp. 6-30-27 — CIVIL — STATE OF CALIFORNIA

DRAWN : DJM
CHECKED : CSF
SCALE: : 1" = 10'-0"

SHEET TITLE:

UTILITY DETAILS

SHEET

C1.2

24 OF 40 SHEETS

EROSION CONTROL LEGEND

- LANDSCAPE AREA
- TURF AREA
- PCC PAVING AREA
- MAINTAIN NATIVE STABALIZED VEGETATION UNTIL READY FOR FINAL HYDROSEED
- DROP INLET
- SWALE
- LIMIT OF DISTURBANCE [1]
- FIBER ROLL [2]
- DRAIN INLET PROTECTION

EROSION CONTROL NOTES

[1] LIMIT OF DISTURBANCE. CONTRACTOR SHALL NOT DISTURB EXISTING VEGETATION OUTSIDE THESE LIMIT UNTIL SITE WORK IS COMPLETE. REFERENCE CASQA EC-2 FOR DETAILS

[2] PLACE FIBER ROLL AT LIMITS OF GRADING. REFERENCE CASQA SE-5 FOR DETAILS

[3] CONTRACTOR SHALL PROTECT STORM DRAIN INLETS. REFERENCE CASQA SE-10 FOR DETAILS

[4] INSTALL STABALIZED CONSTRUCTION ENTRANCE. REFERENCE CASQA TC-1 FOR DETAILS

1. EVERY FRIDAY AFTERNOON, THE ENTIRE STREET(S) FRONTAGE SHALL BE CLEANED AND PICKED UP WITH A STREET SWEEPER.
2. ADDITIONAL EROSION CONTROL METHODS MAY BE REQUIRED BY THE CITY OF ROSEVILLE & CASQA.
3. PLEASE REFERENCE SWPPP PLAN FOR DETAILED EROSION CONTROL METHODS.

EROSION CONTROL SCHEDULE

1. THE BMP INSPECTOR SHOULD INSPECT THE SITE ON A WEEKLY BASIS, AND BEFORE, DURING, AND AFTER ANY STORM GENERATING RUNOFF TO DETERMINE MAINTENANCE REQUIREMENTS AND GENERAL CONDITIONS OF THE INSTALLED SYSTEM. THE LOCAL AGENCY MAY ALSO INSPECT THE SITE ON A ROUTINE BASIS TO ASSESS THE MAINTENANCE PERFORMED ON THE SYSTEMS. ALL MAINTENANCE RELATED TO A STORM EVENT SHOULD BE COMPLETED WITHIN FORTY-EIGHT (48) HOURS OF THE STORM EVENT. THE FOLLOWING MAINTENANCE TASKS SHOULD BE PERFORMED ON A REGULAR BASIS:

A) REMOVAL OF SEDIMENT FROM BARRIERS AND SEDIMENTATION DEVICES.
B) REPLACEMENT OR REPAIR OF WORN OR DAMAGED SILT FENCE FABRICS.
C) REPLACEMENT OR REPAIR OF DAMAGED STRUCTURAL CONTROLS.
D) REPAIR OF DAMAGED SOIL STABILIZATION MEASURES.
E) OTHER CONTROL MAINTENANCE AS DEFINED IN EACH BMP FACT SHEET.

2. PRIOR TO A RAIN EVENT, OR IF AN AREA WILL NOT BE ACTIVELY WORKED ON WITHIN 14 DAYS, ALL DISTURBED OR EXPOSED SOILS SHALL BE PROTECTED, AT A MINIMUM, WITH A HYDROSEED/STRAW MULCH TACKIFIER 3-STEP APPLICATION, FIRST, A LAYER OF HYDROSEED CONSISTING OF NATIVE GRASSES OR TURF SEED WITH FERTILIZER SHALL BE EVENLY DISTRIBUTED ON DISTURBED AREA. THEN APPLY A LAYER OF STRAW MULCH IN PLACE. THIS IS A MINIMUM GUIDE ONLY. CONTRACTOR IS RESPONSIBLE FOR DETERMINING AND INSTALLING THE APPROPRIATE LEVEL OF EROSION AND SEDIMENT CONTROL.

3. PLAN SHOWN IS A BASIC DESIGN & FOR EROSION CONTROL BMP'S CONTRACTOR SHALL MODIFY WITH ASSISTANCE OF QSD/QSP BASED ON SITE CONDITIONS, PROJECT SCHEDULING PHASE OF CONSTRUCTION, TIME OF YEAR, AND APPROXIMATE RAINFALL EVENTS.

SWPPP NOTE:

EROSION CONTROL PLAN AND ASSOCIATED NOTES AND DETAILS HAVE BEEN PROVIDED FOR PERMITTING PURPOSES ONLY. CONTRACTOR SHALL IMPLEMENT/ INSTALL/ COORDINATE PER SWPPP & WDID# APPROVED BY THE STATE WATER RESOURCES CONTROL BOARD PRIOR TO THE INSTALLATION, MAINTENANCE AND REMOVAL OF EROSION AND SEDIMENT CONTROL DEVICES AND/OR BMP'S

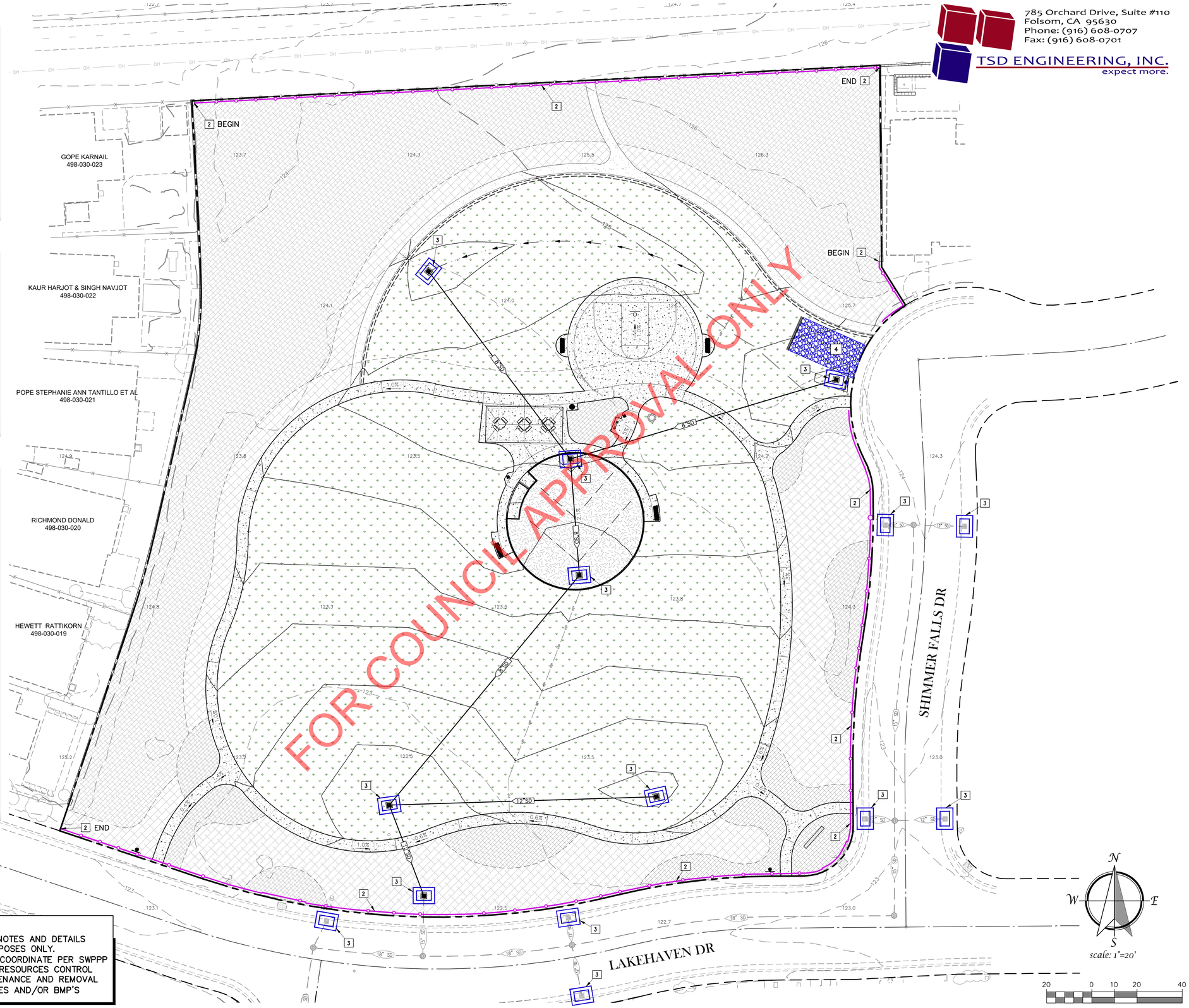

785 Orchard Drive, Suite #110
Folsom, CA 95630
Phone: (916) 608-0707
Fax: (916) 608-0701
TSD ENGINEERING, INC.
expect more.

FUHRMAN LEAMY
LAND GROUP
DESIGN • SERVICE • SOLUTIONS

3400 DOUGLAS BLVD, SUITE 275
ROSEVILLE, CALIFORNIA 95661
916.783.5263 • FLLANDGROUP.COM

JOB NO. : CRV: 25026

CITY OF ROSEVILLE APPROVAL

PROJECT:

JM-51PARK

7060 LAKEHAVEN DRIVE
ROSEVILLE, CA

CLIENT:
CITY OF ROSEVILLE

REVISIONS	DATE
1	
2	
3	
4	

ISSUE		DATE
1	1ST SUBMITTAL	9.19.2025
2	2ND SUBMITTAL	10.22.2025
3	3RD SUBMITTAL	12.03.2025
4	4TH SUBMITTAL	2.3.2026
5		

REGISTERED PROFESSIONAL ENGINEER
CHRISTOPHER S. FELTON
No. 58930
Exp. 6-30-27
CIVIL
STATE OF CALIFORNIA

DRAWN : DJM
CHECKED : CSF
SCALE: : 1" = 20'-0"

SHEET TITLE:

EROSION CONTROL PLAN

SHEET

C2.0

25 OF 40 SHEETS

FUHRMAN LEAMY LAND GROUP HEREBY EXPRESSLY RESERVES ITS COMMON LAW COPYRIGHT AND OTHER PROPERTY RIGHTS IN THESE PLANS. THESE PLANS AND DRAWINGS ARE NOT TO BE REPRODUCED, CHANGED OR COPIED IN ANY FORM OR MANNER WHATSOEVER WITHOUT FIRST OBTAINING THE EXPRESS WRITTEN PERMISSION OF FUHRMAN LEAMY LAND GROUP NOR ARE THEY TO BE ASSIGNED TO ANY THIRD PARTY WITHOUT FIRST OBTAINING WRITTEN PERMISSION AND CONSENT

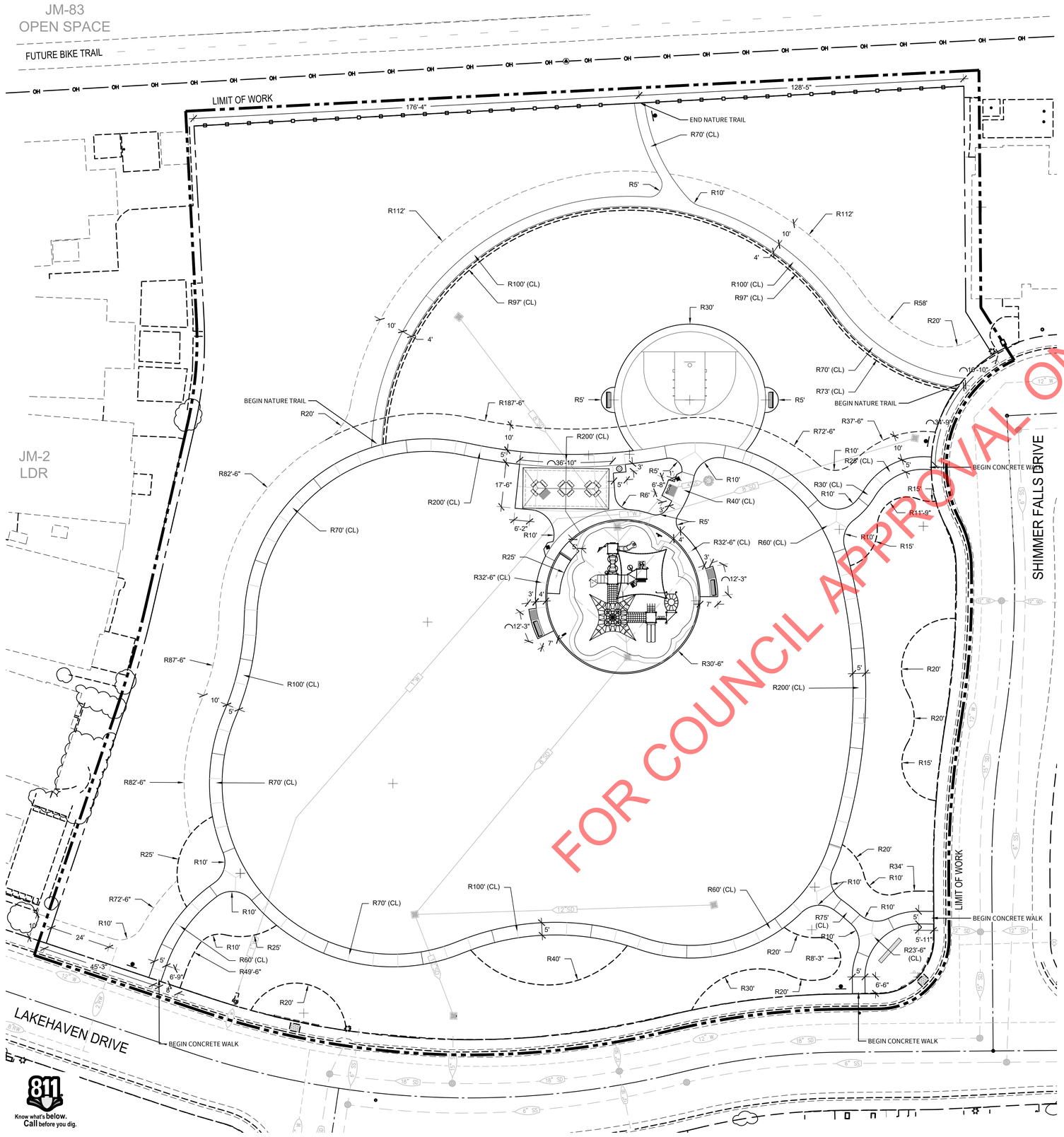

811 Know what's below. Call before you dig.

GENERAL LAYOUT NOTES

1. ALL DIMENSIONS ARE TO FACE OF WALLS, STAIRS, CURB AND EDGE OF CONCRETE WALKS, UNLESS OTHERWISE NOTED ON PLANS.
2. EXPANSION JOINTS AND SCORE LINES SHALL BE PLACED AS SHOWN ON PLAN. DESIRED MODULE IS 5'X5'. BRING TO THE PROJECT MANAGER'S ATTENTION IF ANY DEVIATIONS OCCUR DURING LAYOUT.
3. NEW CONCRETE FLATWORK FINISH SURFACE SHALL MEET FLUSH WITH EXISTING CONCRETE FLATWORK.
4. CONSTRUCT ALL CURVILINEAR SITE ELEMENTS WITH SMOOTH, CONTINUOUS, UNBROKEN CURVES.
5. MAINTAIN EXISTING GRADE AT THE BASE OF ALL EXISTING TREES WITHIN THE TREE DRIP LINE.
6. REFER TO IRRIGATION PLANS FOR LOCATIONS OF SLEEVES PRIOR TO THE START OF CONSTRUCTION.
7. UTILITIES ARE SHOWN FOR REFERENCE ON THESE PLANS. VERIFY ALL LOCATIONS PRIOR TO CONSTRUCTION. BRING TO PROJECT MANAGER'S ATTENTION IF THERE ARE ANY DISCREPANCIES BETWEEN DOCUMENTS AND FIELD CONDITION.
8. FINAL NATURE TRAIL ALIGNMENT TO BE CONFIRMED IN THE FIELD BY CITY PARKS STAFF.

NOTE

CONTRACTOR SHALL NOTIFY PROJECT MANAGER WHEN FIELD STAKING IS PLANNED TO OCCUR. LANDSCAPE ARCHITECT WILL PROVIDE ELECTRONIC FILES TO STAKING CONTRACTOR WHEN REQUESTED. SITE COMPONENTS SHALL BE LOCATED AND STAKED USING DIGITAL COORDINATES.

SCALE: 1" = 20'-0"

0' 20' 80'
10' 40'

FUHRMAN LEAMY
LAND GROUP
DESIGN • SERVICE • SOLUTIONS

3400 DOUGLAS BLVD., SUITE 275
ROSEVILLE, CALIFORNIA 95661
916.783.5263 • FLLANDGROUP.COM

JOB NO. : CRV- 25026

CITY OF ROSEVILLE APPROVAL

PROJECT:

JM-51PARK

7060 LAKEHAVEN DRIVE
ROSEVILLE, CA

CLIENT:
CITY OF ROSEVILLE

REVISIONS	DATE
△	
△	
△	
△	

ISSUE		DATE
1	1ST SUBMITTAL	9.19.2025
2	2ND SUBMITTAL	10.22.2025
3	3RD SUBMITTAL	12.03.2025
4	4TH SUBMITTAL	2.03.2026
5		

REGISTERED LANDSCAPE ARCHITECT
KEVIN C. LEAMY
No. 4965
12/31/26
Renewal Date
2.01.2026
Date
STATE OF CALIFORNIA

DRAWN : AM
CHECKED : KCL
SCALE: : 1"=20'-0"

SHEET TITLE:

LANDSCAPE LAYOUT PLAN

SHEET
LL-1.0
26 OF 40 SHEETS

FUHRMAN LEAMY LAND GROUP RESERVES ITS COMMON LAW COPYRIGHT AND OTHER PROPERTY RIGHTS IN THESE PLANS. THESE PLANS AND DRAWING ARE NOT TO BE REPRODUCED, CHANGED OR COPIED IN ANY FORM OR MANNER WHATSOEVER WITHOUT FIRST OBTAINING THE EXPRESS WRITTEN PERMISSION OF FUHRMAN LEAMY LAND GROUP NOR ARE THEY TO BE ASSIGNED TO ANY THIRD PARTY WITHOUT FIRST OBTAINING WRITTEN PERMISSION AND CONSENT.

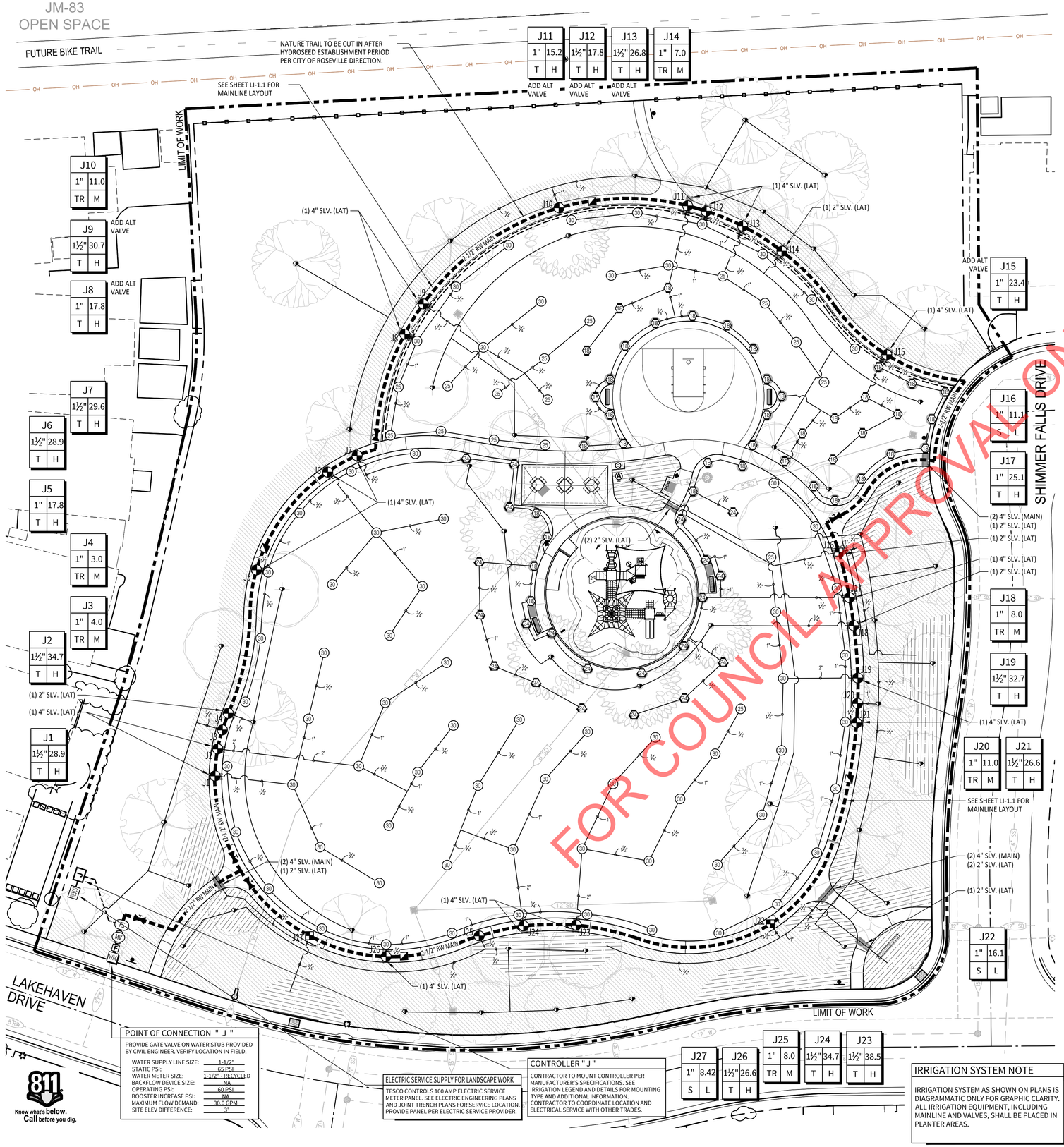

J1	1½"	28.9	T H
J2	1½"	34.7	T H
J3	1"	4.0	TR M
J4	1"	3.0	TR M
J5	1"	17.8	T H
J6	1½"	28.9	T H
J7	1½"	29.6	T H
J8	1"	17.8	T H
J9	1½"	30.7	T H
J10	1"	11.0	TR M
J11	1"	15.2	T H
J12	1½"	17.8	T H
J13	1½"	26.8	T H
J14	1"	7.0	TR M
J15	1"	23.4	T H
J16	1"	11.1	S L
J17	1"	25.1	T H
J18	1"	8.0	TR M
J19	1½"	32.7	T H
J20	1"	11.0	TR M
J21	1½"	26.6	T H
J22	1"	16.1	S L
J23	1½"	38.5	T H
J24	1½"	34.7	T H
J25	1"	8.0	TR M
J26	1½"	26.6	T H
J27	1"	8.42	S L

POINT OF CONNECTION " J "
PROVIDE GATE VALVE ON WATER STUB PROVIDED BY CIVIL ENGINEER. VERIFY LOCATION IN FIELD.

WATER SUPPLY LINE SIZE:	1-1/2"
STATIC PSI:	65 PSI
WATER METER SIZE:	1-1/2" - RECYCLED
BACKFLOW DEVICE SIZE:	NA
OPERATING PSI:	60 PSI
BOOSTER INCREASE PSI:	NA
MAXIMUM FLOW DEMAND:	30.0 GPM
SITE ELEV DIFFERENCE:	3'

ELECTRIC SERVICE SUPPLY FOR LANDSCAPE WORK
TESCO CONTROLS 100 AMP ELECTRIC SERVICE METER PANEL. SEE ELECTRIC ENGINEERING PLANS AND JOINT TRENCH PLANS FOR SERVICE LOCATION. PROVIDE PANEL PER ELECTRIC SERVICE PROVIDER.

CONTROLLER " J "
CONTRACTOR TO MOUNT CONTROLLER PER MANUFACTURER'S SPECIFICATIONS. SEE IRRIGATION LEGEND AND DETAILS FOR MOUNTING TYPE AND ADDITIONAL INFORMATION. CONTRACTOR TO COORDINATE LOCATION AND ELECTRICAL SERVICE WITH OTHER TRADES.

Know what's below. Call before you dig.

IRRIGATION LIST & LEGEND

SYMBOL	MANUFACTURER/MODEL/DESCRIPTION	PSI
1402	RAIN BIRD: RWS-B-C-P DEEP ROOT WATERING SYSTEM WITH CHECK VALVE AND PURPLE GRATE. RAINBIRD BUBBLER OPTION 1402 (0.50 GPM). CONTRACTOR TO PLACE (2) BUBBLERS PER TREE AS SHOWN ON PLANS.	30
18 ADJ 18 T	RAIN BIRD: R-VAN18 RD-06-S-P45-NP TURF ROTARY, (13 FT. - 18 FT. ADJUSTABLE), W/1800 TURF BODY ON 6" POP-UP, WITH CHECK VALVE AND 45 PSI PRESSURE REGULATOR AND PURPLE CAP.	45
24 ADJ 24 T	RAIN BIRD: R-VAN24 RD-06-S-P45-NP TURF ROTARY, (17 FT. - 24 FT. ADJUSTABLE), W/1800 TURF BODY ON 6" POP-UP, WITH CHECK VALVE AND 45 PSI PRESSURE REGULATOR AND PURPLE CAP.	45
25 30 35	RAIN BIRD: 5006-PC-FC-NP-SS-MPR TURF ROTOR, 6" POP-UP, STAINLESS STEEL RISER, MATCHED PRECIPITATION ROTOR (MPR NOZZLE). ARC AND RADIUS AS PER SYMBOL (25 FT = RED, 30 FT = GREEN, 35 FT = BEIGE). WITH NON-POTABLE PURPLE CAP.	45
SYMBOL	MANUFACTURER/MODEL/DESCRIPTION	PSI
	RAIN BIRD: XCZ-PRB-COM SERIES REMOTE CONTROL DRIP ZONE ASSEMBLY WITH PEB VALVE, PRESSURE REGULATING QUICK CHECK BASKET FILTER, AND PURPLE HANDLE. SEE PLAN FOR SIZE. PROVIDE IN PURPLE VALVE BOX PER DETAIL.	--
A	RAIN BIRD: ARV050 AIR RELIEF VALVE. PLACE AT HIGHEST POINT ON EACH EXHAUST HEADER. SEE PLAN FOR APPROXIMATE LOCATIONS.	--
LF	LINE FLUSH VALVE: PER CITY SPECIFICATION PROVIDE AT THE LOWEST POINT ON EACH EXHAUST HEADER. SEE PLAN FOR APPROXIMATE LOCATIONS. PROVIDE OPERATION INDICATORS (OPERIND) AT ALL FLUSH VALVE LOCATIONS. INSTALL PER MANUFACTURER SPECIFICATIONS AND PK-IR-15.	--
	AREA TO RECEIVE DRIPLINE - RAIN BIRD: XFS-CV-06-18 SUB-SURFACE DRIPPER LINE WITH 0.6 GPH FLOW RATE AND 18" DRIPPER SPACING, PLACED AT 18" O.C. PROVIDE 6" BELOW GRADE OF TOP DRESSING (4" BELOW FINISHED SOIL GRADE). SPECIFY XF INSERT FITTINGS. INSTALL PER MANUFACTURER SPECIFICATIONS.	30
SYMBOL	MANUFACTURER/MODEL/DESCRIPTION	
	RAIN BIRD: PEBR REMOTE CONTROL VALVE WITH PURPLE FLOW CONTROL HANDLE FOR RECLAIMED WATER. SEE PLAN FOR SIZE. PROVIDE IN VALVE BOX PER DETAIL.	
	RAIN BIRD: 44-NP 1" BRASS QUICK COUPLING VALVE WITH STAINLESS STEEL SPRING AND PURPLE LOCKING RUBBER COVER FOR RECLAIMED WATER. PROVIDE IN VALVE BOX PER DETAIL.	
	NIBCO: T-113 CLASS 125 BRONZE, THREADED GATE VALVE WITH WHEEL HANDLE (LINE SIZE 2-1/2" AND SMALLER). PROVIDE IN PURPLE VALVE BOX PER DETAIL.	
MV	BUCKNER-SUPERIOR: 3300-150-RW 1-1/2" NORMALLY OPEN BRASS MASTER VALVE THAT PROVIDES DIRTY WATER PROTECTION AND NO MINIMUM FLOW FEATURE WITH PURPLE CROSS HANDLE FOR RECLAIMED WATER USE.	
J	CALSENSE: CS3-32-S1/CS3-EN/GR-STUBBY/FM-U 32-STATION AUTOMATIC CONTROLLER PER CITY STANDARD. PROVIDE IN STAINLESS STEEL PEDESTAL MOUNT ENCLOSURE WITH AUTOMATIC RAIN SHUT OFF DEVICE. INSTALL PER MANUFACTURER SPECIFICATIONS. NOTE: CONTRACTOR TO PROVIDE THIRD-PARTY COMMUNICATION HARDWARE PER CITY OF ROSEVILLE STANDARDS.	
FS	CALSENSE: FM-U 1-1/2" ULTRASONIC FLOW METER PER CITY OF ROSEVILLE CONSTRUCTION STANDARDS. INSTALL PER MANUFACTURER SPECIFICATIONS.	
F	AMIAD: 2" PLASTIC SUPER-T, SEMI-AUTOMATIC WATER FILTER WITH SCANAWAY 130 MICRON FILTER ELEMENT PER CITY OF ROSEVILLE CONSTRUCTION STANDARDS. INSTALL PER MANUFACTURER SPECIFICATIONS.	
TESCO	TESCO PEDESTAL: ELECTRICAL PEDESTAL. SEE ELECTRICAL PLANS.	
WM	WATER METER: 1-1/2" RECYCLED PER CIVIL PLANS.	
	IRRIGATION LATERAL LINE: PVC SCHEDULE 40	
	IRRIGATION MAINLINE: PVC SCHEDULE 40	
	PIPE SLEEVE: PVC SCHEDULE 40. INSTALL SLEEVES TWICE THE DIAMETER OF THE PIPE. EXTEND 12" MINIMUM PAST HARDSCAPE EDGES. SEE PLANS.	
	CONDUIT: PVC SCHEDULE 40. 2" MIN. DIAMETER FOR LOW VOLTAGE WIRING	

Valve Callout	Plant Type
# Valve Number	S - Shrub TR - Tree TU - Turf HYD - Hydroseed Area BIO - Bioremediation Sod
#" Valve Flow	
# Valve Size	
X Hydrozone Area	
X Plant Type	

WATER AUDIT NOTE:
CONTRACTOR IS REQUIRED TO PROVIDE THE CITY OF ROSEVILLE A LANDSCAPE IRRIGATION AUDIT PERFORMED BY A 3RD PARTY CERTIFIED LANDSCAPE IRRIGATION AUDITOR. THE AUDIT MUST MEET CURRENT MWELO MANDATES. SEE PARKS CONSTRUCTION STANDARDS FOR ADDITIONAL INFORMATION.

IRRIGATION SYSTEM NOTE
IRRIGATION SYSTEM AS SHOWN ON PLANS IS DIAGRAMMATIC ONLY FOR GRAPHIC CLARITY. ALL IRRIGATION EQUIPMENT, INCLUDING MAINLINE AND VALVES, SHALL BE PLACED IN PLANTER AREAS.

WATER EFFICIENT LANDSCAPE ORDINANCE:
"I have complied with the criteria of the Water Efficient Landscape Ordinance and applied such criteria for the efficient use of water in the irrigation design plan."

Applicant Signature	License #	Date
	4965	9.2.2025

SCALE: 1" = 20'–0"
0' 20' 80'
10' 40'

FUHRMAN LEAMY LAND GROUP
DESIGN • SERVICE • SOLUTIONS
3400 DOUGLAS BLVD., SUITE 275
ROSEVILLE, CALIFORNIA 95661
916.783.5263 • FLLANDGROUP.COM

JOB NO. : CRV: 25026

CITY OF ROSEVILLE APPROVAL

PROJECT:
JM-51PARK
7060 LAKEHAVEN DRIVE
ROSEVILLE, CA

CLIENT:
CITY OF ROSEVILLE

REVISIONS		DATE
△		
△		
△		
△		

ISSUE		DATE
1	1ST SUBMITTAL	9.19.2025
2	2ND SUBMITTAL	10.22.2025
3	3RD SUBMITTAL	12.03.2025
4	4TH SUBMITTAL	2.03.2026
5		

REGISTERED LANDSCAPE ARCHITECT
KEVIN C. LEAMY
No. 4965
Signature
12/31/26
Renewal Date
2.01.2026
Date
STATE OF CALIFORNIA

DRAWN : AM
CHECKED : KCL
SCALE: : 1"=20'-0"

SHEET TITLE:
LANDSCAPE IRRIGATION PLAN & LEGEND

SHEET
LI-1.0
27 OF 40 SHEETS

FUHRMAN LEAMY LAND GROUP HEREBY EXPRESSLY RESERVES ITS COMMON LAW COPYRIGHT AND OTHER PROPERTY RIGHTS IN THESE PLANS. THESE PLANS AND DRAWINGS ARE NOT TO BE REPRODUCED, CHANGED OR COPIED IN ANY FORM OR MANNER WHATSOEVER WITHOUT FIRST OBTAINING THE EXPRESS WRITTEN PERMISSION OF FUHRMAN LEAMY LAND GROUP NOR ARE THEY TO BE ASSIGNED TO ANY THIRD PARTY WITHOUT FIRST OBTAINING WRITTEN PERMISSION AND CONSENT.

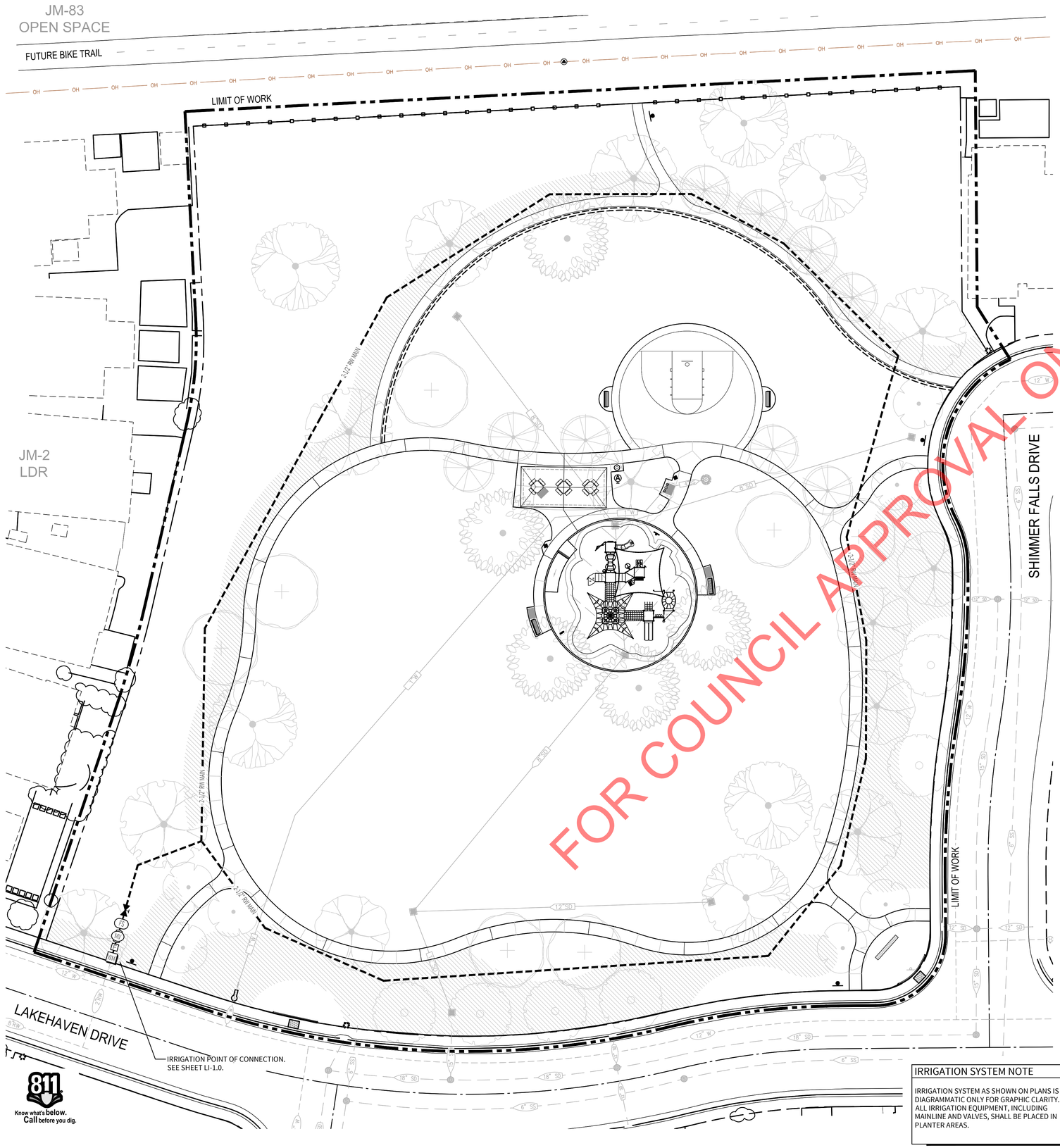

811 Know what's below. Call before you dig.

IRRIGATION SYSTEM NOTE

IRRIGATION SYSTEM AS SHOWN ON PLANS IS DIAGRAMMATIC ONLY FOR GRAPHIC CLARITY. ALL IRRIGATION EQUIPMENT, INCLUDING MAINLINE AND VALVES, SHALL BE PLACED IN PLANTER AREAS.

WATER EFFICIENT LANDSCAPE ORDINANCE:

"I have complied with the criteria of the Water Efficient Landscape Ordinance and applied such criteria for the efficient use of water in the irrigation design plan."

Applicant Signature	License #	Date
	4965	9.2.2025

SCALE: 1" = 20'–0"

0' 20' 80'

10' 40'

FUHRMAN LEAMY
LAND GROUP
DESIGN • SERVICE • SOLUTIONS

3400 DOUGLAS BLVD., SUITE 275
ROSEVILLE, CALIFORNIA 95661
916.783.5263 • FLLANDGROUP.COM

JOB NO. : CRV- 25026

CITY OF ROSEVILLE APPROVAL

PROJECT:

JM-51PARK

7060 LAKEHAVEN DRIVE
ROSEVILLE, CA

CLIENT:
CITY OF ROSEVILLE

REVISIONS	DATE
1	
2	
3	
4	

ISSUE		DATE
1	1ST SUBMITTAL	9.19.2025
2	2ND SUBMITTAL	10.22.2025
3	3RD SUBMITTAL	12.03.2025
4	4TH SUBMITTAL	2.03.2026
5		

REGISTERED LANDSCAPE ARCHITECT
KEVIN C. LEAMY
No. 4965
Signature
12/31/26
Renewal Date
2.01.2026
Date
STATE OF CALIFORNIA

DRAWN : AM
CHECKED : KCL
SCALE: : 1"=20'-0"

SHEET TITLE:

LANDSCAPE IRRIGATION PLAN - MAINLINE LAYOUT

SHEET

LI-1.1

28 OF 40 SHEETS

FUHRMAN LEAMY LAND GROUP HEREBY EXPRESSLY RESERVES ITS COMMON LAW COPYRIGHT AND OTHER PROPERTY RIGHTS IN THESE PLANS. THESE PLANS AND DRAWINGS ARE NOT TO BE REPRODUCED, CHANGED OR COPIED IN ANY FORM OR MANNER WHATSOEVER WITHOUT FIRST OBTAINING THE EXPRESS WRITTEN PERMISSION OF FUHRMAN LEAMY LAND GROUP NOR ARE THEY TO BE ASSIGNED TO ANY THIRD PARTY WITHOUT FIRST OBTAINING WRITTEN PERMISSION AND CONSENT.

FUHRMAN LEAMY LAND GROUP HEREBY EXPRESSLY RESERVES ITS COMMON LAW COPYRIGHT AND OTHER PROPERTY RIGHTS IN THESE PLANS. THESE PLANS AND DRAWINGS ARE NOT TO BE REPRODUCED, CHANGED OR COPIED IN ANY FORM OR MANNER WHATSOEVER WITHOUT FIRST OBTAINING THE EXPRESS WRITTEN PERMISSION OF FUHRMAN LEAMY LAND GROUP NOR ARE THEY TO BE ASSIGNED TO ANY THIRD PARTY WITHOUT FIRST OBTAINING WRITTEN PERMISSION AND CONSENT.

CITY OF ROSEVILLE RECYCLED WATER NOTES

1. THE INSTALLATION OF THE RECYCLED WATER SYSTEM SHALL CONFORM TO THE REGULATIONS FOR THE CONSTRUCTION OF RECYCLED WATER SYSTEMS WITHIN THE CITY OF ROSEVILLE AND THE ACCOMPANYING PLANS AND SPECIFICATIONS.

2. ALL ON-SITE RECYCLED AND POTABLE WATER PIPING INSTALLED ON THIS PROJECT SHALL BE IDENTIFIED IN ACCORDANCE WITH THE CITY OF ROSEVILLE CONSTRUCTION STANDARDS FOR RECYCLED WATER INFRASTRUCTURE AND THE IRRIGATION SPECIFICATIONS.

3. CITY OF ROSEVILLE ENVIRONMENTAL UTILITIES DEPARTMENT SHALL BE NOTIFIED TWO DAYS PRIOR TO THE START OF CONSTRUCTION AT (916) 774-5750 AND EACH WORKDAY THEREAFTER UNTIL COMPLETION OF THE PROJECT FOR COMMERCIAL IRRIGATION SYSTEMS. CITY OF ROSEVILLE PARKS DEPARTMENT SHALL BE NOTIFIED TWO DAYS PRIOR TO THE START OF CONSTRUCTION AT (916) 746-1758 FOR LANDSCAPE CORRIDORS AND PARKS. A PRE-CONSTRUCTION MATERIALS INSPECTION MUST BE ARRANGED PRIOR TO THE START OF CONSTRUCTION.

4. NO FACILITY IS TO BE BACKFILLED UNTIL INSPECTED BY THE CITY OF ROSEVILLE ENVIRONMENTAL UTILITIES DEPARTMENT AND/OR PARKS DEPARTMENT INSPECTOR.

5. ALL RECYCLED WATER INFRASTRUCTURE, BOTH ON-SITE AND OFF-SITE SHALL BE INSPECTED BY CITY OF ROSEVILLE ENVIRONMENTAL UTILITIES AND/OR PARKS DEPARTMENT. FOR INSPECTION OF RECYCLED WATER SYSTEM CONTACT ENVIRONMENTAL UTILITIES AT 774-5750 FORTY-EIGHT (48) HOURS IN ADVANCE. POINTS OF INSPECTION ARE:

   a. PRE-CONSTRUCTION MATERIALS INSPECTION.
   b. IRRIGATION SYSTEM INSTALLATION BEFORE LINES ARE COVERED.
   c. PRESSURE TESTING.
   d. SYSTEM CROSS CONNECTION CONTROL TEST.
   e. SYSTEM COVERAGE TEST.

6. ALL RECYCLED WATER PIPING SHALL BE PURPLE COLORED PVC UNLESS OTHERWISE SPECIFIED. WHERE PURPLE PVC IS NOT USED, PIPE SHALL BE IDENTIFIED (MARKED) IN ACCORDANCE WITH THE CITY OF ROSEVILLE CONSTRUCTION STANDARDS.

7. MARKING ON THE PURPLE COLORED PVC PIPE SHALL INLCUDE THE FOLLOWING:
   "CAUTION: RECYCLED WATER - DO NOT DRINK". NOMINAL PIPE SIZE. PVC - 1120. PRESSURE RATING IN POUNDS PER SQUARE INCH AT 73 DEGREES. ASTM DESIGNATIONS SUCH AS 1785, 2241, 1672, 3139. PRINTING SHALL BE PLACED CONTINUOUSLY ON TWO SIDES OF THE PIPE.

8. ALL RECYCLED WATER SPRINKLER CONTROL VALVES, VALVE RISERS AND SWING JOINTS SHALL BE TAGGED WITH IDENTIFICATION TAGS OR ADHESIVE LABELS.

   a. TAGS SHALL BE WEATHERPROOF PLASTIC, 3"x4", PURPLE COLOR WITH THE WORDS "WARNING: RECYCLED WATER - DO NOT DRINK" IMPRINTED ON ONE SIDE AND "AVISA: AGUA IMPURA - NO TOMAR" ON THE OTHER SIDE. IMPRINTING SHALL BE PERMANENT AND BLACK IN COLOR. USE TAGS AS MANUFACTURED BY T. CHRISTY ENTERPRISES OR APPROVED EQUAL.

   b. ONE TAG SHALL BE ATTACHED TO EACH VALVE AS FOLLOWS:
      1. ATTACH TO VALVE STEM DIRECTLY OR WITH PLASTIC TIE-WRAP, OR
      2. ATTACH TO SOLENOID WIRE DIRECTLY OR WITH PLASTIC TIE-WRAP.

   c. RECYCLED WATER WARNING LABELS OR STICKERS THAT ARE CONSISTENT WITH CITY OR ROSEVILLE CONSTRUCTION STANDARDS FOR RECYCLED WATER INFRASTRUCTURE AND THE IRRIGATION SPECIFICATIONS MUST BE ATTACHED TO ALL PIPING NOT IN COMPLIANCE.

   d. ALL SPRINKLER HEADS MUST BE DESIGNED FOR RECYCLED WATER USAGE, WITH PURPLE RECYCLED WATER WARNING CAPS.

   e. SPRINKLER RISERS AND SWING JOINTS SHALL BE IDENTIFIED WITH PURPLE ADHESIVE 3"x3" LABELS. EACH LABEL SHALL STATE "RECYCLED WATER - DO NOT DRINK" IN ENGLISH AND SPANISH.

9. ALL RECYCLED WATER CONTROL VALVE BOXES SHALL BE PURPLE AND HAVE A WARNING LABEL PERMANENTLY MOLDED INTO OR AFFIXED ONTO THE LID WITH RIVETS, BOLTS, ETC. WARNING LABELS SHALL BE CONSTRUCTED OF A PURPLE WEATHERPROOF MATERIAL WITH THE WARNING PERMANENTLY STAMPED OR MOLDED INTO THE LABEL. THE WARNING SHALL CONTAIN THE FOLLOWING INFORMATION:

   a. "NON-POTABLE" OR "RECYCLED WATER"
   b. "DO NOT DRINK" IN ENGLISH AND SPANISH.

10. RECYCLED WATER QUICK COUPLING VALVES SHALL HAVE A PURPLE RUBBER OR VINYL COVER. THE COVER SHALL BE OF A LOCKING TYPE AND HAVE A WARNING PERMANENTLY STAMPED OR MOLDED AS FOLLOWS: "RECYCLED WATER - DO NOT DRINK" IN ENGLISH AND SPANISH.

11. PLASTIC WARNING TAPE SHALL BE USED ON ALL POTABLE WATER PIPING, POTABLE WATER WARNING TAPE SHALL BE A MINIMUM OF 3" WIDE AND SHALL RUN CONTINUOUSLY FOR THE ENTIRE LENGTH OF EACH LINE. THE TAPE SHALL BE ATTACHED TO THE TOP OF THE PIPE WITH NYLON TIE-WRAP, BANDED AROUND THE WARNING TAPE AND THE PIPE EVERY FIVE FEET ON CENTER. WARNING TAPE FOR THE POTABLE WATER PIPING SHALL BE BLUE IN COLOR WITH WORDS "CAUTION: POTABLE WATER LINE BURIED BELOW" IMPRINTED IN MINIMUM 1" HIGH LETTERS, BLACK IN COLOR. IMPRINTING SHALL BE CONTINUOUS AND PERMANENT.

12. ALL PRESSURE MAIN LINE PIPING FROM THE RECYCLED WATER SYSTEM SHALL BE INSTALLED TO MAINTAIN 10 FEET MINIMUM HORIZONTAL SEPARATION FROM ALL POTABLE WATER PIPING. WHERE RECYCLED AND POTABLE WATER PRESSURE MAIN LINE PIPING CROSS, THE RECYCLED WATER PIPING SHALL BE INSTALLED 12" BELOW THE POTABLE WATER PIPING OD TO OD. WHERE THE RECYCLED WATER PRESSURE MAIN LINE MUST PASS ABOVE POTABLE WATER PIPING, THE RECYCLED WATER PIPING SHALL BE INSTALLED IN A CLASS 200 PURPLE COLORED PVC SLEEVE WHICH EXTENDS A MINIMUM OF FIVE FEET ON EITHER SIDE OF THE POTABLE WATER PIPING. A 12" VERTICAL SEPARATION OD TO OD MUST BE MAINTAINED. CONVENTIONAL (WHITE) PVC PIPE MAY BE USED FOR SLEEVING MATERIAL IF IT IS TAPED WITH 3" WIDE PURPLE WARNING TAPE WHICH READS "RECYCLED WATER - DO NOT DRINK".

13. ALL PRESSURE MAIN LINE PIPING FROM THE RECYCLED WATER SYSTEM SHALL BE INSTALLED TO MAINTAIN A 10' MINIMUM HORIZONTAL SEPARATION FROM ALL SANITARY SEWER LINES. WHERE RECYCLED WATER AND SEWER CROSS, THE RECYCLED WATER PIPING SHALL BE INSTALLED A MINIMUM OF ONE FOOT ABOVE THE SEWER LINE.

14. FOR ON-SITE RECLAIMED WATER PIPING, THE MINIMUM DEPTH FROM FINISH GRADE TO TOP OF PIPE SHALL BE AS FOLLOWS:

   a. INTERMITTENT PRESSURE LINES (ALL SIZES).....12"
   b. CONSTANT PRESSURE LINES 2.5" AND SMALLER.....18"
   c. CONSTANT PRESSURE LINES 3" AND LARGER.....24"

15. PRESSURE AND CROSS CONNECTION TESTING FOR ON-SITE RECYCLED WATER SYSTEMS

   a. ALL TESTING OF RECYCLED WATER SYSTEMS MUST BE PERFORMED UTILIZING A POTABLE WATER SOURCE VIA A CONSTRUCTION WATER CONNECTION PER CITY OF ROSEVILLE CONSTRUCTION STANDARDS. NO RECYCLED WATER MAY ENTER A RECYCLED WATER SYSTEM UNTIL ALL TESTING IS SUCCESSFULLY COMPLETED.

   b. THE SOURCE OF POTABLE WATER USED FOR TESTING MUST HAVE A METER AND AN APPROVED BACKFLOW PREVENTION DEVICE. THESE CAN BE OBTAINED THROUGH THE CITY OF ROSEVILLE.

   c. THE CONTRACTOR SHALL PROVIDE A MEANS TO PLUMB IN PRESSURE AND CROSS TESTING APPARATUS AT THE POINT OF HIGHEST ELEVATION FOR BOTH POTABLE AND CONSTANT PRESSURE RECYCLED WATER SYSTEMS.

   d. THE CONSTANT PRESSURE RECYCLED WATER SYSTEM INCLUDING ALL APPURTENANCES SHALL BE TESTED AT 125 PSI AT HIGHEST POINT OF ELEVATION FOR 1 HOUR WITH NO DETECTABLE LEAKAGE.

   e. PRESSURE TESTING MUST BE SUCCESSFULLY COMPLETED PRIOR TO CROSS CONNECTION TESTING.

   f. THE RECYCLED WATER SYSTEM SHALL BE TESTED FOR CROSS CONNECTION IN ACCORDANCE WITH UNIFORM PLUMBING CODE APPENDIX J PRIOR TO USE.

   g. FOR PROJECTS BEING PERFORMED IN PHASES, A CROSS CONNECTION TEST SHALL BE PERFORMED ON EACH PHASE INDEPENDENTLY BEFORE IT IS PUT INTO SERVICE. THE POTABLE WATER SOURCE USED FOR TESTING EACH PHASE MUST BE INDEPENDENT OF OTHER PREVIOUSLY COMPLETED PHASES.

   h. AT THE TIME A CROSS CONNECTION TEST IS TO BE PERFORMED, CONSTRUCTION ON BOTH THE POTABLE AND THE RECYCLED WATER SYSTEMS BEING TESTED MUST BE COMPLETE AND BOTH SYSTEMS FULLY OPERATIONAL AND FUNCTIONING AS DESIGNED.

   i. CROSS CONNECTION TESTING SHALL BE PERFORMED ON THE SYSTEM BY CITY FORCES WITH THE ASSISTANCE OF THE CONTRACTOR. THE TEST WILL BE COORDINATED THROUGH THE ENVIRONMENTAL UTILITIES OR PARKS DEPARTMENT INSPECTOR. FORTY-EIGHT (48) HOURS NOTICE IS REQUIRED BEFORE THE TEST. DEPENDING ON THE COMPLEXITY OF THE SITE, A PRELIMINARY FIELD MEET MAY ALSO BE REQUIRED.

16. COVERAGE TEST:
    ADJUST SPRAY HEADS TO ELIMINATE OVERSPRAY ONTO NATIVE OAK AREAS AND INTO AREAS NOT UNDER THE CONTROL OF THE CUSTOMER. FOR EXAMPLE: POOL DECKS, PRIVATE PATIOS, STREETS AND SIDEWALKS.

17. METER INSTALLATION:
    ONCE THE ON-SITE RECYCLED WATER SYSTEM HAS BEEN PROPERLY INSPECTED AND PASSED PRESSURE AND CROSS CONNECTION TESTING, A METER MAY BE INSTALLED. THE METER MUST BE PURCHASED FROM THE CITY OF ROSEVILLE AND INSTALLED BY CITY FORCES. COORDINATE METER PURCHASE AND INSTALLATION WITH THE ENVIRONMENTAL UTILITIES OR PARKS DEPARTMENT INSPECTOR.

18. NO CONNECTION SHALL BE MADE TO THE CITY'S EXISTING RECYCLED WATER SYSTEM UNTIL THE NEW FACILITIES HAVE BEEN SUCCESSFULLY PRESSURE AND CROSS CONNECTION TESTED. TAPS TO THE EXISTING RECYCLED SYSTEM WILL BE MADE BY CITY FORCES ONLY.

19. FAILURE TO COMPLY WITH ANY OR ALL OF THE ABOVE GUIDELINES VIOLATES THE CITY OF ROSEVILLE DESIGN AND CONSTRUCTION STANDARDS FOR RECYCLED WATER INFRASTRUCTURE AND WILL RESULT IN TERMINATION OF SERVICE UNTIL THE APPROPRIATE CORRECTIVE STEPS HAVE BEEN TAKEN.

20. RECYCLE WATER WARNING/INFORMATION SIGN SHALL BE LOCATED AT ALL ACCESS POINTS TO THE AREA OF RECYCLED WATER USE. SIGNS SHALL ALSO BE PLACED ALONG FRONTAGE ROADS AT INTERVALS OF EVERY 500 FEET OR LESS. THE SIGNS SHALL BE INSTALLED IN ACCORDANCE WITH THE CONSTRUCTION STANDARDS HEREIN AND AS REQUIRED BY THE ENVIRONMENTAL UTILITIES DIRECTOR.

GENERAL IRRIGATION NOTES

1. ALL POP-UP TYPE SPRINKLER HEADS INSTALLED IN SHRUB OR GROUNDCOVER AREAS SHALL BE INSTALLED SO THAT THE TOP OF THE SPRINKLER HEAD IS 1" ABOVE FINISH GRADE.

2. ALL POP-UP TYPE SPRINKLER HEADS INSTALLED IN TURF AREAS SHALL BE INSTALLED SO THAT THE TOP OF THE SPRINKLER HEAD IS FLUSH WITH ADJACENT SIDEWALK OR CURB.

3. ALL SPRINKLER HEADS SHALL BE SET PERPENDICULAR TO FINISH GRADE OF THE AREA TO BE IRRIGATED UNLESS OTHERWISE DESIGNATED ON THE PLANS.

4. ALL SPRINKLERS SHALL BE INSTALLED WITH A 'CHECK VALVE' TO PREVENT DRAINAGE FROM SPRINKLER HEAD WHEN THE SPRINKLER IS OFF. DRAINAGE OF IRRIGATION WATER THROUGH SPRINKLER HEADS WILL NOT BE ALLOWED.

5. THE SPRINKLER SYSTEM DESIGN IS BASED ON THE MINIMUM OPERATING PRESSURE OF 65 PSI AND THE MAXIMUM FLOW OF 30.0 GPM AS SHOWN ON THE IRRIGATION DRAWINGS AT THE METER OR POINT OF CONNECTION. THE IRRIGATION CONTRACTOR SHALL VERIFY WATER PRESSURE PRIOR TO CONSTRUCTION. REPORT ANY DIFFERENCE BETWEEN THE WATER PRESSURE IRRIGATION POINT OF CONNECTION TO THE OWNER'S AUTHORIZED REPRESENTATIVE. IN THE EVENT THAT PRESSURE DIFFERENCES ARE NOT REPORTED PRIOR TO THE START OF CONSTRUCTION, THE IRRIGATION CONTRACTOR SHALL ASSUME FULL RESPONSIBILITY FOR ANY REVISIONS NECESSARY.

6. 120 VOLT ELECTRICAL POWER OUTLET AT THE AUTOMATIC CONTROLLER LOCATION SHALL BE PROVIDED BY OTHERS. IT SHALL BE THE RESPONSIBILITY OF THE IRRIGATION CONTRACTOR TO MAKE THE FINAL HOOK-UP FROM THE ELECTRICAL OUTLET TO THE AUTOMATIC CONTROLLER.

7. THIS DESIGN IS DIAGRAMMATIC. ALL PIPING, VALVES, ETC. SHOWN WITHIN PAVED AREAS IS FOR DESIGN CLARIFICATION ONLY AND SHALL BE INSTALLED IN PLANTING AREAS. AVOID ANY CONFLICTS BETWEEN THE SPRINKLER SYSTEM, PLANTING AND ARCHITECTURAL FEATURES.

8. THE IRRIGATION CONTRACTOR SHALL FLUSH AND ADJUST ALL SPRINKLER HEADS FOR OPTIMUM PERFORMANCE AND TO PREVENT OVER-SPRAY ONTO WALKS, ROADWAYS AND/OR BUILDINGS AS MUCH AS POSSIBLE. THIS SHALL INCLUDE SELECTING THE BEST DEGREE OF ARC TO FIT THE EXISTING SITE CONDITIONS AND TO THROTTLE THE FLOW CONTROL AT EACH VALVE TO OBTAIN THE OPTIMUM OPERATING PRESSURE FOR EACH SYSTEM.

9. DO NOT WILLFULLY INSTALL THE SPRINKLER SYSTEM AS SHOWN ON THE DRAWINGS WHEN IT IS OBVIOUS IN THE FIELD THAT OBSTRUCTIONS, GRADE DIFFERENCES OR DIFFERENCES IN THE AREA DIMENSIONS EXIST THAT MIGHT NOT HAVE BEEN CONSIDERED IN THE ENGINEERING. SUCH OBSTRUCTIONS OR DIFFERENCES SHOULD BE BROUGHT TO THE ATTENTION OF THE OWNER'S AUTHORIZED REPRESENTATIVE. IN THE EVENT THAT THIS NOTIFICATION IS NOT PERFORMED, THE IRRIGATION CONTRACTOR SHALL ASSUME FULL RESPONSIBILITY FOR ANY REVISIONS NECESSARY.

10. INSTALL ALL PIPE MATERIALS AND EQUIPMENT AS SHOWN IN THE DETAILS. USE TEFLON TAPE OR TEFLON PIPE DOPE ON ALL PVC MALE PIPE THREADS ON ALL SPRINKLER SWING JOINT AND VALVE ASSEMBLIES.

11. IT IS THE RESPONSIBILITY OF THE IRRIGATION CONTRACTOR TO FAMILIARIZE HIMSELF WITH ALL GRADE DIFFERENCES, LOCATION OF WALLS, RETAINING WALLS, ETC. HE SHALL COORDINATE HIS WORK WITH THE GENERAL CONTRACTOR AND OTHER SUB- CONTRACTORS FOR THE LOCATION AND THE INSTALLATION OF PIPE SLEEVES THROUGH WALLS, UNDER ROADWAYS, PAVING, STRUCTURES, ETC.

12. IN ADDITION TO THE CONTROL WIRE SLEEVES SHOWN ON THE DRAWINGS, THE IRRIGATION CONTRACTOR SHALL BE RESPONSIBLE FOR THE INSTALLATION OF CONTROL WIRE SLEEVES OF SUFFICIENT SIZE UNDER ALL OTHER PAVED AREAS.

13. IN ADDITION TO THE CONTROL WIRE NECESSARY FOR THE REMOTE CONTROL VALVES SHOWN ON THE DRAWING, THE CONTRACTOR SHALL PROVIDE A MINIMUM OF EIGHTEEN (18) INCHES OF A COMPLETE SET OF SPARE CONTROL WIRES, LOOPED, WITHIN EACH VALVE BOX.

14. CONTRACTOR SHALL PROGRAM IRRIGATION CONTROLLER TO OPERATE AS FOLLOWS POST-CONSTRUCTION: SPRAY VALVES SHALL ONLY BE TURNED ON BETWEEN THE HOURS OF 10:00 P.M. AND 6:00 A.M. BUBBLER AND DRIP VALVES CAN OPERATE AT ANY TIME.

15. PER MWELO, IRRIGATION HEADS MUST BE PLACED SO THAT HARDSCAPED AREAS DRAIN TOWARD LANDSCAPED AREAS, AND WITH NO OVERSPRAY. OTHERWISE A SETBACK FROM HARDSCAPE OF 24" MINIMUM IS REQUIRED.

16. ALL LANDSCAPE AUDITS SHALL BE CONDUCTED BY A THIRD PARTY CERTIFIED LANDSCAPE IRRIGATION AUDITOR.

17. THE PROJECT APPLICANT SHALL SUBMIT AN IRRIGATION AUDIT REPORT WITH THE CERTIFICATE OF COMPLETION TO THE RESPONSIBLE LOCAL AGENCY PER WELO REQUIREMENTS.

FOR COUNCIL APPROVAL ONLY

FUHRMAN LEAMY
LAND GROUP
DESIGN • SERVICE • SOLUTIONS

3400 DOUGLAS BLVD., SUITE 275
ROSEVILLE, CALIFORNIA 95661
916.783.5263 • FLLANDGROUP.COM

JOB NO. : CRV- 25026

CITY OF ROSEVILLE APPROVAL

PROJECT:

JM-51PARK

7060 LAKEHAVEN DRIVE
ROSEVILLE, CA

CLIENT:
CITY OF ROSEVILLE

REVISIONS	DATE
△	
△	
△	
△	

ISSUE		DATE
1	1ST SUBMITTAL	9.19.2025
2	2ND SUBMITTAL	10.22.2025
3	3RD SUBMITTAL	12.03.2025
4	4TH SUBMITTAL	2.03.2026
5		

REGISTERED LANDSCAPE ARCHITECT
KEVIN C. LEAMY
No. 4965
Signature
12/31/26
Renewal Date
2.01.2026
Date
STATE OF CALIFORNIA

DRAWN : AM
CHECKED : KCL
SCALE: : AS SHOWN

SHEET TITLE:

LANDSCAPE IRRIGATION NOTES

SHEET

LI-2.0

29 OF 40 SHEETS

FUHRMAN LEAMY LAND GROUP HEREBY EXPRESSLY RESERVES ITS COMMON LAW COPYRIGHT AND OTHER PROPERTY RIGHTS IN THESE PLANS. THESE PLANS AND DRAWINGS ARE NOT TO BE REPRODUCED, CHANGED OR COPIED IN ANY FORM OR MANNER WHATSOEVER WITHOUT FIRST OBTAINING THE EXPRESS WRITTEN PERMISSION OF FUHRMAN LEAMY LAND GROUP NOR ARE THEY TO BE ASSIGNED TO ANY THIRD PARTY WITHOUT FIRST OBTAINING WRITTEN PERMISSION AND CONSENT.

WATER EFFICIENT LANDSCAPE WORKSHEET

FUHRMAN LEAMY LAND GROUP
DESIGN · SERVICE · SOLUTIONS

PROJECT: JM-51 PARK
LOCATION: ROSEVILLE, CA
JOB#: CRV: 25026
DATE: 11.21.2025

Appendix B

This w orksheet is filled out by the project applicant and it is a required element of the Landscape Documentation Package.

Reference Evapotranspiration (ETo) 52.2

Hydrozone # /Planting Description[a]	Plant Factor (PF)	Irrigation Method[b]	Irrigation Efficiency (IE)[c]	ETAF (PF/IE)	Landscape Area (sq. ft.)	ETAF x Area	Estimated Total Water Use (ETWU)[d]
Regular Landscape Areas							
					0		
				Totals	0	0.00	0.00
Special Landscape Areas							
J1 WS Turf				1	3,445	3445.00	111494
J2 WS Turf				1	3,450	3450.00	111656
J3 Tree				1	40	40.00	1295
J4 Tree				1	30	30.00	971
J5 WS Turf				1	3,445	3445.00	111494
J6 WS Turf				1	3,445	3445.00	111494
J7 WS Turf				1	3,660	3660.00	118452
J8 WS Turf				1	2,175	2175.00	70392
J9 WS Turf				1	2,175	2175.00	70392
J10 Tree				1	110	110.00	3560
J11 WS Turf				1	1,885	1885.00	61006
J12 WS Turf				1	2,175	2175.00	70392
J13 WS Turf				1	2,175	2175.00	70392
J14 Tree				1	70	70.00	2265
J15 WS Turf				1	2,720	2720.00	88030
J16 Shrub/GC				1	1,880	1880.00	60844
J17 WS Turf				1	2,800	2800.00	90619
J18 Tree				1	80	80.00	2589
J19 WS Turf				1	3,450	3450.00	111656
J20 Tree				1	110	110.00	3560
J21 WS Turf				1	3,445	3445.00	111494
J22 Shrub/GC				1	2,740	2740.00	88677
J23 WS Turf				1	3,450	3450.00	111656
J24 WS Turf				1	3,450	3450.00	111656
J25 Tree				1	80	80.00	2589
J26 WS Turf				1	3,445	3445.00	111494
J27 Shrub/GC				1	1,405	1405.00	45471
				Totals	57,335	57335.00	1855590
Non Irrigated Landscape Areas							
Water Feature				1	0		
Non Irrigated					0		
				Totals	0	0.00	0
						ETWU Total	1855590
						Maximum Allowed Water Allowance (MAWA)e	1855590

[a] *Hydrozone #/Planting Descrip.* E.g. 1.) front lawn 2.) low water use plantings 3.) medium water use planting

[b] *Irrigation Method* overhead spray or drip

[c] *Irrigation Efficiency* 0.75 for spray head, 0.81 for drip

[d] *ETWU (Annual Gallons Required) =* *Eto x 0.62 x ETAF x Area* where 0.62 is a conversion factor that converts acre-inches per acre per year to gallons per square foot per year.

[e] *MAWA (Annual Gallons Allowed) =* *(Eto) (0.62) [(ETAF x LA) + ((1-ETAF) x SLA)]* w here 0.62 is a conversion factor that converts acre-inches per acre per year to gallons per square foot per year, LA is the total landscape area in square feet, SLA is the total special landscape area in square feet, and ETAF is .55 for residential areas

ETAF Calculations

Regular Landscape Areas

Total ETAF x Area	0
Total Area	0
Average ETAF	

Average ETAF for Regular Landscape Areas must be 0.55 or below for residential areas, and 0.45 or below for non-residential

All Landscape Areas

Total ETAF x Area	57335
Total Area	57,335
Sitewide ETAF	**1.00**

IRRIGATION SCHEDULE - COMMERCIAL

FUHRMAN LEAMY LAND GROUP
DESIGN · SERVICE · SOLUTIONS

PROJECT: JM-51 PARK
LOCATION: ROSEVILLE, CA
JOB#: CRV: 25026
DATE: 11.21.2025

CONTROLLER: J

VALVE	GPM	Landscape Area (S.F.)	PLANT TYPE	WATER USE	IRRIGATION METHOD	WATERING DAYS/WK	MAX RUN TIME/ CYCLE	ESTABLISHMENT PERIOD										MAINTENANCE PERIOD										PER VALVE		
								JAN	FEB	MAR	APR	MAY	JUN	JULY	AUG	SEP	OCT	NOV	DEC	JAN	FEB	MAR	APR	MAY	JUN	JULY	AUG	SEP	OCT	NOV	DEC	
								MONTHLY ETO												MONTHLY ETO												
								1.1	1.7	3.1	4.7	6.2	7.7	8.5	7.3	5.6	3.7	1.7	1	1.1	1.7	3.1	4.7	6.2	7.7	8.5	7.3	5.6	3.7	1.7	1	
								RUN TIME IN MINUTES/DAY												RUN TIME IN MINUTES/DAY												PR (In/Yr)	MAWA (Gal/Yr)	ETWU (Gal/Yr)
J1	28.9	3,445	WS Turf	High	Stream Spray/Rotors	5	7.43	5	8	14	22	29	36	40	34	26	17	8	5	4	6	11	17	22	28	30	26	20	13	6	4	30.31	111494	111494
J2	34.7	3,450	WS Turf	High	Stream Spray/Rotors	5	6.20	4	7	12	18	24	30	33	28	22	14	7	4	3	5	9	14	19	23	25	22	17	11	5	3	30.31	111656	111656
J3	4.0	40	Tree	Med	Bubblers/Drip	4	0.62	0	0	1	1	2	2	2	2	2	1	0	0	0	0	1	1	1	2	2	2	2	1	1	0	0	21.67	1295	1295
J4	3.0	30	Tree	Med	Bubblers/Drip	4	0.62	0	0	1	1	2	2	2	2	2	1	0	0	0	0	1	1	1	2	2	2	2	1	1	0	0	21.67	971	971
J5	17.8	3,445	WS Turf	High	Stream Spray/Rotors	5	12.06	8	13	23	36	47	58	64	55	42	28	13	8	6	10	18	27	36	45	49	42	33	22	10	6	30.31	111494	111494
J6	28.9	3,445	WS Turf	High	Stream Spray/Rotors	5	7.43	5	8	14	22	29	36	40	34	26	17	8	5	4	6	11	17	22	28	30	26	20	13	6	4	30.31	111494	111494
J7	29.6	3,660	WS Turf	High	Stream Spray/Rotors	5	7.71	5	8	15	23	30	37	41	35	27	18	8	5	4	6	12	17	23	29	32	27	21	14	6	4	30.31	118452	118452
J8	17.8	2,175	WS Turf	High	Stream Spray/Rotors	5	7.62	5	8	15	22	30	37	41	35	27	18	8	5	4	6	11	17	23	28	31	27	21	14	6	4	30.31	70392	70392
J9	30.7	2,175	WS Turf	High	Stream Spray/Rotors	5	4.42	3	5	9	13	17	21	24	20	15	10	5	3	2	4	7	10	13	16	18	16	12	8	4	2	30.31	70392	70392
J10	11.0	110	Tree	Med	Bubblers/Drip	4	0.62	0	0	1	1	2	2	2	2	2	1	0	0	0	0	1	1	1	2	2	2	2	1	1	0	0	21.67	3560	3560
J11	15.2	1,885	WS Turf	High	Stream Spray/Rotors	5	7.73	5	8	15	23	30	37	41	35	27	18	8	5	4	6	12	18	23	29	32	27	21	14	6	4	30.31	61006	61006
J12	17.8	2,175	WS Turf	High	Stream Spray/Rotors	5	7.62	5	8	15	22	30	37	41	35	27	18	8	5	4	6	11	17	23	28	31	27	21	14	6	4	30.31	70392	70392
J13	26.8	2,175	WS Turf	High	Stream Spray/Rotors	5	5.06	3	5	10	15	20	24	27	23	18	12	5	3	3	4	8	11	15	19	21	18	14	9	4	2	30.31	70392	70392
J14	7.0	70	Tree	Med	Bubblers/Drip	4	0.62	0	0	1	1	2	2	2	2	2	1	0	0	0	0	1	1	1	2	2	2	2	1	1	0	0	21.67	2265	2265
J15	23.4	2,720	WS Turf	High	Stream Spray/Rotors	5	7.25	5	8	14	21	28	35	39	33	25	17	8	5	4	6	11	16	22	27	30	25	20	13	6	3	30.31	88030	88030
J16	11.1	1,880	Shrub/GC	Low	Bubblers/Drip	3	10.56	4	7	12	18	24	29	33	28	21	14	7	4	3	5	9	14	18	23	25	21	16	11	5	3	17.14	60844	60844
J17	25.1	2,800	WS Turf	High	Stream Spray/Rotors	5	6.95	5	7	14	20	27	34	37	32	24	16	7	4	4	6	10	16	21	26	28	24	19	12	6	3	30.31	90619	90619
J18	8.0	80	Tree	Med	Bubblers/Drip	4	0.62	0	0	1	1	2	2	2	2	2	1	0	0	0	0	1	1	1	2	2	2	2	1	1	0	0	21.67	2589	2589
J19	32.7	3,450	WS Turf	High	Stream Spray/Rotors	5	6.58	5	7	13	19	26	32	35	30	23	15	7	4	3	5	10	15	20	24	27	23	18	12	5	3	30.31	111656	111656
J20	11.0	110	Tree	Med	Bubblers/Drip	4	0.62	0	0	1	1	2	2	2	2	2	1	0	0	0	0	1	1	1	2	2	2	2	1	1	0	0	21.67	3560	3560
J21	26.6	3,445	WS Turf	High	Stream Spray/Rotors	5	8.07	6	9	16	24	31	39	43	37	28	19	9	5	4	7	12	18	24	30	33	28	22	14	7	4	30.31	111494	111494
J22	16.1	2,740	Shrub/GC	Low	Bubblers/Drip	3	10.61	4	7	12	18	24	30	33	28	22	14	7	4	3	5	9	14	18	23	25	22	17	11	5	3	17.14	88677	88677
J23	38.5	3,450	WS Turf	High	Stream Spray/Rotors	5	5.59	4	6	11	16	22	27	30	26	20	13	6	3	3	5	8	13	17	21	23	20	15	10	5	3	30.31	111656	111656
J24	34.7	3,450	WS Turf	High	Stream Spray/Rotors	5	6.20	4	7	12	18	24	30	33	28	22	14	7	4	3	5	9	14	19	23	25	22	17	11	5	3	30.31	111656	111656
J25	8.0	80	Tree	Med	Bubblers/Drip	4	0.62	0	0	1	1	2	2	2	2	2	1	0	0	0	0	1	1	1	2	2	2	2	1	1	0	0	21.67	2589	2589
J26	26.6	3,445	WS Turf	High	Stream Spray/Rotors	5	8.07	6	9	16	24	31	39	43	37	28	19	9	5	4	7	12	18	24	30	33	28	22	14	7	4	30.31	111494	111494
J27	8.4	1,405	Shrub/GC	Low	Bubblers/Drip	3	10.40	4	6	12	18	23	29	32	28	21	14	6	4	3	5	9	14	18	22	25	21	16	11	5	3	17.14	45471	45471
																														ESTIMATED PLANTED AREA AVERAGE PRECIPITATION IN INCHES/YEAR:			26.60		
																														TOTAL # OF VALVES:			27		
NON IRRIGATED LANDSCAPE AREA																																		
		0	Water Feature	High	Water Feature	5																										0	0	
		0	Non Irrigated		Non Irrigated																											0		
																														TOTAL # OF VALVES:			0		

IRRIGATED LA		
SHRUB	0	S.F
ANNUALS	0	S.F
TURF	0	S.F
TREE	0	S.F.
TEMP	0	S.F.
HA	**0**	**S.F.**

IRRIGATED SPECIAL LA		
SHRUB	6,025	S.F.
TURF	50,790	S.F.
TREE	520	S.F.
EDIBLE	0	S.F.
ACTIVE	0	S.F.
SLA	**57,335**	**S.F.**

NON IRRIGATED		
WATER FEATURE	0	S.F.
NON IRRIGATED	0	S.F.
SLA	**0**	**S.F.**

TOTAL AREA	
57,335	**S.F.**

WATER DEMAND		
Maximum Flow Demand	30	Gpm/Day
Watering Window of	8	Hours
# of Watering Days/Wk - Turf	5	Days
# of Watering Days/Wk - Shrub	3	Days

SOILS		YEARLY ETO	
Texture	Clay and Clay Loam	Roseville	52.2

MAWA = (YEARLY ETO) (0.62) [(0.45 x LA) + (0.55 x SLA)] MAWA 1,855,590

ETWU = (YEARLY ETO)(0.62)((HA x Ks/IE)+SLA) ETWU 1,855,590

ETWU 1,855,590 > **MAWA** 1,855,590

NOTES:
1. Run Time in Minutes/Day shall occur on each Watering Day per Week. Run Time = Weekly ETO*60/(PR*IE)*Watering Days
2. Any irrigation valve w hose Precipitation Rate (PR) exceeds the Soil Infiltration Rate (SIR), shall be programmed using the Cycle and Soak feature.
   Run times in minutes per day shall be divided into the necessary amount of cycles to avoid runoff. Do not exceed Max Cycle Time.
   Maximum Run Time per Cycle show n becomes invalid if there is a slope involved. Visual analysis in the field w ill be needed to determine Cycle time.
3. Any landscaped area graded to a slope of 10:1 or greater shall be programmed using the Cycle and Soak feature.
   Run times in minutes per day shall be divided in half for each cycle. Do not exceed Max. Cycle Time.
4. Controllers need to be programmed using multiple program features in order to obtain the maximum flow demand.
   If necessary, program multiple valves to run simultaneously so that the Maximum Flow Demand is not
5. Establishment period is 6 months.

ESTIMATED TOTAL WATER USE:
This estimate of water use is based on watering properly maintained, established plantings with a water use management plan in place. In providing this estimate of water use, it is recognized that Fuhrman Leamy Land Group does not have control over the maintenance of the landscaped areas or management of water use. This estimate of water use is based on AB1881 requirements and Fuhrman Leamy Land Group's reasonable professional judgement and experience and does not constitute a warranty, express or implied, that the actual water use will not vary from this estimate.

FOR COUNCIL APPROVAL ONLY

WATER EFFICIENT LANDSCAPE ORDINANCE

SUBMITTAL DOCUMENTATION COVERSHEET

PROJECT: JM-51 PARK
JOB#: CRV: 25026
DATE: 11.21.2025

FUHRMAN LEAMY LAND GROUP
DESIGN · SERVICE · SOLUTIONS

APPLICANT

CONTACT NAME:	ANGELA MILLER
TITLE:	SENIOR PROJECT MANAGER
COMPANY NAME:	FUHRMAN LEAMY LAND GROUP
STREET ADDRESS:	3400 DOUGLAS BLVD. SUITE 275
CITY, STATE, ZIP:	ROSEVILLE, CA 95661
TELEPHONE #:	916.783.5263
FAX #:	n/a
EMAIL ADDRESS:	angelam@fllandgroup.com

PROPERTY OWNER AND/OR REPRESENTATIVE

CONTACT NAME:	TARA GEE
TITLE:	OWNER
COMPANY NAME:	CITY OF ROSEVILLE PARKS
STREET ADDRESS:	316 VERNON STREET SUITE 400
CITY, STATE, ZIP:	ROSEVILLE, CA 95768
TELEPHONE #:	916.774.5253
FAX #:	n/a
EMAIL ADDRESS:	Tgee@roseville.ca.us

PROJECT

STREET ADDRESS:	7060 LAKEHAVEN DRIVE
CITY, STATE, ZIP:	ROSEVILLE, CA
PARCEL, TRACT, OR LOT NUMBER:	-
LATTITUDE/LONGITUDE (Optional):	-
PROJECT TYPE:	PARK
TOTAL LANDSCAPE AREA:	57,335 S.F.
WATER SUPPLY TYPE:	RECYCLED

APPLICANT

"I agree to comply with the requirements of the water efficient landscape ordinance and submit a complete landscape documentation package."

Angela Miller — Applicant Signature
11.21.2025 — Date

MWELO CERTIFICATE OF COMPLETION

THE FOLLOWING LANDSCAPE DOCUMENTATION IS TO BE SUBMITTED TO THE BUILDING INSPECTOR AT TIME OF FINAL INSPECTION:

CERTIFICATE OF COMPLETION:	COMPLETED BY PROPERTY OWNER
CERTIFICATE OF INSTALLATION:	COMPLETED BY LANDSCAPE ARCHITECT OR LICENSED LANDSCAPE CONTRACTOR
SCHEDULE OF LANDSCAPE MAINTANENCE:	SEE IRRIGATION PLANS FOR LANDSCAPE MAINTENANCE SCHEDULES
SOIL MANAGEMENT REPORT:	CONTRACTOR TO PROVIDE SOILS FERTILITY REPORT.
LANDSCAPE AUDIT REPORTS:	PREPARED BY A CERTIFIED LANDSCAPE IRRIGATION AUDITOR

FUHRMAN LEAMY LAND GROUP
DESIGN · SERVICE · SOLUTIONS

3400 DOUGLAS BLVD., SUITE 275
ROSEVILLE, CALIFORNIA 95661
916.783.5263 • FLLANDGROUP.COM

JOB NO. : CRV: 25026

CITY OF ROSEVILLE APPROVAL

PROJECT:
JM-51PARK

7060 LAKEHAVEN DRIVE
ROSEVILLE, CA

CLIENT:
CITY OF ROSEVILLE

REVISIONS DATE
1
2
3
4

ISSUE		DATE
1	1ST SUBMITTAL	9.19.2025
2	2ND SUBMITTAL	10.22.2025
3	3RD SUBMITTAL	12.03.2025
4	4TH SUBMITTAL	2.03.2026
5		

REGISTERED LANDSCAPE ARCHITECT
KEVIN C. LEAMY
No. 4965
Signature
12/31/26
Renewal Date
2.01.2026
Date
STATE OF CALIFORNIA

DRAWN : AM
CHECKED : KCL
SCALE: : AS SHOWN

SHEET TITLE:
MWELO DOCUMENTATION

SHEET
LI-2.1
30 OF 40 SHEETS

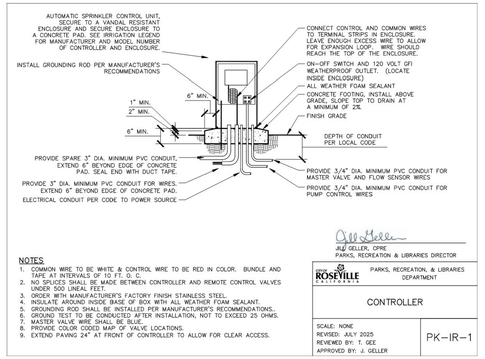

NOTES

1. COMMON WIRE TO BE WHITE & CONTROL WIRE TO BE RED IN COLOR. BUNDLE AND TAPE AT INTERVALS OF 10 FT. O. C.
2. NO SPLICES SHALL BE MADE BETWEEN CONTROLLER AND REMOTE CONTROL VALVES UNDER 500 LINEAL FEET.
3. ORDER WITH MANUFACTURER'S FACTORY FINISH, STAINLESS STEEL.
4. INSULATE AROUND INSIDE BASE OF BOX WITH ALL WEATHER FOAM SEALANT.
5. GROUNDING ROD SHALL BE INSTALLED PER MANUFACTURER'S RECOMMENDATIONS..
6. GROUND TEST TO BE CONDUCTED AFTER INSTALLATION, NOT TO EXCEED 25 OHMS.
7. MASTER VALVE WIRE SHALL BE BLUE.
8. PROVIDE COLOR CODED MAP OF VALVE LOCATIONS.
9. EXTEND PAVING 24" AT FRONT OF CONTROLLER TO ALLOW FOR CLEAR ACCESS.

Jeff Geller, CPRE
PARKS, RECREATION & LIBRARIES DIRECTOR

CITY OF ROSEVILLE CALIFORNIA — PARKS, RECREATION, & LIBRARIES DEPARTMENT

CONTROLLER

SCALE: NONE
REVISED: JULY 2025
REVIEWED BY: T. GEE
APPROVED BY: J. GELLER

PK–IR–1

A CONTROLLER

NOT TO SCALE — PR-25026-04

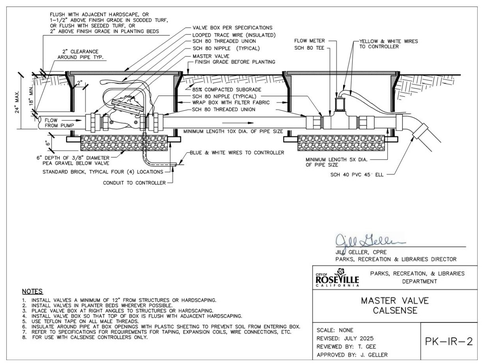

NOTES

1. INSTALL VALVES A MINIMUM OF 12" FROM STRUCTURES OR HARDSCAPING.
2. INSTALL VALVES IN PLANTER BEDS WHENEVER POSSIBLE.
3. PLACE VALVE BOX AT RIGHT ANGLES TO STRUCTURES OR HARDSCAPING.
4. INSTALL VALVE BOX SO THAT TOP OF BOX IS FLUSH WITH ADJACENT HARDSCAPING.
5. USE TEFLON TAPE ON ALL MALE THREADS.
6. INSULATE AROUND PIPE AT BOX OPENINGS WITH PLASTIC SHEETING TO PREVENT SOIL FROM ENTERING BOX.
7. REFER TO SPECIFICATIONS FOR REQUIREMENTS FOR TAPING, EXPANSION COILS, WIRE CONNECTIONS, ETC.
8. FOR USE WITH CALSENSE CONTROLLERS ONLY.

Jeff Geller, CPRE
PARKS, RECREATION & LIBRARIES DIRECTOR

CITY OF ROSEVILLE CALIFORNIA — PARKS, RECREATION, & LIBRARIES DEPARTMENT

MASTER VALVE CALSENSE

SCALE: NONE
REVISED: JULY 2025
REVIEWED BY: T. GEE
APPROVED BY: J. GELLER

PK–IR–2

B MASTER VALVE - CALSENSE

NOT TO SCALE — PR-25026-05

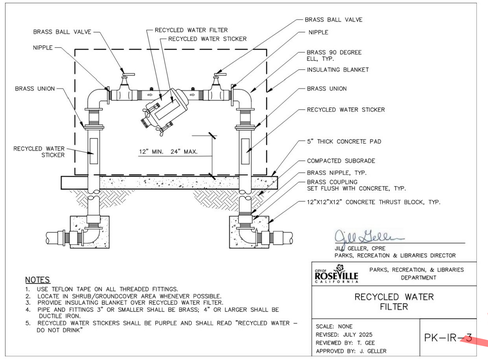

NOTES

1. USE TEFLON TAPE ON ALL THREADED FITTINGS.
2. LOCATE IN SHRUB/GROUNDCOVER AREA WHENEVER POSSIBLE.
3. PROVIDE INSULATING BLANKET OVER RECYCLED WATER FILTER.
4. PIPE AND FITTINGS 3" OR SMALLER SHALL BE BRASS; 4" OR LARGER SHALL BE DUCTILE IRON.
5. RECYCLED WATER STICKERS SHALL BE PURPLE AND SHALL READ "RECYCLED WATER – DO NOT DRINK"

Jeff Geller, CPRE
PARKS, RECREATION & LIBRARIES DIRECTOR

CITY OF ROSEVILLE CALIFORNIA — PARKS, RECREATION, & LIBRARIES DEPARTMENT

RECYCLED WATER FILTER

SCALE: NONE
REVISED: JULY 2025
REVIEWED BY: T. GEE
APPROVED BY: J. GELLER

PK–IR–3

C RECYCLED WATER FILTER

NOT TO SCALE — PR-25026-06

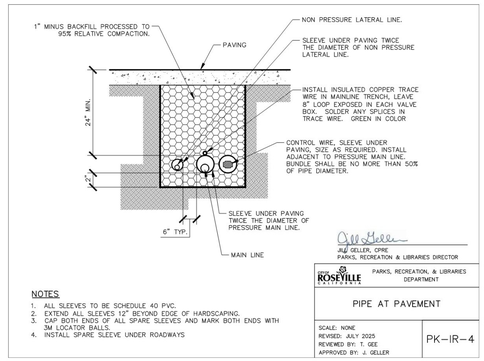

NOTES

1. ALL SLEEVES TO BE SCHEDULE 40 PVC.
2. EXTEND ALL SLEEVES 12" BEYOND EDGE OF HARDSCAPING.
3. CAP BOTH ENDS OF ALL SPARE SLEEVES AND MARK BOTH ENDS WITH 3M LOCATOR BALLS.
4. INSTALL SPARE SLEEVE UNDER ROADWAYS

Jeff Geller, CPRE
PARKS, RECREATION & LIBRARIES DIRECTOR

CITY OF ROSEVILLE CALIFORNIA — PARKS, RECREATION, & LIBRARIES DEPARTMENT

PIPE AT PAVEMENT

SCALE: NONE
REVISED: JULY 2025
REVIEWED BY: T. GEE
APPROVED BY: J. GELLER

PK–IR–4

D PIPE AT PAVEMENT

NOT TO SCALE — PR-25026-12

NOTES

1. RECLAIMED WATER REQUIRES BURIED TAPE LINE PER PUBLIC WORKS CONSTRUCTION STANDARDS.

Jeff Geller, CPRE
PARKS, RECREATION & LIBRARIES DIRECTOR

CITY OF ROSEVILLE CALIFORNIA — PARKS, RECREATION, & LIBRARIES DEPARTMENT

PIPE TRENCH

SCALE: NONE
REVISED: JULY 2025
REVIEWED BY: T. GEE
APPROVED BY: J. GELLER

PK–IR–5

E PIPE TRENCH

NOT TO SCALE — PR-25026-19

NOTES

1. COMPACT SOIL AROUND BOX TO 90% MINIMUM COMPACTION.
2. PLACE DRAIN ROCK PRIOR TO INSTALLING VALVE BOX.
3. GATE VALVE AND FITTINGS SHALL BE LINE SIZE UNLESS OTHERWISE NOTED.
4. USE TEFLON TAPE ON ALL THREADED FITTINGS.
5. LOCATE VALVES IN SHRUB/GROUNDCOVER AREAS WHENEVER POSSIBLE.
6. LOOP EXTRA TRACER WIRE UP TO TOP OF BOX.

Jeff Geller, CPRE
PARKS, RECREATION & LIBRARIES DIRECTOR

CITY OF ROSEVILLE CALIFORNIA — PARKS, RECREATION, & LIBRARIES DEPARTMENT

VALVE 3 INCH AND SMALLER

SCALE: NONE
REVISED: JULY 2025
REVIEWED BY: T. GEE
APPROVED BY: J. GELLER

PK–IR–10

F VALVE (3" & SMALLER)

NOT TO SCALE — PR-25026-11

NOTES

1. INSTALL VALVE BOXES SO THAT THE TOP OF THE BOX IS FLUSH WITH THE TOP OF THE ADJACENT HARDSCAPE.
2. USE TEFLON TAPE ON ALL THREADED CONNECTIONS.

Jeff Geller, CPRE
PARKS, RECREATION & LIBRARIES DIRECTOR

CITY OF ROSEVILLE CALIFORNIA — PARKS, RECREATION, & LIBRARIES DEPARTMENT

VALVE QUICK COUPLING

SCALE: NONE
REVISED: JULY 2025
REVIEWED BY: T. GEE
APPROVED BY: J. GELLER

PK–IR–13

G VALVE - QUICK COUPLING

NOT TO SCALE — PR-25026-14

NOTES

1. INSTALL VALVES A MINIMUM OF 12" FROM STRUCTURES OR HARDSCAPING.
2. INSTALL VALVES IN PLANTER BEDS WHEREVER POSSIBLE.
3. PLACE VALVE BOX AT RIGHT ANGLES TO STRUCTURES OR HARDSCAPING.
4. INSTALL VALVE BOX SO THAT TOP OF BOX IS FLUSH WITH ADJACENT HARDSCAPING.
5. USE TEFLON TAPE ON ALL MALE THREADS.
6. VALVES ON MAINLINES 3" AND LARGER REQUIRE SADDLE TAPS, 2 ½" AND SMALLER MAINLINE REQUIRES SCH 80 PVC TEE.
7. PROVIDE SCHEDULE 80 THREADED UNION ON BOTH UPSTREAM AND DOWNSTREAM SIDES.
8. INSULATE AROUND PIPE AT BOX OPENINGS WITH PLASTIC SHEETING TO PREVENT SOIL FROM ENTERING BOX.
9. REFER TO SPECIFICATIONS FOR REQUIREMENTS FOR TAPING, EXPANSION COILS, WIRE CONNECTIONS, ETC.
10. ALL VALVES SHALL BE TAGGED INDICATING STATION #'S.
11. ALL VALVE BOXES SHALL HAVE STATION #'S PERMANENTLY BURNED ON VALVE BOX LIDS. MARKING SHALL BE AS FOLLOWS:
    TURF VALVES: T#
    LANDSCAPE AREA VALVES: L#
    BUBBLER VALVES: B#
12. REFER TO PK–51 FOR INFIELD VALVES DETAILS AND INFIELD VALVE BOX LAYOUT

Jeff Geller, CPRE
PARKS, RECREATION & LIBRARIES DIRECTOR

CITY OF ROSEVILLE CALIFORNIA — PARKS, RECREATION, & LIBRARIES DEPARTMENT

VALVE REMOTE CONTROL AT GRADE

SCALE: NONE
REVISED: JULY 2025
REVIEWED BY: T. GEE
APPROVED BY: J. GELLER

PK–IR–14

H VALVE - REMOTE CONTROL AT GRADE

NOT TO SCALE — PR-25026-15

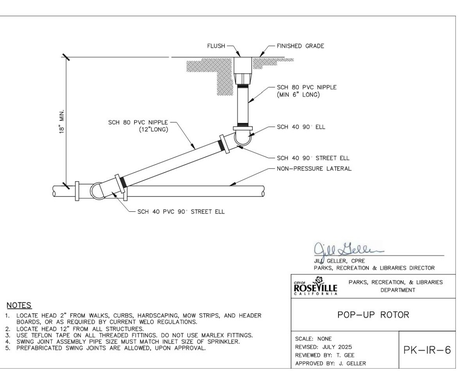

NOTES

1. LOCATE HEAD 2" FROM WALKS, CURBS, HARDSCAPING, MOW STRIPS, AND HEADER BOARDS, OR AS REQUIRED BY CURRENT WELO REGULATIONS.
2. LOCATE HEAD 12" FROM ALL STRUCTURES.
3. USE TEFLON TAPE ON ALL THREADED FITTINGS. DO NOT USE MARLEX FITTINGS.
4. SWING JOINT ASSEMBLY PIPE SIZE MUST MATCH INLET SIZE OF SPRINKLER.
5. PREFABRICATED SWING JOINTS ARE ALLOWED, UPON APPROVAL.

Jeff Geller, CPRE
PARKS, RECREATION & LIBRARIES DIRECTOR

CITY OF ROSEVILLE CALIFORNIA — PARKS, RECREATION, & LIBRARIES DEPARTMENT

POP-UP ROTOR

SCALE: NONE
REVISED: JULY 2025
REVIEWED BY: T. GEE
APPROVED BY: J. GELLER

PK–IR–6

I POP-UP ROTOR

NOT TO SCALE — PR-25026-07

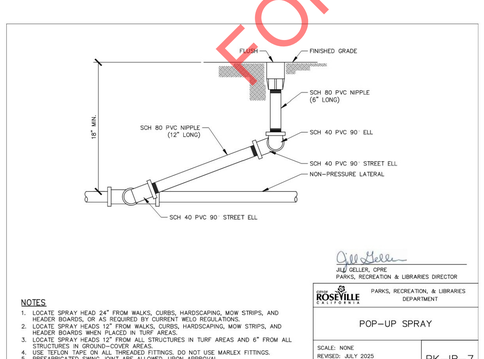

NOTES

1. LOCATE SPRAY HEAD 24" FROM WALKS, CURBS, HARDSCAPING, MOW STRIPS, AND HEADER BOARDS, OR AS REQUIRED BY CURRENT WELO REGULATIONS.
2. LOCATE SPRAY HEADS 12" FROM WALKS, CURBS, HARDSCAPING, MOW STRIPS, AND HEADER BOARDS WHEN PLACED IN TURF AREAS.
3. LOCATE SPRAY HEADS 12" FROM ALL STRUCTURES IN TURF AREAS AND 6" FROM ALL STRUCTURES IN GROUND–COVER AREAS.
4. USE TEFLON TAPE ON ALL THREADED FITTINGS. DO NOT USE MARLEX FITTINGS.
5. PREFABRICATED SWING JOINT ARE ALLOWED, UPON APPROVAL.
6. 6" LONG SCH 80 PVC RISER NIPPLE NOT REQUIRED FOR 12" POPUP HEADS.

Jeff Geller, CPRE
PARKS, RECREATION & LIBRARIES DIRECTOR

CITY OF ROSEVILLE CALIFORNIA — PARKS, RECREATION, & LIBRARIES DEPARTMENT

POP-UP SPRAY

SCALE: NONE
REVISED: JULY 2025
REVIEWED BY: T. GEE
APPROVED BY: J. GELLER

PK–IR–7

J POP-UP SPRAY

NOT TO SCALE — PR-25026-08

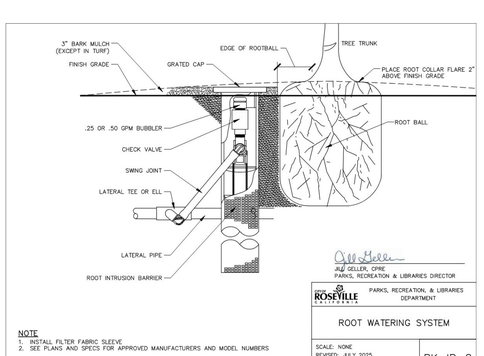

NOTE

1. INSTALL FILTER FABRIC SLEEVE.
2. SEE PLANS AND SPECS FOR APPROVED MANUFACTURERS AND MODEL NUMBERS

Jeff Geller, CPRE
PARKS, RECREATION & LIBRARIES DIRECTOR

CITY OF ROSEVILLE CALIFORNIA — PARKS, RECREATION, & LIBRARIES DEPARTMENT

ROOT WATERING SYSTEM

SCALE: NONE
REVISED: JULY 2025
REVIEWED BY: T. GEE
APPROVED BY: J. GELLER

PK–IR–8

K ROOT WATERING SYSTEM

NOT TO SCALE — PR-25026-09

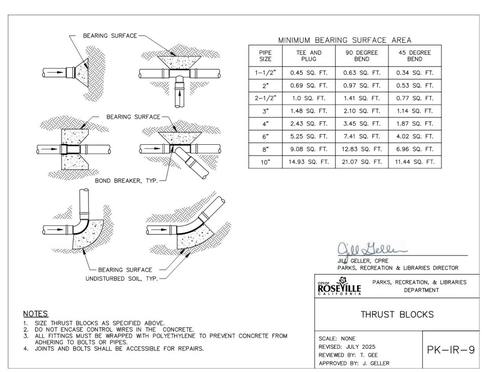

MINIMUM BEARING SURFACE AREA

PIPE SIZE	TEE AND PLUG	90 DEGREE BEND	45 DEGREE BEND
1–1/2"	0.45 SQ. FT.	0.63 SQ. FT.	0.34 SQ. FT.
2"	0.69 SQ. FT.	0.97 SQ. FT.	0.53 SQ. FT.
2–1/2"	1.0 SQ. FT.	1.41 SQ. FT.	0.77 SQ. FT.
3"	1.48 SQ. FT.	2.10 SQ. FT.	1.14 SQ. FT.
4"	2.43 SQ. FT.	3.45 SQ. FT.	1.87 SQ. FT.
6"	5.25 SQ. FT.	7.41 SQ. FT.	4.02 SQ. FT.
8"	9.08 SQ. FT.	12.83 SQ. FT.	6.96 SQ. FT.
10"	14.93 SQ. FT.	21.07 SQ. FT.	11.44 SQ. FT.

NOTES

1. SIZE THRUST BLOCKS AS SPECIFIED ABOVE.
2. DO NOT ENCASE CONTROL WIRES IN THE CONCRETE.
3. ALL FITTINGS MUST BE WRAPPED WITH POLYETHYLENE TO PREVENT CONCRETE FROM ADHERING TO BOLTS OR PIPES.
4. JOINTS AND BOLTS SHALL BE ACCESSIBLE FOR REPAIRS.

Jeff Geller, CPRE
PARKS, RECREATION & LIBRARIES DIRECTOR

CITY OF ROSEVILLE CALIFORNIA — PARKS, RECREATION, & LIBRARIES DEPARTMENT

THRUST BLOCKS

SCALE: NONE
REVISED: JULY 2025
REVIEWED BY: T. GEE
APPROVED BY: J. GELLER

PK–IR–9

L THRUST BLOCKS

NOT TO SCALE — PR-25026-10

FOR COUNCIL APPROVAL ONLY

FUHRMAN LEAMY LAND GROUP HEREBY EXPRESSLY RESERVES ITS COMMON LAW COPYRIGHT AND OTHER PROPERTY RIGHTS IN THESE PLANS. THESE PLANS AND DRAWINGS ARE NOT TO BE REPRODUCED, CHANGED OR COPIED IN ANY FORM OR MANNER WHATSOEVER WITHOUT FIRST OBTAINING THE EXPRESS WRITTEN PERMISSION OF FUHRMAN LEAMY LAND GROUP NOR ARE THEY TO BE ASSIGNED TO ANY THIRD PARTY WITHOUT FIRST OBTAINING WRITTEN PERMISSION AND CONSENT.

FUHRMAN LEAMY
LAND GROUP
DESIGN • SERVICE • SOLUTIONS

3400 DOUGLAS BLVD., SUITE 275
ROSEVILLE, CALIFORNIA 95661
916.783.5263 • FLLANDGROUP.COM

JOB NO. : CRV- 25026

CITY OF ROSEVILLE APPROVAL

PROJECT:

JM-51PARK

7060 LAKEHAVEN DRIVE
ROSEVILLE, CA

CLIENT:
CITY OF ROSEVILLE

REVISIONS	DATE
1	
2	
3	
4	
5	

ISSUE		DATE
1	1ST SUBMITTAL	9.19.2025
2	2ND SUBMITTAL	10.22.2025
3	3RD SUBMITTAL	12.03.2025
4	4TH SUBMITTAL	2.03.2026
5		

REGISTERED LANDSCAPE ARCHITECT
KEVIN C. LEAMY
No. 4965
12/31/26
Renewal Date
2.01.2026
Date
STATE OF CALIFORNIA

DRAWN : AM
CHECKED : KCL
SCALE: : AS SHOWN

SHEET TITLE:

LANDSCAPE IRRIGATION DETAILS

SHEET

LI-2.2

31 OF 40 SHEETS

FUHRMAN LEAMY LAND GROUP HEREBY EXPRESSLY RESERVES ITS COMMON LAW COPYRIGHT AND OTHER PROPERTY RIGHTS IN THESE PLANS. THESE PLANS AND DRAWINGS ARE NOT TO BE REPRODUCED, CHANGED OR COPIED IN ANY FORM OR MANNER WHATSOEVER WITHOUT FIRST OBTAINING THE EXPRESS WRITTEN PERMISSION OF FUHRMAN LEAMY LAND GROUP NOR ARE THEY TO BE ASSIGNED TO ANY THIRD PARTY WITHOUT FIRST OBTAINING WRITTEN PERMISSION AND CONSENT

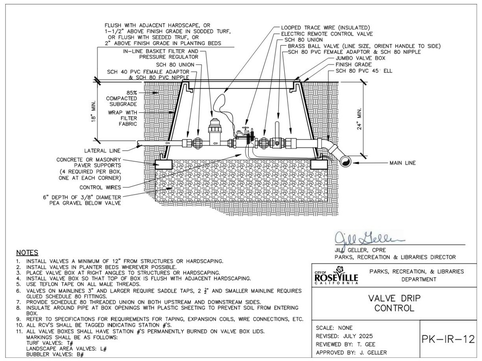

NOTES
1. INSTALL VALVES A MINIMUM OF 12" FROM STRUCTURES OR HARDSCAPING.
2. INSTALL VALVES IN PLANTER BEDS WHEREVER POSSIBLE.
3. PLACE VALVE BOX AT RIGHT ANGLES TO STRUCTURES OR HARDSCAPING.
4. INSTALL VALVE BOX SO THAT IT IS FLUSH WITH ADJACENT HARDSCAPING.
5. USE TEFLON TAPE ON ALL MALE THREADS.
6. VALVES ON MAINLINES 3" AND LARGER REQUIRE SADDLE TAPS, 2 1/2" AND SMALLER MAINLINE REQUIRES GLUED SCHEDULE 80 FITTINGS.
7. PROVIDE SCHEDULE 80 THREADED UNION ON BOTH UPSTREAM AND DOWNSTREAM SIDES.
8. INSULATE AROUND PIPE AT BOX OPENINGS WITH PLASTIC SHEETING TO PREVENT SOIL FROM ENTERING BOX.
9. REFER TO SPECIFICATIONS FOR REQUIREMENTS FOR TAPING, EXPANSION COILS, WIRE CONNECTIONS, ETC.
10. ALL RCV'S SHALL BE TAGGED INDICATING STATION #'S.
11. ALL VALVE BOXES SHALL HAVE STATION #'S PERMANENTLY BURNED ON VALVE BOX LIDS. MARKINGS SHALL BE AS FOLLOWS:
TURF VALVES: T#
LANDSCAPE AREA VALVES: L#
BUBBLER VALVES: B#

JAY GELLER, CPRE
PARKS, RECREATION & LIBRARIES DIRECTOR
CITY OF ROSEVILLE CALIFORNIA
PARKS, RECREATION, & LIBRARIES DEPARTMENT

VALVE DRIP CONTROL

SCALE: NONE
REVISED: JULY 2025
REVIEWED BY: T. GEE
APPROVED BY: J. GELLER

PK–IR–12

A VALVE - DRIP CONTROL
NOT TO SCALE — PR-25026-13

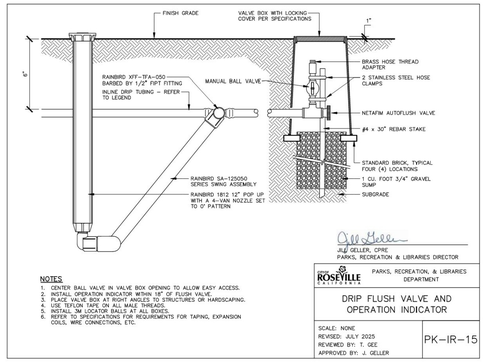

NOTES
1. CENTER BALL VALVE IN VALVE BOX OPENING TO ALLOW EASY ACCESS.
2. INSTALL OPERATION INDICATOR WITHIN 18" OF FLUSH VALVE.
3. PLACE VALVE BOX AT RIGHT ANGLES TO STRUCTURES OR HARDSCAPING.
4. USE TEFLON TAPE ON ALL MALE THREADS.
5. USE SCH 80 FITTINGS FOR ALL BURIED PIPE.
6. REFER TO SPECIFICATIONS FOR REQUIREMENTS FOR TAPING, EXPANSION COILS, WIRE CONNECTIONS, ETC.

JAY GELLER, CPRE
PARKS, RECREATION & LIBRARIES DIRECTOR
CITY OF ROSEVILLE CALIFORNIA
PARKS, RECREATION, & LIBRARIES DEPARTMENT

DRIP FLUSH VALVE AND OPERATION INDICATOR

SCALE: NONE
REVISED: JULY 2025
REVIEWED BY: T. GEE
APPROVED BY: J. GELLER

PK–IR–15

B DRIP FLUSH VALVE & OPERATION INDICATOR
1" = 1" — PR-25026-16

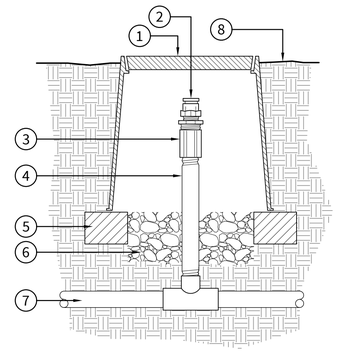

1. 6" ROUND VALVE BOX.
2. AIR/VACUUM RELIEF VALVE.
3. 1/2" PVC COUPLING: T x T.
4. 1/2" SCH 80 RISER. LENGTH AS REQUIRED.
5. STANDARD BRICK SUPPORTS. THREE EACH BOX.
6. 3/4" CRUSHED GRAVEL SUMP.
7. PVC PIPING AND FITTINGS.
8. FINISH GRADE.

C AIR/VACUUM RELIEF VALVE (PLUMBED TO PVC)
NOT TO SCALE — PR-25026-35

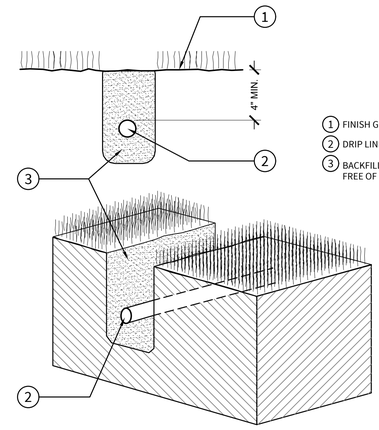

1. FINISH GRADE.
2. DRIP LINE TUBING.
3. BACKFILLED TRENCH FREE OF DEBRIS.

D DRIP LINE TRENCHING
NOT TO SCALE — PR-25026-31

1. DRIP LINE: 180 2-WAY TEE (CENTER FEED LAYOUT). 90 TEE (END FEED).
2. DRIP LINE TUBING. SEE LEGEND.
3. 3/4" SCH. 80 PVC NIPPLE.
4. PVC TEE: S x S x T.
5. FINISH GRADE.

E DRIP LINE START CONNECTION W/PVC RISER
NOT TO SCALE — PR-25026-36

DRIPLINE MAXIMUM LENGTH OF SINGLE LATERAL (FEET)

EMITTER SPACING		12"		18"		24"
EMITTER FLOW RATE (GPH)		0.26	0.4	0.6	0.26	0.4	0.6	0.4	0.6
SLOPE	0%	91	127	106	96	85	177	155	125	91	151
	2%	262	427	320	290	194	479	390	274	468	348
	5%	353	534	400	322	244	763	574	406	749	565
	10%	412	616	462	344	277	944	753	507	944	708

DRIPLINE FLOW PER 100 FEET

GRAPHIC	0.26 GPH DRIPPER		0.4 GPH DRIPPER		0.6 GPH DRIPPER		0.9 GPH DRIPPER	
EMITTER SPACING	GPH	GPM	GPH	GPM	GPH	GPM	GPH	GPM
12"	26.40	0.44	40.00	0.67	61.00	1.02	92.00	1.53
18"	17.58	0.29	26.67	0.44	40.00	0.68	61.00	1.02
24"	N/A	N/A	N/A	N/A	31.00	0.51	46.00	0.77

DRIPLINE GENERAL GUIDELINES FOR WATERING TIME

	TURF		SHRUB & GROUND COVER	
	CLAY	LOAM	CLAY	LOAM	SAND
DRIPPER FLOW (GPH)	0.26	0.4	0.6	0.26	0.4	0.6
DRIPPER INTERVAL	12"	12"	12"	18"	18"	12"
LATERAL DRIVE SPACING	18"–24"	18"–24"	12"–18"	18"–24"	18"–24"	18"–24"
APPLICATION RATE (IN/HR)	.06–0.10	.45–.35	.06–.10	.19–.21	.28–.21	.72–.58
TIME TO APPLY 1/4"	7hr–150	35–40	6hr–22	7hr–107	52–75	21–28

SUPPLY AND EXHAUST HEADER SIZING CHART

STEP 1: ADD LENGTH OF ALL TECHLINE LATERAL TUBING CONNECTED TO THE HEADER.
STEP 2: ADD TOGETHER THE GPH FLOW RATE OF ALL EMITTERS ON THE LATERALS.
STEP 3: LOCATE THE GPH TOTAL FROM APPLIED ON EACH SIDE OF THE TEST LENGTH ON THE CHART FOR THE SIZE OF HEADER YOU ARE USING. FOLLOW THE LINE TO THE RIGHT TO THE SIZE OF LOG TEST FOR THE TOTAL GPM AT TWO HEADER.
STEP 4: USE THE SMALLEST HEADER SIZE POSSIBLE.

1 TO 5 GPM	3/4" HEADER	6 TO 10 GPM	1" HEADER
10 TO 20 GPM	1 1/4" HEADER	21 TO 30 GPM	1 1/2" HEADER

NOTES
1. USE SUPPLY AND EXHAUST HEADER SIZING CHART UNLESS NOTED ON PLANS.
2. REFER TO PLANS FOR LOCATION OF SUPPLY AND EXHAUST AREA PER LINE WEIGHT AND NOTES.
3. LAY HEADER AND SETS TO BE LOCATED AT THE HIGHEST ELEVATION OF EACH AREA.
4. DRIP INDICATOR AND FLUSH VALVE TO BE LOCATED AT THE LOWEST ELEVATION OF EACH AREA OF DRIP AND INSTALLED PER PLANS, STANDARDS AND SPECIFICATIONS

JAY GELLER, CPRE
PARKS, RECREATION & LIBRARIES DIRECTOR
CITY OF ROSEVILLE CALIFORNIA
PARKS, RECREATION, & LIBRARIES DEPARTMENT

TYPICAL DRIPLINE DRIPGRID REQUIREMENTS

SCALE: NONE
REVISED: JULY 2025
REVIEWED BY: T. GEE
APPROVED BY: J. GELLER

PK–IR–16

F TYPICAL DRIPLINE DRIPGRID REQUIREMENTS
NOT TO SCALE — PR-25026-57

1. STRIP WIRES APPROX. 3/8" FROM ENDS - TWIST TOGETHER.
2. APPLY THE SCOTCHLOK ELECTRICAL CONNECTOR AND TWIST IN A CLOCKWISE DIRECTION.
3. INSERT THE SPLICE INTO THE GEL-FILLED INSULATOR TUBE. PUSH PAST THE LOCKING FINGERS TO HOLD THE SCOTCHLOK CONNECTOR IN PLACE.
4. POSITION WIRE CHANNELS AND SNAP INSULATOR TUBE COVER CLOSED.
5. 3M "DBY" WIRE CONNECTOR OR APPROVED EQUAL.

G WIRE CONNECTION - 3M DBY
NOT TO SCALE — PR-25026-42

1. 10" ROUND VALVE BOX. HEAT BRAND "QCV" ON LID IN 2" HIGH CHARACTERS.
2. RECTANGULAR VALVE BOX W/BOLT DOWN COVER. HEAT BRAND VALVE STATION NO. ON LID IN 2" HIGH CHARACTERS.
3. EDGE OF LAWN, WALK, FENCE, CURB, ETC.

NOTES:
1. CENTER BOXES OVER VALVES.
2. PLACE BOXES IN GROUNDCOVER AREA WHERE POSSIBLE. TYPICAL.
3. PLACE BOXES PARALLEL TO EACH OTHER AND PERPENDICULAR TO EDGE OF HARDSCAPE.
4. VALVE BOX SHALL BE PURPLE FOR RECYCLE (PANTONE 512) FOR RECLAIMED WATER.

H VALVE BOX LAYOUT (RECYCLED)
NOT TO SCALE — PR-25026-41

FOR COUNCIL APPROVAL ONLY

FUHRMAN LEAMY
LAND GROUP
DESIGN • SERVICE • SOLUTIONS
3400 DOUGLAS BLVD., SUITE 275
ROSEVILLE, CALIFORNIA 95661
916.783.5263 • FLLANDGROUP.COM

JOB NO. : CRV: 25026

CITY OF ROSEVILLE APPROVAL

PROJECT:
JM-51PARK

7060 LAKEHAVEN DRIVE
ROSEVILLE, CA

CLIENT:
CITY OF ROSEVILLE

REVISIONS	DATE
△	
△	
△	
△	

ISSUE		DATE
1	1ST SUBMITTAL	9.19.2025
2	2ND SUBMITTAL	10.22.2025
3	3RD SUBMITTAL	12.03.2025
4	4TH SUBMITTAL	2.03.2026
5		

REGISTERED LANDSCAPE ARCHITECT
KEVIN C. LEAMY
No. 4965
Signature
12/31/26
Renewal Date
2.01.2026
Date
STATE OF CALIFORNIA

DRAWN : AM
CHECKED : KCL
SCALE: : AS SHOWN

SHEET TITLE:
LANDSCAPE IRRIGATION DETAILS

SHEET
LI-2.3
32 OF 40 SHEETS

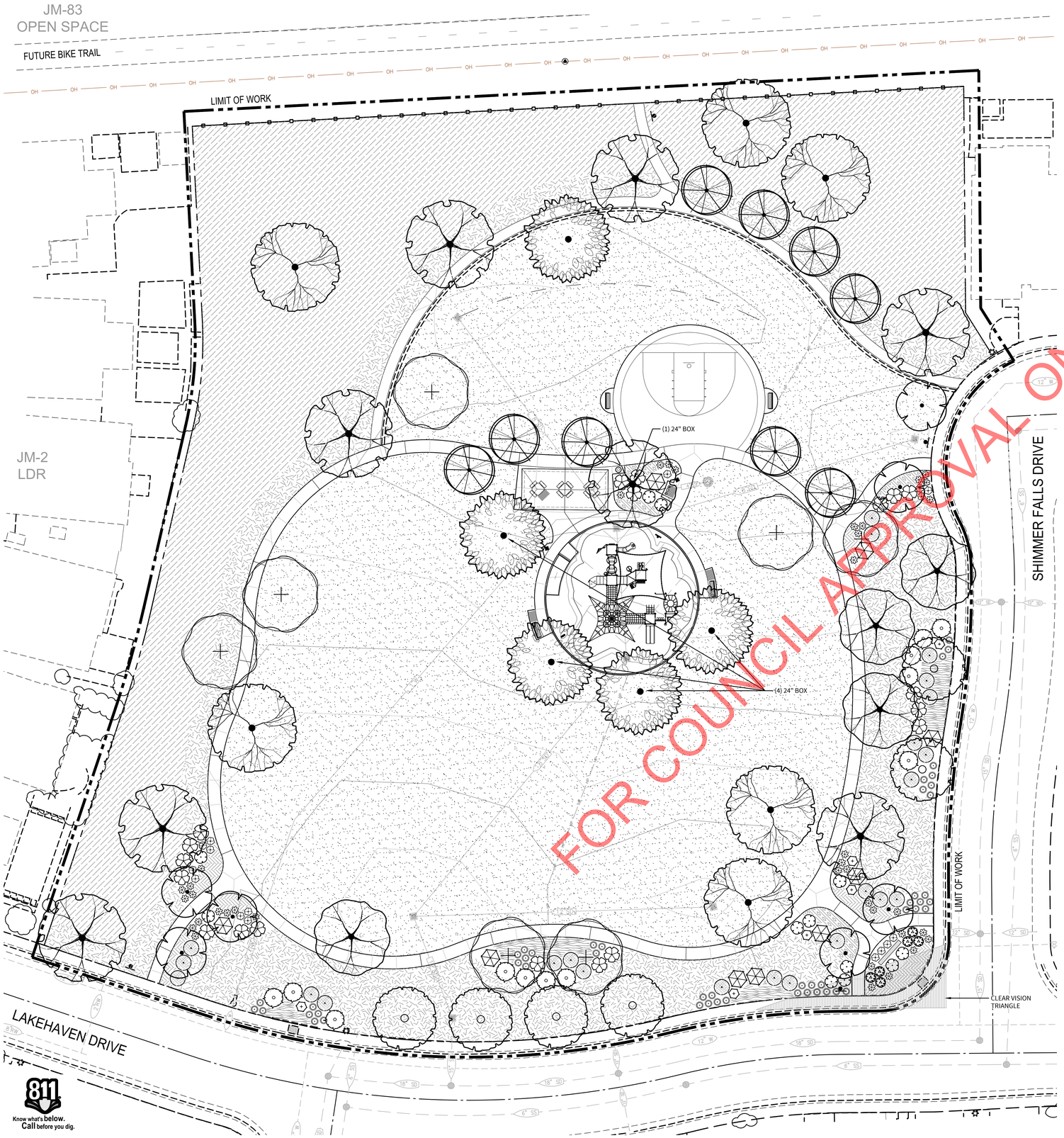

PLANT LIST & SCHEDULE

SYMBOL	BOTANICAL / COMMON NAME	SIZE	WATER USE	REMARKS	QTY
TREES					
	CELTIS RETICULATA NETLEAF HACKBERRY (40'x25')	15 GAL.	LOW	STD. NATIVE	7
	CHILOPSIS LINERIS DESERT WILLOW (20'X15')	15 GAL.	MODERATE	STD. NATIVE	7
	NYSSA SYLVATICA TUPELO (40'X20')	15 GAL.	MODERATE	STD.	9
	PISTACIA CHINENSIS 'KEITH DAVEY' FRUITLESS CHINESE PISTACHE (40'X35')	15 GAL.	MOD	STD.	4
	QUERCUS AGRIFOLIA COAST LIVE OAK (60'X40')	15 GAL. 24" BOX	VERY LOW	STD. NATIVE	7 1
	QUERCUS LOBATA VALLEY OAK (60'X40')	15 GAL. 24" BOX	LOW	STD. NATIVE	1 4
	QUERCUS WISLIZENI INTERIOR LIVE OAK (60'x40')	15 GAL.	LOW	STD. NATIVE	6
	ULMUS PROPINQUA `EMERALD SUNSHINE` EMERALD SUNSHINE ELM (35'X25')	15 GAL.	MOD	STD.	8
SHRUBS					
	ACACIA REDOLENS 'LOW BOY' LOW BOY BANK CATCLAW	5 GAL.	LOW	--	12
	ARCTOSTAPHYLOS X 'JOHN DOURLEY` JOHN DOURLEY MANZANITA	5 GAL.	LOW	--	23
	CISTUS X SKANBERGII CORAL ROCKROSE	5 GAL.	LOW	--	19
	ELYMUS CONDENSATUS `CANYON PRINCE` CANYON PRINCE WILD RYE	1 GAL.	LOW	--	49
	LANTANA MONTEVIDENSIS PURPLE TRAILING LANTANA	1 GAL.	LOW	--	12
	LOMANDRA LONGIFOLIA PLATINUM BEAUTY PLATINUM BEAUTY LOMANDRA	1 GAL.	LOW	--	38
	PHLOMIS FRUTICOSA JERUSALEM SAGE	1 GAL.	LOW	--	6
	ROSA X FLOWER CARPET WHITE FLOWER CARPET ROSE	2 GAL.	MOD	--	6
	SALVIA LEUCOPHYLLA 'POINT SAL' POINT SAL PURPLE SAGE	1 GAL.	VERY LOW	--	9
	SALVIA MICROPHYLLA `HOT LIPS` HOT LIPS SAGE	1 GAL.	LOW	--	16

SYMBOL	BOTANICAL / COMMON NAME	SIZE	WATER USE	SPACING	QTY
GROUND COVERS					
	ARCTOSTAPHYLOS UVA-URSI `MASSACHUSETTS` MASSACHUSETTS KINNIKINNICK	1 GAL.	LOW	72" o.c.	20
	DIANELLA REVOLUTA 'DTN03' BABY BLISS™ FLAX LILY	1 GAL.	LOW	18" o.c.	161
	HYDROSEED: NON-IRRIGATED NATIVE LANDMARK MIX 36LBS./AC.	HYDROSEED	NON IRRIGATED	--	26,847 SF
	EPILOBIUM CANUM CALIFORNIA FUCHSIA	1 GAL.	LOW	36" o.c.	75
	TURF 90/10 TALL FESCUE FESCUE BLEND	SEED	HIGH	--	50,881 SF
	BARK ONLY - 3" LAYER	---	--	--	15,445 SF

WATER EFFICIENT LANDSCAPE ORDINANCE:
"I have complied with the criteria of the Water Efficient Landscape Ordinance and applied such criteria for the efficient use of water in the landscape design plan."

Applicant Signature | 4965 License # | 9.2.2025 Date

SCALE: 1" = 20'-0"
0' 20' 80'
10' 40'

FUHRMAN LEAMY
LAND GROUP
DESIGN • SERVICE • SOLUTIONS
3400 DOUGLAS BLVD., SUITE 275
ROSEVILLE, CALIFORNIA 95661
916.783.5263 • FLLANDGROUP.COM

JOB NO. : CRV: 25026

CITY OF ROSEVILLE APPROVAL

PROJECT:
JM-51PARK

7060 LAKEHAVEN DRIVE
ROSEVILLE, CA

CLIENT:
CITY OF ROSEVILLE

REVISIONS	DATE
△	
△	
△	
△	

ISSUE		DATE
1	1ST SUBMITTAL	9.19.2025
2	2ND SUBMITTAL	10.22.2025
3	3RD SUBMITTAL	12.03.2025
4	4TH SUBMITTAL	2.03.2026
5		

REGISTERED LANDSCAPE ARCHITECT
KEVIN C. LEAMY
No. 4965
12/31/26 Renewal Date
2.01.2026 Date
STATE OF CALIFORNIA

DRAWN : AM
CHECKED : KCL
SCALE: : 1"=20'-0"

SHEET TITLE:
LANDSCAPE PLANTING PLAN & LEGEND

SHEET
LP-1.0
33 OF 40 SHEETS

FUHRMAN LEAMY LAND GROUP RESERVES ITS COMMON LAW COPYRIGHT AND OTHER PROPERTY RIGHTS IN THESE PLANS. THESE PLANS AND DRAWINGS ARE NOT TO BE REPRODUCED, CHANGED OR COPIED IN ANY FORM OR MANNER WHATSOEVER WITHOUT FIRST OBTAINING THE EXPRESS WRITTEN PERMISSION OF FUHRMAN LEAMY LAND GROUP NOR ARE THEY TO BE ASSIGNED TO ANY THIRD PARTY WITHOUT FIRST OBTAINING WRITTEN PERMISSION AND CONSENT.

FUHRMAN LEAMY LAND GROUP HEREBY EXPRESSLY RESERVES ITS COMMON LAW COPYRIGHT AND OTHER PROPERTY RIGHTS IN THESE PLANS. THESE PLANS AND DRAWINGS ARE NOT TO BE REPRODUCED, CHANGED OR COPIED IN ANY FORM OR MANNER WHATSOEVER WITHOUT FIRST OBTAINING THE EXPRESS WRITTEN PERMISSION OF FUHRMAN LEAMY LAND GROUP NOR ARE THEY TO BE ASSIGNED TO ANY THIRD PARTY WITHOUT FIRST OBTAINING WRITTEN PERMISSION AND CONSENT.

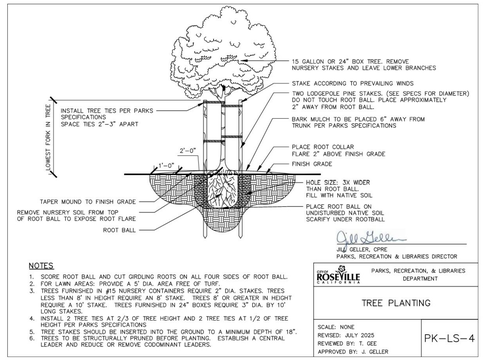

NOTES
1. SCORE ROOT BALL AND CUT GIRDLING ROOTS ON ALL FOUR SIDES OF ROOT BALL.
2. FOR LAWN AREAS: PROVIDE A 5' DIA. AREA FREE OF TURF.
3. TREES FURNISHED IN #15 NURSERY CONTAINERS REQUIRE 2" DIA. STAKES. TREES LESS THAN 8' IN HEIGHT REQUIRE AN 8' STAKE. TREES 8' OR GREATER IN HEIGHT REQUIRE A 10' STAKE. TREES FURNISHED IN 24" BOXES REQUIRE 3" DIA. BY 10' LONG STAKES.
4. INSTALL 2 TREE TIES AT 2/3 OF TREE HEIGHT AND 2 TREE TIES AT 1/2 OF TREE HEIGHT PER PARKS SPECIFICATIONS
5. TREE STAKES SHOULD BE INSERTED INTO THE GROUND TO A MINIMUM DEPTH OF 18".
6. TREES TO BE STRUCTURALLY PRUNED BEFORE PLANTING. ESTABLISH A CENTRAL LEADER AND REDUCE OR REMOVE CODOMINANT LEADERS.

Jill Geller, CPRE
PARKS, RECREATION & LIBRARIES DIRECTOR

CITY OF ROSEVILLE CALIFORNIA — PARKS, RECREATION, & LIBRARIES DEPARTMENT

TREE PLANTING

SCALE: NONE
REVISED: JULY 2025
REVIEWED BY: T. GEE
APPROVED BY: J. GELLER

PK-LS-4

A TREE PLANTING
NOT TO SCALE — PR-25026-03

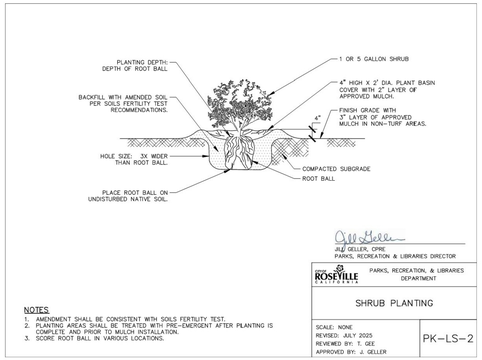

NOTES
1. AMENDMENT SHALL BE CONSISTENT WITH SOILS FERTILITY TEST.
2. PLANTING AREAS SHALL BE TREATED WITH PRE-EMERGENT AFTER PLANTING IS COMPLETE AND PRIOR TO MULCH INSTALLATION.
3. SCORE ROOT BALL IN VARIOUS LOCATIONS.

Jill Geller, CPRE
PARKS, RECREATION & LIBRARIES DIRECTOR

CITY OF ROSEVILLE CALIFORNIA — PARKS, RECREATION, & LIBRARIES DEPARTMENT

SHRUB PLANTING

SCALE: NONE
REVISED: JULY 2025
REVIEWED BY: T. GEE
APPROVED BY: J. GELLER

PK-LS-2

B SHRUB PLANTING
NOT TO SCALE — PR-25026-02

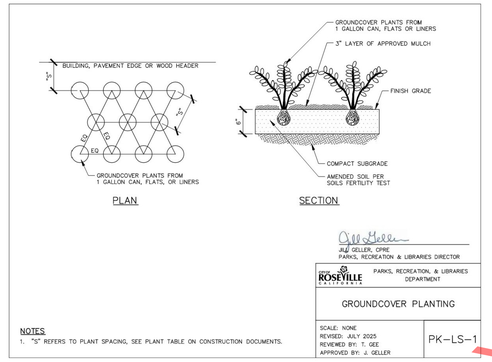

NOTES:
1. "S" REFERS TO PLANT SPACING, SEE PLANT TABLE ON CONSTRUCTION DOCUMENTS.

Jill Geller, CPRE
PARKS, RECREATION & LIBRARIES DIRECTOR

CITY OF ROSEVILLE CALIFORNIA — PARKS, RECREATION, & LIBRARIES DEPARTMENT

GROUNDCOVER PLANTING

SCALE: NONE
REVISED: JULY 2025
REVIEWED BY: T. GEE
APPROVED BY: J. GELLER

PK-LS-1

C GROUNDCOVER PLANTING
NOT TO SCALE — PR-25026-01

FOR CITY COUNCIL APPROVAL ONLY

CITY OF ROSEVILLE GENERAL PLANTING NOTES

1. CONTRACTOR SHALL VERIFY ALL SITE CONDITIONS PRIOR TO BIDDING AND CONSTRUCTION.
2. ALL TREES SHALL BE TAGGED AND/OR APPROVED BY OWNER & LANDSCAPE ARCHITECT. NURSERY SOURCES SHALL BE AT OWNER/LANDSCAPE ARCHITECT'S DISCRETION.
3. ALL SHRUBS AND GROUND COVER AREAS SHALL BE TOP DRESSED WITH A THREE (3") INCH LAYER "WALK-ON" FIR BARK PER PLANS AND SPECIFICATIONS.
4. ALL TREES (EXCEPT IN TURF AREAS), SHRUBS AND GROUND COVERS (INCLUDING THOSE ON SLOPES) SHALL HAVE WATERING BASINS BUILT UP AT LEAST TWO (2) TIMES THE DIAMETER OF THE ROOTBALL. TREE AND SHRUB BASINS SHALL BE A MINIMUM OF THREE (3") INCHES HIGH. GROUND COVER BASINS SHALL BE A MINIMUM OF TWO (2") INCHES HIGH.
5. ALL PLANT MATERIALS SHALL BE IMMEDIATELY "HAND" WATERED AFTER PLANTING AND CONTINUALLY MONITORED AND SUPPLEMENTALLY "HAND" WATERED DURING THE CONSTRUCTION AND CONTRACT MAINTENANCE PHASES AS NEEDED.
6. SUBSTITUTION OF PLANT MATERIALS WILL NOT BE ACCEPTABLE UNLESS OTHERWISE APPROVED BY THE LANDSCAPE ARCHITECT.
7. ALL PLANT MATERIALS DELIVERED TO THE SITE MUST HAVE AT LEAST ONE OF EACH PLANT TYPE TAGGED WITH THE GENUS AND SPECIES CLEARLY MARKED. PLANTS OF THE SAME GENUS TYPE WITH DIFFERENT SPECIES TYPE WITH DIFFERENT COLOR OR SPECIES VARIATION MUST HAVE ALL OF EACH DIFFERENT SPECIES CLEARLY TAGGED.
8. ALL PLANT HOLES SHALL BE DUG TO A MINIMUM OF TWO (2) TIMES THE PLANT CONTAINER WIDTH (WIDTH ONLY, NOT DEPTH) AND ALL VERTICAL SIDES IN THE HOLES SHALL BE SHOVEL SCORED. IN NO CASE SHALL SMOOTHLY EXCAVATED SIDES BE ALLOWED FOR PLANTING.
9. PRIOR TO PLANTING OF ANY MATERIALS, COMPACTED SOILS SHALL BE TRANSFORMED INTO A FRIABLE CONDITION. ON ENGINEERED SLOPES, ONLY AMENDED PLANTING HOLES NEED TO MEET THIS REQUIREMENT. "FRIABLE" MEANS A SOIL CONDITION THAT IS EASILY CRUMBLED OR LOOSELY COMPACTED DOWN TO A MINIMUM PLANTING DEPTH PER PLANTING MATERIAL WHEREBY THE ROOT STRUCTURE OR NEWLY PLANTED MATERIAL WILL BE ALLOWED TO SPREAD UNIMPEDED.
10. PREPARE ALL PLANTING AREAS WITH FOUR (4) CUBIC YARDS/1,000 S.F. OF NITROLIZED ORGANIC SOIL CONDITIONER. ROTOTILL EVENLY TO A DEPTH OF SIX (6") INCHES INTO EXISTING SOIL.
11. PROVIDE SOILS FERTILITY TEST, AS PER SPECIFICATIONS, TO LANDSCAPE ARCHITECT PRIOR TO COMMENCING WITH WORK. PREPARE ALL PLANTING AREAS WITH THE MINIMUM OF SOIL CONDITIONER AS STATED IN NOTE #10 ABOVE, OR AS PER RECOMMENDATIONS OF SOILS FERTILITY TEST, WHICHEVER IS GREATER. PROVIDE FERTILIZER PER SOILS FERTILITY REPORT. ROTOTILL EVENLY TO A DEPTH OF SIX (6") INCHES INTO EXISTING SOIL.
12. IF ANY PORTION OF THE SITE IS LIME TREATED, THE LANDSCAPE CONTRACTOR SHALL IMMEDIATELY NOTIFY THE ARCHITECT IN WRITING. DO NOT PROCEED WITH ANY WORK IN LIME TREATED SOIL. TYPICALLY, LIME TREATED SOILS ABOVE 1% RESULT IN PH VALUES AND COMPACTION THAT ARE DELETERIOUS TO PLANT MATERIAL, EVEN WITH AGGRESSIVE AMENDMENTS AND CONDITIONERS. THESE LIME TREATED SOILS MUST BE REMOVED AND REPLACED WITH IMPORT SOILS OF SUITABLE CHEMISTRY AND COMPATIBLE TEXTURE. THE LANDSCAPE CONTRACTOR SHALL NOT PROCEED WITH ANY WORK IN LIME TREATED AREAS UNTIL A RESOLUTION IS PROVIDED IN WRITING.
13. ALL LANDSCAPE BERMS ARE TO BE GRADED SIX (6") INCHES HIGHER THAN THE HIGHEST CONTOUR SHOWN ON PLANS, TYPICAL.
14. ALL LANDSCAPE AREAS WITH A SLOPE OF TWO AND A HALF TO ONE (2-1/2:1) OR GREATER MUST HAVE JUTE NETTING INSTALLED FOR EROSION CONTROL.
15. SHRUB AND GROUND COVER AREAS SHALL BE TREATED WITH CHIPCO RONSTAR 'G' PRE-EMERGENT HERBICIDE. PROVIDE PER MANUFACTURER'S SPECIFICATIONS.

Sunland Analytical
11419 Sunrise Gold Circle, #10
Rancho Cordova, CA 95742
(916) 852-8557

Date Reported 01/30/2026
Date Submitted 01/27/2026

To: Joel DeJong
City Of Roseville
311 Vernon St.
Roseville,CA 95678

From: Gene Oliphant, Ph.D. \
General Manager \

The reported analysis was requested for the following:
Location : PARK SITE JM-51 Site ID : JM-51.
Thank you for your business.

* For future reference to this analysis please use SUN # 97375-198896.

SOIL ANALYSIS

Saturation Percent (SP)	50		Soil Texture Loam
pH	7.00		
E.C.	0.40	mmho/cm	
Tot.Dissolved Salts	256	ppm	
Infiltration Rate (0% Slope)	0.54	in/hr	
% Organic Matter	3.3		
C.E.C.	17.8	meq/100g	
Sodium Absorption Ratio (SAR)	1.4		
Exchangable Sodium Percent (ESP)	0.7		
Gypsum Req. (CaSO4*2H2O)	None Required		
est. Nitrogen Release	1.3	#/1000 sq.ft.	

Nitrate	5.35	ppm	**
Phosphorus	19.80	ppm	**********
Potassium	102.80	ppm	**********
Sulfur	5.90	ppm	********
Chloride	25.59	ppm	**********
Carbonates	80.14	ppm	**********
Sodium	30.51	ppm	
Calcium	2375.12	ppm	**********
Magnesium	674.76	ppm	**********
Boron	0.01	ppm	
Copper	0.34	ppm	***
Iron	9.84	ppm	**********
Manganese	6.06	ppm	**********
Zinc	0.12	ppm	*****

Very Low | Low | Adequate | Excessive

Sunland Analytical
11419 Sunrise Gold Circle, #10
Rancho Cordova, CA 95742
(916) 852-8557

DATE 01/30/2026
SUN NUMBER 198896

Information requested by:
Joel DeJong
City Of Roseville

Information for:
PARK SITE JM-51
Sample ID: JM-51

SOIL RECOMMENDATIONS FOR LANDSCAPE GARDENING

SOIL pH (Acidity and Alkalinity)
The pH of this sample indicates the soil is in a range for normal growth of most plants. No modification is required.

DISSOLVED SALTS (Indicated by E.C. & TDS)
These conditions are in the normal range for plant growth.

SOIL TEXTURE AND RATE OF WATER INFILTRATION
The infiltration rate for all soil textures decreases with increasing ground slope. At 0 to 4%, 5 to 8%, 9 to 12%, 13 to 16% and above 16% the infiltration rate of this sample decreases from 0.54 to 0.43, 0.32, 0.22, 0.14, respectively. Infiltration rate also decreases with percent of ground cover and by compaction.

WATER PENETRATION OF SOIL DUE TO CHEMICAL CHARACTERISTICS
When exchangable Sodium increases in the soil, water penetration decreases. Based on SAR and ESP values this sample has no penetration problem due to soil Sodium. No Gypsum required.

ORGANIC MATTER
Organic matter provides a slow nitrogen release and aids water retention. This sample has a moderate Organic Matter content.
To maintain moisture and provide sustained nitrogen release a level of 10% organic matter is recommended. This can be accomplished by adding 3 yards per 1000 sq.ft. of ground fir bark that is approximately 75% organic matter (i.e. typically found in ground fir bark which also has naturally low salt and boron concentrations). In California, the MWELO ordenance requires a fixed application of four yards of COMPOST if the soil organic matter is less than 6%. However, of significant concern when applying COMPOST is the potential for the compost to have high salt, high boron content, high C to N ratio and having a higly variable pH (very high to very low). All of these COMPOST characteristics can have very negative affect on plant growth. Take care by having the compost analyzed or by seeing a recent analysis of the compost to be used.

Sunland Analytical
11419 Sunrise Gold Circle, #10
Rancho Cordova, CA 95742
(916) 852-8557

PAGE #2

DATE 01/30/2026
SUN NUMBER 198896

Information requested by:
Joel DeJong
City Of Roseville

Information for:
PARK SITE JM-51
Sample ID: JM-51

SOIL RECOMMENDATIONS FOR LANDSCAPE GARDENING

SOIL BORON
Boron concentration is below adequate level. Apply 0.5 (1/2) oz./1000 sq.ft. of boric acid. Dissolve in 2 gallons of water and apply by spraying. Apply carefully because excess boron is toxic to plants !!

SOIL MICRONUTRIENTS
Micronutrients, Copper, Iron, Manganese and Zinc, in soil are present in small amounts. However, they play a necessary role in plant metabolism. Without appropriate amounts plants will not thrive. Apply the following per 1000/ sq.ft. Do not mix micronutrients during application (use a separate application for each element indicated). Apply 10 # of ironite or similar product and water well.
Because copper, manganese and zinc are in very small amounts, dissolve (each) in 2 gallons of water and use a sprayer to obtain an even application.
Apply 0.2 # Copper Sulfate, 0.5 # Zinc Sulfate and water.
SOIL MACRONUTRIENTS : NITROGEN-PHOSPHORUS-POTASSIUM (N-P-K)
GENERAL N-P-K RECOMMENDATION

Use ONE of these NPK preparations for the first fertilizer application.

Standard NPK Fertilizer Preparations	6-24-24	5-20-10	16-16-16	0-10-10	28-3-4	21-0-0	Customer Choice None
#/1000 sq.ft.	17	20	7	N/A	N/A	N/A	**

GRASS OR SOD PREPARATION
Till in organic matter, N,P,K and micro nutrients in addition to any lime gypsum or sulfur as directed above. Smooth soil surface and follow seed or sod producers direction for moisture and product application.

TREES AND SHRUBS
Excavate holes for planting shrubs and trees to at least twice the volume of the container. Prepare backfill for tree and shrub planting holes by mixing three parts of native soil (or imported top soil) with one part organic amendment (preferably nitrogen and iron fortified) and 2.5 pounds of 6-24-24 per yard of mix. For extended fertilization, place slow release fertilizer tablets in each hole per manufacturer's instructions. If 6-24-24 was not directly added to backfill mix, during backfill apply uniformly 1/2 oz of 6-24-24 per gallon containers, 2.5 oz per 5 gallons, 6 oz per 24 inch boxes.

Sunland Analytical
11419 Sunrise Gold Circle, #10
Rancho Cordova, CA 95742
(916) 852-8557

PAGE #3

DATE 01/30/2026
SUN NUMBER 198896

Information requested by:
Joel DeJong
City Of Roseville

Information for:
PARK SITE JM-51
Sample ID: JM-51

SOIL RECOMMENDATIONS FOR LANDSCAPE GARDENING

Summary and Suggested Sequence of Soil Improvements (#/1000 Sq.Ft.)

Organic Amendment	3	Yd./1000 Sq.Ft.	Bulk organic amendment (nitrified). or in Calif. if Org.Mat. less than 6% use 4 yd compost.
N-P-K Fertilizer	See above chart		
Micro Nutrients			
Copper	0.2	#	Copper sulfate
Iron	10	#	Ironite or similar product
Zinc	0.5	#	Zinc Sulfate
Boron	0.5	oz	Boric Acid - excess TOXIC !!!
Sulfate-Sulfur	2	#	Ammonium Sulfate

Maintenance Fertilization
Apply 5 pounds of Ammonium sulfate (21-0-0) per 1000 sq.ft.every month until plants become established. After established, apply 28-3-4 (or similar preparation) to provide desired growth rate and color.

D SOILS ANALYSIS REPORT
NOT TO SCALE

FUHRMAN LEAMY
LAND GROUP
DESIGN • SERVICE • SOLUTIONS
3400 DOUGLAS BLVD., SUITE 275
ROSEVILLE, CALIFORNIA 95661
916.783.5263 • FLLANDGROUP.COM

JOB NO. : CRV: 25026

CITY OF ROSEVILLE APPROVAL

PROJECT:
JM-51PARK

7060 LAKEHAVEN DRIVE
ROSEVILLE, CA

CLIENT:
CITY OF ROSEVILLE

REVISIONS	DATE
△	
△	
△	
△	

ISSUE		DATE
1	1ST SUBMITTAL	9.19.2025
2	2ND SUBMITTAL	10.22.2025
3	3RD SUBMITTAL	12.03.2025
4	4TH SUBMITTAL	2.03.2026
5		

REGISTERED LANDSCAPE ARCHITECT
KEVIN C. LEAMY
No. 4965
Registered
12/31/26
Renewal Date
2.01.2026
Date
STATE OF CALIFORNIA

DRAWN : AM
CHECKED : KCL
SCALE: : 1"=20'-0"

SHEET TITLE:
LANDSCAPE CONSTRUCTION DETAILS

SHEET
LP-2.0
34 OF 40 SHEETS

FUHRMAN LEAMY LAND GROUP HEREBY EXPRESSLY RESERVES ITS COMMON LAW COPYRIGHT AND OTHER PROPERTY RIGHTS IN THESE PLANS. THESE PLANS AND DRAWINGS ARE NOT TO BE REPRODUCED, CHANGED OR COPIED IN ANY FORM OR MANNER WHATSOEVER WITHOUT FIRST OBTAINING THE EXPRESS WRITTEN PERMISSION OF FUHRMAN LEAMY LAND GROUP. NOR ARE THEY TO BE ASSIGNED TO ANY THIRD PARTY WITHOUT FIRST OBTAINING WRITTEN PERMISSION AND CONSENT.

ELECTRICAL ABBREVIATION

ABBREVIATION	DESCRIPTION
A	AMPERES, AMBER
AC	ALTERNATING CURRENT, AIR CONDITIONER
AFC	ABOVE FINISHED CEILING
AFF	ABOVE FINISHED FLOOR
AFG	ABOVE FINISHED GRADE
AIC	AVAILABLE INTERRUPTING CAPACITY
AWG	AMERICAN WIRE GAUGE
BC	BARE COPPER
C	CONDUIT, CLOSE, CONTROL
CB	CIRCUIT BREAKER
CFCI	CONTRACTOR FURNISHED CONTRACTOR INSTALLED
CFOI	CONTRACTOR FURNISHED OWNER INSTALLED
CLG	CEILING
COM	COMMUNICATION
CT	CURRENT TRANSFORMER
CU	COPPER
(D)	DEMOLISH
DN	DOWN
(E)	EXISTING
EF	EXHAUST FAN
ECH	ELECTRIC CONVECTION HEATER
F	FUSE
FACP	FIRE ALARM CONTROL PANEL
FBO	FURNISHED BY OTHERS
G, GND	GROUND
GFCI	GROUND FAULT CIRCUIT INTERRUPTER
GFI	GROUND FAULT INTERRUPTER
GRC	GALVANIZED RIGID STEEL CONDUIT
KVA	KILOVOLT AMPERES
KW	KILOWATT
LED	LIGHT EMITTING DIODE
MDB	MAIN DISTRIBUTION BOARD
MDP	MAIN DISTRIBUTION PANEL
MSB	MAIN SWITCHBOARD
MT, MTD	MOUNT, MOUNTED
MT	EMPTY CONDUIT WITH NYLON PULL CORD
N/A	NOT APPLICABLE
(N)	NEW
N	NEUTRAL
NEC	NATIONAL ELECTRIC CODE
NEMA	NATIONAL ELECTRICAL MANUFACTURERS ASSOCIATION
OFCI	OWNER FURNISHED, CONTRACTOR INSTALLED
OFOI	OWNER FURNISHED, OWNER INSTALLED
OS	OCCUPANCY SENSOR
PH	PHASE
PHP	PACKAGED HEAT PUMP
PNL	PANEL
REF	REFERENCE
REQD	REQUIRED
S	SWITCH
SIM	SIMILAR
TELE	TELEPHONE
TTB	TELEPHONE TERMINAL BOARD
TYP	TYPICAL
UL	UNDERWRITERS LABORATORIES
UON	UNLESS OTHERWISE NOTED
V	VOLTS, VOLTAGE
W/	WITH
W	WIRE, WHITE
WP	WEATHERPROOF
XFMR	TRANSFORMER

ELECTRICAL LEGEND

SYMBOL	DESCRIPTION
	GENERAL
X / X	DETAIL NUMBER AND SHEET LOCATION
	NEW WORK
##	CONDUIT AND WIRE TAG
1	KEYED NOTE
	LIGHTING
	AREA LUMINAIRE ARM MOUNTED WITH POLE AND CONCRETE BASE
	MISCELLANEOUS
#10 B-27,29,31. B-27,29,31.	BRANCH CIRCUIT WIRING. ARROW INDICATES HOME RUN TO PANEL WITH CIRCUITS AS NOTED. WIRE SIZE IS #12 AWG MINIMUM UNLESS NOTED OTHERWISE. SHORT TICK MARKS INDICATE PHASE CONDUCTORS. LONG TICK MARKS INDICATE NEUTRAL CONDUCTORS. A SINGLE CURVED TICK MARK INDICATES INSULATED GREEN GROUND CONDUCTOR. SECOND CURVED TICK MARK INDICATES "ISOLATED GROUND" (GREEN INSULATION WITH YELLOW STRIPE) CONDUCTOR.
	BRANCH PANEL
	CIRCUIT BREAKER
	CURRENT TRANSFORMER
M	DIGITAL TYPE METER WITH VOLTMETER, AMMETER, KW METER, KVA METER, KVAR METER, AND %THD METER
	EQUIPMENT CONNECTION ITEM. REFER TO SCHEDULE
	FLUSH MOUNT EQUIPMENT ENCLOSURE AS NOTED
	FLUSH WALL MOUNTED BRANCH PANEL
	GROUND ROD
	GROUNDING POINT
	LANDING LUG
	MAIN DISTRIBUTION PANEL / SUB DISTRIBUTION PANEL
M	METER WITH CONNECTION
	SURFACE MOUNT EQUIPMENT ENCLOSURE AS NOTED
	RACEWAYS
	CONDUIT CONCEALED IN WALL OR CEILING SPACE
	CONDUIT ROUTED BELOW FLOOR / GRADE
	CONDUIT ELLED DOWN
	CONDUIT ELLED UP
	CONDUIT/WIRING CONTINUATION
	CONDUIT/WIRING STUBBED OUT WITH END CAP OR INSULATED PLASTIC BUSHING

ELECTRICAL LEGEND

SYMBOL	DESCRIPTION
UT	UTILITY TRANSFORMER PAD/VAULT
	WALL MOUNTING BRACKET
	WATER PIPE GROUND CONNECTION
	CONNECTIONS / EQUIPMENT
	HEAVY DUTY FUSED DISCONNECT SWITCH
J OR J	JUNCTION BOX
J	JUNCTION BOX WITH FLEX CONNECTION TO EQUIPMENT
J	WALL-MOUNTED JUNCTION BOX
	NON-FUSED DISCONNECT SWITCH
T	TRANSFORMER
PB	PULL BOX
	ENCLOSED CIRCUIT BREAKER
XX-1 (SEE SCHEDULE)	MOTOR / ELECTRICAL EQUIPMENT

ELECTRICAL GENERAL NOTES

A. ALL WORK SHALL COMPLY WITH ALL LOCAL AND STATE CODES AND AUTHORITIES HAVING JURISDICTION.

B. THE CONTRACTOR SHALL SECURE AND PAY FOR ALL REQUIRED PERMITS AND ARRANGE ALL REQUIRED INSPECTIONS.

C. THE CONTRACTOR SHALL COORDINATE HIS WORK WITH OTHER CONTRACTORS AND TRADES.

D. THESE DRAWINGS, AS PREPARED, ARE DIAGRAMMATIC BUT SHALL BE FOLLOWED AS CLOSELY AS CONSTRUCTION OF THE PROJECT AND THE WORK OF THE TRADES WILL PERMIT. EQUIPMENT LOCATIONS INDICATED ARE APPROXIMATE. COORDINATE EXACT LOCATIONS AND REQUIRED CLEARANCES WITH EQUIPMENT SUPPLIER AND ALL TRADES PRIOR TO INSTALLATION.

E. THE CONTRACTOR SHALL FURNISH AND INSTALL ALL THE EQUIPMENT INDICATED WITHIN THESE DRAWINGS UNLESS OTHERWISE NOTED. VERIFY LOCATION AND DIMENSIONS IN THE FIELD PRIOR TO FABRICATION AND / OR INSTALLATION.

F. THE ENTIRE INSTALLATION SHALL BE GUARANTEED FREE OF DEFECTS AND CONTRACTOR SHALL REPAIR AND / OR REPLACE ANY DEFECTIVE MATERIALS OR EQUIPMENT AT NO COST TO THE OWNER FOR A MINIMUM PERIOD OF ONE YEAR FROM THE DATE OF ACCEPTANCE BY ARCHITECT OR ENGINEER.

G. ALL WORK SHALL BE SUBJECT TO THE ACCEPTANCE AND APPROVAL OF THE ARCHITECT AND OWNER. THE ARCHITECT SHALL BE NOTIFIED OF ANY AND ALL DISCREPANCIES BETWEEN FIELD CONDITIONS AND THE CONTRACT DOCUMENTS BEFORE PROCEEDING WITH THAT PORTION OF THE WORK. FAILURE OF PROPER NOTIFICATION DOES NOT RELIEVE THE CONTRACTOR. THE CONTRACTOR SHALL CORRECT ANY AND ALL WORK ARISING FROM SUCH FAILURE TO COORDINATE DISCREPANCIES TO THE SATISFACTION OF THE ARCHITECT WITHOUT ADDITIONAL COST TO THE OWNER.

H. CONTRACTOR SHALL COORDINATE ALL ELECTRICAL SERVICE REQUIREMENTS WITH ROSEVILLE ELECTRIC.

FOR COUNCIL APPROVAL ONLY

SHEET INDEX

E0.1	ELECTRICAL COVER SHEET
E0.2	ONE-LINE DIAGRAM & ELEVATION, FEEDER SCHEDULE AND LOAD CALCULATIONS
E0.3	TITLE 24 LTO FORMS
E1.0	ELECTRICAL SITE PLAN
E2.0	ELECTRICAL DETAILS
E2.1	ELECTRICAL DETAILS

capital engineering
RANCHO CORDOVA, CALIFORNIA

NH - RK/JC — PM - DESIGN TEAM
250274.00 — PROJECT NO.

FUHRMAN LEAMY LAND GROUP
DESIGN • SERVICE • SOLUTIONS
3400 DOUGLAS BLVD., SUITE 275
ROSEVILLE, CALIFORNIA 95661
916.783.5263 • FLLANDGROUP.COM

JOB NO. : CRV: 25026

CITY OF ROSEVILLE APPROVAL

PROJECT:

JM-51PARK

7060 LAKEHAVEN DRIVE
ROSEVILLE, CA

CLIENT:
CITY OF ROSEVILLE

REVISIONS — DATE

ISSUE — DATE

1	1ST SUBMITTAL	9.19.2025
2	2ND SUBMITTAL	10.22.2025
3	3RD SUBMITTAL	12.03.2025
4		
5		

REGISTERED PROFESSIONAL ENGINEER — JONATHAN A. KEARNEY — No. E 23927 — 3-31-2026 — ELECTRICAL — STATE OF CALIFORNIA

Date Signed: 12/2/2025

DRAWN : JRC
CHECKED : RK
SCALE: : AS SHOWN

SHEET TITLE:
ELECTRICAL COVER SHEET

SHEET
E0.1
35 OF 40 SHEETS

FUHRMAN LEAMY LAND GROUP HEREBY EXPRESSLY RESERVES ITS COMMON LAW COPYRIGHT AND OTHER PROPERTY RIGHTS IN THESE PLANS. THESE PLANS AND DRAWINGS ARE NOT TO BE REPRODUCED, CHANGED OR COPIED IN ANY FORM OR MANNER WHATSOEVER WITHOUT FIRST OBTAINING THE EXPRESS WRITTEN PERMISSION OF FUHRMAN LEAMY LAND GROUP. NOR ARE THEY TO BE ASSIGNED TO ANY THIRD PARTY WITHOUT FIRST OBTAINING WRITTEN PERMISSION AND CONSENT.

POWER CONDUIT & WIRE ROUTING SCHEDULE

ID	CONDUIT NO AND SIZE	CONDUCTORS PER CONDUIT NO AND SIZE	FROM	TO	REMARKS
P0	1 2" PVC	3 #1 PWR	ELECTRIC UTILITY SERVICE CONNECTION POINT	UTILITY SERVICE PEDESTAL	PWR: ROSEVILLE ELECTRIC SECONDARY SERVICE
P1	1 3/4" PVC	1 #6 GND	UTILITY SERVICE PEDESTAL	GROUND ROD BOX	
P2	1 1" PVC	2 #12 PWR 1 #12 GND	UTILITY SERVICE PEDESTAL	UNDERGROUND CONCRETE PULL BOX	PWR: 120VAC, 1 PH
P3	1 1" PVC	2 #12 PWR 1 #12 GND	UNDERGROUND CONCRETE PULL BOX	UNDERGROUND CONCRETE PULL BOX	PWR: 120VAC, 1PH
P4	1 1" PVC	2 #12 PWR 1 #12 GND	UNDERGROUND CONCRETE PULL BOX	LIGHT POLE	PWR: 120VAC, 1PH
P5	1 1" PVC	2 #12 PWR 1 #12 GND	UTILITY SERVICE PEDESTAL	UNDERGROUND CONCRETE PULL BOX	PWR: 120VAC, 1 PH
P6	1 1" PVC	2 #12 PWR 1 #12 GND	UNDERGROUND CONCRETE PULL BOX	IRRIGATION CONTROLLER	PWR: 120VAC, 1 PH
P7	2 1" PVC	PULL CORD	UTILITY SERVICE PEDESTAL	UNDERGROUND CONCRETE PULL BOX	SPARE CONDUITS

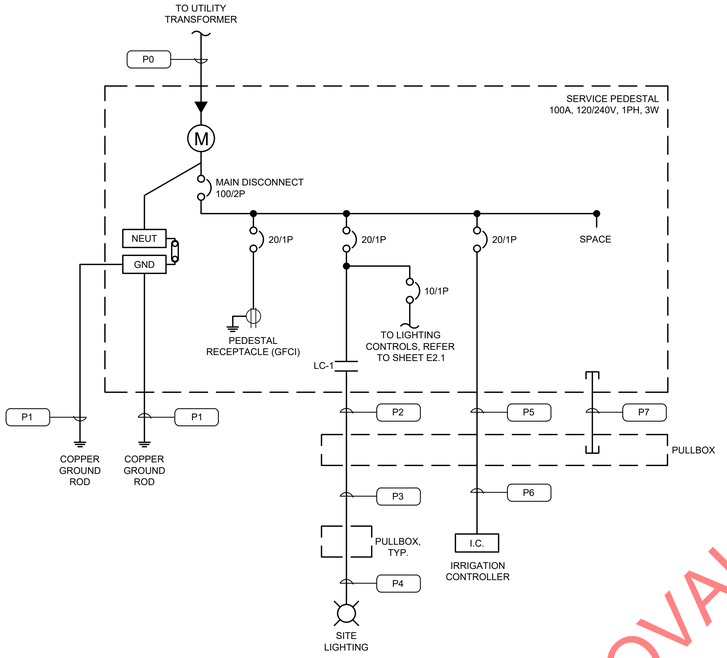

ONE-LINE DIAGRAM

SCALE : NOT TO SCALE

2 / E0.2

UTILITY SERVICE PEDESTAL LOAD CALCULATION

PEDESTAL RECEPTACLE	=	180 VA
SECURITY LIGHT POLE	=	39 VA
IRRIGATION CONTROLLER	=	516 VA
SUB-TOTAL	=	735 VA
+25% CONTINUOUS	=	10 VA
TOTAL	=	745 VA

UTILITY SERVICE:
745 VA/240 VOLTS = 3.1 AMPS
REQUIRED SERVICE = 120/240V, 1Ø, 3W, 100 AMPS

SERVICE PEDESTAL NAMEPLATE SCHEDULE

No.	LETTER SIZE	INSCRIPTION
1	3/16"	MAIN DISCONNECT
2	3/16"	PEDESTAL RECEPTACLE
3	3/16"	SITE LIGHTING/CONTROLS
4	3/16"	IRRIGATION CONTROLLER
5	3/16"	LIGHTING CONTROLS DISCONNECT
6	3/16"	LIGHTING CONTROLS HAND-OFF-AUTO
7	1/4"	SERVICE PEDESTAL

VOLTAGE DROP CALCULATION

CEC 215.2(A)(3) FPN No. 2

3 PHASE FORMULA: $VD=\frac{\sqrt{3}*L*R*A}{1000}$ $\%VD=\frac{VD*100\%}{V}$

1 PHASE FORMULA: $VD=\frac{2*L*R*A}{1000}$ $\%VD=\frac{VD*100\%}{V}$

PANEL - CKT	DISTANCE (FT)	AMPS	VOLTAGE	CONDUCTOR TYPE	PHASE	WIRE SIZE	CONDUIT	IMPEDANCE: OHMS/KFT	VD	%VD
PED. 3	360	2	120	CU	1	#12	PVC	1.700	2.12	1.76%

1. CONDUCTOR IMPEDANCE VALUES BASED ON CEC CHAPTER 9 TABLE 9 - EFFECTIVE IMPEDANCE FOR UNCOATED COPPER WIRES IN PVC OR STEEL CONDUIT @ 0.85 PF (OHM/kFT)

2. PER CEC 210.19(A)(1)FPN NO. 4: BRANCH CIRCUITS ARE ALOWED 3% VOLTAGE DROP AND THE MAXIMUM TOTAL VOLTAGE DROP ON BOTH FEEDERS AND BRANCH CIRCUITS TO THE FARTHEST OUTLET DOES NOT EXCEED 5%

FOR COUNCIL APPROVAL ONLY

SERVICE PEDESTAL CONSTRUCTION NOTES

1. EXTERIOR 12 GA. GALVANIZED STEEL AND INTERIOR 14 GA. COLD ROLLED STEEL ELECTRICALLY WELDED AND REINFORCED WHERE REQUIRED.
2. CONSTRUCTION SHALL BE NEMA 3R AND 12, RAINTIGHT AND DUSTTIGHT.
3. ALL NUTS, BOLTS, SCREWS AND HINGES SHALL BE STAINLESS STEEL.
4. NUTS, BOLTS & SCREWS SHALL NOT BE VISIBLE FROM OUTSIDE OF PEDESTAL.
5. PHENOLIC NAMEPLATES SHALL BE PROVIDED AS REQUIRED.
6. CONTROL WIRING WILL BE MARKED AT BOTH ENDS BY PERMANENT WIRE MARKERS. STICK ON WIRE MARKERS ARE NOT ACCEPTABLE.
7. A PLASTIC COVERED WIRING DIAGRAM WILL BE ATTACHED TO THE INSIDE OF THE FRONT DOOR.
8. PEDESTAL SHALL BE FACTORY WIRED AND CONFORM TO REQUIRED NEMA STANDARDS.
9. PEDESTAL WILL BE U.L. LISTED AS INDUSTRIAL CONTROL PANELS U.L. 508 FILE NO. E62062
10. EXTERIOR COLOR IS TO BE HUNTER GREEN, REMOVABLE INTERIOR SHEET METAL TO BE WHITE.

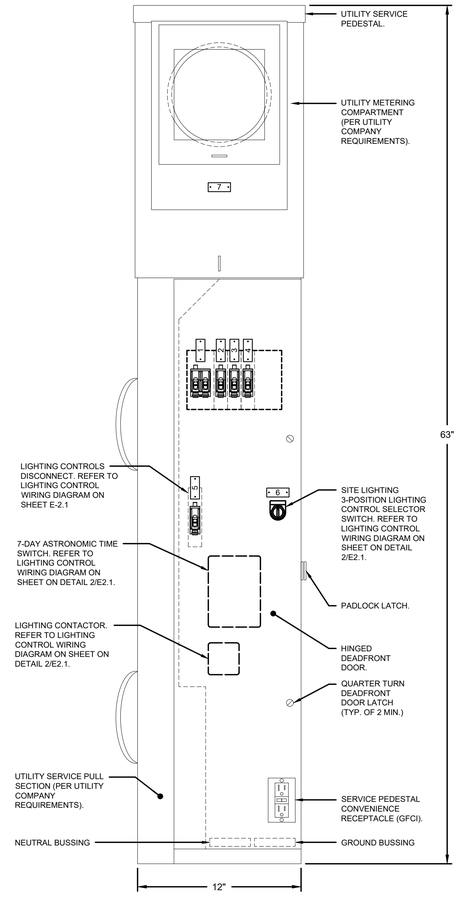

UTILITY SERVICE PEDESTAL - ELEVATION

SCALE : NOT TO SCALE

1 / E0.2

capital engineering
RANCHO CORDOVA, CALIFORNIA

NH - RK/JC — PM - DESIGN TEAM
250274.00 — PROJECT NO.

FUHRMAN LEAMY LAND GROUP
DESIGN • SERVICE • SOLUTIONS
3400 DOUGLAS BLVD., SUITE 275
ROSEVILLE, CALIFORNIA 95661
916.783.5263 • FLLANDGROUP.COM

JOB NO. : CRV: 25026

CITY OF ROSEVILLE APPROVAL

PROJECT:

JM-51PARK

7060 LAKEHAVEN DRIVE
ROSEVILLE, CA

CLIENT:
CITY OF ROSEVILLE

REVISIONS	DATE
△	
△	
△	
△	

ISSUE		DATE
1	1ST SUBMITTAL	9.19.2025
2	2ND SUBMITTAL	10.22.2025
3	3RD SUBMITTAL	12.03.2025
4		
5		

REGISTERED PROFESSIONAL ENGINEER
NATHAN A. HEARN
No. E 23927
3-31-2026
ELECTRICAL
STATE OF CALIFORNIA

Date Signed: 12/2/2025

DRAWN : JRC
CHECKED : RK
SCALE: : AS SHOWN

SHEET TITLE:
ONE-LINE DIAGRAM & ELEVATION, FEEDER SCHEDULE AND LOAD CALCULATIONS

SHEET
E0.2
36 OF 40 SHEETS

FUHRMAN LEAMY LAND GROUP DESIGNS ARE COPYRIGHTED IN ANY FORM OR MANNER WHATSOEVER WITHOUT FIRST OBTAINING THE EXPRESS WRITTEN PERMISSION OF FUHRMAN LEAMY LAND GROUP. NOR ARE THEY TO BE ASSIGNED TO ANY THIRD PARTY WITHOUT FIRST OBTAINING WRITTEN PERMISSION AND CONSENT.
FUHRMAN LEAMY LAND GROUP HEREBY EXPRESSLY RESERVES ITS COMMON LAW COPYRIGHT AND OTHER PROPERTY RIGHTS IN THESE PLANS. THESE PLANS AND DRAWINGS ARE NOT TO BE REPRODUCED, CHANGED OR COPIED IN ANY FORM OR MANNER WHATSOEVER WITHOUT FIRST OBTAINING THE EXPRESS WRITTEN PERMISSION OF FUHRMAN LEAMY LAND GROUP. NOR ARE THEY TO BE ASSIGNED TO ANY THIRD PARTY WITHOUT FIRST OBTAINING WRITTEN PERMISSION AND CONSENT.

STATE OF CALIFORNIA
Outdoor Lighting
CALIFORNIA ENERGY COMMISSION

CERTIFICATE OF COMPLIANCE	NRCC-LTO-E
Project Name: Roseville JM-51 Park	**Report Page:** (Page 1 of 7)
Project Address:	**Date Prepared:** 10/8/2025

This document is used to demonstrate compliance with requirements in 110.9, 130.0, 130.2, 140.7, and 141.0(b)2L for outdoor lighting scopes using the prescriptive path for nonresidential and hotel/motel occupancies. It is also used to document compliance with requirements in 160.5, 170.2(e)6, 180.1(a) and 180.2(b)4Bv for outdoor lighting scopes using the prescriptive path for multifamily and mixed-use occupancies. Multifamily includes dormitory and senior living facilities.

A. GENERAL INFORMATION

01	Project Location (city)	Roseville	04	Total Illuminated Hardscape Area (ft²)	1256
02	Climate Zone	12			
03	Outdoor Lighting Zone per Title 24 Part 1 10.114 or as designated by Authority Having Jurisdiction (AHJ):				
☐	LZ-0: Very Low - Undeveloped Parkland	☒ LZ-2: Moderate - Urban Clusters	☐ LZ-4: High - Must be reviewed by CA Energy Commission for Approval		
☐	LZ-1: Low - Rural Areas	☐ LZ-3: Moderately High - Urban Areas			
05	Occupancy Types within Project				
● All Other Occupancies					

B. PROJECT SCOPE

This table includes outdoor lighting systems that are within the scope of the permit application and are demonstrating compliance using the prescriptive path outlined in 140.7 / 170.2(e)6 or 141.0(b)2L / 180.2(b)4Bv for alterations.

My Project Consists of:

01	02	
☒ New Lighting System	Must Comply with Allowances from 140.7 / 170.2(e)6	
☐ Altered Lighting System	Is your alteration increasing the connected lighting load (Watts)?	○ Yes ○ No
03	04	05
% of Existing Luminaires Being Altered[1]	Sum Total of Luminaires Being Added or Altered	Calculation Method
☐ < 10% ☐ >= 10% and < 50% ☐ >= 50%		

Please proceed to Table F. Outdoor Lighting Fixture Schedule to define the project's luminaires.

[1] *FOOTNOTES: % of Existing Luminaires Being Altered = (Sum Total of Luminaires Being Added or Altered / Existing Luminaires within the Scope of the Permit Application) x 100.*

STATE OF CALIFORNIA
Outdoor Lighting
CALIFORNIA ENERGY COMMISSION

CERTIFICATE OF COMPLIANCE	NRCC-LTO-E
Project Name: Roseville JM-51 Park	**Report Page:** (Page 2 of 7)
	Date Prepared: 10/8/2025

C. COMPLIANCE RESULTS

Results in this table are automatically calculated from data input and calculations in Tables F through N. Note: If any cell on this table says "COMPLIES with Exceptional Conditions" refer to Table D. Exceptional Conditions for guidance or see applicable Table referenced below.

Calculations of Total Allowed Lighting Power (Watts) 140.7 / 170.2(e)6 or 141.0(b)2L / 180.2(b)4Bv										Compliance Results		
01		02		03		04		05	06	07	08	09
General Hardscape Allowance 140.7(d)1 / 170.2(e)6 (See Table I)	+	Per Application 140.7(d)2 / 170.2(e)6 (See Table J)	+	Sales Frontage 140.7(d)2 (See Table K)	+	Ornamental 140.7(d)2 / 170.2(e)6 (See Table L)	+	Per Specific Area 140.7(d)2 / 170.2(e)6 (See Table M)	OR Existing Power Allowance 141.0(b)2L / 180.2(b)4Bv (See Table N)	**Total Allowed** (Watts)	≥	**Total Actual** (Watts)	**07 must be >= 08**
243	+	---	+	---	+	---	+	---	OR ---	243	≥	39	COMPLIES
Shielding Compliance (See Table G for Details)													COMPLIES
Controls Compliance (See Table H for Details)													Not applicable

D. EXCEPTIONAL CONDITIONS

This table is auto-filled with uneditable comments because of selections made or data entered in tables throughout the form.

E. ADDITIONAL REMARKS

This table includes remarks made by the permit applicant to the Authority Having Jurisdiction.

STATE OF CALIFORNIA
Outdoor Lighting
CALIFORNIA ENERGY COMMISSION

CERTIFICATE OF COMPLIANCE	NRCC-LTO-E
Project Name: Roseville JM-51 Park	**Report Page:** (Page 3 of 7)
	Date Prepared: 10/8/2025

F. OUTDOOR LIGHTING FIXTURE SCHEDULE

For new or altered lighting systems demonstrating compliance with 140.7 / 170.2(e)6 all new luminaires being installed and any existing luminaires remaining or being moved within the spaces covered by the permit application are included in the Table below. For altered lighting systems using the Existing Power method per 141.0(b)2L only new luminaires being installed and replacement luminaires being installed as part of the project scope are included (ie, existing luminaires remaining or existing luminaires being moved are not included). Outdoor lighting attached to multifamily buildings and controlled from the inside of a dwelling unit are included in Table H. and are not included here. All other multifamily outdoor lighting is included here.

Designed Wattage:

01	02		03	04	05	06	07	08	09	10	
Name or Item Tag	Complete Luminaire Description		Watts per luminaire[1, 2]	How is Wattage determined	Total Number Luminaires[2]	Luminaire Status[3]	Excluded per 140.7(a) / 170.2(e)6A	Design Watts	Cutoff Req. > 6,200 initial lumen output 130.2(b) / 160.5(c)[4]	Field Inspector	
										Pass	Fail
A	A	☐ Linear	39	Mfr. Spec	1	New	☐	39	Provided	☐	☐
							Total Design Watts:	39			

* NOTES: Selections with a * require a note in the space below explaining how compliance is achieved.
EX: Luminaire is lighting a statue; EXCEPTION 2 to 130.2(b)

[1] *FOOTNOTES: Authority Having Jurisdiction may ask for Luminaire cut sheets to confirm wattage used for compliance per 130.0(c) / 160.5(b)*
[2] *For linear luminaires, wattage should be indicated as W/lf instead of Watts/luminaire. Total linear feet should be indicated in column 05 instead of number of luminaires.*
[3] *Select "New" for new luminaires in a new outdoor lighting project, or for added luminaires in an alteration. Select "Altered" for replacement luminaires in an alteration. Select "Existing to Remain" for existing luminaires within the project scope that are not being altered and are remaining. Select "Existing Reinstalled" for existing luminaires which are being removed and reinstalled as part of the project scope.*
[4] *Compliance with mandatory shielding requirements is required for luminaires with initial lumen output >= 6,200 unless exempted by 130.2(b)/ 160.5(c)*

STATE OF CALIFORNIA
Outdoor Lighting
CALIFORNIA ENERGY COMMISSION

CERTIFICATE OF COMPLIANCE	NRCC-LTO-E
Project Name: Roseville JM-51 Park	**Report Page:** (Page 4 of 7)
	Date Prepared: 10/8/2025

G. SHIELDING REQUIREMENTS (BUG)

This table includes fixtures of >=6,200 initial lumens indicated on Table F as needing to comply with Shielding Requirements. Maximum lumens can be found in Title 24, Part 11, Section 5.106.8.

01	02	03	04	05	06	07	08	09	10	11	12	
		Backlight Rating[2]			Uplight Rating[2]			Glare Rating (Lumens)[2]			Field Inspector	
Name or Item Tag	Complete Luminaire Description	Mounting Height[1]	Max Allowable Backlight Rating[3]	Backlight Rating Per Design	Lighting type	Max Allowable Uplight Rating[3]	Uplight Rating Per Design	Mounting Height[1]	Max Allowable Glare Rating[3]	Glare Rating Per Design	Pass	Fail
A	A	2 MH from property line	No Limit	B3	All other outdoor lighting, including decorative	U2	U4	> 2 MH from property line	G2	G2	☐	☐

[1] *FOOTNOTES: Mounting Height is labeled MH in this table.*
[2] *Authority Having Jurisdiction may ask for Luminaire cut sheets or other documentation to confirm luminaire type, uplight ratings and glare ratings used for compliance per 130.2(b)/ 160.5(c)*
[3] *BUG ratings with a lower number than the 'Max Allowable' are compliant. Ex. if Max Allowable is Bug Rating B4, then B0, B1, B2 and B3 are all compliant.*

H. OUTDOOR LIGHTING CONTROLS

This table demonstrates compliance with controls requirements for all new or altered luminaires installed as part of the permit application. For alteration projects, luminaires which are existing to remain (ie untouched) and luminaires which are removed and reinstalled (wiring only) do not need to be included in this table even if they are within the spaces covered by the permit application.
Outdoor lighting for nonresidential buildings, parking garages and common service areas in multifamily buildings must be documented separately from outdoor lighting attached to multifamily buildings and controlled from the inside of a dwelling unit

Mandatory Controls for Nonresidential Occupancies, Parking Garages & Common Areas in Multifamily Buildings

01	02	03	04	05	
Area Description	Shut-Off 130.2(c)1 / 160.5(c)	Auto-Schedule 130.2(c)2 / 160.5(c)	Motion Sensor 130.2(c)3 / 160.5(c)	Field Inspector	
				Pass	Fail

[1] *FOOTNOTE: Text has been abbreviated, please refer to Table 160.5-A to confirm compliance with the specific light source technologies listed.*
[2] *Authority having jurisdiction may ask for cutsheets or other documentation to confirm compliance of light source.*
[3] *Recessed luminaires marked for use in fire-rated installations, and recessed luminaires installed in non-insulated ceilings are excepted from ii and iii.*

STATE OF CALIFORNIA
Outdoor Lighting
CALIFORNIA ENERGY COMMISSION

CERTIFICATE OF COMPLIANCE	NRCC-LTO-E
Project Name: Roseville JM-51 Park	**Report Page:** (Page 5 of 7)
	Date Prepared: 10/8/2025

I. LIGHTING POWER ALLOWANCE (per 140.7 / 170.2(e))

This table includes areas using allowance calculations per 140.7 / 170.2(e). General Hardscape Allowance is per Table 140.7-A/Table 170.2-R while "Use it or lose it" Allowances are per Table 140.7-B /Table 170.2-S. Indicate which allowances are being used to expand sections for user input. Luminaires that qualify for one of the "Use it or lose it" allowances shall not qualify for another "Use it or lose it" allowance.
Outdoor lighting attached to multifamily buildings and controlled from the inside of a dwelling unit are included in Table H. and are not included here. All other multifamily outdoor lighting is included here.

	01				
	"Use it or lose it" Allowance (select all that apply) (select all that apply)				
☒ General Hardscape Allowance Table I (below)	☐ Per Application Table J	☐ Sales Frontage Table K	☐ Ornamental Table L	☐ Per Specific Area Table M	

Calculated General Hardscape Lighting Power Allowance per Table 140.7-A for Nonresidential & Hotel/Motel

02	03	04	05	06	07	08	09
Area Description	Area Wattage Allowance (AWA)			Linear Wattage Allowance (LWA)			Total General AWA + LWA (Watts)
	Illuminated Area (ft²)	Allowed Density (W/ft²)	Area Allowance (Watts)	Perimeter Length (lf)	Allowed Density (W/lf)	Linear Allowance (Watts)	
Roseville JM-51 Park	1256	0.019	23.9	125	0.2	18.8	43
				Initial Wattage Allowance for Entire Site (Watts):			200
				Instances of Initial Wattage Allowance (LZ 0 only)[1]			
				Total General Hardscape Allowance (Watts):			243

J. LIGHTING ALLOWANCE: PER APPLICATION

This section does not apply to this project.

K. LIGHTING ALLOWANCE: SALES FRONTAGE

This section does not apply to this project.

L. LIGHTING ALLOWANCE: ORNAMENTAL

This section does not apply to this project.

STATE OF CALIFORNIA
Outdoor Lighting
CALIFORNIA ENERGY COMMISSION

CERTIFICATE OF COMPLIANCE	NRCC-LTO-E
Project Name: Roseville JM-51 Park	**Report Page:** (Page 6 of 7)
	Date Prepared: 10/8/2025

M. LIGHTING ALLOWANCE: PER SPECIFIC AREA

This section does not apply to this project.

N. EXISTING CONDITIONS POWER ALLOWANCE (alterations only)

This section does not apply to this project.

O. DECLARATION OF REQUIRED CERTIFICATES OF INSTALLATION

Selections have been made based on information provided in this document. If any selection has been changed by permit applicant, an explanation should be included in Table E. Additional Remarks. These documents must be provided to the building inspector during construction and can be found online

Form/Title
NRCI-LTO-E - Must be submitted for all buildings

P. DECLARATION OF REQUIRED CERTIFICATES OF ACCEPTANCE

There are no NRCA forms required for this project.

STATE OF CALIFORNIA
Outdoor Lighting
CALIFORNIA ENERGY COMMISSION

CERTIFICATE OF COMPLIANCE	NRCC-LTO-E
Project Name: Roseville JM-51 Park	**Report Page:** (Page 7 of 7)
Project Address:	**Date Prepared:** 10/8/2025

DOCUMENTATION AUTHOR'S DECLARATION STATEMENT	
I certify that this Certificate of Compliance documentation is accurate and complete.	
Documentation Author Name: Rustem Kopbayev	Documentation Author Signature: Rustem
Company: Capital Engineering Consultants Inc.	Signature Date: 2025-10-08
Address: 11020 Sun Center Drive Suite 100	CEA/ HERS Certification Identification (if applicable):
City/State/Zip: Rancho Cordova CA 95670	Phone: 916-851-3575

RESPONSIBLE PERSON'S DECLARATION STATEMENT

I certify the following under penalty of perjury, under the laws of the State of California:

1. The information provided on this Certificate of Compliance is true and correct.
2. I am eligible under Division 3 of the Business and Professions Code to accept responsibility for the building design or system design identified on this Certificate of Compliance (responsible designer)
3. The energy features and performance specifications, materials, components, and manufactured devices for the building design or system design identified on this Certificate of Compliance conform to the requirements of Title 24, Part 1 and Part 6 of the California Code of Regulations.
4. The building design features or system design features identified on this Certificate of Compliance are consistent with the information provided on other applicable compliance documents, worksheets, calculations, plans and specifications submitted to the enforcement agency for approval with this building permit application.
5. I will ensure that a completed signed copy of this Certificate of Compliance shall be made available with the building permit(s) issued for the building, and made available to the enforcement agency for all applicable inspections. I understand that a completed signed copy of this Certificate of Compliance is required to be included with the documentation the builder provides to the building owner at occupancy.

Responsible Designer Name: Nathan Hearn	Responsible Designer Signature: Nathan Hearn
Company: Capital Engineering Consultants Inc.	Date Signed: 2025-10-08
Address: 11020 Sun Center Drive, Suite 100	License: E23927
City/State/Zip: Rancho Cordova CA 95670	Phone: 916-851-3568

FOR COUNCIL APPROVAL ONLY

FUHRMAN LEAMY LAND GROUP
DESIGN • SERVICE • SOLUTIONS
3400 DOUGLAS BLVD., SUITE 275
ROSEVILLE, CALIFORNIA 95661
916.783.5263 • FLLANDGROUP.COM

JOB NO. : CRV: 25026

CITY OF ROSEVILLE APPROVAL

PROJECT:
JM-51PARK

7060 LAKEHAVEN DRIVE
ROSEVILLE, CA

CLIENT:
CITY OF ROSEVILLE

REVISIONS	DATE
△	
△	
△	
△	

ISSUE		DATE
1	1ST SUBMITTAL	9.19.2025
2	2ND SUBMITTAL	10.22.2025
3	3RD SUBMITTAL	12.03.2025
4		
5		

REGISTERED PROFESSIONAL ENGINEER
NATHAN A. HEARN
No. E 23927
3-31-2026
ELECTRICAL
STATE OF CALIFORNIA
Date Signed: 12/2/2025

DRAWN : JRC
CHECKED : RK
SCALE: : AS SHOWN

SHEET TITLE:
TITLE 24
LTO FORMS

capital engineering
RANCHO CORDOVA, CALIFORNIA
NH - RK/JC 250274.00
PM - DESIGN TEAM PROJECT NO.

SHEET
E0.3
37 OF 40 SHEETS

FUHRMAN LEAMY LAND GROUP HEREBY EXPRESSLY RESERVES ITS COMMON LAW COPYRIGHT AND OTHER PROPERTY RIGHTS IN THESE PLANS. THESE PLANS AND DRAWINGS ARE NOT TO BE REPRODUCED, CHANGED OR COPIED IN ANY FORM OR MANNER WHATSOEVER WITHOUT FIRST OBTAINING THE EXPRESS WRITTEN PERMISSION OF FUHRMAN LEAMY LAND GROUP. NOR ARE THEY TO BE ASSIGNED TO ANY THIRD PARTY WITHOUT FIRST OBTAINING WRITTEN PERMISSION AND CONSENT.

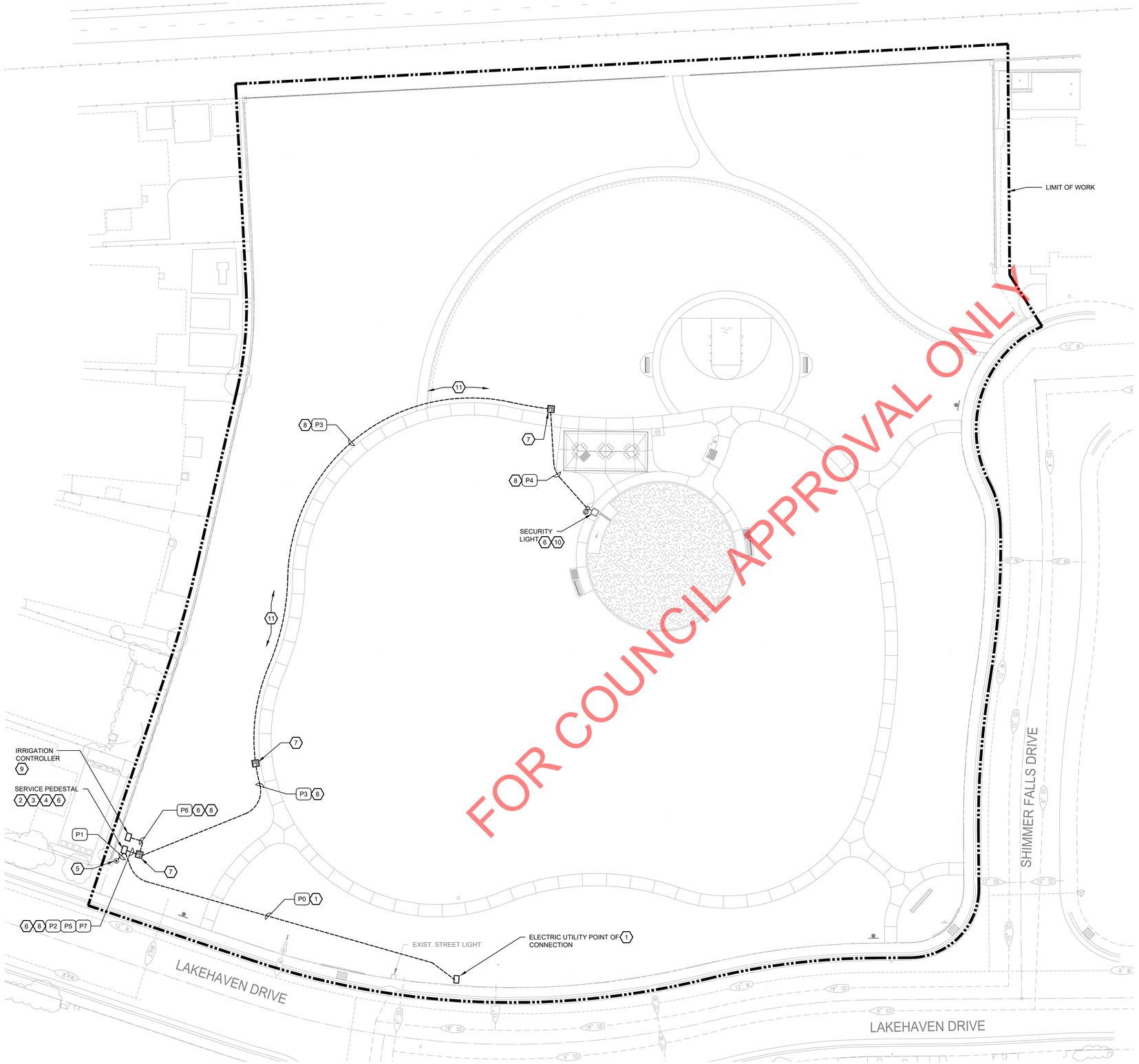

FOR COUNCIL APPROVAL ONLY

ELECTRICAL SITE PLAN 1 / E1.0

SCALE : 1" = 20'-0"

N

KEY NOTES:

1. UNDERGROUND ELECTRICAL UTILITY SERVICE CONDUIT, COORDINATE SERVICE, TRENCH REQUIREMENTS AND ROUTING WITH ELECTRICAL UTILITY COMPANY PRIOR TO INSTALLATION. REFER TO DRY UTILITIES DRAWING FOR ADDITIONAL INFORMATION. FOR INSTALLATION SEE TYPICAL SECONDARY SERVICE TRENCH DETAIL 4, SHT. E2.0.
2. UTILITY SERVICE PEDESTAL. FOR LAYOUT SEE ELEVATION ON SHEET E0.2. FOR CONNECTIONS SEE ONE-LINE DIAGRAM ON SHEET E0.2.
3. UTILITY SERVICE PEDESTAL CONCRETE PAD, FOR INSTALLATION SEE SERVICE PEDESTAL CONCRETE PAD DETAIL 8 ON SHEET E2.0.
4. UTILITY SERVICE PEDESTAL MOUNTING, FOR INSTALLATION SEE UTILITY SERVICE PEDESTAL MOUNTING DETAIL 7, SHT. E2.0.
5. UNDERGROUND CONCRETE GROUND ROD BOX, FOR INSTALLATION SEE TYPICAL CONCRETE GROUND ROD BOX DETAIL 3, SHT. E2.0.
6. CONDUIT STUB-UP. FOR INSTALLATION, SEE CONDUIT STUB-UP DETAIL 2, SHT. E2.0.
7. UNDERGROUND CONCRETE PULLBOX, FOR INSTALLATION SEE TYPICAL CONCRETE PULLBOX DETAIL 1, SHT. E2.0.
8. UNDERGROUND CONDUIT. FOR INSTALLATION SEE TYPICAL TRENCH DETAIL 5, SHT. E2.0.
9. IRRIGATION CONTROLLER. COORDINATE EXACT LOCATION AND CONNECTION REQUIREMENTS WITH LANDSCAPE CONTRACTOR. INSTALL AND CONNECT 5/8" x 8' GROUND ROD WITH #6 CU CONDUCTOR AT FOUNDATION PER MANUFACTURERS REQUIREMENTS. FOR INSTALLATION SEE IRRIGATION CONTROLLER DETAIL 6, SHT. E2.0.
10. CITY OF ROSEVILLE STANDARD AREA LIGHT POLE. FOR DESCRIPTION SEE LIGHTING FIXTURE SCHEDULE SHT. E2.1. FOR LIGHT POLE INSTALLATION SEE TYPICAL POLE MOUNTED AREA LIGHT DETAIL 1, SHT. E2.1.
11. FOR UNDERGROUND WORK MAINTAIN REQUIRED CLEARANCES AROUND TREES PER CITY STANDARDS. REFER TO LANDSCAPE DRAWINGS FOR TREES.

FUHRMAN LEAMY
LAND GROUP
DESIGN • SERVICE • SOLUTIONS

3400 DOUGLAS BLVD., SUITE 275
ROSEVILLE, CALIFORNIA 95661
916.783.5263 • FLLANDGROUP.COM

JOB NO. : CRV: 25026

CITY OF ROSEVILLE APPROVAL

PROJECT:

JM-51PARK

7060 LAKEHAVEN DRIVE
ROSEVILLE, CA

CLIENT:
CITY OF ROSEVILLE

REVISIONS	DATE
1	
2	
3	
4	

ISSUE		DATE
1	1ST SUBMITTAL	9.19.2025
2	2ND SUBMITTAL	10.22.2025
3	3RD SUBMITTAL	12.03.2025
4		
5		

REGISTERED PROFESSIONAL ENGINEER
JONATHAN A. HEARN
No. E 23927
3-31-2026
ELECTRICAL
STATE OF CALIFORNIA

Date Signed: 12/2/2025

DRAWN :	JRC
CHECKED :	RK
SCALE: :	AS SHOWN

SHEET TITLE:
ELECTRICAL
SITE PLAN

capital engineering
RANCHO CORDOVA, CALIFORNIA

NH - RK/JC 250274.00
PM - DESIGN TEAM PROJECT NO.

SHEET
E1.0
38 OF 40 SHEETS

FUHRMAN LEAMY LAND GROUP (FLLG) RESERVES ITS COMMON LAW COPYRIGHT AND OTHER PROPERTY RIGHTS IN THESE PLANS. THESE PLANS AND DRAWINGS ARE NOT TO BE REPRODUCED, CHANGED OR COPIED IN ANY FORM OR MANNER WHATSOEVER WITHOUT FIRST OBTAINING THE EXPRESS WRITTEN PERMISSION OF FUHRMAN LEAMY LAND GROUP. NOR ARE THEY TO BE ASSIGNED TO ANY THIRD PARTY WITHOUT FIRST OBTAINING WRITTEN PERMISSION AND CONSENT.

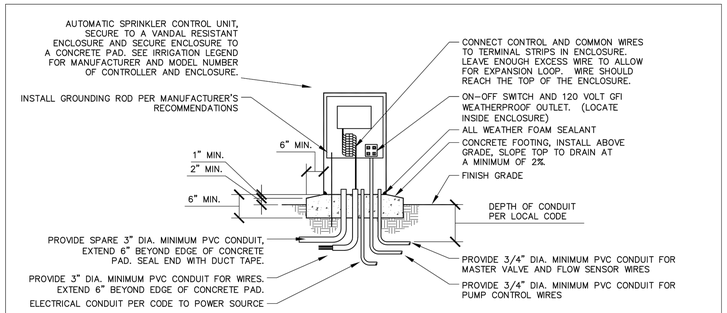

NOTES

1. COMMON WIRE TO BE WHITE & CONTROL WIRE TO BE RED IN COLOR. BUNDLE AND TAPE AT INTERVALS OF 10 FT. O. C.
2. NO SPLICES SHALL BE MADE BETWEEN CONTROLLER AND REMOTE CONTROL VALVES UNDER 500 LINEAL FEET.
3. ORDER WITH MANUFACTURER'S FACTORY FINISH STAINLESS STEEL.
4. INSULATE AROUND INSIDE BASE OF BOX WITH ALL WEATHER FOAM SEALANT.
5. GROUNDING ROD SHALL BE INSTALLED PER MANUFACTURER'S RECOMMENDATIONS..
6. GROUND TEST TO BE CONDUCTED AFTER INSTALLATION, NOT TO EXCEED 25 OHMS.
7. MASTER VALVE WIRE SHALL BE BLUE.
8. PROVIDE COLOR CODED MAP OF VALVE LOCATIONS.
9. EXTEND PAWING 24" AT FRONT OF CONTROLLER TO ALLOW FOR CLEAR ACCESS.

Jill Geller

JILL GELLER, CPRE
PARKS, RECREATION & LIBRARIES DIRECTOR

CITY OF ROSEVILLE CALIFORNIA — PARKS, RECREATION, & LIBRARIES DEPARTMENT

CONTROLLER

SCALE: NONE
REVISED: JULY 2025
REVIEWED BY: T. GEE
APPROVED BY: J. GELLER

PK-IR-1

IRRIGATION CONTROLLER DETAIL

SCALE : NO SCALE

6 / E2.0

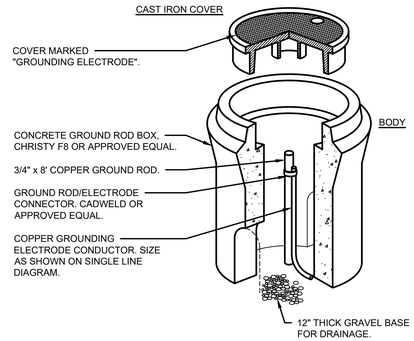

TYPICAL CONCRETE GROUND ROD BOX DETAIL

SCALE : NO SCALE

3 / E2.0

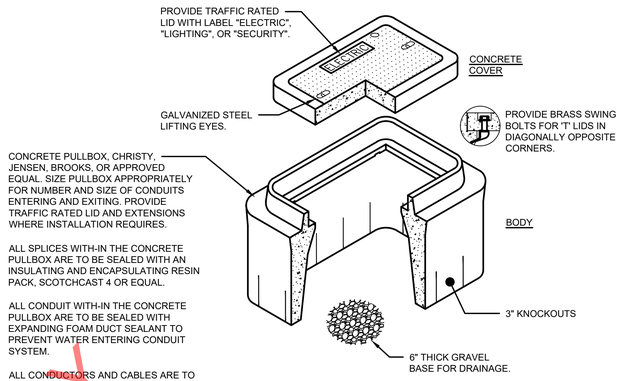

TYPICAL CONCRETE PULLBOX DETAIL

SCALE : NO SCALE

1 / E2.0

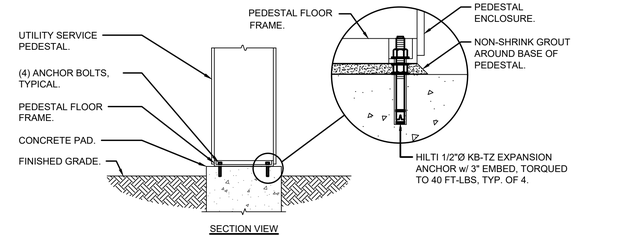

UTILITY SERVICE PEDESTAL MOUNTING DETAIL

SCALE : NO SCALE

7 / E2.0

TYPICAL SECONDARY SERVICE TRENCH DETAIL

SCALE : NO SCALE

4 / E2.0

NOTES:
COORDINATE COUPLING LOCATION TO MATCH LOCATION OF FUTURE EQUIPMENT WHERE REQUIRED.

CONDUIT STUB-UP DETAIL

SCALE : NO SCALE

2 / E2.0

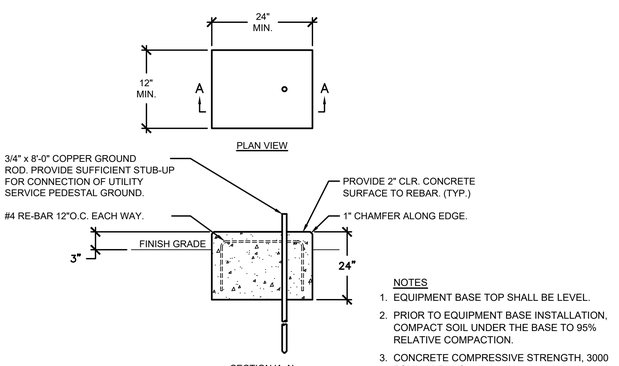

NOTES

1. EQUIPMENT BASE TOP SHALL BE LEVEL.
2. PRIOR TO EQUIPMENT BASE INSTALLATION, COMPACT SOIL UNDER THE BASE TO 95% RELATIVE COMPACTION.
3. CONCRETE COMPRESSIVE STRENGTH, 3000 PSI IN 28 DAYS.

UTILITY SERVICE PEDESTAL CONCRETE PAD DETAIL

SCALE : NO SCALE

8 / E2.0

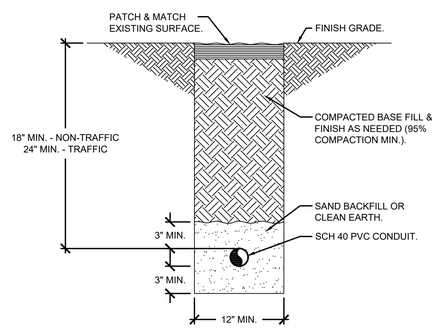

TYPICAL TRENCH DETAIL

SCALE : NO SCALE

5 / E2.0

FOR COUNCIL APPROVAL ONLY

FUHRMAN LEAMY LAND GROUP
DESIGN • SERVICE • SOLUTIONS
3400 DOUGLAS BLVD., SUITE 275
ROSEVILLE, CALIFORNIA 95661
916.783.5263 • FLLANDGROUP.COM

JOB NO. : CRV: 25026

CITY OF ROSEVILLE APPROVAL

PROJECT:

JM-51PARK

7060 LAKEHAVEN DRIVE
ROSEVILLE, CA

CLIENT:
CITY OF ROSEVILLE

REVISIONS	DATE
1	
2	
3	
4	

ISSUE		DATE
1	1ST SUBMITTAL	9.19.2025
2	2ND SUBMITTAL	10.22.2025
3	3RD SUBMITTAL	12.03.2025
4		
5		

REGISTERED PROFESSIONAL ENGINEER — NATHAN A. HEARN — No. E 23927 — 3-31-2026 — ELECTRICAL — STATE OF CALIFORNIA

Date Signed: 12/2/2025

DRAWN :	JRC
CHECKED :	RK
SCALE: :	AS SHOWN

SHEET TITLE:
ELECTRICAL DETAILS

capital engineering
RANCHO CORDOVA, CALIFORNIA

NH - RK/JC 250274.00
PM - DESIGN TEAM PROJECT NO.

SHEET
E2.0
39 OF 40 SHEETS

FUHRMAN LEAMY LAND GROUP HEREBY EXPRESSLY RESERVES ITS COMMON LAW COPYRIGHT AND OTHER PROPERTY RIGHTS IN THESE PLANS. THESE PLANS AND DRAWINGS ARE NOT TO BE REPRODUCED, CHANGED OR COPIED IN ANY FORM OR MANNER WHATSOEVER WITHOUT FIRST OBTAINING THE EXPRESS WRITTEN PERMISSION OF FUHRMAN LEAMY LAND GROUP. NOR ARE THEY TO BE ASSIGNED TO ANY THIRD PARTY WITHOUT FIRST OBTAINING WRITTEN PERMISSION AND CONSENT.

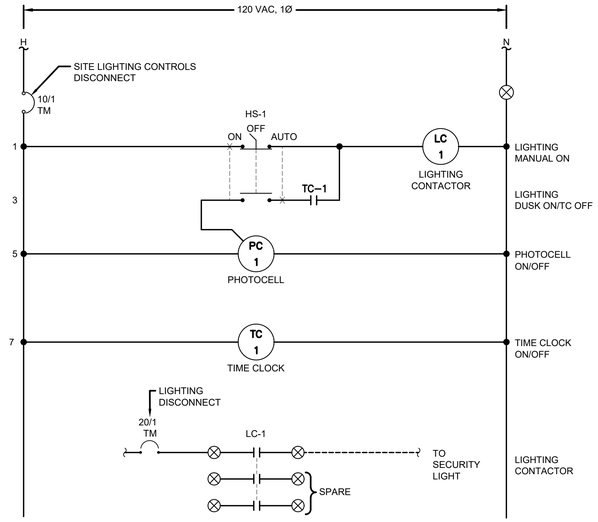

LCC EQUIPMENT LIST		
TAG	EQUIPMENT	MANUFACTURER/MODEL
PC-1	PHOTOCELL	INTERMATIC / K 4136M OR EQUAL
TC-1	TIMECLOCK	TORK / DWZ100B OR EQUAL
HS-1	SELECTOR SWITCH (3-POSITION)	SQUARE D / CLASS 9001K OR EQUAL
LC-1	LIGHTING CONTACTOR (3-POLE, 30 AMP)	SQUARE D / CLASS 8903, TYPE L OR EQUAL
CB-1	MINATURE CIRCUIT BREAKER (10 AMP, 120 VAC)	SQUARE D / QOB OR EQUAL

LIGHTING CONTROLS WIRING DIAGRAM

2 / E2.1

SCALE : NO SCALE

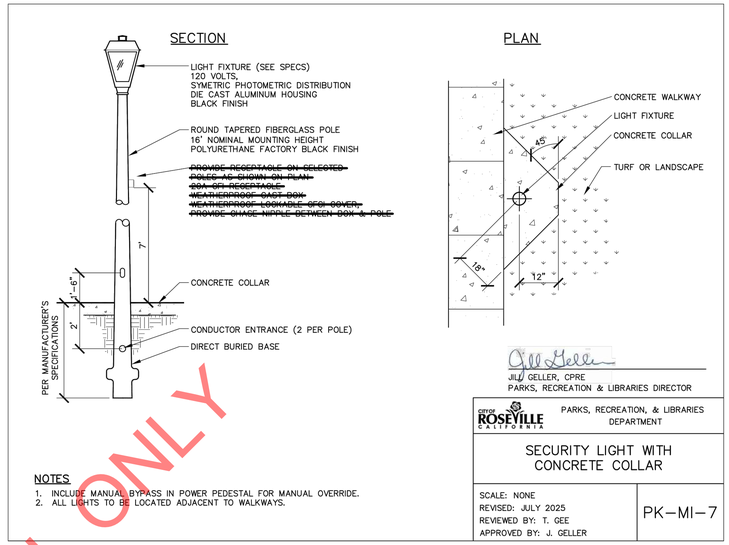

NOTES

1. INCLUDE MANUAL BYPASS IN POWER PEDESTAL FOR MANUAL OVERRIDE.
2. ALL LIGHTS TO BE LOCATED ADJACENT TO WALKWAYS.

JILL GELLER, CPRE
PARKS, RECREATION & LIBRARIES DIRECTOR

CITY OF ROSEVILLE CALIFORNIA — PARKS, RECREATION, & LIBRARIES DEPARTMENT

SECURITY LIGHT WITH CONCRETE COLLAR

SCALE: NONE
REVISED: JULY 2025
REVIEWED BY: T. GEE
APPROVED BY: J. GELLER

PK–MI–7

TYPICAL POLE MOUNTED AREA LIGHT DETAIL

1 / E2.1

SCALE : NO SCALE

LIGHTING FIXTURE SCHEDULE

TAG	DESCRIPTION	MANUFACTURER	LAMPS	WATTS	COLOR	MOUNTING	NOTES
A	POST TOP REFRACTIVE GLOBE	HADCO RL54 B B N N 1 A W N N N A 2 N N N N SP1	LED	39	BLACK	POLE	1

NOTES:

1 POLE: WHATLEY #TR34 16 DE BLK TXT 30 (DIRECT BURIAL)

GENERAL NOTES:

A. THIS LIGHTING SCHEDULE IS NOT COMPLETE WITHOUT A COPY OF THE PROJECT MANUAL CONTAINING ELECTRICAL SPECIFICATIONS.

B. SPECIFIED MANUFACTURERS ARE APPROVED TO SUBMIT BID. INCLUSION DOES NOT RELIEVE MANUFACTURER FROM SUPPLYING PRODUCT AS DESCRIBED.

C. PROVIDE SUBMITTALS THAT INCLUDE LIGHTING FIXTURE, LED, AND DRIVER INFORMATION FOR EACH FIXTURE, WITH APPLICABLE OPTIONS CLEARLY CHECKED OR HIGHLIGHTED. SUBMITTALS NOT INCLUDING THIS INFORMATION WILL BE RETURNED AS REJECTED BY THE ENGINEER OF RECORD.

D. PROVIDE COMMISSIONING OF THE LIGHTING AND LIGHTING CONTROLS IN ACCORDANCE WITH CALIFORNIA TITLE 24 COMMISSIONING REQUIREMENTS.

FOR COUNCIL APPROVAL ONLY

capital engineering
RANCHO CORDOVA, CALIFORNIA

NH - RK/JC — PM - DESIGN TEAM
250274.00 — PROJECT NO.

FUHRMAN LEAMY LAND GROUP
DESIGN • SERVICE • SOLUTIONS
3400 DOUGLAS BLVD., SUITE 275
ROSEVILLE, CALIFORNIA 95661
916.783.5263 • FLLANDGROUP.COM

JOB NO. : CRV: 25026

CITY OF ROSEVILLE APPROVAL

PROJECT:

JM-51PARK

7060 LAKEHAVEN DRIVE
ROSEVILLE, CA

CLIENT:
CITY OF ROSEVILLE

REVISIONS	DATE
△	
△	
△	
△	

ISSUE		DATE
1	1ST SUBMITTAL	9.19.2025
2	2ND SUBMITTAL	10.22.2025
3	3RD SUBMITTAL	12.03.2025
4		
5		

REGISTERED PROFESSIONAL ENGINEER
NATHAN A. HEARN
No. E 23927
3-31-2026
ELECTRICAL
STATE OF CALIFORNIA

Date Signed: 12/2/2025

DRAWN : JRC
CHECKED : RK
SCALE: : AS SHOWN

SHEET TITLE:
ELECTRICAL DETAILS

SHEET
E2.1
40 OF 40 SHEETS

City Council Communication

Meeting Date: 3/4/2026
Item #: VII.15
File #: 0704-01-01
Item ID: 2026-122

Title:	JM-52 Park Project - Approval of Plans and Specifications and Authorize Staff to Call for Bids
Contact:	Josh Cervantes 916-746-1233 jrcervantes@roseville.ca.us

SUMMARY

Staff recommends City Council approval of plans and specifications for the JM-52 Park Project and authorize staff to call for bids. The project scope includes a playground, paved and natural walking paths, picnic area and seating, turf area, planting and irrigation. The project is estimated to cost $475,000 for the base bid and will be funded by the JM-52 Neighborhood Park project budget in the Sierra Vista Neighborhood Park Fund.

RECOMMENDATION

Staff recommends that the City Council approve the plans and specifications for the JM-52 Park Project and authorize staff to call for bids.

BACKGROUND

JM-52 Park is a 1.5-acre neighborhood park located at Bright Star Rd. and Misty Ridge Dr. in Sierra Vista. This park backs up to an open space area. The master plan for this park was approved by the City Council on May 21, 2025. Amenities planned for the park include a playground, paved and natural walking paths, picnic area and seating, turf area, planting and irrigation. Additive alternates have been identified for budget purposes to allow for “menu style” bidding, and include a shade structure, additional turf and irrigation, sod in lieu of seeded turf, and additional concrete pathways. Bids are scheduled to be opened later in March 2026. Staff plans to return to Council in May to seek approval to award the project.

The architect’s estimate for construction for the base bid is $475,000.

FISCAL IMPACT

Funding for construction of this park was included in the FY2025-26 capital improvement project (CIP) budget in the JM-52 Neighborhood Park project in the Neighborhood Park - Sierra Vista Fund. Maintenance costs will be approximately $16,000/acre/year and will be funded by the Sierra Vista Community Facilities District No. 2 (Public Services). There will be no General Fund impact.

ENVIRONMENTAL REVIEW

Development of the JM-52 Neighborhood Park master plan was previously evaluated in the Sierra Vista Specific Plan Environmental impact Report (EIR) (certified May 5, 2010, SCH No. 2008032115) and identified in the associated Sierra Vista Specific Plan (SVSP). As proposed, construction of the JM-52 Park is within the scope of the project covered by the SVSP Final EIR. As discussed in the Specific Plan EIR, the EIR provides environmental analyses of community infrastructure and facilities, including parks, pedestrian bridges, and bike trails, to the extent applicable. Because the project is consistent with the SVSP Final EIR and Specific Plan, no new effects would be expected to occur and all applicable mitigation

measures from the SVSP EIR will be implemented during the design and construction of the JM-51 Park. The proposed project meets the requirements identified in Section 15183 of the State CEQA Guidelines, therefore, no additional CEQA review is required.

CITY COUNCIL STRATEGIC PLAN/OVERARCHING GOALS

1. Ensure a safe and healthy community
4. Invest in well-planned infrastructure and growth
5. Support community engagement and advocacy
6. Deliver exceptional City services

Respectfully Submitted,
Josh Cervantes, Park Development Project Manager

Jill Geller, Parks Recreation and Libraries Director

ATTACHMENTS:

1. Vicinity Map
2. Project Manual
3. Plans

REVIEWERS:

Josh Cervantes, Parks, Recreation, and Libraries Department - Park Development	Created/Initiated - 2/10/2026
Tara Gee, Parks, Recreation, and Libraries Department - Park Development	Approved - 2/11/2026
Jill Geller, Parks, Recreation, and Libraries - All	Approved - 2/13/2026
Kelly Aye, City Attorney Department	Approved - 2/17/2026
Katrina Six, City Clerk Department	Approved - 2/17/2026
Ryan DeVore, City Manager Department - Assistant City Manager	Approved - 2/17/2026
Dennis Kauffman, City Manager Department - Assistant City Manager	Approved - 2/18/2026
Michelle Sheidenberger, City Attorney Department	Approved - 2/18/2026
Dominick Casey, City Manager Department - City Manager	Approved - 2/18/2026
Katrina Six, City Clerk Department	Final Approval - 2/19/2026

JM-52 Park

Vicinity Map

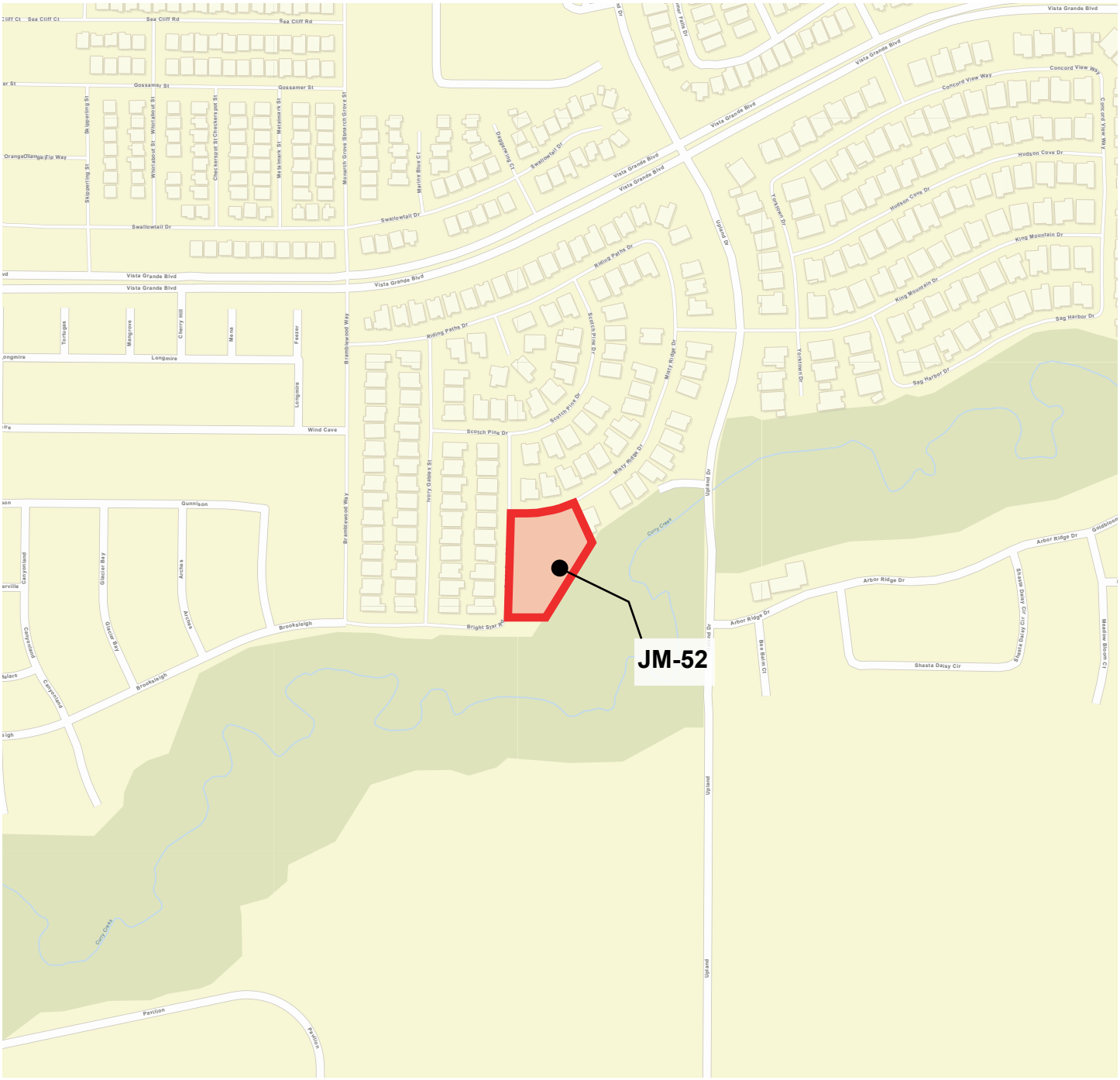

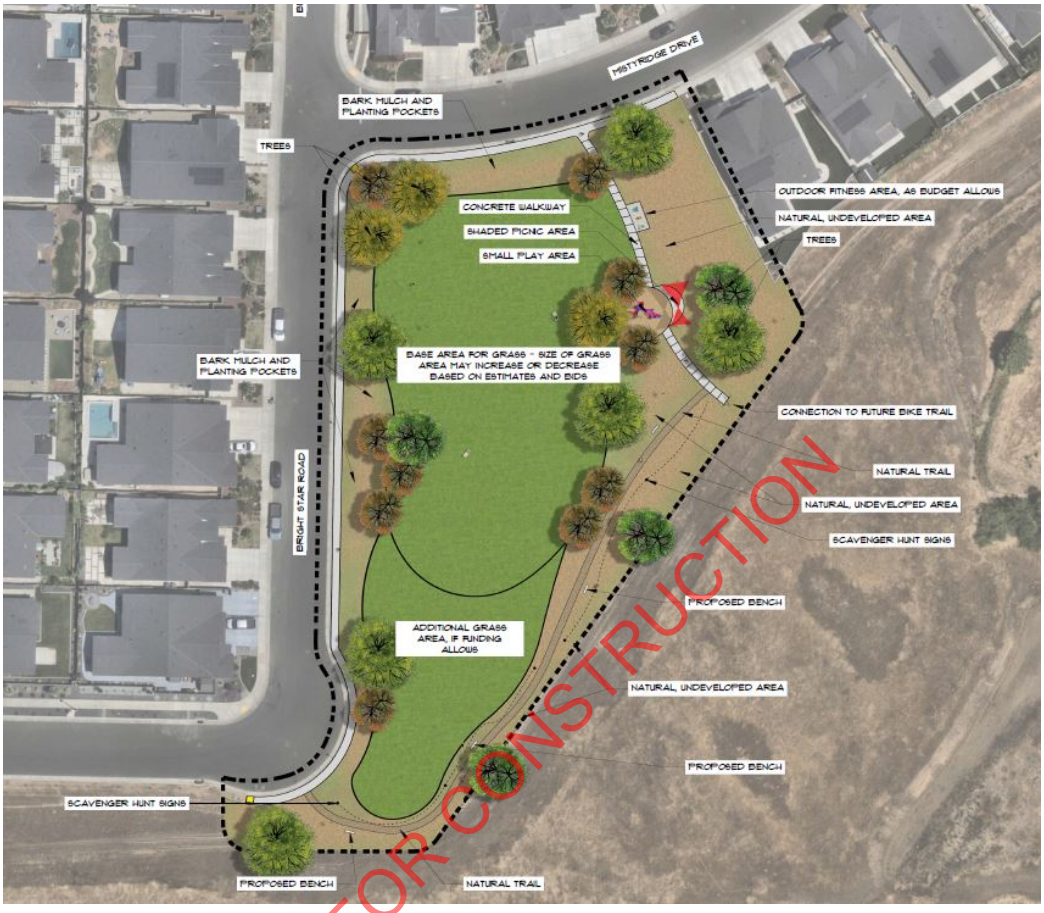

FOR COUNCIL ONLY NOT FOR CONSTRUCTION

Project Manual for the

JM-52 Park Project

March 2026

The latest edition of the City of Roseville Parks Construction Standards are incorporated by reference as a part of this Project Manual. The Parks Construction Standards can be purchased at the address listed below.

Parks, Recreation & Libraries
316 Vernon Street, Suite 400
Roseville, California 95678
www.roseville.ca.us

CITY OF ROSEVILLE CALIFORNIA

Parks, Recreation & Libraries
Park Development
316 Vernon Street, Suite 400
Roseville, California 95678

Notice to Bidders

DATE: March 5, 2026

TO: Prospective Bidders

FROM: Joshua Cervantes, Park Development Project Manager

RE: JM-52 Park Project

Project Description: The City of Roseville is now accepting bid proposals for the JM-52 Park Project from **pre-qualified** Prime Contractors. The scope of work for the base bid includes, but is not limited to, grading and utilities, a playground, seated picnic area, walking paths, turf area, planting and irrigation. Additive alternates include furnishing and installation of a shade structure, additional turf and irrigation, sod in lieu of seeded turf, and additional concrete pathways.

Prime Contractors: At this time, this project is only available for bidding by Prime Contractors listed on the City of Roseville Parks, Recreation and Libraries 2026 Pre-Qualified Contractor List. Please see attached Pre-Qualified Prime Contractors memo for more information.

Subcontractors: The City reserves the right to conduct a post-bid qualifications review of any subcontractors if deemed necessary.

Contract Documents: A Project Manual, including all Contract Documents and the Proposal forms for bidding this project, may be obtained online from the City of Roseville's website at www.roseville.ca.us/business/procurement_services/bids_rfps. Potential bidders are advised to obtain all documents and specifications related to this project directly from the City of Roseville / Public Purchase. The City of Roseville does not guarantee the accuracy of any forms, plans, or project manuals obtained through outside sources other than the City of Roseville. Furthermore, the City does not guarantee the distribution of any addendums or the accuracy of their content if obtained from a third party.

Engineer's Estimate: The engineer's estimate for construction of the base bid items is $475,000.

Questions: The deadline for submission of questions and clarifications regarding the Contract Documents is Tuesday, March 17, 2026 at 5:00 p.m. In order to meet the required timeline to issue addenda, questions will not be accepted after this date. Only Addenda issued by the City are binding. All questions shall be directed to the attention of Joshua Cervantes either via e-mail at JRCervantes@roseville.ca.us, or Public Purchase at https://roseville.ca.us/rfp.

Pre-Bid Conference: There is NO pre-bid conference for this project.

Bid Deadline: Proposals will be received at the Office of the City Clerk, 311 Vernon Street, Roseville, California, until 3:00 p.m. on Tuesday, March 24, 2026. The proposals will be publicly opened and read by the City Clerk or designee of the City of Roseville in the City Clerk's Office at 3:05 p.m. on that same day.

The July 2025 edition of the City of Roseville Parks Construction Standards will be applicable to this project. The successful bidder will be required to use the standards contained in the book for the construction of this project.

FOR COUNCIL ONLY NOT FOR CONSTRUCTION

Parks, Recreation & Libraries
Park Development
316 Vernon Street, Suite 400
Roseville CA 95678

To the successful bidder:

In order to move forward with the award of this project, the City of Roseville requests that you submit the following documents:

1. Please return two, original signed agreements OR a PDF of original signatures if unable to get originals. Corporations require two corporate signatures –OR- one corporate signature and a corporate seal. For a listing of accepted signatures, please see below *.

   * In accordance with Section 313 of the California Corporations Code, any document executed by a corporation requires the signature from at least one person from EACH of the following two groups:

GROUP ONE	GROUP TWO
Chairman of the Board	Secretary
President	Assistant Secretary
Vice President	Chief Financial Officer
	Assistant Treasurer

   If an officer holds a title in each of the above groups (dual title), that officer may sign for each of the two groups by two separate signatures with the appropriate title listed with his or her signature.

   There are also two exceptions whereby we would accept only one signature:
   - One corporate signature AND a corporate seal
     -OR-
   - They are able to provide a current resolution from their Board of Directors, stating that a particular person has the sole authority to bind the corporation.

2. Public Works Faithful Performance Bond – fully executed and notarized.

3. Public Works Labor and Materials Payment Bond – fully executed and notarized.

4. Insurance - fully executed and notarized.

We request that all documents be received by April 3, 2026.

The Parks, Recreation & Libraries Department requires submittal of all of the above executed documents prior to City Council bid award.

FOR COUNCIL ONLY NOT FOR CONSTRUCTION

916.774.5505 phone
916.774.5251 fax
www.roseville.ca.us

TABLE OF CONTENTS

	Pagination Notation
Notice to Contractors	NTC
Instructions to Bidders	INT
Proposal	PROP
Insurance Broker Information Packet	INS
General Conditions for Buildings and Grounds	GC
Supplemental Conditions	SC
Specifications	SPEC
Drawings	DRAW
Assembly Bill No. 626	AB 626

FOR COUNCIL ONLY NOT FOR CONSTRUCTION

CITY OF ROSEVILLE

DEPARTMENT OF Parks, Recreation & Libraries

Name of Project: JM-52 Park Project

NOTICE TO CONTRACTORS

FOR COUNCIL ONLY NOT FOR CONSTRUCTION

NOTICE IS HEREBY GIVEN THAT sealed Proposals will be received at the Office of the City Clerk, 311 Vernon Street, Roseville, California, until March 24, 2026 at 3:00 p.m. Late Proposals will be rejected. No exceptions.

The Proposals will be publicly opened and read by the City Clerk or designee of the City of Roseville at 3:05 p.m. on Tuesday, March 24, 2026 at the Office of the City Clerk located at 311 Vernon Street, Roseville California for the following project:

JM-52 Park Project.

A pre-bid meeting will be held at N/A- No Pre-bid.

A Project Manual, including all Contract Documents and the Proposal forms for bidding this project, may be obtained on-line from the City of Roseville's website at https://www.roseville.ca.us/business/procurement_services/bids_rfps. All communications relative to this project shall be conducted through Public Purchase.

Bids shall be submitted on the City's Proposal Forms included in the Project Manual, plainly endorsed with the Bidder's name together with signed acknowledgement of any and all addenda. Proposal Forms shall be securely sealed in a suitable envelope marked with the name and address of the Bidder, and marked in capital letters on the front and back of the envelope as

follows:

[NAME OF PROJECT]

(Name of Bidder)

(Address of Bidder)

Whether mailed or personally delivered, all bids shall be addressed to the City of Roseville, Office of the City Clerk, 311 Vernon Street, Roseville, California, 95678.

Each bid must be accompanied by a Bid Guaranty in the form of a Certificate of Deposit, Certified or Cashier's Check, Bidder's Bond or Irrevocable Standby Letter of Credit in an amount equal to at least ten percent (10%) of the Bidder's Grand Total Price. The Bid Guaranty will be retained by the City and applied to any and all damages sustained by the City in the event that the successful Bidder fails or refuses to enter into the Contract awarded to it and to furnish all required bonds and Certificates of Insurance. The City intends to award the Contract to the lowest responsible Bidder based on the Grand Total Bid Price for all components of the Project. To the extent allowed by law, the City reserves the right to reject any and all bids and/or to waive any irregularities or informalities in any bid or in the bidding procedure. The City specifically reserves the right to not award the Contract after the opening of bids.

Any bid may be withdrawn at any time prior to the time fixed in the public notice for the deadline submission of bids only by written request for the withdrawal of the bid filed with the City Clerk. The request shall be executed by the Bidder or his or her duly authorized representative. The withdrawal of a bid does not prejudice the right of the Bidder to file a new bid by the submission deadline. Whether or not bids are opened exactly at the time fixed in the public notice for opening bids, a bid will not be received after the deadline submission of bids

FOR COUNCIL ONLY NOT FOR CONSTRUCTION

nor may any bid be withdrawn after the time fixed in the public notice for deadline for submission of bids. Immediately following the deadline for submission of bids all bids shall become the property of the City of Roseville and the City is under no obligation to return bids.

Bids will be examined and reported to the City Council within sixty (60) business days after the bid opening. Except as permitted by applicable law, no Bidder may withdraw its bid for a period of sixty (60) business days after the date of bid opening. Each Bidder will be notified of any award of the Contract by the City.

The City will affirmatively ensure non-discrimination on the basis of one or more of the following: race, religious creed, color, national origin, ancestry, physical disability, mental disability, medical condition, genetic information, marital status, sex, age, sexual orientation, or military and veteran status in the award and administration of contracts that it awards.

Pursuant to Public Contract Code Section 22300, the successful Bidder may submit certain securities in lieu of the City withholding retention of payments during the Project.

The City has determined that the Contractor shall possess a valid Class A, B or C-27 Contractor's license at the time that the bid is submitted, as well as any other license classification as may be required by the laws of the California for the performance of the work specified in the Contract Documents. Said license shall be maintained during the Contract period. Failure to possess the specified license shall render the bid nonresponsive and will act as a bar to the award of the Contract to any Bidder not possessing such a license at the time of bid submittal. The Contractor shall provide certification of the license, its number and the expiration date on the proposal form.

The work is to be done in Placer County. Pursuant to California Labor Code Section 1773, the City has ascertained the General Prevailing Rate of Wages in the County in which the

FOR COUNCIL ONLY NOT FOR CONSTRUCTION

work is to be done to be as determined by the Director of Industrial Relations of the State of California. The Contractor is hereby made aware that information regarding prevailing wage rates may be obtained from the State Department of Industrial Relations and/or the following website address: http://www.dir.ca.gov/dlsr/DPreWageDetermination.htm. The Contractor is required to post a copy of the applicable wage rates at the job site. Attention is directed to Section 5 "Legal Relations and Responsibility" of the General Conditions.

Pursuant to Labor Code Section 1771.1(b), notice is hereby given that a contractor or subcontractor shall not be qualified to bid on, be listed in a bid proposal, subject to the requirements of Section 4104 of the Public Contract Code, or engage in the performance of any contract for public work, as defined in Labor Code Sections 1720, et seq., unless currently registered and qualified to perform public work pursuant to Labor Code Section 1725.5 or exempt from registration requirements pursuant to Labor Code Section 1725.5(f). It is not a violation of Labor Code Section 1771.1 for an unregistered contractor to submit a bid that is authorized by Section 7029.1 of the Business and Professions Code or by Section 10164 or 20103.5 of the Public Contract Code, provided the contractor is registered to perform work pursuant to Labor Code Section 1725.5 at the time the contract is awarded or is exempt from registration requirements pursuant to Labor Code Section 1725.5(f). The Contractor is hereby notified that this project is subject to compliance monitoring and enforcement by the Department of Industrial Relations.

Vehicles with a GVWR greater than 8,500 lbs. and light – duty package delivery vehicles operated in California may be subject to the California Air Resources Board Advanced Clean Fleets regulations. Such vehicles may therefore be subject to requirements to reduce emissions and air pollutants. For more information, please visit the CARB Advanced Clean Fleets

FOR COUNCIL ONLY NOT FOR CONSTRUCTION

webpage at https://ww2.arb.ca.gov/our-work/programs/advanced-clean-fleets. In addition, certain off-road diesel vehicles may be subject to the CARB In-Use Off-Road Diesel-Fueled Fleets Regulation. For more information, please visit the CARB In-Use Off-Road Diesel-Fueled Fleets Regulation webpage at https://ww2.arb.ca.gov/our-work/programs/use-road-diesel-fueled-fleets-regulation.

All questions prior to the deadline for bid submissions shall be directed to the attention of Joshua Cervantes via Public Purchase Q&A at www.publicpurchase.com or, via email at JRCervantes@roseville.ca.us. The deadline for submissions of questions and clarifications regarding the Contract Documents is 7 calendar days before the deadline for bid submissions. Only Addenda issued by the City are binding.

_____
City Clerk, City of Roseville

Dated: _____

Published: _____

FOR COUNCIL ONLY NOT FOR CONSTRUCTION

INSTRUCTIONS TO BIDDERS

SECTION 1. GENERAL

1-1.01 **GENERAL.** These Instructions to Bidders form a part of the Contract Documents. Capitalized terms are defined in the General Conditions Section 1.

1-1.02 **EXAMINATION OF PLANS, CONTRACT DOCUMENTS AND SITE OF THE WORK.** The Bidder shall examine carefully the site of the Work and all the Contract Documents, including these Instructions to Bidders, and shall inform itself of the conditions relating to the execution of the Work. Failure to do so will not relieve the successful Bidder of its obligation to enter into an Agreement and complete the Work in strict accordance with the Contract Documents. Conditions relating to the execution of the Work include the requirements of federal, state, and local laws, statutes and ordinances relative to the execution of Work, including, but not limited to, applicable regulations concerning prevailing wage rates, non-discrimination in the employment of labor, protection of the public, employee health and safety, and environmental protection.

The submission of a bid shall be conclusive evidence that the Bidder has investigated and is satisfied as to the conditions to be encountered, as to the character, quality, and scope of Work to be performed, the quantities of materials to be furnished, and as to the requirements of all the Contract Documents.

1-1.03 **EXISTING INFORMATION.** Where the Department has made investigations of site conditions, including subsurface conditions in areas where Work is to be performed under the Contract, such investigations are made only for the purpose of study and design. City does not represent that such conditions as found in these investigations or inferences or conclusions drawn as a result of these investigations will represent actual site

FOR COUNCIL ONLY NOT FOR CONSTRUCTION

conditions and hereby disclaims any liability as a result of Contractor's or Bidder's reliance on such investigations. City will presume that all Bidders have conducted their own site investigations, including investigations of subsurface conditions. Where such investigations have been made, Bidders or Contractors may, upon written request, inspect the records of the Department as to such investigations subject to the conditions set forth in these Instructions to Bidders. Such inspection of records may be made only at the location noted above. The records of such investigations are not a part of the Contract Documents and are shown solely for the convenience of the Bidder or Contractor. The City assumes no responsibility whatsoever with respect to the sufficiency or accuracy of the investigations made, the records thereof, or of the interpretations set forth therein or made by the City in its use thereof. The City makes no warranty or guarantee, either express or implied, that the conditions indicated by such investigations or records are representative of those existing throughout such areas, or any part thereof, or that unforeseen developments may not occur, or that materials other than, or in proportions different from those indicated, may not be encountered.

No information derived from such inspection of records of investigations or compilation thereof made by the City, the Department or from the Engineer, or his or her assistants, will in any way relieve the Bidder or Contractor from properly examining the site and making such additional investigations as it may elect, or from properly fulfilling the terms of the Contract.

FOR COUNCIL ONLY NOT FOR CONSTRUCTION

SECTION 2: BID REQUIREMENTS

2-1.01 **PROPOSAL FORMS.** The Department will furnish to each Bidder standard Proposal Forms, which, when filled out and executed may be submitted as the bid. Proposals shall include all pages in the Project Manual with page numbers marked "PROP" plus the Addendum acknowledgment form (front sheet) from all Addenda received by the Bidder. Proposals shall be removed from the Project Manual. The full Project Manual shall not be submitted with the proposal. Bids not presented on forms so furnished will be disregarded.

The Proposal and one (1) copy thereof shall be submitted as directed in the "Notice to Contractors" under sealed cover plainly marked as a Proposal, and identifying the project to which the Proposal relates and the date of the bid opening therefor. Proposals which are not properly marked may be disregarded.

All blank spaces in the Proposal must be completed, as required, in ink. All price information shall be shown, clearly legible, in figures where required.

The Bidder shall sign the Proposal in the blank space provided therefor. If the Bidder is the sole owner, the Proposal shall be signed by the owner. If the Bidder is a corporation, the legal name of the corporation and its State of incorporation shall be set forth and the Proposal shall be signed by at least two officers authorized to sign contracts on behalf of the corporation. If the Bidder is a partnership, the true name of the firm shall be set forth, the names and addresses of all partners shall be given and the Proposal shall be signed by a partner in the firm authorized to sign contracts on behalf of the partnership. If the Bidder is a joint venture, the Proposal shall be signed on behalf of each participating company by officers or other individuals who have the full and proper authorization to do so. If the Proposal is signed by an agent of the Bidder other than an officer of a corporation or a member of a partnership, a notarized Power of

FOR COUNCIL ONLY NOT FOR CONSTRUCTION

Attorney must be on file with the City prior to opening of bids or must be submitted with the Proposal. If requested by the City, the Bidder shall promptly submit evidence satisfactory to the City of the authority of the person signing the Proposal.

2-1.02 **SUBMISSION OF BIDS.** Bids must be submitted at the prescribed time and location specified in the Notice to Contractors. Any submission received after the prescribed time shall be rejected, regardless of whether or not bids are opened exactly at the prescribed time.

Any unauthorized conditions or qualifications entered on, or changes made to, the Proposal may render it invalid and may cause its rejection.

No telegraphic, telephonic, or facsimile or other electronically transmitted bids will be considered.

2-1.03 **REQUIRED LISTING OF PROPOSED SUBCONTRACTORS.** Each Proposal shall list the name, address and Contractor license number of each Subcontractor to whom the Bidder proposes to subcontract portions of the Work in an amount in excess of one-half of one percent (0.5%) of its total bid, in accordance with Section 4100 to 4114, inclusive, of the Public Contract Code for the State of California. The Bidder shall list the Subcontractor's license number and the portion of the Work that will be done by each Subcontractor. If the Bidder fails to specify a Subcontractor for any portion of the Work, the Bidder agrees to perform that portion of the Work itself, and represents that it is qualified to perform that portion of the Work itself. The Bidder's attention is invited to other provisions of the Public Contract Code related to the imposition of penalties for a failure to observe its provisions by using unauthorized Subcontractors or by making unauthorized substitutions.

2-1.04 **CONTRACTOR'S LICENSING LAWS.** Attention is directed to the

FOR COUNCIL ONLY NOT FOR CONSTRUCTION

provisions of Business and Professions Code Chapter 9 of Division 3 concerning the licensing of Contractors.

All Bidders at the time of bid submittal shall be licensed as Contractors in accordance with the laws of this State. Any Bidder or Contractor not so licensed is subject to the penalties imposed by such laws. The form of Contractor's license required is stated in the Notice to Contractors, provided that the City makes no representation as to whether the State may require other or additional licenses. It is the Bidder's and Contractor's responsibility to obtain the correct Contractor's licenses. Bidders shall be skilled and regularly engaged in the general class or type of Work called for under this Contract.

All Bidders and Contractors, including Subcontractors, shall have a current City business license before undertaking any Work.

2-1.05 **NONCOLLUSION DECLARATION.** By submitting a bid, the Bidder represents and warrants that such bid is genuine and not a sham or collusive or made in the interest or on the behalf of any person therein named, and that the Bidder has not, directly or indirectly, included or solicited any other Bidder to put in a sham bid, or any other person, firm, or corporation to refrain from bidding, and that the Bidder has not in any manner sought collusion to secure the Bidder an advantage over any other Bidder.

Bidders shall submit a properly completed and executed "Noncollusion Declaration" in the form required by Public Contract Code Section 7106 and provided with the Proposal (PROP-11).

2-1.06 **DISQUALIFICATION, REMOVAL OR OTHER PREVENTION OF BIDDING.** A bid may be rejected on the basis of a Bidder, any officer of such Bidder, or any employee of such Bidder who has a proprietary interest in such Bidder, having been disqualified,

FOR COUNCIL ONLY NOT FOR CONSTRUCTION

removed, or otherwise prevented from bidding on, or completing a federal, state, or local project because of a violation of law or a safety regulation.

2-1.07 **PROPOSAL GUARANTY.** All bids shall be accompanied by one of the following forms of Bidder's security: Cash, a cashier's check, a certified check, or a Bidder's bond executed by an admitted California surety insurer, made payable to the City of Roseville, or any other form of security deemed acceptable by the City Attorney. The security shall be in an amount equal to at least ten percent (10%) of the amount bid. A bid will not be considered unless one of the form of Bidder's security is enclosed with it.

A Bidder's bond shall conform to the City's bond form in the Proposal and shall be properly filled out and executed.

2-1.08 **SCHEDULE OF BID PRICES.** Bidders are directed to submit unit and lump sum prices for all Work set forth in the Contract Documents on the Proposal Form entitled "Schedule of Bid Prices."

Unit prices and lump sum prices, as indicated, must be entered in the appropriate spaces provided in the Schedule of Bid Prices. If applicable, unit prices shall be multiplied by the quantities shown, and the total shall be inserted in the Amount column. In the event of any error or discrepancy between the unit price and the calculated amount, the unit prices shall govern. The City may correct any mathematical errors apparent on the face of the bid.

The amounts shown in the Amount column must be added together in arriving at the Grand Total Bid Price.

Amounts for Allowance bid items must be entered in the exact amount in the Amount column.

The prices included within the Schedule of Bid Prices shall include all costs for labor,

FOR COUNCIL ONLY NOT FOR CONSTRUCTION

materials, tools, equipment, services, Subcontractors, suppliers, taxes, insurance, shipment, delivery, overhead, profit, and all other costs necessary to perform the Work in accordance with the Contract Documents.

The Grand Total Bid Price shall be indicated in the Summary table form included with the Schedule of Bid Prices. The Grand Total Bid Price shall be the sum of the amounts bid for each of the designated portions of the Work, as more specifically described on the Schedule of Bid Prices form itself.

Full compensation for complying with the Contract Documents, including requirements of the Standard Specifications, the General Conditions, Supplemental Conditions, and all warranties, shall be considered included in the bid items and no additional compensation shall be allowed therefor.

Full compensation for completion of all work as shown on the plans, as specified in the Specifications, and as directed by the City, shall be considered included in the bid items and no additional compensation shall be allowed.

Bidders are strongly discouraged from submitting unbalanced bids. As used herein, the term "unbalanced bid" is defined as any bid that does not include a reasonable proportionate allocation of indirect costs and profit of each bid item indicated in the Schedule of Bid Prices. The City reserves the right to reject any unbalanced bid if the City determines that there is a reasonable doubt that an acceptance of the bid will not result in the lowest ultimate cost to the City with regard to the work or a disproportionate distribution of contract funds.

The City reserves the right to delete any bid item in its entirety and/or significantly reduce the quantity of Work under a bid item. The City makes no representation that any Work under a bid item will be performed during the course of the Project or that the Work will be

FOR COUNCIL ONLY NOT FOR CONSTRUCTION

performed at the quantities included in the Schedule of Bid Prices. As provided in the General Conditions, for any deleted Work, Contractor shall not be entitled to payment of the indirect costs and profit included for said bid item. All bid items shall be considered distinct and severable from the remaining bid items, and each Bidder acts at its peril if its bid is unbalanced.

The City shall compare bids on the basis of the Grand Total Bid Price, which includes the base bid and any alternates designated on the Schedule of Bid Prices. Alternates may or may not be awarded, or may be awarded in any combination, at the City's discretion.

2-1.09 **WITHDRAWAL OF PROPOSALS.** Any bid may be withdrawn at any time prior to the time fixed in the Notice to Contractors for the opening of bids, provided that a request in writing, executed by the Bidder or its duly authorized representative, for the withdrawal of such bid is filed with the City Clerk. Facsimile and electronic mail requests are not acceptable. The withdrawal of a bid shall not prejudice the right of a Bidder to file a new bid. The withdrawal of any bid after the time fixed in the Notice to Contractors for the opening of bids will not be permitted.

2-1.10 **ADDENDUM.** Proposals shall include all costs and account for all Addenda issued prior to opening of bids. The Bidder is responsible for verifying that all issued Addenda have been received. An Addendum acknowledgment form for each Addendum shall be included as part of the Proposal submittal.

2-1.11 **PUBLIC OPENING OF PROPOSALS.** Proposals will be publicly opened and read at the time and place indicated in the Notice to Contractors. Bidders or their authorized agents are invited to be present.

2-1.12 **TRENCHING AND EXCAVATION WORK.** In accordance with the provisions of California Labor Code Section 6707, if the Work involves construction of a

FOR COUNCIL ONLY NOT FOR CONSTRUCTION

pipeline, sewer, sewage disposal system, boring or jacking pits, or similar trenches or open excavations, which are five feet (5') or deeper, each bid submitted shall contain, as a bid item, adequate sheeting, shoring, and bracing, or equivalent method, for the protection of life or limb, which shall conform to all applicable safety orders.

FOR COUNCIL ONLY NOT FOR CONSTRUCTION

SECTION 3: EVALUATION OF BIDS

3-1.01 **BID EVALUATION PROCESS.** Bids will be evaluated to determine the apparent low Bidder. The apparent low Bidder will be determined on the basis of the Grand Total Bid Price, as shown in the Schedule of Bid Prices. If additive or deductive alternates are used in the Schedule of Bid Prices, the apparent low Bidder will be the Bidder with the lowest total of the bid prices for base contract items plus the alternates designated by the City as those that will be used for determining the lowest bid price. However, the City reserves the right to (1) not award any alternates or (2) award any combination of alternates.

In case of discrepancy between the total of the base contract items and any specified alternates and the stated Grand Total Bid Price, the total of the base contract items plus specified alternates shall prevail. Any mathematical errors that appear on the face of the bid will be corrected by the City and the City will use the mathematically corrected addition. For example, if the mathematical total of Bidder's base contract items plus specified alternates equals $1,000,000, but the Bidder has written $1,250,000 as the Grand Total Bid Price, the City will consider $1,000,000 to be the Bidder's Grand Total Bid Price for purposes of comparison to other Bidders and actual bid award. The City reserves its rights to reject or accept bids based on discrepancies between the stated Grand Total Bid Price and the actual mathematical total of the base contract bid items, plus specified alternates.

3-1.02 **REJECTION OF IRREGULAR PROPOSALS.** Proposals may be rejected in the City's sole discretion if they show any alterations of form, additions not called for, conditional bids, incomplete bids, erasures, or irregularities of any kind. However, the City reserves the right to waive any minor irregularities and informalities in any bid or in the bid procedure for any reason.

FOR COUNCIL ONLY NOT FOR CONSTRUCTION

3-1.03 **COMPETITIVE BIDDING.** If more than one proposal is offered by any individual, firm, partnership, corporation, association, or any combination thereof, under the same or different names, all such proposals may be rejected. A party who has quoted prices on materials or Work to a Bidder is not thereby disqualified from quoting prices to other Bidders, or from submitting a bid directly for the materials or Work.

All Bidders are put on notice that any collusive agreement to control or affect the awarding of this Contract is in violation of the competitive bidding requirements of the City Charter, State Contract Act and the Business and Professions Code and may render void any Contract let under such circumstances.

3-1.04 **RELIEF OF BIDDERS.** If the Bidder claims a mistake was made in its bid, the Bidder shall give the Department written notice within five (5) Days after the opening of the bids of the alleged mistake, specifying in the notice in detail how the mistake occurred. No relief from a claimed mistaken bid shall be granted unless such mistake clearly appears on the face of the bid submitted to the City. Claimed mistakes on backup worksheets, spreadsheets, computerized bidding programs, or any other similar calculative bidding mistake which is not apparent on the face of the bid shall not under any circumstance be considered as a basis for relief. The burden of proving the occurrence of a mistake entitling a Bidder to relief from its bid rests entirely on the Bidder. Relief from bids shall be in the City's sole discretion.

FOR COUNCIL ONLY NOT FOR CONSTRUCTION

SECTION 4: AWARD AND EXECUTION OF CONTRACT

4-1.01 **AWARD OF CONTRACT.** The City reserves the right to reject any and all proposals and to award (or not award) any combination of bid items at its option. Any such award will be to the lowest responsible Bidder whose proposal complies with the requirements prescribed for the bid items awarded. Such award, if made, will be made within sixty (60) business days after the opening of the proposals. If the lowest responsible Bidder refuses or fails to execute the Contract, or provide an acceptable Performance Bond, Payment Bond, and insurance certificate(s), the City may award the Contract to the second lowest responsible Bidder. Such award, if made, will be made within eighty-two (82) business days after the opening of proposals. If the second lowest responsible Bidder refuses or fails to execute the Contract, or provide an acceptable Performance Bond, Payment Bond, and insurance certificate(s), the City may award the Contract to the third lowest responsible Bidder. Such award, if made, will be made within one hundred four (104) business days after the opening of the proposals. The above time periods within which the award of Contract may be made are subject to extension for such further period as may be agreed upon in writing between the City and the Bidder concerned.

4-1.02 **RETURN OF BIDDER'S SECURITIES.** Within ten (10) Days after the award of the Contract, the City Clerk will return all Bidders' securities, other than Bidders' bonds, accompanying the proposals that are not to be further considered in making the award. Retained Bidders' securities will be held until the Contract has been fully executed, after which all Bidders' securities, except Bidders' bonds and any Bidders' securities that have been forfeited, will be returned.

4-1.03 **CONTRACT BONDS.** The successful Bidder shall furnish two (2)

FOR COUNCIL ONLY NOT FOR CONSTRUCTION

bonds in the form contained in the section entitled Insurance Broker Information Packet and Bonds. One (1) bond shall secure the payment of the claims of laborers, mechanics or materialmen employed on the Work under the Contract, and the other bond shall guarantee the faithful performance of the Contract.

Each of the two (2) bonds shall be in a sum equal to one hundred percent (100%) of the Contract Price. If the Contract Price increases by the issuance of Change Orders, the penal amounts of the bonds required shall increase accordingly. Sureties on each of said bonds shall be satisfactory to the City.

All alterations, extensions of time, extra and additional Work, and other changes authorized by the Standard Specifications, the General Conditions, the Supplemental Conditions or any part of the Contract may be made without securing the consent of the surety or sureties on the Contract bonds.

Furthermore, the successful Bidder shall furnish a certificate from the County Clerk as required by California Civil Code of Procedure Section 995.660(a)(3).

4-1.04 **INSURANCE.** At the time of the execution of the Contract, the Contractor shall, at its own expense, procure, and at all times during the prosecution of the Work maintain in full force and effect Worker's Compensation Insurance, and Liability Insurance as specified in the General Conditions. The Contractor shall provide a Certificate of Insurance in the form contained in the section entitled Insurance Broker Information Packet.

4-1.05 **EXECUTION OF CONTRACT.** The Contract shall be signed by the successful Bidder and returned, together with all the required Contract bonds and insurance certificates, within fifteen (15) Days after the Contract has been awarded, or as otherwise directed, in writing, by the City.

FOR COUNCIL ONLY NOT FOR CONSTRUCTION

If the Bidder is an individual, the Contract shall be executed personally by the Bidder. If the Bidder is a partnership, it is desirable that the Contract be executed by all of the partners, but it may be executed by one of them. If the Bidder is a corporation, it must be executed by two officers of the corporation consisting of (1) the chairman of the board, president or vice president; and (2) the secretary, assistant secretary, chief financial officer, treasurer or assistant treasurer, or by a person authorized by the corporation to execute written contracts on its behalf, and the corporate seal affixed thereto. In the alternative, a person other than an officer may sign the Contract, provided evidence satisfactory to the City is provided indicating the individual's authority to bind the corporation. If the corporate seal is not affixed to the Contract, or if it is executed by a person other than officers, or only by one officer, there must be attached to the Contract a certified copy of a resolution of the corporation authorizing such officer or person to execute written contracts for and on behalf of the corporation. If the Bidder is a joint venture, the Contract must be executed on behalf of each participating firm by officers or other individuals who have the full and proper authorization to do so.

4-1.06 **FAILURE TO EXECUTE CONTRACT.** Failure of the lowest responsible Bidder, the second lowest responsible Bidder, or the third lowest responsible Bidder to execute the Contract and file acceptable bonds and insurance as provided within fifteen (15) Days after the Contract has been awarded, or as otherwise directed, in writing, by the City, shall be just cause for annulment of the award and forfeiture of the Bidder's security. The successful Bidder may file with the City Clerk a written notice, signed by the Bidder or Bidder's authorized representative, specifying that the Bidder will refuse to execute the Contract if presented to Bidder. The filing of such notice shall have the same force and effect as the failure of the Bidder to execute the Contract and furnish acceptable bonds within the time prescribed.

FOR COUNCIL ONLY NOT FOR CONSTRUCTION

SECTION 5: BID PROTEST PROCEDURES

5-1.01 **POLICY/PROCEDURES.** It is the policy of the City to consider fully and adjudicate promptly protests filed by prospective Bidders relating to the City's bidding procedure or award of the Contract. Protests shall be filed and processed in accordance with Section 4.12.150 of the Roseville Municipal Code. A Bidder's failure to follow the bid protest procedures may result in rejection of the protest by the City.

FOR COUNCIL ONLY NOT FOR CONSTRUCTION

PROPOSAL TO THE DEPARTMENT OF Parks, Recreation & Libraries

Project: JM-52 Park Project

Name of Bidder _____ Business Phone _____

Business Address _____

Place of Business _____

Contractor's License No. _____

License Expiration Date_____

License Classification Type _____

DIR Registration No. _____

Type of business organization: _____

*If a Corporation, incorporated under the laws of the State of: _____

City of Roseville Business License No._____

The undersigned Bidder herewith submits this Proposal and binds itself on award by the City of Roseville under this bid to execute a Contract in accordance with its bid and the Contract Documents.

The Notice to Contractors, Instructions to Bidders, Form of Agreement, Specifications, General Conditions, Supplemental Conditions, Contract Drawings, and Addenda, if any, are made part of this bid and all provisions thereof are hereby accepted, and all representations and warranties are required thereby are hereby affirmed.

The work to be done is described in the Bidding Documents entitled _____

_____, City of Roseville, California.

This offer shall be irrevocable for a period of sixty (60) Days after the date on which bids are opened.

FOR COUNCIL ONLY NOT FOR CONSTRUCTION

The undersigned Bidder understands that any clarification made to the above or any new and different conditions or information submitted on or with its Proposal, other than that requested, may render the bid non-responsive.

The undersigned, as Bidder, declares that the only persons or parties interested in this Proposal as principals are those named herein; that this Proposal is made without collusion with any other person, firm, or corporation; that the Bidder has carefully examined the location of the proposed Work, the attached Form of Agreement, and the plans, Specifications, and other Contract Documents; and agrees if this Proposal is accepted, that it will contract with the City of Roseville, in the form of a copy of the Agreement contained in the Project Manual, to provide all necessary machinery, tools, apparatus and other means of construction, and to do all the work and furnish all the materials specified in the Contract Documents, in the manner and time therein prescribed, and according to the requirements of the Director, as therein set forth, and that the Bidder will take in full payment therefore prices indicated in the Schedule of Bid Items, including all work modified by addendum numbers _____. (IF NONE, STATE NONE).

Bids are required for all Bid Items. The amount of the Bid for comparison purposes will be the total of all items awarded.

The Bidder shall set forth for each item of work, in clearly legible figures, an item ("unit") price and a total for the item in the respective spaces provided for this purpose in the Schedule of Bid Items.

The prices included within the Schedule of Bid Items include all costs for labor, materials, tools, equipment, services, Subcontractors, suppliers, taxes, insurance, shipment, delivery, overhead, profit, and for all other costs necessary to perform the Work in accordance

FOR COUNCIL ONLY NOT FOR CONSTRUCTION

with the Contract Documents.

Accompanying this Proposal is _____.

(Notice: Insert the words "Cash $_____," "Cashier's Check," "Certified Check," or "Bidder's Bond," as the case may be, in an amount equal to at least ten percent (10%) of the total of the Bid.)

The names of all persons interested in the foregoing Proposal as Principals, are as follows: _____

_____

_____

_____

If SOLE OWNER, execute here:

I sign as sole owner of the business named above:

_____

If PARTNERSHIP, one or more partners sign here:

The undersigned certify that we are partners in the business named above and that we sign this bid with the full authority to do so:

_____

_____

If CORPORATION, execute here:

Corporate Name: _____

FOR COUNCIL ONLY NOT FOR CONSTRUCTION

Incorporated under the laws of the State of _____

The undersigned certify that they sign this bid with the full and proper authorization so to do:

By_____	By_____
*Signature of Authorized Official**	*Signature of Authorized Official**
_____	_____
Title	*Title*
_____	_____
Typewritten or Printed Name	*Typewritten or Printed Name*

If JOINT VENTURE, execute here:

Joint Venture name composed of: _____

The undersigned certify that they sign this bid with the full and proper authorization so to do:

_____	_____
*Signature of Authorized Official**	*Signature of Authorized Official**
_____	_____
Title	*Title*
_____	_____
Typewritten or Printed Name	*Typewritten or Printed Name*

*If Bidder is a partnership or Joint Venture, give the full names of all partners and/or Joint Ventures in the space provided (use additional sheet if required). If Bidder is a corporation, two signatures are required as follows: (1) the Chairman, President, or Vice-President and (2) the Secretary, Assistant Secretary, Chief Financial Officer, Treasurer, or Assistant Treasurer. In the alternative, this Agreement may be executed by a single officer or a person other than an officer provided that evidence satisfactory to City is provided demonstrating that such individual is authorized to bind the corporation (example, a copy of a certified resolution from the corporation's board or a copy of the corporation's bylaws).

FOR COUNCIL ONLY NOT FOR CONSTRUCTION

[LIST OF SUBCONTRACTORS FOLLOWS ON NEXT PAGE.]

FOR COUNCIL ONLY NOT FOR CONSTRUCTION

LIST OF SUBCONTRACTORS

Contractor's Name: _____

The Bidder is required to furnish the following information in accordance with the provisions of Section 4100 and 4114, inclusive, of the Public Contract Code of the State of California. This list and information shall include all Subcontractors that perform work, provide labor or render services to the Bidder in connection with the Project in an amount in excess of one-half of one percent (0.5%) of the total amount of the Bidder Grand Total Price.

FOR COUNCIL ONLY NOT FOR CONSTRUCTION

PORTION/ TYPE OF WORK	% OF CONTRACT	SUB-CONTRACTOR'S NAME	CONTRACTOR LICENSE NO.	DIR REG NO.	BUSINESS ADDRESS (CITY, STATE)

SECURITY FOR COMPENSATION CERTIFICATE

(Required by California Labor Code Section 1861)

TO: City Council
City of Roseville

I am aware of the provisions of Section 3700 of the Labor Code which require every employer to be insured against liability for workers' compensation or to undertake self-insurance in accordance with the provisions of that code, and I will comply with such provisions before commencing the performance of the work of this Contract.

FOR COUNCIL ONLY NOT FOR CONSTRUCTION

_____

_____
(Signature of Bidder)

_____

_____
Business Address

_____
Telephone

BIDDER'S BOND

City Council of the City of Roseville

KNOW ALL MEN BY THESE PRESENTS:

That we _____

_____, as PRINCIPAL, and

_____

a, _____ and duly authorized to transact business under the laws of the State of California, as SURETY, are held and firmly bound unto the City of Roseville in the penal sum of _____ dollars ($_____), being at least TEN PERCENT (10%) OF THE TOTAL AMOUNT OF THE BID of the Principal above named, submitted by said Principal to the City of Roseville, acting by and through the Public Works Director, for the work described below, for the payment of which sum in lawful money of the United States, well and truly to be made, to the Director of the Department to which said Bid was submitted, we bind ourselves, our heirs, executors, administrators and successors, jointly and severally, firmly by these presents.

THE CONDITION OF THIS OBLIGATION IS SUCH,

That whereas the Principal has submitted the above-mentioned Bid to the City Council of the City of Roseville, as aforesaid, for certain construction specifically described as follows, for which Bids are to be opened at the Office of the City Clerk located at 311 Vernon Street, Roseville, California, on _____, 20__ FOR

_____

(Copy here the exact title of work as it appears on the Proposal.)

FOR COUNCIL ONLY NOT FOR CONSTRUCTION

NOW, THEREFORE, IF THE AFORESAID PRINCIPAL is awarded the Contract and, within the time and manner required under the Contract Documents, after the prescribed forms are presented for signature, enters into a written Contract, in the prescribed form, in accordance with the Bid, and files all insurance and two (2) Bonds with the Department, one (1) to guarantee Faithful Performance and the other to guarantee Payment for Labor and Materials, as required by law, then this obligation shall be null and void; otherwise, it shall be and remain in full force and effect.

IN WITNESS WHEREOF, we have hereunto set our hands and seals on this _____ day of _____, 20___.

_____(Seal)

_____(Seal)

_____(Seal)
Principal

_____(Seal)

_____(Seal)

_____(Seal)
Surety

_____

_____
Business Address

NOTE: To be considered complete, both the Principal and the Surety must sign this Bidder's Bond. In addition, signatures of those executing for the Surety must be properly acknowledged.

FOR COUNCIL ONLY NOT FOR CONSTRUCTION

Project JM-52 Park Project

Contractor _____

SCHEDULE OF BID ITEMS

FOR COUNCIL ONLY NOT FOR CONSTRUCTION

SCHEDULE OF BID ITEMS

JM-52 PARK

The bidder, in compliance with the published Notice to Contractors, having examined the Plans and Specifications, any and all addenda, any related documents, and all of the sites of the proposed work, and being familiar with all the conditions surrounding the construction of the proposed project, including the availability of material, hereby proposes to furnish all labor, materials, and supplies, and to construct the project in accordance with the Contract Documents, within the time period set forth therein, and at the prices stated. This is a lump sum bid project. These prices are to include all labor, materials, supplies, and all other expenditures incidental to complete compliance to the Contract Documents.

The work to be included in the Contract shall be determined by the City prior to award of Contract. **The amount of the bid for comparison and award purposes shall be the total amount set forth in the "Grand Total Bid Price".** The City reserves the right to award none, all or selected add alternates as the budget permits.

BASE BID:
Base bid includes all work as shown on the plans, project manual, and addenda to construct the **JM-52 Park** project.

Numerical **Base** Bid: $_____

Written **Base** Bid: _____ dollars and _____

ADD ALTERNATES: (Refer to Plans for Add Alternative Items)

Add Alternate #1 – Sodded Turf in lieu of Seed

Numerical **Additive Alternative #1** Bid: $_____

Written **Additive Alternative #1** Bid: _____ dollars and _____

Add Alternate #2 – Seeded Turf Area with Concrete Mowstrip an Irrigation.

Numerical **Additive Alternative #2** Bid: $_____

Written **Additive Alternative #2** Bid: _____ dollars and _____

Add Alternate #3 – Sod in lieu of Add Alt #2 Seeded Turf (contingent on award of Add Alt-2)

Numerical **Additive Alternative #3** Bid: $_____

Written **Additive Alternative #3** Bid: _____ dollars and _____

Add Alternate #4 – Bark Mulch Only Buffer

Numerical **Additive Alternative #4** Bid: $_____

Written **Additive Alternative #4** Bid: _____ dollars and _____

FOR COUNCIL ONLY NOT FOR CONSTRUCTION

SCHEDULE OF BID ITEMS- continued

Add Alternate #5 – Concrete Pathways in Lieu of Dirt Natural Trail

Numerical **Additive Alternative #5** Bid: $_____

Written **Additive Alternative #5** Bid: _____ dollars and _____

Add Alternate #6 – Furnish and Install Engineered Shade Sail Structure

Numerical **Additive Alternative #6** Bid: $_____

Written **Additive Alternative #6** Bid:_____ dollars and _____

GRAND TOTAL BID PRICE:

Lump Sum Base Bid plus Add Alternates #1 through #6

Numerical **Grand Total Bid Price**: $_____

Written **Grand Total Bid Price**: _____ dollars and _____

FOR COUNCIL ONLY NOT FOR CONSTRUCTION

The additions/deletions sheets (PROP – 13C through PROP – 13E) are required to be completed in their entirety.

The additions/deletions sheets will not be considered for bid award but may be used for contract change orders.

Contractor Name (print or type):

Signature (by authorized representative):

Date: _____ License No.: _____ Class: _____

JM-52 PARK PROJECT

For Additions and Deletions Only

Contractor shall provide itemized costs as shown below for use during construction for additions or deletions only. Unit costs to be listed are based on the project plans, specifications, Parks Construction Standards and the Design & Construction Standards, unless otherwise noted. Items listed are not necessarily shown on the plans or identified in the Technical Specifications.

Item	Description	Unit	Unit Cost
1	EC-2 Preservation of Existing Vegetation	sf	
2	EC-3 Hydraulic Mulch	sf	
3	EC-4 Hydroseeding	sf	
4	EC-6 Straw Mulch	sf	
5	EC-7 Geotextiles and Mats	sf	
6	EC-8 Wood Mulching	sf	
7	EC-10 Velocity dissipation device	ea	
8	EC-11 Slope Drains	ea	
9	EC-14 Compost Blanket	sf	
10	EC-16 Non-Vegetative Stabilization	sf	
11	SE-1 Silt Fence	lf	
12	SE-5 Fiber Rolls	lf	
13	SE-6 Gravel Bag Berm	ea	
14	SE-7 Street Sweeping and Vacuuming	ea	
15	SE-8 Sandbag Barrier	lf	
16	SE-9 Straw Bale Barrier	lf	
17	SE-10 Storm Drain Inlet Protection	ea	
18	TC-1 Stabilized construction entrance/exit	ea	
19	TC-3 Entrance/outlet tire wash	ea	
20	Clearing and Grubbing	sf	
21	Site Security Fencing	lf	
22	Rough Grading (Earthwork)	cy	

FOR COUNCIL ONLY NOT FOR CONSTRUCTION

Items 1 through 19 are to be consistent with requirements detailed in California Stormwater Quality Association Stormwater Best Management Practice Handbook, latest edition.

JM-52 PARK PROJECT

For Additions and Deletions Only (continued)

Item	Description	Unit	Unit Cost
23	Finish grading (earthwork)	sf	
24	1" Schedule 80 PVC Pipe	lf	
25	12" Storm drain, PVC, SDR-35	lf	
26	6" Storm drain, PVC, SDR-35	lf	
27	4" Storm drain, PVC, SDR-35	lf	
28	4" Sanitary Sewer, SDR-35	lf	
29	1" Domestic Water Service, meter, backflow	ls	
30	2" Recycled Water Service, Meter	ea	
31	Sanitary Sewer Cleanout	ea	
32	12"x12" Storm Drain Catch Basin	ea	
33	24"x24" Storm Drain Drop Inlet	ea	
34	Storm Drain Connection to Existing SD Stub	ea	
35	Electrical POC	ls	
36	Concrete Paving - ROW (per DS Standard)	sf	
37	Concrete Paving (per Parks detail PK-31)	sf	
38	Redwood Header Board	lf	
39	Concrete Mow Curb (6")		
40	Concrete Mow Curb (12")	lf	
41	Stabilized Decomposed Granite Paving	sf	
42	Drinking Fountain with Bottle Filler	ea	
43	Picnic Table	ea	
44	Picnic Table, Accessible	ea	
45	Park Bench with Back	ea	
46	Basketball Hoop, standard, backboard, Assembly	ea	
47	Park Identification Sign	ea	
48	16' Pole Light LED	ea	
49	Trash Receptacle	ea	
50	Play Area Curb (PK-36)	lf	

FOR COUNCIL ONLY NOT FOR CONSTRUCTION

JM-52 PARK PROJECT

For Additions and Deletions Only (continued)

Item	Description	Unit	Unit Cost
51	Play Equipment (small)	ls	
52	Engineered Wood Fiber (12" depth)	cy	
53	Drain rock (3" depth)	cy	
54	Play Area Access Ramp	ea	
55	Playground Rules Sign	ea	
56	Irrigation Booster Pump	ls	
57	Irrigation Controller with Enclosure	ea	
58	2" Recycled Water Filter (Amiad)	ls	
59	Flow meter and Master Valve	ls	
60	Irrigation Mainline 3"	lf	
61	Irrigation Control Wire (#12,#14 AWG-UF)	lf	
62	6" Sleeve (Sch 40)	lf	
63	Irrigation Lateral Lines PVC	lf	
64	Irrigation Remote Control Valve 2"	ea	
65	Irrigation Remote Control Valve 1.5"	ea	
66	Irrigation Remote Control Valve 1"	ea	
67	Quick Coupling Valve 1"	ea	
68	R-VAN Rotary Assembly incl. Swing Joint	ea	
69	Tree Bubbler	ea	
70	Soil Amendments	sf	
71	Hydroseeded Turf	sf	
72	Sodded Turf	sf	
73	Install Trees (15 Gal.)	ea	
74	Install Trees (24" Box)	ea	
75	Install Shrubs (5 Gallon)	ea	
76	Install Shrubs/Grasses (1 Gallon)	ea	
77	Install Groundcover Roses (2 Gallon)	ea	
78	Bark Mulch (3")	cy	
79	Landscape Maintenance (per 30 Day)	ea	

FOR COUNCIL ONLY NOT FOR CONSTRUCTION

NONCOLLUSION DECLARATION TO BE EXECUTED BY
BIDDER AND SUBMITTED WITH BID

The undersigned declares:

I am the _____ of _____, the party making the foregoing bid.

The bid is not made in the interest of, or on behalf of, any undisclosed person, partnership, company, association, organization, or corporation. The bid is genuine and not collusive or sham. The Bidder has not directly or indirectly induced or solicited any other Bidder to put in a false or sham bid. The Bidder has not directly or indirectly colluded, conspired, connived, or agreed with any Bidder or anyone else to put in a sham bid, or to refrain from bidding. The Bidder has not in any manner, directly or indirectly, sought by agreement, communication, or conference with anyone to fix the bid price of the Bidder or any other Bidder, or to fix any overhead, profit, or cost element of the bid price, or of that of any other Bidder. All statements contained in the bid are true. The Bidder has not, directly or indirectly, submitted his or her bid price or any breakdown thereof, or the contents thereof, or divulged information or data relative thereto, to any corporation, partnership, company, association, organization, bid depository, or to any member or agent thereof, to effectuate a collusive or sham bid, and has not paid, and will not pay, any person or entity for such purpose.

Any person executing this declaration on behalf of a Bidder that is a corporation, partnership, joint venture, limited liability company, limited liability partnership, or any other entity, hereby represents that he or she has full power to execute, and does execute, this declaration on behalf of the Bidder.

I declare under penalty of perjury under the laws of the State of California that the foregoing is true and correct and that this declaration is executed on _____ [date], at _____ [city], _____ [state].

_____
(Signature of Declarant)

FOR COUNCIL ONLY NOT FOR CONSTRUCTION

DISQUALIFICATION QUESTIONNAIRE

The Bidder shall complete, under the penalty of perjury, the following questionnaire:

Has the Bidder, any officer of the Bidder, or any employee of the Bidder who has proprietary interest in the Bidder, ever been disqualified, removed, or otherwise prevented from bidding on, or completing a federal, state, or local government project because of a violation of law or a safety regulation?

Yes_____ No_____

If the answer is yes, explain the circumstances in the following space.

_____

_____

_____

_____

_____

_____

FOR COUNCIL ONLY NOT FOR CONSTRUCTION

NAME OF BIDDER: _____

SIGNATURE OF BIDDER: _____

TITLE OF BIDDER: _____

DATE: _____

ACKNOWLEDGEMENT OF INSURANCE AND BOND REQUIREMENTS

Included in the Bid Price is full compensation for the requirements set forth in the INSURANCE BROKER INFORMATION PACKET of the Project Manual.

NAME OF BIDDER: _____

SIGNATURE OF BIDDER: _____

TITLE OF BIDDER: _____

DATE: _____

FOR COUNCIL ONLY NOT FOR CONSTRUCTION

DISCLAIMER OF WARRANTIES AND ACCURACY OF DATA

Although soil and site investigation reports have been obtained from sources believed to be reliable, no warranty expressed or implied is made regarding accuracy, adequacy, completeness, legality, reliability or usefulness of any information contained therein. These reports are subject to change at any time, may be incomplete, and/or may contain errors. This information is provided for informational purposes only. The City of Roseville provides this information on an "as is" basis. Warranties of any kind, express or implied, or statutory, including but not limited to the implied warranties of merchantability, and fitness for a particular purpose ARE DISCLAIMED to any party viewing these documents or to any third party.

The City of Roseville does not accept and expressly disclaims liability to any party viewing such information, or to any third party whatsoever, for any loss, damage, or injury (including incidental or consequential damages) whether such loss, damage, or injury is the result of negligence, willful or intentional misconduct, or any other cause.

I have read and acknowledged the above disclaimer and agree to hold harmless the City of Roseville on any theory of liability for any loss, damage or injury whether in contract, strict liability or tort arising in any way out of the use or contents of the released information or documents described above or the performance of the work called for herein.

FOR COUNCIL ONLY NOT FOR CONSTRUCTION

Print Name	Signature
Name of Business/Company/Corporation	Date
Address	Phone

END OF PROPOSAL

FOR COUNCIL ONLY NOT FOR CONSTRUCTION

A G R E E M E N T

THIS AGREEMENT, is made and entered into this _____ day of _____, 20_____, by and between the City of Roseville, a municipal corporation, ("CITY"), and _____, a _____, ("CONTRACTOR"); and

W I T N E S E T H:

WHEREAS, the City Council of the CITY, at a meeting held on the ____day of _____, 20_____, approved plans and specifications for the _____

and directed the City Clerk to advertise for sealed proposals for doing said work and providing that bids be submitted on the _____ day of _____, 20_____; and

WHEREAS, the City Clerk, thereafter duly and regularly caused a notice to be published in the manner and for the time prescribed by law; and

WHEREAS, CONTRACTOR, pursuant to the provisions of said notice duly filed a bid with the City Clerk, a true copy of which bid is now on file in the office of the City Clerk, and is hereby referred to and by this reference made a part hereof as fully as if set forth at length herein; and

WHEREAS, all bids received pursuant to said notice were opened and examined and publicly declared at the time specified in said advertisement for bids and at a meeting of the City Council held on the _____ day of _____, 20_____, the Council found and

FOR COUNCIL ONLY NOT FOR CONSTRUCTION

declared the bid of CONTRACTOR to be the lowest responsible bid and thereupon awarded a contract to CONTRACTOR to do the work referred to in the aforementioned specifications.

NOW, THEREFORE, the parties agree as follows:

1. THE WORK. CONTRACTOR agrees:

a. To do the work and furnish all the labor, materials, tools, supplies, equipment, superintendence, insurance, and bonds required for the _____

_____

in accordance with the Contract Documents (the Work).

b. To do and perform the Work contemplated hereby in a good and workmanlike manner under the direction of and to the satisfaction of the Director of Public Works of the City of Roseville.

2. PAYMENT. CITY shall pay CONTRACTOR _____

_____ dollars ($_____) for the Work to be done under this Agreement in accordance with the Contract Documents.

3. CONTRACT DOCUMENTS. The complete Agreement between the parties hereto consists of the following documents:

a. The advertisement for bids (including the notice to bidders, instructions to bidders and proposals);

b. The accepted bid;

c. Plans and specifications (including general conditions, supplemental conditions, special provisions and construction details);

d. Bonds and insurance required by the specifications; and

FOR COUNCIL ONLY NOT FOR CONSTRUCTION

e. This contract.

All documents specified above are intended to operate so that any work called for in any one and not mentioned in the other, or vice versa, is to be executed the same as if mentioned in all said documents.

4. LIQUIDATED DAMAGES. In the event CONTRACTOR does not complete the Work within the time specified, CONTRACTOR agrees that CITY will suffer damages. Inasmuch as the actual damages which would result from such breach by CONTRACTOR under this Agreement are uncertain, and would be impractical or extremely difficult to fix, CONTRACTOR agrees that it shall pay, or CITY shall deduct from CONTRACTOR's fee, the amount of $_____ per day as liquidated damages, in the event of such delay.

5. TIME OF COMPLETION. Time is of the essence of this Agreement. CONTRACTOR shall complete all Work under the Contract Documents within _____ Days of the date of this Contract. CONTRACTOR shall begin work by the date specified in the "Notice to Proceed" letter and shall diligently prosecute all of the Work under this Contract in all parts and requirements as defined in the Contract Documents.

6. SERVICE OF NOTICE. Any notice required or permitted to be given under this Agreement shall be deemed given when (a) personally delivered to the recipient identified below; (b) mailed by registered or certified mail, return receipt requested, postage pre-paid, to the address specified below; or (c) sent by facsimile, with confirmation of receipt, to the facsimile number identified below.

FOR COUNCIL ONLY NOT FOR CONSTRUCTION

CITY OF ROSEVILLE	CONTRACTOR
_____	_____
_____	_____
_____	_____
_____	_____

CITY may also act through either its architect or construction manager if CITY expressly gives notice to CONTRACTOR, in writing, that CITY's designee has authority to act for CITY in a specific capacity.

7. DISPUTES. Disputes arising from this Agreement will be determined in accordance with the Contract Documents and Public Contract Code Sections 10240-10240.13.

8. GOVERNING LAW. This Agreement shall be governed by and construed in accordance with the laws of the State of California.

9. INDEPENDENT CONTRACTOR. CONTRACTOR shall act as an independent contractor, and covenants and agrees that it will conduct itself consistent with such status, that it will neither hold itself out as, nor claim to be, an officer or employee of CITY by reason of this Agreement.

10. SUCCESSORS IN INTEREST. This Agreement shall be binding upon the heirs, successors, executors, administrators and assigns of the respective parties hereto.

11. MODIFICATION. This Agreement and each provision contained herein may be waived, amended, supplemented or eliminated only by mutual written agreement of the parties.

12. SEVERABILITY. If any of the provisions contained in this Agreement are for any reason held invalid or unenforceable, such holding shall not affect the remaining provisions or the validity and enforceability of the Agreement as a whole.

13. INTEGRATED AGREEMENT. This is an integrated agreement and contains all of the terms, considerations, understanding and promises of the parties. It shall be read as a whole.

14. CONTRACTORS LICENSE LAW. CONTRACTORS ARE REQUIRED BY LAW TO BE LICENSED AND REGULATED BY THE CONTRACTORS' STATE LICENSE

FOR COUNCIL ONLY NOT FOR CONSTRUCTION

BOARD WHICH HAS JURISDICTION TO INVESTIGATE COMPLAINTS AGAINST CONTRACTORS IF A COMPLAINT REGARDING A PATENT ACT OR OMISSION IS FILED WITHIN FOUR (4) YEARS OF THE DATE OF THE ALLEGED VIOLATION. A COMPLAINT REGARDING A LATENT ACT OR OMISISON PERTAINING TO STRUCUTRAL DEFECTS MUST BE FILED WITHIN TEN (10) YEARS OF THE DATE OF THE ALLEGED VIOLATION. ANY QUESTIONS CONCERNING A CONTRACTOR MAY BE REFERRED TO THE REGISTRAR, CONTRACTORS' STATE LICENSE BOARD, P.O. BOX 26000, SACRAMENTO, CALIFORNIA 95826.

IN WITNESS WHEREOF, the City of Roseville, a municipal corporation, has authorized the execution of this Agreement in duplicate by its City Manager and attestation by its City Clerk under authority of Resolution No. _____, adopted by the Council of the City of Roseville on the ____day of _____, 20_____, and CONTRACTOR has caused this Agreement to be duly executed.

FOR COUNCIL ONLY NOT FOR CONSTRUCTION

CITY OF ROSEVILLE, a municipal corporation

BY:_____
DOMINICK CASEY
City Manager

ATTEST:

BY:_____
CARMEN AVALOS
City Clerk

_____, a
_____

BY: _____
its: _____

and

BY: _____
its: _____

APPROVED AS TO FORM:

BY: _____
MICHELLE SHEIDENBERGER
City Attorney

APPROVED AS TO SUBSTANCE:

BY: _____

Print Name:_____

Title:_____

FOR COUNCIL ONLY NOT FOR CONSTRUCTION

INSURANCE BROKER INFORMATION PACKET

Project:_____

NOTICE TO CONTRACTOR:

For your convenience, this package contains the Requirements for Insurance and Bonds for this project, including the necessary City forms. You are required to return these forms in addition to the executed Contract within fifteen (15) calendar days after the award of the Bid, unless otherwise directed by City in writing. (See the Instructions to Bidders.)

Please insert the dollar amount of your accepted Bid into the blank on page INS-1 and present this entire package to your insurance broker if you are awarded the Bid.

FOR COUNCIL ONLY NOT FOR CONSTRUCTION

TABLE OF CONTENTS

	Page
Notice to Insurance Broker	INS 1
Insurance Requirements	INS 2
Public Works Faithful Performance Bond	INS 10
Public Works Payment Bond	INS 13

FOR COUNCIL ONLY NOT FOR CONSTRUCTION

NOTICE TO INSURANCE BROKER

Your client has been awarded a bid by the City Council of the City of Roseville to perform a public works project known as _____. The Contract Conditions for that project require your client ("the Contractor") to return certain evidence of insurance and bonds to the City Attorney of the City within fifteen (15) days after the Bid award, unless otherwise directed by the City in writing, or else the Bid award may be terminated and awarded to another company.

This package contains the information you will need as an insurance broker to provide the appropriate insurance and bonds to the City. The insurance coverages the Contractor needs are specified in the section entitled "Insurance Requirements." Please note that, in addition to the insurance certificate itself, copies of several endorsements must be actually furnished.

Please refer to the Supplemental Conditions for modifications of the General Conditions, if any, and the requirements of this insurance packet.

Please use the standard City of Roseville Bond Forms provided in this package.

The Bonds required must each be in the penal amount of: $_____.

Bonds must be sent to the following staff person:

_____

_____

_____

Insurance documents must be provided using one of the following methods:

a. By email to roseville@ebix.com

b. By fax to (770) 335-5727

After using one of these methods, please **DO NOT** also send the insurance certificate(s) by mail.

c. Or mail the documents to

City of Roseville
Insurance Compliance
P.O. Box 100085-R1
Duluth, GA 30096

FOR COUNCIL ONLY NOT FOR CONSTRUCTION

When forwarding the documents, please refer to the project name so that the documents can be matched with the Contract for which they are submitted.

Thank you.

FOR COUNCIL ONLY NOT FOR CONSTRUCTION

INSURANCE REQUIREMENTS

The following sections are quoted from the General Conditions:

5-1.23 **INSURANCE COVERAGE.**

A. Evidence of Maintenance Required. The Contractor shall, at its expense, procure and at all times maintain in full force and effect at a minimum the insurance required by this section on all of its operations; and the Contractor shall not allow any Subcontractor to commence work until similar insurance required of the Subcontractor has been obtained and filed. An original Certificate of Insurance, and copies of all required endorsements, all in a form approved by the Risk Manager, evidencing all required coverage or policies shall be filed after the award of the bid and prior to approval of the Contract by the City Council. Contractor shall provide ten (10) days prior written notice to the City of any reduction of coverage limits or cancellation of the coverage or policies shall be given to the City of Roseville as Certificate holder.

B. Qualifying Insurers. With the exception of the State Compensation Insurance Fund, all required insurance policies shall be issued by companies acceptable to the City and licensed to do business in the State of California and who hold a current policy holders alphabetic and financial size category rating of not less than AVII according to the most recent issue of Best's Insurance Reports.

C. Insurance Required.

1. **Commercial General Liability (CGL):** Insurance Services Office Form CG 00 01 covering CGL on an "occurrence" basis, including products and completed operations with limits of no less than Two Million Dollars ($2,000,000) per occurrence for bodily injury, personal injury and property damage for projects under One Million Dollars ($1,000,000) and

FOR COUNCIL ONLY NOT FOR CONSTRUCTION

limits of no less than Five Million Dollars ($5,000,000) per occurrence for bodily injury, personal injury and property damage for projects over One Million Dollars ($1,000,000). If a general aggregate limit applies, either the aggregate limit shall apply separately to this project or the general aggregate limit shall be twice the required occurrence limit.

The Commercial General Liability insurance shall include the following, copies of which shall be provided:

a. Inclusion of the City of Roseville, and its officers, agents, employees, and volunteers, as additional insureds (except for workers' compensation) as respects services or operations under the Contract. The additional insured endorsement for the general liability policy shall be at least as broad as the ISO CG 2010 10 01 combined with ISO CGL Endorsement CG 2037 10 01. Any other endorsement must be approved in writing by the City. Endorsements must include coverage for on-going and completed operations, which coverage shall be maintained for four (4) years following completion of the Project. Endorsements shall cover the City of Roseville, its officers, agents, employees, and volunteers.

b. The insurance shall provide coverage for claims by one insured against another insured and the policies shall not contain any cross-suits exclusions, cross-liability exclusions, or insured versus insured exclusions. The policies shall not contain any classification exclusions purporting to deny coverage for any work to be performed by Contractor or any of its Subcontractors.

c. Stipulation that the insurance is primary and noncontributory, as evidenced by a separate endorsement (CG 20 01 04 13 or an equivalent) or section of the policy, and that neither the City nor its insurers will be called upon to contribute to a loss.

d. Such insurance shall specifically cover the contractual liability of

FOR COUNCIL ONLY NOT FOR CONSTRUCTION

the Contractor.

e. Any available insurance proceeds in excess of the specified minimum insurance coverage requirements and limits shall be available to the additional insureds. Furthermore, the requirements for coverage and limits shall be: (1) the minimum coverage and limits specified in this Agreement; or (2) the full coverage and maximum limits of any insurance proceeds available to the named insureds, whichever is greater.

f. Waiver of subrogation endorsement.

g. The Contractor shall furnish a certificate for the period covered.

2. **Automobile Liability:** Insurance Services Office Form Number CA 0001 covering Code 1 (any auto), or if Contractor has no owned autos, Code 8 (hired) and Code 9 (non-owned), with limits of no less than One Million Dollars ($1,000,000) per accident for bodily injury and property damage.

3. **Workers' Compensation:** In accordance with the provisions of the California Labor Code, Contractor is required to be insured against liability for Workers' Compensation or to undertake self-insurance. Statutory Workers' Compensation and Employers' Liability of at least One Million Dollars ($1,000,000) shall cover all Contractors staff while performing any work incidental to the performance or this Agreement.

4. **Professional Liability:** Professional Liability (Errors and Omission) Insurance appropriate to Contractor's profession, with a limit of liability not less than One Million Dollars ($1,000,000) per occurrence or claim and Two Million Dollars ($2,000,000) aggregate to cover all design and engineering services rendered by Contractor pursuant to the Agreement. Coverage must commence from the first day that Contractor or any of its Subcontractors provided any design or engineering services in connection with the Project.

FOR COUNCIL ONLY NOT FOR CONSTRUCTION

5. **Builder's Risk/Course of Construction Insurance Is ____ OR Is Not _X_ Required by Risk Management:** The Contractor shall be responsible for all loss, damage or destruction whatsoever to the work called for by this Contract until the approval of a Notice of Completion or acceptance of the Work if no Notice of Completion is to be recorded.

The Contractor shall secure "All Risk" type of builder's Risk Insurance of the type covering one hundred percent (100%) of the value of the work performed under this Contract (the value is presumed to be the Contract amount unless otherwise stated in Supplemental Conditions) and all materials, equipment, or other items to be incorporated therein while the same are located at the construction site, a bonded warehouse, or its place of manufacture. At any time, the policy shall cover the value of the work completed. The policy shall cover hazards including the losses due to fire, explosion, hail, rain, lightning, flood (separate insurance as needed), vandalism, malicious mischief, wind, collapse, aircraft, and smoke.

The policies providing such insurance shall name the City as a loss payee as its respective interests may appear, and certified copies of such policies shall be filed with the City. The maximum deductible allowable under the Builder's All Risk policy shall be five percent (5%) of the Contract amount.

Builder's Risk Insurance is not required for coverage of losses in excess of five percent (5%) of the Contract amount for damages resulting from earthquake in excess of a magnitude of 3.5 on the Richter scale, or tidal waves. Coverage in the amount of five percent (5%) of the Contract amount for such losses is required.

6. **Pollution Coverage:** Contractor shall procure pollution liability coverage or other insurance covering claims for bodily injury or property damage arising out of the abatement, removal, storage, transportation, or other exposure to hazardous materials or

FOR COUNCIL ONLY NOT FOR CONSTRUCTION

pollutants, in limits not less than Two Million Dollars ($2,000,000). Contractor shall add the City and all parties required to be indemnified by Contractor as additional insured on all pollution liability policies. X POLLUTION COVERAGE IS NOT REQUIRED ON THIS PROJECT

7. **Higher Coverage Limits:** If Contractor maintains higher coverage limits than the amounts shown above, then the City requires and shall be entitled to coverage for the higher coverage limits maintained by Contractor. Any available insurance proceeds in excess of the specified minimum limits of insurance and coverage shall be available to the City.

8. **Claims Made Coverage:** Liability insurance coverage may not be written on a "claims made" or modified occurrence basis. The Certificate of Insurance must clearly provide that the coverage is on an "occurrence" basis.

5-1.24 **OTHER INSURANCE PROVISIONS.**

A. The requirements of the Standard Specifications as to types and limits of insurance coverage to be maintained by the Contractor, and any approval of insurance by the City, are not intended to, and shall not in any manner limit or qualify the liabilities and obligations otherwise assumed by the Contractor pursuant to the Contract, including, but not limited to, the provisions concerning indemnification, nor preclude the City from taking any other action available to it under any other provision of the Contract or law.

B. The City acknowledges that some insurance requirements contained in these Standard Specifications may be fulfilled by self-insurance on the part of the Contractor. However, this shall not in any way limit liabilities assumed by Contractor under the Contract. Any self-insurance must be approved in writing by the City, in its sole discretion and shall not reduce the limits of liability. Any deductibles or self-insured retentions ("SIR") must be declared on the certificate of insurance and approved by City in writing. Policies containing any

FOR COUNCIL ONLY NOT FOR CONSTRUCTION

SIR provision shall provide or be endorsed to provide that the SIR may be satisfied by either the named insured or City. City reserves the right to obtain a full certified copy of any insurance policy and endorsements. The failure to exercise this right shall not constitute a waiver of such right.

C. The Contractor agrees to include in its contracts with all subcontractors the same requirements and provisions of this Contract, including the indemnity and insurance requirements, to the extent they apply to the scope of the subcontractor's work. Furthermore, the Contractor shall require its subcontractors to agree to be bound to the Contractor and the City in the same manner and to the same extent as the Contractor is bound to the City under this Contract. Additionally, the Contractor shall obligate its subcontractors to comply with these same provisions with respect to any tertiary subcontractor, regardless of tier. A copy of the City's indemnity and insurance provisions will be furnished to the subcontractor or tertiary subcontractor upon request. Alternatively, the Contractor may insure subcontractor(s) under its own policy.

D. The City, its officers, agents, employees, and volunteers are to be covered as insureds with respect to liability arising out of automobiles owned, leased, hired or borrowed by or on behalf of the Contractor; and with respect to liability arising out of work or operations performed by or on behalf of the Contractor including materials, parts or equipment furnished in connection with such work or operations. Coverage shall not extend to any indemnity coverage for the active negligence of the additional insured in any case where an agreement to indemnify the additional insured would be invalid under California Insurance Code Section 11580.04.

E. The limits of insurance required in this Contract may be satisfied by a combination of primary and excess insurance. Any excess insurance shall contain or be

FOR COUNCIL ONLY NOT FOR CONSTRUCTION

endorsed to contain a provision that such coverage shall also apply on a primary and noncontributory basis for the benefit of the City (if agreed to in a written contract) before the City's own insurance shall be called upon to protect it as a named insured.

F. The insurance procured by Contractor shall be subject to the approval of the City, but any acceptance of insurance certificates by the City shall in no way limit or relieve Contractor of its duties and responsibilities under the Agreement.

G. Contractor shall be responsible for all premiums, deductibles, and self-insured retention applicable to the insurance it is required to procure under the Contract. All deductibles or self-insured retentions over five hundred thousand dollars ($500,000) must be approved by the City, in writing. Contractor shall be responsible for all deductibles, self-insured retention payments, and/or increased premiums incurred if the City's policies of insurance are forced to cover damages or respond to claims for which Contractor or its Subcontractors were obligated to provide insurance under the Contract.

H. Failure of the City to enforce in a timely manner any of the requirements of these insurance provisions shall not act as a waiver to enforcement of any of these provisions at a later date.

I. Contractor's indemnity obligations shall not be limited by these insurance provisions and shall survive the expiration of the Contract and the insurance provisions of the Contract shall likewise not be limited by the indemnity provisions of the Contract.

J. THE CITY RESERVES THE RIGHT TO WITHHOLD ANY PROGRESS PAYMENTS TO THE CONTRACTOR IN THE EVENT OF NONCOMPLIANCE WITH ANY INSURANCE REQUIREMENTS.

FOR COUNCIL ONLY NOT FOR CONSTRUCTION

Bond No. _____
Premium $_____

PUBLIC WORKS
FAITHFUL PERFORMANCE BOND

(Project: _____)

WHEREAS, the City of Roseville ("CITY") has awarded a bid and contract to _____ as contractor ("PRINCIPAL") for the public work described as _____ _____ (the "WORK"). The contract ("AGREEMENT"), for the public work described above, and all of its terms and conditions are incorporated by reference and made a part hereof; and

WHEREAS, the PRINCIPAL is required to furnish a bond in connection with the AGREEMENT guaranteeing its faithful performance; and

NOW, THEREFORE, we the undersigned PRINCIPAL and _____ _____, a _____, admitted and duly authorized to transact business under the laws of the State of California, as SURETY ("SURETY"), are held and firmly bound unto the CITY or its successors and assigns in the sum of _____ dollars ($_____) (which amount is not less than 100% of the AGREEMENT price) to be paid to the CITY or its successors and assigns; and for which payment, well and truly to be made, we bind ourselves, our heirs, executors and administrators, successors or assigns jointly and severally, firmly by these presents.

The condition of this obligation is such that if the PRINCIPAL, or its heirs, executors, administrators, successors or assigns, shall abide by, and in all respects promptly and faithfully perform the covenants, conditions and provisions in said AGREEMENT and any alteration thereof made as therein provided, notice of which alterations to Surety being hereby waived, on its part to be kept and performed at the time and in the manner therein specified, and in all respects according to their true intent and meaning, and shall indemnify and save harmless CITY, its officers, agents, employees, volunteers as therein stipulated, then this obligation shall be null and void; otherwise, this obligation shall be and remain in full force and effect.

As condition precedent to the satisfactory completion of the contract, the obligation of the PRINCIPAL and SURETY under this Bond shall remain in effect for a period of one (1) year after the completion and acceptance of the WORK. During that time, if the PRINCIPAL, its heirs, executors, administrators, successors or assigns fails to make full, complete and satisfactory repair and replacement or totally protect the CITY from any loss or damage made evident during that year which results from or is caused by either defective materials or faulty workmanship in the prosecution of the WORK, then the obligation shall remain in full force and effect. However, anything in

FOR COUNCIL ONLY NOT FOR CONSTRUCTION

this paragraph to the contrary notwithstanding, the obligation of the SURETY shall continue so long as any obligation of the PRINCIPAL remains.

No prepayment or delay in payments, and no change, extension, addition or alteration of any provision of the AGREEMENT or in the specifications agreed to between the PRINCIPAL and the CITY, or any forbearance on the part of the CITY shall operate to relieve the SURETY. The SURETY hereby waives the provisions of Section 2819 of the California Civil Code. The SURETY waives all rights of subrogation against the CITY or any person employed by the CITY. If the contract price increases by the issuance of change orders, the amount specified in this bond shall increase by the same amount.

Whenever PRINCIPAL shall be and declared by CITY to be in default under the AGREEMENT, SURETY shall promptly remedy the default, or shall promptly do one of the follow at CITY's election:

1. Undertake through its agents or independent contractors, reasonably acceptable to CITY, to complete the AGREEMENT in accordance with its terms and conditions and to pay and perform all obligations of PRINCIPAL under the AGREEMENT, including without limitation, all obligations with respect to warranties, guarantees, and the payment of liquidated damages.

2. Reimburse CITY for all costs CITY incurs in completing the AGREEMENT, and in correcting, repairing or replacing defects in materials or workmanship and/or materials and workmanship which do not conform to the specifications in the AGREEMENT.

SURETY's obligations hereunder are independent of the obligations of any other surety for the performance of the AGREEMENT, and suit may be brought against SURETY and such other sureties, jointly and severally, or against any one or more of them, or against less than all of them without impairing CITY's rights against the others.

No right of action shall accrue on this bond to or for the use of any person or corporation other than CITY or its successors or assigns.

As part of the obligation secured hereby and in addition to the face amount specified therefore, there shall be included costs and reasonable expenses and fees, including reasonable attorneys' fees, incurred by CITY in successfully enforcing such obligation, all to be taxed as costs and included in any judgment rendered.

[SIGNATURES NEXT PAGE]

FOR COUNCIL ONLY NOT FOR CONSTRUCTION

IN WITNESS WHEREOF, this instrument has been duly executed by the PRINCIPAL and SURETY above-named, on the ____ day of _____, 20___.

PRINCIPAL:

BY:_____

PRINT NAME: _____

PRINT TITLE: _____

AND

BY: _____

PRINT NAME: _____

PRINT TITLE:_____

SURETY:

BY:_____

PRINT NAME: _____

PRINT TITLE:_____

MAILING ADDRESS:

_____

_____

_____

(Notarization by Surety and copy of Power of Attorney required.)

APPROVED AS TO FORM:

BY: _____
City Attorney

FOR COUNCIL ONLY NOT FOR CONSTRUCTION

Bond No. _____
Premium $_____

PUBLIC WORKS
LABOR AND MATERIALS PAYMENT BOND
(Project: _____)

WHEREAS, the City of Roseville ("CITY"), has awarded a bid and contract to _____ as contractor ("PRINCIPAL"), for the public work described as _____ _____ (the "WORK"). The contract ("AGREEMENT"), for the public work described above, and all of its terms and conditions are incorporated by reference and made a part hereof; and

WHEREAS, the PRINCIPAL is required to furnish a bond in connection with the AGREEMENT guaranteeing payment of persons who provide labor and material; and

NOW, THEREFORE, we the undersigned PRINCIPAL and _____ _____, a _____, admitted and duly authorized to transact business under the laws of the State of California, as SURETY ("SURETY"), are held and firmly bound unto the CITY or its successors and assigns in the sum of _____ dollars ($_____) (which amount is not less than 100% of the AGREEMENT price) to be paid to the CITY or its successors and assigns; and for which payment, well and truly to be made, we bind ourselves, our heirs, executors and administrators, successors or assigns jointly and severally, firmly by these presents.

The condition of the obligation is such that if the PRINCIPAL, its subcontractors, heirs, executors, administrators, successors or assigns fails to pay any of the persons named in Section 8004 or 9100 of the Civil Code of the State of California, or the amounts due under the Unemployment Insurance Code of the State of California, or any amounts required to be deducted, withheld and paid over to the Employment Development Department from the wages of employees of the PRINCIPAL and its subcontractors pursuant to Section 13020 of the Unemployment Insurance Code, with respect to work or labor performed by any such claimant, that the SURETY will pay for the same, in an amount not exceeding the sum specified in this bond, and also, in case suit is brought upon the bond, shall pay reasonable attorneys' fees, to be fixed by the Court.

This bond shall inure to the benefit of any and all persons, companies, and corporations entitled to file a Stop Payment Notice pursuant to the provisions of Section 9350 et seq. of the Civil Code of the State of California, so as to give a right of action to them or their assigns in any suit brought upon this bond.

FOR COUNCIL ONLY NOT FOR CONSTRUCTION

No prepayment or delay in payments, and no change, extension, addition or alteration of any provision of the AGREEMENT or in the specifications agreed to between the PRINCIPAL and the CITY, or any forbearance on the part of the CITY shall operate to relieve the SURETY. The SURETY hereby waives the provisions of Section 2819 of the California Civil Code. The SURETY waives all rights of subrogation against the CITY or any person employed by the CITY. If the contract price increases by the issuance of change orders, the amount specified in this bond shall increase by the same amount.

As part of the obligation secured hereby and in addition to the face amount specified therefore, there shall be included costs and reasonable expenses and fees, including reasonable attorneys' fees, incurred by CITY in successfully enforcing such obligation, all to be taxed as costs and included in any judgment rendered.

IN WITNESS WHEREOF, this instrument has been duly executed by the PRINCIPAL and SURETY above-named, on the _____ day of _____, 20__.

PRINCIPAL:

BY:_____

PRINT NAME: _____

PRINT TITLE: _____

AND

BY: _____

PRINT NAME: _____

PRINT TITLE: _____

SURETY:

BY:_____

PRINT NAME: _____

PRINT TITLE:_____

MAILING ADDRESS:

_____

_____

_____

(Notarization by Surety and copy of Power of Attorney required.)

APPROVED AS TO FORM:

BY: _____
City Attorney

FOR COUNCIL ONLY NOT FOR CONSTRUCTION

CITY OF ROSEVILLE

GENERAL CONDITIONS

FOR

BUILDINGS AND GROUNDS

FOR COUNCIL ONLY NOT FOR CONSTRUCTION

CITY OF ROSEVILLE
GENERAL CONDITIONS
FOR
BUILDINGS AND GROUNDS

SECTION 1: DEFINITIONS AND TERMS GC-1:1

1-1.01	GENERAL	GC-1:1
1-1.02	ACCEPTANCE	GC-1:1
1-1.03	ADDENDUM	GC-1:1
1-1.04	AS-BUILT DOCUMENTS, AS-BUILT DRAWINGS AND RECORD DOCUMENTS	GC-1:1
1-1.05	ASSESSMENT	GC-1:1
1-1.06	BENEFICIAL OCCUPANCY	GC-1:2
1-1.07	BID GUARANTY	GC-1:2
1-1.08	BIDDER	GC-1:2
1-1.09	BIDDING DOCUMENTS	GC-1:2
1-1.10	CHANGE ORDER	GC-1:2
1-1.11	CITY	GC-1:2
1-1.12	CITY ATTORNEY	GC-1:2
1-1.13	CITY CLERK	GC-1:2
1-1.14	CLAIM	GC-1:2
1-1.15	CONSTRUCTION SCHEDULE	GC-1:3
1-1.16	CONTRACT OR AGREEMENT	GC-1:3
1-1.17	CONTRACT CONDITIONS	GC-1:3
1-1.18	CONTRACT DOCUMENTS	GC-1:3
1-1.19	CONTRACT DRAWINGS	GC-1:3
1-1.20	CONTRACT PRICE	GC-1:4
1-1.21	CONTRACT TIME	GC-1:4
1-1.22	CONTRACTOR	GC-1:4
1-1.23	DAY OR DAYS	GC-1:4
1-1.24	DEPARTMENT	GC-1:4
1-1.25	DIRECT COSTS	GC-1:4
1-1-26	DIRECTOR.	GC-1:6
1-1.27	EMERGENCY.	GC-1:6
1-1.28	ENGINEER OR ARCHITECT	GC-1:7
1-1.29	FINAL COMPLETION	GC-1:7
1-1.30	FORCE ACCOUNT	GC-1:7
1-1.31	GENERAL NOTES	GC-1:7
1-1.32	INSTALLATION, INSTALL	GC-1:7
1-1.33	LABORATORY	GC-1:7
1-1.34	LEGAL HOLIDAYS	GC-1:7
1-1.35	LIQUIDATED DAMAGES	GC-1:7
1-1.36	NOTICE OF COMPLETION	GC-1:8
1-1.37	NOTICE TO PROCEED	GC-1:8
1-1.38	NOTICE OF TERMINATION	GC-1:8

FOR COUNCIL ONLY NOT FOR CONSTRUCTION

1-1.39 OVERHEAD....GC-1:8
1-1.40 PREMISES....GC-1:9
1-1.41 PROFESSIONAL ENGINEER....GC-1:9
1-1.42 PROJECT MANUAL....GC-1:9
1-1.43 PROPOSAL FORMS....GC-1:9
1-1.44 REQUEST FOR INFORMATION (RFI)....GC-1:9
1-1.45 SAFETY....GC-1:9
1-1.46 SCHEDULE OF VALUES....GC-1:9
1-1.47 SHOP DRAWINGS....GC-1:10
1-1.48 SPECIFICATIONS....GC-1:10
1-1.49 SUBCONTRACTOR....GC-1:10
1-1.50 SUBMITTALS....GC-1:10
1-1.51 SUPPLEMENTAL CONDITIONS....GC-1:10
1-1.52 SUPPLIER....GC-1:10
1-1.53 WORK....GC-1:11
1-1.54 WORK SITE....GC-1:11
1-1.55 WORKING DRAWINGS....GC-1:11

SECTION 2: CONTROL AND SCOPE OF THE WORK....GC-2:1

2-1.01 AUTHORITY OF DIRECTOR....GC-2:1
2-1.02 INTENT OF CONTRACT DOCUMENTS....GC-2:1
2-1.03 EXAMINATION AND VERIFICATION OF CONTRACT DOCUMENTS....GC-2:2
2-1.04 CONTRACT DRAWINGS....GC-2:3
2-1.05 COORDINATION AND INTERPRETATION OF CONTRACT DOCUMENTS....GC-2:3
2-1.06 INDEPENDENT CONTRACTOR STATUS....GC-2:5
2-1.07 ORDER OF WORK....GC-2:5
2-1.08 SUBMITTALS....GC-2:5
2-1.08A SHOP DRAWINGS....GC-2:6
2-1.08B DESCRIPTIVE DATA....GC-2:7
2-1.08C SAMPLES....GC-2:7
2-1.08D MANUALS, INSTRUCTIONS AND AFFIDAVIT....GC-2:7
2-1.08E ALTERNATIVES....GC-2:10
2-1.09 DISPOSAL OF MATERIAL OUTSIDE THE WORK SITE....GC-2:12
2-1.10 ACCESS TO THE WORK....GC-2:12
2-1.11 TEMPORARY UTILITIES....GC-2:12
2-1.12 UTILITY FACILITIES....GC-2:13
2-1.13 PRESERVATION AND CLEANING....GC-2:14
2-1.14 LIMITATIONS ON WORK SITE AND PREMISES....GC-2:14
2-1.15 DUST CONTROL....GC-2:15
2-1.16 SANITATION....GC-2:15
2-1.17 NIGHT WORK AND NORMAL WORKING HOURS....GC-2:15
2-1.18 LINES AND GRADES....GC-2:16
2-1.19 ARCHEOLOGICAL DISCOVERIES....GC-2:17
2-1.20 PRESERVATION OF MONUMENTS....GC-2:17
2-1.21 CONFORMITY WITH CONTRACT DOCUMENTS....GC-2:18

FOR COUNCIL ONLY NOT FOR CONSTRUCTION

2-1.22 FINAL CLEANUP GC-2:18
2-1.23 AS-BUILT DOCUMENTS AND DRAWINGS GC-2:18
2-1.24 SUPERINTENDENCE GC-2:19
2-1.25 CHARACTER OF WORKER GC-2:20
2-1.26 INSPECTION GC-2:20
2-1.27 REMOVAL OF REJECTED AND UNAUTHORIZED WORK GC-2:21

SECTION 3: CHANGES IN THE WORK GC-3:1

3-1.01 CHANGES GC-3:1
3-1.02 PROPOSED CHANGE ORDERS GC-3:2
3-1.03 EMERGENCY AND INDETERMINATE TYPE CHANGE ORDERS GC-3:3
3-1.04 EXECUTED CHANGE ORDER GC-3:3
3-1.05 CONTRACT PRICE ADJUSTMENT GC-3:3
3-1.06 FORCE ACCOUNT PAYMENT GC-3:5
***3-1.06A LABOR* GC-3:6**
***3-1.06B MATERIALS* GC-3:6**
***3-1.06C EQUIPMENT* GC-3:7**
***3-1.06D MARKUPS* GC-3:8**
***3-1.06E RECORDS* GC-3:9**
3-1.07 COST REDUCTION PROPOSALS GC-3:11

SECTION 4: CONTROL OF MATERIALS GC-4:1

4-1.01 MATERIALS GC-4:1
4-1.02 PRODUCT AND REFERENCE STANDARDS GC-4:2
4-1.03 SAMPLING AND TESTING OF MATERIALS GC-4:2
4-1.04 CERTIFICATES OF COMPLIANCE GC-4:7

SECTION 5: LEGAL RELATIONS AND RESPONSIBILITY GC-5:1

5-1.01 LAWS TO BE OBSERVED GC-5:1
5-1.02 HOURS OF LABOR GC-5:1
5-1.03 NONDISCRIMINATION GC-5:2
5-1.04 PREVAILING WAGE GC-5:3
5-1.05 REGISTRATION REQUIRED AS QUALIFICATION TO BID GC-5:6
5-1.06 PAYROLL RECORDS GC-5:7
5-1.07 SAFETY REQUIREMENTS GC-5:10
5-1.08 SUBSURFACE EXCAVATIONS, NOTIFICATION GC-5:15
5-1.09 PUBLIC SAFETY GC-5:15
5-1.10 EMERGENCIES GC-5:17
5-1.11 APPRENTICES GC-5:18
5-1.12 FAIR LABOR STANDARDS ACT GC-5:18
5-1.13 WORKERS' COMPENSATION GC-5:19
5-1.14 AIR POLLUTION CONTROL AND ASBESTOS GC-5:19
5-1.15 USE OF PESTICIDES GC-5:20
5-1.16 SOUND AND LIGHT CONTROL REQUIREMENTS GC-5:20
5-1.17 WEIGHT LIMITATIONS GC-5:21
5-1.18 ENVIRONMENTAL CLEARANCES; MITIGATION MONITORING PROGRAMS; AND REGULATORY AGENCY PERMIT

FOR COUNCIL ONLY NOT FOR CONSTRUCTION

REQUIREMENTS GC-5:21
5-1.19 PERMITS AND LICENSES GC-5:21
5-1.20 WATER POLLUTION GC-5:22
5-1.21 PROTECTION AND USE OF PROPERTY GC-5:23
5-1.22 RESPONSIBILITY FOR DAMAGE AND INDEMNIFICATION GC-5:24
5-1.23 INSURANCE COVERAGE GC-5:26
5-1.24 OTHER INSURANCE PROVISIONS GC-5:31
5-1.25 THIRD PARTY BENEFICIARY GC-5:33
5-1.26 COORDINATION AND ACCESS GC-5:33
5-1.27 OCCUPANCY BY THE DEPARTMENT PRIOR TO ACCEPTANCE GC-5:34
5-1.28 RIGHT TO OPERATE UNSATISFACTORY FACILITIES AND EQUIPMENT GC-5:35
5-1.29 CONTRACTOR'S RESPONSIBILITY FOR THE WORK GC-5:36
5-1.30 RESPONSIBILITY FOR UTILITIES GC-5:37
5-1.31 PROPERTY RIGHTS IN MATERIALS GC-5:39
5-1.32 COURT ORDERED DELAY GC-5:39
5-1.33 NO PERSONAL LIABILITY GC-5:39
5-1.34 RIGHTS IN LAND AND IMPROVEMENTS GC-5:40
5-1.35 ANTITRUST CLAIMS GC-5:40
5-1.36 RIGHTS TO DRAWINGS, TECHNICAL DATA PATENTS GC-5:40
5-1.37 PAYMENT OF TAXES GC-5:41
5-1.38 GRATUITIES AND CONFLICT OF INTEREST GC-5:42
5-1.39 COOPERATION GC-5:43
5-1.40 DIGGING TRENCHES OR OTHER EXCAVATIONS GC-5:43
5-1.41 CONTRACTOR REGISTRATION GC-5:44
5-1.42 CITY OF ROSEVILLE ENCROACHMENT PERMITS AND RIGHTS-OF-WAY GC-5:45

SECTION 6: PROSECUTION AND PROGRESS GC-6:1

6-1.01 SUBLETTING AND SUBCONTRACTING GC-6:1
6-1.02 ASSIGNMENT GC-6:2
6-1.03 BEGINNING OF WORK GC-6:2
6-1.04 PROGRESS SCHEDULE. GC-6:3
6-1.05 SCHEDULE OF VALUES GC-6:9
6-1.06 CITY'S RIGHT TO STOP WORK GC-6:9
6-1.07 TIME OF COMPLETION GC-6:11
6-1.08 LIQUIDATED DAMAGES GC-6:12
6-1.09 DELAYS AND EXTENSIONS TO THE WORK GC-6:13
6-1.10 TERMINATION GC-6:18
6-1.10A TERMINATION OF AGREEMENT – CONVENIENCE OF CITY GC-6:18
6-1.10B TERMINATION OF AGREEMENT - FOR CAUSE GC-6:21

SECTION 7: ACCEPTANCE AND PAYMENT GC-7:1

7-1.01 ACCEPTANCE GC-7:1
7-1.02 SCOPE OF PAYMENT GC-7:2
7-1.03 NOTICE OF POTENTIAL CLAIM GC-7:2
7-1.04 CLAIMS GC-7:5

FOR COUNCIL ONLY NOT FOR CONSTRUCTION

7-1.05 DISPUTE RESOLUTION PROCEDURE GC-7:6
7-1.06 STOP PAYMENT NOTICES GC-7:7
7-1.07 PROGRESS PAYMENTS GC-7:7
7-1.08 PAYMENT FOR MATERIALS AND EQUIPMENT ON HAND GC-7:9
7-1.09 RETENTION ON PROGRESS PAYMENTS GC-7:11
7-1.10 FINAL PAYMENT GC-7:12
7-1.11 CLERICAL ERRORS GC-7:14
7-1.12 WARRANTY GC-7:14
7-1.13 WARRANTY OF TITLE GC-7:16

FOR COUNCIL ONLY NOT FOR CONSTRUCTION

SECTION 1

DEFINITIONS AND TERMS

1-1.01 **GENERAL.** When the following abbreviations and terms or pronouns in place of them appear in the Contract Documents, the intent and meaning shall be interpreted as provided in this Section 1.

1-1.02 **ACCEPTANCE.** Formal Acceptance by resolution by the Roseville City Council of the Contract when completed in all respects in accordance with the Contract Documents and any modifications previously approved.

1-1.03 **ADDENDUM.** Written interpretation or revision to any of the Contract Documents issued by the City before the bid opening.

1-1.04 **AS-BUILT DOCUMENTS, AS-BUILT DRAWINGS AND RECORD DOCUMENTS.** As-Built Documents, As-Built Drawings and Record Documents are all contract documents modified to reflect changes during the construction phase. Specifically, As-Built Documents/Drawings are a revised set of drawings submitted by the Contractor upon Final Completion of a project. They reflect changes made in the Specifications and Working Drawings during the construction process, and show the exact dimensions, geometry, and location of all elements of the work completed under the Contract. Record Documents, on the other hand, are compiled by the Engineer or Architect based on the As-Built Documents/Drawings submitted by the Contractor. They reflect the Engineer or Architect's concurring review of what changes were denoted, why they were made and where they occurred and create a record set of drawings.

1-1.05 **ASSESSMENT.** A cost imposed on the Contractor for non-compliance

FOR COUNCIL ONLY NOT FOR CONSTRUCTION

with certain contractual requirements.

1-1.06 **BENEFICIAL OCCUPANCY.** The taking possession of a portion of the Work by the City for its use and/or occupancy on other than a temporary or emergency basis.

1-1.07 **BID GUARANTY.** The cashier's, certified check, irrevocable standby letter of credit, deposit of securities, or Bidder's Bond, accompanying the bid submitted by the Bidder, as a guaranty that the Bidder will enter into an agreement with the City for the performance of the Work, if the Agreement is awarded to Bidder, and the Bidder will submit the required Contract Bonds and Certificate of Insurance. Also referred to as the Bidder's Security.

1-1.08 **BIDDER.** Individual, firm, partnership, limited liability company, corporation, joint venture, or any combination thereof, submitting a Proposal for the Work, acting directly, or through a duly authorized representative.

1-1.09 **BIDDING DOCUMENTS.** Includes the Notice to Bidders, Bidding Requirements, Contract Conditions, Drawings, and Addenda.

1-1.10 **CHANGE ORDER.** Any written order to the Contractor directing an addition, deletion, or modification of the Work, or an adjustment in the Contract Price or Contract Time provided in the Contract Documents and issued after the Agreement has been signed.

1-1.11 **CITY.** The City of Roseville.

1-1.12 **CITY ATTORNEY.** The City Attorney of the City.

1-1.13 **CITY CLERK.** The City Clerk of the City.

1-1.14 **CLAIM.** A separate demand by Contractor sent by registered mail or certified mail with return receipt requested, for one or more of the following: (a) a time extension, including, without limitation, for relief for damages or penalties for delay assessed by

FOR COUNCIL ONLY NOT FOR CONSTRUCTION

the City; (b) payment by the City of money or damages arising from work done by, or on behalf of, Contractor pursuant to the Contract Documents and payment for which is not otherwise expressly provided or to which Contractor is not otherwise entitled; and (c) payment of an amount that is disputed by the City.

1-1.15 **CONSTRUCTION SCHEDULE.** A list or graphic display of construction activities required for completing the Work, in a format required by the Contract Documents. The duration, start and finish date, and sequence of significant activities, critical path, float and milestones must be indicated in the Construction Schedule.

1-1.16 **CONTRACT OR AGREEMENT.** The written agreement relating to the Work to be performed, the labor, materials, and equipment to be furnished, and the payment to be made therefor. The Agreement/Contract is part of and incorporates all of the Contract Documents.

1-1.17 **CONTRACT CONDITIONS.** Includes the General Conditions, Supplemental Conditions, and Specifications.

1-1.18 **CONTRACT DOCUMENTS.** Includes those documents that form the basis of the Contract, including but not limited to, Bidding Documents, the Bid or Proposal, Contract Bonds, the Contract, all required insurance certificates or endorsements, all bonds, all required certifications or statements, Change Orders, any Contract Amendment, any City Standard which is incorporated by reference and these City of Roseville General Conditions for Buildings and Grounds.

1-1.19 **CONTRACT DRAWINGS.** The official drawings including plans, elevations, sections, detail drawings, diagrams, plated, General Notes, information and schedules thereon, or exact reproductions thereof, showing the location, character, dimension, and details

FOR COUNCIL ONLY NOT FOR CONSTRUCTION

of the Work. The Contract Drawings include any drawings or plates bound within the Supplemental Conditions.

1-1.20 **CONTRACT PRICE.** The total compensation to be paid to the Contractor in accordance with the terms of the Agreement.

1-1.21 **CONTRACT TIME.** The number of Days, or portion thereof, allowed for completion of the Work, including all authorized time extensions. The effective date for commencement of the Work specified in the Notice to Proceed shall define the beginning of the Contract Time.

1-1.22 **CONTRACTOR.** Individual, firm, partnership, limited liability company, corporation, joint venture, or any combination thereof, who has entered into the Agreement with City.

1-1.23 **DAY OR DAYS.** Unless otherwise designated, Day or Days as used in the Contract Documents will be understood to mean calendar Day or Days.

1-1.24 **DEPARTMENT.** The Department for Contract Administration, as identified in the Supplemental Conditions.

1-1.25 **DIRECT COSTS.** Those cost items (including labor, materials, equipment and any subcontractor's work) that are used in the actual performance of, and are specifically and uniquely attributable to the Work or changed Work. Direct Costs do not include Overhead. Direct Costs only include the following:

A. Payroll costs for employees in the direct employ of Contractor in the performance of the Work under schedules of job classifications agreed upon by City and Contractor. Payroll costs for employees not employed full time on the Work shall be apportioned on the basis of their time spent on the Work. Payroll costs shall include salaries and

FOR COUNCIL ONLY NOT FOR CONSTRUCTION

wages plus the cost of fringe benefits which shall include social security contributions, unemployment, excise and payroll taxes, workers' compensation, health and retirement benefits, sick leave, vacation and holiday pay applicable thereto. Such employees may include superintendents and foremen at the site. The expenses of performing work after regular working hours, on Saturday, Sunday or legal holidays shall be included in the above only to the extent authorized by City in writing.

B. Cost of all materials and equipment furnished and incorporated in the Work, including costs of transportation and storage thereof, and suppliers' field services required in connection therewith. All trade discounts, rebates and refunds and all returns from sale of surplus materials and equipment shall accrue to City, and Contractor shall make provisions so that they may be obtained.

C. Payments made by Contractor to the subcontractors for work performed by subcontractors. If required by City, Contractor shall obtain competitive bids from subcontractors acceptable to Contractor and shall deliver such bids to City who will then determine which bids will be accepted. If a subcontract provides that the subcontractor is to be paid on the basis of cost of the work plus a fee, the subcontractor's cost of the work shall be determined in the same manner as Contractor's cost of the work. All subcontracts shall be subject to the other provisions of the Contract Documents insofar as applicable.

D. Costs of special consultants (including engineers, architects, testing laboratories, surveyors, and accountants) employed for services specifically, and only, related to the Work.

E. Supplemental costs including the following:

1. The proportion of necessary transportation, travel and subsistence

FOR COUNCIL ONLY NOT FOR CONSTRUCTION

expenses of Contractor's employees incurred in discharge of duties connected with the Work.

2. Cost, including transportation and maintenance, of all materials, supplies, equipment, machinery, appliances, office and temporary facilities at the site and hand tools not owned by the workers, which are consumed in the performance of the Work, and cost, less market value of such items used but not consumed which remain the property of Contractor.

3. Rentals of all construction equipment and machinery and the parts thereof whether rented from Contractor or others in accordance with rental agreements approved by City, and the costs of transportation, loading, unloading, installation, dismantling and removal thereof, all in accordance with terms of said rental agreements. The rental of any such equipment, machinery or parts shall cease when the use thereof is no longer necessary for the Work.

4. Sales, consumer, use or similar taxes related to the Work, and for which Contractor is liable, imposed by laws and regulations.

5. The cost of utilities (including the meter and all associated installation costs), fuel and sanitary facilities at the site.

6. Cost of premiums for additional bonds and insurance required because of changes in the Work.

1-1.26 **DIRECTOR.** Director of the Department for Contract Administration or his or her designee.

1-1.27 **EMERGENCY.** Any sudden generally unforeseen occurrence (such as a fire, flood, storm, earthquake, civil disorder, or other natural and/or man-made disaster) that has the potential to adversely affect the safety of life, the Work, and/or adjacent property; to interrupt contracts essential to the performance of the Work; and/or to cause catastrophic failure of City

FOR COUNCIL ONLY NOT FOR CONSTRUCTION

equipment and/or facilities.

1-1.28 **ENGINEER OR ARCHITECT.** Professional Engineer or Architect designated for a particular project responsible for signing and sealing the permit drawings, interpretation of the drawings where ambiguities exist, review of requests for information, design Change requests and Shop Drawings, resolution of errors and omissions, and finalization of Record Documents.

1-1.29 **FINAL COMPLETION.** When the project has been completed according to the terms and conditions set forth in the Contract Documents. Final Completion is not the same as Acceptance.

1-1.30 **FORCE ACCOUNT.** Payment by force account shall mean payment on the basis of the Contractor's time and materials.

1-1.31 **GENERAL NOTES.** The written instructions, provisions, conditions or other requirements appearing on the Contract Drawings and so identified thereon, which pertain to the performance of the Work.

1-1.32 **INSTALLATION, INSTALL.** Completely assembling, erecting, and/or connecting materials, parts, components, supplies, and related equipment specified or required for the completion of the Work.

1-1.33 **LABORATORY.** Established professional laboratories authorized by the City to test materials and Work involved in the Contract.

1-1.34 **LEGAL HOLIDAYS.** Those days designated as Federal holidays or declared by the City, or otherwise specified in the Contract Documents.

1-1.35 **LIQUIDATED DAMAGES.** The amount prescribed in the Contract Documents to be paid to the City or to be deducted from any payments due or to become due the

FOR COUNCIL ONLY NOT FOR CONSTRUCTION

Contractor for each day's delay in completing the whole or any specified portion of the Work beyond the time allowed in the Supplemental Conditions.

1-1.36 **NOTICE OF COMPLETION.** A legal notice filed by the City with the Placer County Recorder's Office stating that construction has been completed and accepted by the City.

1-1.37 **NOTICE TO PROCEED.** A written notice given by the City to the Contractor fixing the date on which the Contract Time will commence to run.

1-1.38 **NOTICE OF TERMINATION.** Written notice from the City to the Contractor and/or its Surety terminating the Agreement, or a portion thereof, either for convenience of the City or for default due to the Contractor's failure to perform its contractual obligations.

1-1.39 **OVERHEAD.** Business or administrative expenses (including but not limited to office expenses, administrative staff, rent, insurance, utilities) not chargeable to a particular part of the Work. The term "Overhead" shall include all of the following:

A. Payroll costs and other compensation of Contractor's officers, executives, principals (of partnerships and sole proprietorships), general managers, engineers, architects, estimators, attorneys, auditors, accountants, purchasing and contracting agents, expediters, timekeepers, clerks, and other personnel employed by Contractor whether at the Work Site or in Contractor's principal or a branch office for general administration of the Work and not specifically included in the agreed upon schedule of job classifications, all of which are to be considered administrative costs covered by the Contractor's fee.

B. Expenses of Contractor's principal and branch offices other than Contractor's office at the site.

FOR COUNCIL ONLY NOT FOR CONSTRUCTION

C. Any part of Contractor's capital expenses, including interest on Contractor's capital employed for the Work and charges against Contractor for delinquent payments.

D. Cost of premiums for all bonds and for all insurance whether or not Contractor is required by the Contract Documents to purchase and maintain the same, except as provided in section 1-1.25.

E. Other overhead or general expense costs of any kind.

1-1.40 **PREMISES.** Shall mean the area within construction easements, easements, rights of entry and City owned property which surrounds the Work Site, limited by the property lines thereof. In some cases Premises may coincide with the Work Site.

1-1.41 **PROFESSIONAL ENGINEER.** An engineer licensed by the Board of Registration for Professional Engineers, State of California.

1-1.42 **PROJECT MANUAL.** A book containing all Contract Documents.

1-1.43 **PROPOSAL FORMS.** The approved forms upon which the City requires that each Bidder submit its bid with regard to the Agreement.

1-1.44 **REQUEST FOR INFORMATION (RFI).** A document issued by the Contractor requesting information concerning the Contract Documents.

1-1.45 **SAFETY.** Includes the practice of identifying potential hazards, assessing their risk, taking corrective action where possible, including and providing control measures such as engineering design, written procedures, and the personal protective equipment for workers in order to eliminate or reduce the risk for exposure in the workplace.

1-1.46 **SCHEDULE OF VALUES.** The breakdown of the Contract Price that will serve as the basis for Contractor's Applications of Payment. Any lump sum bid item

FOR COUNCIL ONLY NOT FOR CONSTRUCTION

included within the Contract Price will be apportioned among values relating to specific components of the Work covered by said lump sum.

1-1.47 **SHOP DRAWINGS.** Drawings, plans, diagrams, schedules, and other data specifically prepared and submitted to the City by the Contractor, showing in detail: (a) the proposed fabrication and assembly of a special component of the Work; and (b) the Installation (form, fit and attachment details) of a special component of the Work. Shop Drawings shall be deemed to include Working Drawings, Product Data, literature, and applicable performance and test data.

1-1.48 **SPECIFICATIONS.** The technical Specifications for the Work prepared by the Director or an Engineer or Architect describing in detail the nature of the Work, its components, any performance standards, and how the Work is to be constructed.

1-1.49 **SUBCONTRACTOR.** Any individual, firm, partnership, limited liability company, corporation, joint venture, or combination thereof, other than employees of the Contractor, engaged by the Contractor to furnish services, labor, equipment and materials for a portion of the Work.

1-1.50 **SUBMITTALS.** Those documents required to be submitted by the Contractor for review by the City in accordance with the Contract Documents.

1-1.51 **SUPPLEMENTAL CONDITIONS.** The Supplemental Conditions are specific clauses modifying or supplementing these General Conditions.

1-1.52 **SUPPLIER.** Any individual, firm, partnership, limited liability company, corporation, joint venture, or combination thereof, other than employees of the Contractor, that supplies a tangible product as a portion of the Work, with services usually limited to delivery and/or required testing, and with manufacturing, fabrication, or production facilities located off

FOR COUNCIL ONLY NOT FOR CONSTRUCTION

the Work Site.

1-1.53 **WORK.** The furnishing of all labor, and the furnishing and Installing of all materials, articles, supplies and equipment as specified, designated, or required by the Contract Documents.

1-1.54 **WORK SITE.** All or portion of the Premises that the Work is limited to as shown on the Contract Drawings or designated by the Director. Public streets are not included unless Work is being done within the street right-of-way.

1-1.55 **WORKING DRAWINGS.** Original drawings prepared by the Contractor and/or its Subcontractors or Suppliers, of any tier, illustrating Work required for construction that will not become an integral part of the completed Work. This includes, but is not limited to, drawings for temporary structures such as decking, bulkheads, excavation supports, utility support, groundwater control, forming, falsework, access roads, staging areas, staging plans, and diversion plans. A Working Drawing is one type of a Shop Drawing.

FOR COUNCIL ONLY NOT FOR CONSTRUCTION

SECTION 2

CONTROL AND SCOPE OF THE WORK

2-1.01 **AUTHORITY OF DIRECTOR.** The Contract shall be performed in a manner satisfactory to the Director who shall decide all questions which may arise as to the quality or acceptability of materials furnished and Work performed and as to the manner of performance and rate of progress of the Work; all questions which may arise as to the interpretation of the Contract Documents; all questions as to the acceptable fulfillment of the Contract on the part of the Contractor; and all questions as to compensation. The Director shall have authority to enforce and make effective such decisions and orders in the event the Contractor fails to promptly carry out the same.

2-1.02 **INTENT OF CONTRACT DOCUMENTS.** The Contract Documents are complementary, and what is called for by one shall be as binding as if called for by all. The intent of the Contract Documents is to describe the details for the construction and completion of the Work. Where the Contract Documents describe portions of the Work in general terms, but not in complete detail, it is understood that only the best general practice shall be followed and that only materials and workmanship of the best quality are to be used. Any Work, materials, or equipment that are customarily provided, or that are reasonably inferable from the Contract Documents as being required to produce the intended result, shall be supplied, whether or not specifically called for. When words, which have a well-known technical or trade meaning are used to describe work, materials, or equipment, such words shall be interpreted in accordance with that meaning. Unless otherwise specified, the Contractor shall furnish all labor, materials, tools, equipment, and incidentals, and do all the Work involved in executing the Contract in a

FOR COUNCIL ONLY NOT FOR CONSTRUCTION

satisfactory and workmanlike manner.

Reference to standard specifications, manuals or codes of any technical society, organization or association, or to the laws or regulations of any governmental authority, whether such reference be specific or by implication, shall mean the latest standard specification, manual, code, laws, or regulations in effect on the first published date of the Notice to Contractors, except as may be otherwise specifically stated. However, no provision of any referenced standard specification, manual or code (whether or not specifically incorporated by reference in the Contract Documents) shall be effective to change the duties and responsibilities of City or Contractor, or any of their consultants, agents, or employees from those set forth in the Contract Documents, nor shall it be effective to assign to City, or City's designated representative, any duty or authority to supervise or direct the furnishing or performance of the Work or any duty or authority to undertake responsibility contrary to other provisions of the Contract Documents.

The Contract Documents are divided into parts, divisions, sections and articles for convenience, organization and reference. Generally, there has been no attempt to divide the Specifications sections into work performed by the various building trades, work by separate Subcontractors, or work required for separate facilities in the project.

2-1.03 **EXAMINATION AND VERIFICATION OF CONTRACT DOCUMENTS.** The Contractor shall thoroughly examine and become familiar with all of the various parts of the Contract Documents and shall determine the nature and location of the Work, the general and local conditions (including applicable laws) and all other matters which can in any way affect the cost, progress or performance of the Work under this Agreement. Failure to make an examination necessary for this determination shall not release the Contractor from the obligations of the Agreement. No oral agreement or conversation with any officer, or employee

FOR COUNCIL ONLY NOT FOR CONSTRUCTION

of the City, or with the City's designated representative either before or after the execution of the Agreement, shall affect or modify any of the terms or obligations contained in the Contract Documents.

2-1.04 **CONTRACT DRAWINGS.** The Contract Drawings consist of general drawings and show such plans, elevations, sections, details and schedules as are necessary to give a graphic and pictorial description of the contemplated construction. All authorized alterations affecting the requirements and information given on the Contract Drawings shall be in writing.

2-1.05 **COORDINATION AND INTERPRETATION OF CONTRACT DOCUMENTS.** All Contract Documents are essential parts of the Contract, and a requirement occurring in one is as binding as though occurring in all. They are intended to be complementary, and to describe and provide for a complete Work.

In the event of inconsistencies between requirements contained in different components of the Contract Documents, the precedence of the Contract Documents shall be as follows to resolve conflicts:

1. Change Orders
2. The Contract (including Addenda)
3. The Supplemental Conditions
4. Specifications
5. Contract Drawings
6. The General Conditions

Should it appear that the Work to be done or any of the matters relative thereto are not sufficiently detailed or explained in the Contract Documents, the Contractor shall submit a

FOR COUNCIL ONLY NOT FOR CONSTRUCTION

Request for Information ("RFI") to the Director for such further explanations as may be necessary and shall conform to the written explanation given as if part of the Contract Documents. The decisions of the Director shall be final.

Contractor shall anticipate that it will be necessary to prepare and submit RFIs regarding the Contract Documents. The City will respond to each RFI by no later than fourteen (14) Days after receipt of the RFI, unless the RFI is of significant complexity. Furthermore, in the event that there are numerous RFIs pending, Contractor shall cooperate with the City in establishing a priority for responding to the RFIs, and potentially some RFIs may be responded to beyond the fourteen (14) Day period.

Each RFI prepared by Contractor shall be full and complete. Contractor shall prepare RFIs so as to not cause any delay to the progress of the Work and to not cause any impact to Contractor's labor productivity in the field. Contractor shall not assert any Claims for delay or interference against the City if Contractor fails to timely submit any RFI to the City, after consideration of the response period allowed for by the City.

The response to an RFI shall not, by itself, constitute a writing that authorizes Contractor to perform any Work that causes an adjustment to either the Contract Price or the Contract Time. If Contractor believes that any response to any RFI should constitute a compensable change, Contractor shall provide a Notice of Potential Claim as provided in Section 7-1.03, below. Contractor's failure to provide the required written notice shall constitute a waiver of the Contractor's right to seek a compensable change based on the RFI response.

The Contractor shall examine all Contract Documents; shall verify all figures in the Contract Documents before laying out the Work; shall promptly notify the City of all errors, inconsistencies, and/or omissions that it discovers; and, in instances where such non-

FOR COUNCIL ONLY NOT FOR CONSTRUCTION

conformities are discovered, shall obtain specific instructions in writing from the City before proceeding with the Work. Contractor's performance of any Work affected by such non-conformities prior to the City's decision shall be at the Contractor's risk. Any Work that is customarily provided or that is reasonably inferable shall not relieve the Contractor from performing such work at no additional expense and/or delay, and such Work shall be performed as if fully set forth in the Contract Documents.

2-1.06 **INDEPENDENT CONTRACTOR STATUS.** The Contractor shall independently perform all Work required by the Contract Documents and shall not be considered as an agent or employee of the City, nor shall the Contractor's Subcontractors or employees be considered as subagents of the City.

The Contractor and Contractor's Subcontractors shall be licensed in accordance with the laws of the State of California and as more particularly described in the bidding documents or elsewhere in the Contract Documents.

2-1.07 **ORDER OF WORK.** When required by the Contract Documents, the Contractor shall follow the sequence of operations set forth therein. Full compensation for conforming to such requirements will be considered as included in the prices paid for the various Contract items of work, and no additional compensation will be allowed therefor.

2-1.08 **SUBMITTALS.** It shall be the Contractor's responsibility to timely submit, so as to cause no delay in the Work, all Shop Drawings, descriptive data, manuals, instructions, affidavits, samples for the various trades as required by the Supplemental Conditions and Specifications, and offers of alternatives, if any. Such Submittals shall be checked and coordinated by the Contractor with the Work of other trades involved before they are submitted to the Director for examination.

FOR COUNCIL ONLY NOT FOR CONSTRUCTION

The Contractor shall deliver at least one (1) electronic copy of the Submittals to the Director, and one (1) hard copy if requested. Work requiring the submittal of working drawings, descriptive data or samples shall not begin prior to approval of said Submittal by the Director.

The time allowed for review of each Submittal will be as indicated in the Supplemental Conditions. Review time will start upon receipt of the Submittal by the Director and will end upon the Director's mailing of the Submittals to the Contractor. Defective, incomplete or partial Submittals will be returned to the Contractor unreviewed.

Submittals shall be made by a letter of transmittal that shall contain a list of all matter submitted and identification of all variations from the Contract Documents contained in the Submittal. The letter and all items accompanying the same shall be fully identified as to project name and location, Contractor's name, district, county, and Contract number, with ample cross-references to the Contract Documents, to facilitate identification of items and their location in the Work.

All Shop Drawings and supporting data, catalogs, schedules, shall be submitted as the instruments of the Contractor, who shall be responsible for their accuracy and completeness. These Submittals may be prepared by the Contractor, Subcontractors, or Suppliers, but the Contractor shall ascertain that Submittals meet all of the requirements of the Contract Documents, while conforming to structural, space, and access conditions at the point of Installation. The Contractor shall check all Submittals before submitting them to the Director.

2-1.08A **SHOP DRAWINGS.** The Contractor shall submit an electronic copy (searchable PDF) of all Shop Drawings required by the Supplemental Conditions or Specifications, and one (1) hard copy, if requested by the Director. Shop Drawings shall also be provided separately in AutoCAD format using the latest version of AutoCAD. An electronic

FOR COUNCIL ONLY NOT FOR CONSTRUCTION

copy will be returned to the Contractor either approved for use, as demonstrated by a stamp, or returned for correction and resubmittal. Materials, colors and/or samples will not be returned to the Contractor. Shop Drawings include any drawing, which requires execution by a draftsman as distinguished from printed matter. The size of Shop Drawings shall not exceed twenty-four inches (24") by thirty-six inches (36").

2-1.08B **DESCRIPTIVE DATA.** The Contractor shall submit an electronic copy (searchable PDF) of each set of manufacturer's brochures or other data required by the Supplemental Conditions or Specifications, and one (1) hard copy, if requested by the Director. The City will examine such Submittals and return either an electronic copy or a hard copy approved for use or returned for correction and resubmittal.

2-1.08C **SAMPLES.** The Contractor shall submit samples of articles, materials or equipment as required by the Supplemental Conditions or Specifications. The Work shall be in accordance with the approved samples. Samples shall be removed from City property when directed or may be incorporated in the Work if approved by the Director. Samples not removed by the Contractor will become the property of the City or, at the City's option, will be removed or disposed of by the City at the Contractor's expense.

2-1.08D **MANUALS, INSTRUCTIONS AND AFFIDAVIT.**

A. Manuals and Instructions. Where operation and maintenance manuals are required by the Supplemental Conditions, the Contractor shall submit two (2) sets of manuals, suitably bound, along with two (2) electronic copies in an approved format, to the Director within forty-five (45) Days after favorable review of the equipment or facilities. If operation and maintenance manuals are approved to be provided in PDF format, text shall be provided in searchable PDF format, making proper use of PDF for headings and heading levels,

FOR COUNCIL ONLY NOT FOR CONSTRUCTION

paragraphs, tables, and lists. Submitted operation and maintenance manuals shall be a collected, organized, and indexed set of bookmarked PDF documents comprising each operation and maintenance manual that corresponds to a hardcopy binder. All manuals shall be marked to indicate the specific equipment furnished for this project and shall include at a minimum:

1. Equipment summary form
2. Cover/Title page
3. Table of contents
4. Operating procedures including start-up, shutdown, normal operation, all operating modes, emergency shutdown, and safety precautions
5. Lubrication instructions (if required)
6. Preventative maintenance procedures
7. Troubleshooting and corrective maintenance procedures
8. Reinstallation instructions
9. Overhaul instructions (if applicable)
10. Parts identification list with exploded view and associated cross references
11. Recommended spare parts list
12. Operator safety requirements
13. Electrical and control system wiring drawings, including panel wiring control (ladder) diagrams, logic diagrams, loop diagrams, and interconnection diagrams
14. Panel layout and assembly drawings

FOR COUNCIL ONLY NOT FOR CONSTRUCTION

15. Mechanical drawings

16. Printouts of all software programs and configuration files

17. Factory and field test procedures and results

Operation and maintenance manuals for complex equipment shall also include:

18. Alternate specified operating modes

19. Emergency shutdown instructions

20. Normal shutdown instructions

21. Long term shutdown instructions

Operation and maintenance manuals for systems comprised of separate pieces of equipment shall include a system explanation of items 4, 7, 18, 19, 20, and 21 as well as the instructions for the separate pieces of equipment.

B. Affidavits. Where required in the Supplemental Conditions or Specifications, manufacturers of equipment shall provide field service as a part of this project. Equipment shall not be considered ready for full time operation until after the authorized factory-trained and qualified manufacturer's representative for the specific equipment has checked and adjusted the equipment and certified by written affidavit that the equipment has been properly Installed, tested, adjusted, lubricated, and calibrated, and is ready for full time operation. Acceptable affidavits shall be submitted prior to completion of the Work. Affidavits shall contain the following specific wording:

"The (Name of Equipment) has been properly installed, tested, adjusted, lubricated, and calibrated, and is ready for full time operation. The installation has been inspected and has been found to be in conformance with our (the manufacturer's) standards and requirements."

FOR COUNCIL ONLY NOT FOR CONSTRUCTION

No amplification, dilution, or modification of this specific wording will be permitted.

2-1.08E **ALTERNATIVES.** For convenience in designation in the Contract Documents, certain materials, articles, or equipment may be designated by a brand or a trade name or the name of the manufacturer together with catalog designation or other identifying information, hereinafter referred to generically as "designated by brand name." Except in those instances where the product is designated to match others in use in a particular improvement, either completed or in the course of completion, an alternative material, article, or equipment which is of equal quality and of the required characteristics for the purpose intended may be proposed for use provided the Contractor complies with the following requirements:

A. The Contractor shall submit its proposal for an alternative in writing. Such request shall be made in ample time to permit review and approval without delaying the Work. The Contractor shall not be entitled to an adjustment of the Contract Time or an increase in the Contract Price based on any Contractor-proposed substitution.

B. No such proposal will be considered unless accompanied by complete information and descriptive data, necessary to determine the equality of the offered materials. The Contractor shall satisfy the Director as to the comparative quality, suitability, or performance of the offered material, articles, or equipment. In the event that the Director rejects the use of such alternative materials, articles, or equipment, then one of the particular products designated by brand name shall be furnished.

C. The burden of proof as to the quality and suitability of alternatives shall be upon the Contractor and it shall furnish all information necessary as required by the Director. The Director shall be the sole judge as to the quality and suitability of alternative articles or materials and such decisions shall be final. Where use of an alternative material

FOR COUNCIL ONLY NOT FOR CONSTRUCTION

involves redesign of, or changes to, other parts of the Work, the cost and time required to effect such redesign or changes will be considered in evaluating the suitability of the alternative material. Cost of redesign by the City will be borne by the Contractor.

D. Whenever classification, rating or other certification by a body such as Underwriters Laboratories (UL) or the National Electrical Manufacturers Association (NEMA) is a part of the specification for any material, Contractor's request for use of alternative articles or materials shall be accompanied by reports from the listed or equivalent independent testing Laboratory indicating compliance with the Contract Documents. The cost of all testing required to prove equality of the material proposed shall be borne by the Contractor. Approval of an alternative shall be only for the characteristics or use named in such approval, and shall not be used to change or modify any requirement of the Contract Documents.

E. At its election, the City reserves the right to consider any Contractor proposed substitution as a Cost Reduction Proposal under Section 3-1.07 of these General Conditions in the event that there is a significant savings resulting from the substitution.

The Director will examine, with reasonable promptness, such Submittals, and return of Submittals to the Contractor shall not relieve the Contractor from responsibility for deviations and alternatives from the Contract Documents, nor shall it relieve the Contractor from responsibility for errors in the Submittals. A failure by the Contractor to identify in its letter of transmittal material deviations from the Contract Documents shall void the Submittal and any action taken thereon by the Director. When specifically requested by the Director, the Contractor shall resubmit such Shop Drawings, descriptive data and samples as may be required.

If any mechanical, electrical, structural, or other changes are required for the proper Installation and fit of alternative materials, articles, or equipment, or because of deviations from

FOR COUNCIL ONLY NOT FOR CONSTRUCTION

the Contract, such changes shall not be made without the approval of the Director and shall be made without additional cost to the City.

2-1.09 **DISPOSAL OF MATERIAL OUTSIDE THE WORK SITE.** Unless otherwise stated elsewhere in the Contract Documents, the Contractor shall, at its own cost and expense, make its own arrangements for disposing of materials outside the Work Site.

Except when material is to be disposed of at a landfill or recycling center, when any material is to be disposed of outside the Work Site, the Contractor shall first obtain written permission from the City to dispose of the material at the intended location. The City's approval will be contingent upon the Contractor obtaining a written permit from the property owner on whose property the disposal is to be made. Prior to the disposal of any material at the intended location, the Contractor shall submit such permit or a certified copy thereof to the City, together with a written release from the property owner absolving the City from any and all responsibility related to the disposal of material on said property.

Disposal of Hazardous Materials must be done in accordance with all laws and regulations. Copies of all required regulatory documentation including copies of final manifests shall be supplied to the City.

2-1.10 **ACCESS TO THE WORK.** The Contractor shall satisfy itself that the jurisdictions through which its operations and haul routes pass will permit such operations with respect to the type of vehicle, laden weights, frequency and dimensions of loads, hours of operation and required traffic control. All necessary permits, licenses or bonds shall be obtained and paid for by the Contractor.

2-1.11 **TEMPORARY UTILITIES.** The Contractor shall make its own arrangements with utility companies for any temporary services it may require in performance of

FOR COUNCIL ONLY NOT FOR CONSTRUCTION

the Work and shall pay all costs of these services directly to these utility organizations.

2-1.12 **UTILITY FACILITIES.** The Contractor shall protect from damage those utility facilities that are to remain in place, be Installed, relocated or otherwise arranged.

The Contractor's attention is directed to the possible existence of facilities not shown, and of facilities in a location different from that, which is indicated. The Contractor shall take steps to ascertain the exact location of all facilities prior to doing any Work, which may damage such facilities or interfere with their service. Where the location of a facility is indicated or inferred from the presence of visible facilities such as buildings, meters, and junction boxes, the Contractor shall make such excavations and explorations as are necessary to ascertain the correct location. Unless provided for elsewhere in the Contract Documents, the cost of such excavations and explorations will be considered as a part of the cost of other items of Work and no additional payment will be made. Such excavations and exploratory Work shall not entitle the Contractor to an extension of time.

If the Contractor discovers underground facilities not indicated or inferred from the Contract Documents, the Contractor shall immediately give the Director written notification of the existence of those facilities. The Contractor shall determine the exact location of the underground facilities and the cost of the work will be paid for in accordance with the Contract Documents. The underground facilities shall be protected from damage as directed by the Director and the cost of that work will be paid for as extra work. The Contractor shall, if directed by the Director, repair any damage, which may occur to the underground facilities. The cost of that repair work, not due to the failure of the Contractor to exercise reasonable care, will be paid for as extra work. Damage due to the Contractor's failure to exercise reasonable care shall be repaired at the Contractor's cost and expense.

FOR COUNCIL ONLY NOT FOR CONSTRUCTION

Where it is determined by the City that the rearrangement of an underground facility, the existence of which is not shown on the Contract Drawings, is essential in order to accommodate the Work, the City will provide for the rearrangement of such facility by other forces or, when so ordered by Change Order, such rearrangement shall be performed by the Contractor and will be paid for as provided under a Change Order.

The Contractor shall be responsible for the maintenance of all utility facilities placed by the Contractor in temporary locations, and all utilities within the construction area not required to be relocated but which are required to be shored or supported during the construction period. The cost of such maintenance shall be borne by the Contractor, and no other compensation shall be due the Contractor for this Work.

The cost of providing and maintaining all necessary or required temporary structures, of making any necessary repairs, replacements, or similar operations, or furnishing indemnity or other bonds, if required, and all costs required by this Section shall be paid by the Contractor and shall be included in the prices bid in the schedule for other items of work.

2-1.13 **PRESERVATION AND CLEANING.** The Contractor shall clean up the Work at frequent intervals and at other times when directed by the Director. While finish Work is being accomplished, floors, Work areas and finished areas shall be kept clean, free of dust, construction debris and trash. Upon completion of the Work, the Contractor shall remove from the Premises its construction equipment and any waste materials not previously disposed of, leaving the Premises thoroughly clean and ready for final inspection.

2-1.14 **LIMITATIONS ON WORK SITE AND PREMISES.** The Contractor shall limit its construction operations to the Work Site unless otherwise shown on the Contract Drawings or specified. The Contractor shall perform no operation of any nature over or on the

FOR COUNCIL ONLY NOT FOR CONSTRUCTION

Premises except such operations as are authorized by the Contract Documents or as authorized by the Director.

2-1.15 **DUST CONTROL.** During the performance of all Work under this Contract, the Contractor shall assume all responsibility for dust control and shall furnish all labor, equipment, and means required to carry out proper and efficient measures wherever and whenever dust control is necessary to prevent the operations from producing dust damage and nuisance to persons and property. Any claims resulting from dust damage or nuisance shall be borne solely by the Contractor. The Contractor shall comply with all applicable Air Quality Act requirements.

2-1.16 **SANITATION.** The Contractor shall provide sanitary facilities for all persons working on the Work.

2-1.17 **NIGHT WORK AND NORMAL WORKING HOURS.** Normal working hours at the construction site shall be between the hours of 7:00 a.m. and 7:00 p.m. Monday through Friday. Legal holidays are excluded. Certain utility connections and street operations are anticipated to require night Work by the Contractor during low usage periods. The Contractor may also be required to prosecute the Work at night if, at any time, the Director shall deem it necessary for the progress of the Work, or if emergencies arise. The Contractor shall promptly comply with any such requirements made in writing by the Director. The Contractor will also be permitted to Work at night if Contractor satisfies the Director of the need therefor, in order to maintain the required progress or protect the Work from the elements. Certain activities are required to be performed at night for nominal progress of the Work and/or are specified to be performed at night by other portions of the Supplemental Conditions. When required, ordered, or permitted to Work at night, the Contractor shall provide sufficient and

FOR COUNCIL ONLY NOT FOR CONSTRUCTION

satisfactory lighting and other facilities therefor. The Contractor shall receive no extra payment for night Work, if specified or if required to be performed during the normal progress of the Work, but compensation shall be considered as having been included in the price stipulated for the Work.

If Contractor performs work during weekends, holidays or any non-normal work hours, Contractor shall pay for required City Inspectors.

2-1.18 **LINES AND GRADES.** Unless otherwise provided in the Supplemental Conditions, the Contractor shall lay out all Work, including structures and pipelines, and shall be responsible for any errors resulting therefrom. In all questions arising as to proper location of lines and grades, the Director's decision will be final.

As part of the bid price for the construction of the improvements, the Contractor shall provide and be responsible for the layout of all Work on this project. The Contractor shall provide all necessary surveys, field staking, and positioning for the construction of all components at the proper alignment, elevations, grades, and positions, as indicated on the Contract Drawings and as required for the proper operation and function. The Contractor shall stake its Work area limits. Contractor shall perform all construction staking using a land surveyor licensed in the State of California. Contractor shall provide a staking plan prior to commencement of Work for the City's review and maintain monuments, stakes, and marks, and shall update the plan as necessary. Director, or Director's designated representative, may verify the field condition. Errors or inconsistencies in the Contract Documents discovered by the Contractor shall be reported to the Director within twenty-four (24) hours and prior to constructive forms or related improvements. Any work Installed with this requirement shall be subject to removal and replacement at the Contractor's expense.

FOR COUNCIL ONLY NOT FOR CONSTRUCTION

The Contractor's lay-out shall be based on existing structures, property lines, survey control, and bench marks established by the City. All structures and pipeline connections shall be Installed based on actual elevation of existing structures to which connections are made.

The Contractor shall supply such labor as required, at no extra charge, to aid and assist the Director in checking location and grades of the Work as set by the Contractor if the Director desires to perform this checking. This shall include moving materials and equipment located between monuments and the construction Work.

2-1.19 **ARCHEOLOGICAL DISCOVERIES.** Upon discovery of prehistoric or historic artifacts, or other indicators or examples of cultural resources discovered during the course of site preparation, grading, excavation, construction or other development activities, all operations within fifty feet (50') of the find shall cease until such time as the City provides the services of a qualified archeologist to evaluate the finds and recommend appropriate action.

Prehistoric materials can include flaked stone tools (e.g., projectile points, knives and choppers) or tool making debris of obsidian, chert, quartzite and other materials, culturally darkened soil (i.e., midden, which often contains heat affected rock, ash and charcoal, shellfish remains, and cultural materials), and stone milling equipment such as mortars, pestles and hand stones. Historic material may include wood, stone, concrete or adobe footings, walls and other structural remains; debris filled wells or privies; and deposits of wood, metal, glass, ceramics and other refuse.

2-1.20 **PRESERVATION OF MONUMENTS.** Any monuments or bench marks disturbed by construction operations shall be repaired per the City's standard and promptly re-established by a registered land surveyor or civil engineer. A plat for each monument shall be furnished to the Director after the plat has been recorded with the Placer

FOR COUNCIL ONLY NOT FOR CONSTRUCTION

County Recorder's Office at no additional cost to the City. The recorded plat shall serve as a record of the re-establishment of said existing survey points.

2-1.21 **CONFORMITY WITH CONTRACT DOCUMENTS.** Work and materials shall conform to the lines, grades, cross sections, dimensions and material requirements, including tolerances, required by the Contract Documents. Although measurement, sampling and testing may be considered evidence as to such conformity, the City shall be the sole judge as to whether the Work or materials deviate from the Contract Documents. At its option, the City may elect to accept deviations from the Contract Documents with appropriate backcharge Assessments against the Contractor, and, if such an election is made, the City will provide written notice to the Contractor of such acceptance.

2-1.22 **FINAL CLEANUP.** Prior to final Acceptance of the Work, the Contractor shall thoroughly clean the Premises, remove all temporary structures built by or for the Contractor, and remove all equipment and surplus construction material and debris from the area. The entire project, before Acceptance by the City, shall be left in a neat and clean condition. All Work areas and temporary construction areas shall be returned to essentially the same conditions existing before the commencing of project construction.

2-1.23 **AS-BUILT DOCUMENTS AND DRAWINGS.** The Contractor shall maintain one set of the full size prints furnished by the City and mark thereon in color any deviations from plan dimensions, elevations, or orientations. Also, the Contractor shall locate on said prints, all underground facilities, such as piping, conduits and tanks by accurate field measurement from structure walls, corners, etc. The Contractor shall submit the prints and an electronic CD (searchable PDF or source file format such as AutoCAD) in good condition to the Director upon completion of the job as a condition of Acceptance of the project. Marked prints

FOR COUNCIL ONLY NOT FOR CONSTRUCTION

shall be updated at least once each week and shall be available to the Director for review as to currency prior to developing partial payment estimates. After the completion of testing, but prior to Acceptance, the Contractor shall submit As-Built electrical drawings in color and an electronic CD showing all components and their wiring, and as specified in the Supplemental Conditions.

2-1.24 **SUPERINTENDENCE.** The Contractor shall supervise and direct the Work, which shall be performed in accordance with the requirements of the Contract Documents. The Contractor shall be solely responsible for implementation of all construction means, methods, techniques, sequences, and procedures and for coordination of all portions of the Work under the Agreement. The Contractor shall be solely responsible for the safety of its employees, Subcontractors of any tier, Suppliers, visitors to the Contractor, and other third parties associated with the Contractor.

The Contractor shall designate in writing before starting Work, an authorized representative who shall have the authority to represent and act for the Contractor.

When the Contractor is comprised of two (2) or more persons, firms, partnerships, or corporations functioning on a joint venture basis, said Contractor shall designate in writing before starting Work, the name of one authorized representative who shall have the authority to represent and act for the Contractor. Instances of misconduct, contract non-compliance, unsatisfactory performance, or incompetence by these personnel shall be grounds for the City to direct Contractor to dismiss them from the Project. Contractor shall immediately comply with the City's request for dismissal, at no cost to the City, and shall designate a replacement, which shall be subject to approval by the City.

Said authorized representative shall be present at the site of the Work at all times while Work is actually in progress on the Contract. When Work is not in progress and during periods

FOR COUNCIL ONLY NOT FOR CONSTRUCTION

when Work is suspended, arrangements acceptable to the Director shall be made for any Emergency Work that may be required.

Whenever the Contractor or its authorized representative is not present on any particular part of the Work where it may be desired to give direction, orders will be given by the Director, which shall be received and obeyed by the superintendent or foremen who may have charge of the particular Work in reference to which the orders are given.

Any order given by the Director, not otherwise required by the Supplemental Conditions to be in writing, will on request of the Contractor, be given or confirmed by the Director in writing.

2-1.25 **CHARACTER OF WORKER.** If any Subcontractor or person employed by the Contractor shall appear to the Director to be incompetent or to act in a disorderly or improper manner, he or she shall be removed immediately on the requisition of the Director, and such person shall not again be employed on the Work.

2-1.26 **INSPECTION.** The Contractor shall at all times permit the Director to inspect the Work or any part thereof. The Contractor shall maintain proper facilities and provide safe access for such inspection by the Director to all parts of the Work, and to the shops where the Work is in preparation. Work shall not be covered up until authorized by the Director and the Contractor shall be solely responsible for notifying the Director where and when such Work is in readiness for inspection and testing. Should any such Work be covered without authorization, it shall, if so ordered, be uncovered at the Contractor's expense.

Unless otherwise designated as normal working hours, whenever the Contractor intends to perform Work on Saturday, Sunday, or a Legal Holiday, the Contractor shall give notice to the Director of such intention forty-eight (48) hours prior to performing such Work, or such longer

FOR COUNCIL ONLY NOT FOR CONSTRUCTION

period as may be specified so that the Director may make necessary arrangements.

The observation and/or approval of the workmanship or materials by the City shall not relieve the Contractor of any obligations to fulfill the requirements of the Contract Documents. Workmanship and materials not meeting such requirements shall be corrected and unsuitable Work or material may be rejected, notwithstanding that such Work or materials have been previously observed and/or approved by the City, or payment therefor has been included in a progress estimate.

The City may order re-examination of questioned Work at any time before final Acceptance. If so ordered, the Contractor shall uncover the Work. If such work is found to be in accordance with the Contract Documents, the City will pay for the cost of uncovering, removing, recovering and replacing the parts removed; but if such Work so exposed or examined is not in accordance with the Contract Documents, the uncovering, removal, recovering and replacement shall be at the Contractor's expense. Work that has been covered prior to observation by the City does not qualify as re-examined work; the City may order such work uncovered for observation without payment of any costs.

2-1.27 **REMOVAL OF REJECTED AND UNAUTHORIZED WORK.** All Work which has been rejected shall be remedied, or removed and replaced by the Contractor in a manner acceptable to the Director and no compensation will be allowed the Contractor for such removal, replacement, or remedial Work.

Any Work done beyond the lines shown on the Contract Drawings or established by the Director, or any Work done without written authority will be considered as unauthorized Work and will not be paid for. Upon order of the Director, unauthorized Work shall be remedied, removed, or replaced at the Contractor's expense.

FOR COUNCIL ONLY NOT FOR CONSTRUCTION

Upon failure of the Contractor to comply promptly with any order of the Director made under this section, the Director may cause rejected or unauthorized Work to be remedied, removed, or replaced, and the costs thereof will be deducted from any moneys due or to become due the Contractor.

FOR COUNCIL ONLY NOT FOR CONSTRUCTION

SECTION 3

CHANGES IN THE WORK

3-1.01 **CHANGES.** The Director, without invalidating this Agreement and without notice to Contractor's surety, may order changes in the Work, consisting of additions or deletions, or other revisions. The Contract Price and the Contract Time shall be adjusted accordingly. All such changes in the Work, including in the Contract Price and the Contract Time, shall be authorized only by Contract Change Order, signed by the Director.

If Contractor claims that performance of any work entitles it to additional compensation or to an extension of time for performance of the Work, Contractor shall provide written notice to the City of any such claim prior to undertaking such work. Contractor shall provide written notice of any anticipated impacts to the Contract Price or Contract Time within three (3) Days of discovering such impact, by submitting a Notice of Potential Claim described in Section 7-1.03 below, or notice of delay as described in Section 6-1.09 below. If the Director refuses to issue a Change Order for such work, Contractor shall perform that work if directed or obligated to do so and shall submit a complete and specific Claim for additional compensation and/or extension of time for performance within fifteen (15) Days after such work is performed, as described in Section 7-1.03 below. Failure to provide written notice of claims prior to undertaking such work, failure to provide a timely Notice of Potential Claim, or failure to submit timely a complete and specific Claim for additional compensation and/or extension of the time for performance, shall be deemed a waiver and abandonment of any such Claim. No Claim, dispute or controversy shall interfere with the progress or performance of the Work and the Contractor shall proceed with the Work as directed by the Director. Failure to so proceed shall amount to a

FOR COUNCIL ONLY NOT FOR CONSTRUCTION

default under this Agreement.

3-1.02 **PROPOSED CHANGE ORDERS.** The Contractor will be notified in writing of a proposed Change Order describing the intended change. Within fifteen (15) Days after receipt of a written request, the Contractor shall submit its proposed price to be added or deducted from the Contract Price due to the change and its estimate of the extent of the adjustment in the Contract Time, if any. The Contractor's proposed price to be added to or deducted from the Contract Price shall be supported by a detailed estimate of cost prepared by the Contractor, vendor or Supplier. The Contractor's proposed price submittal shall be accompanied by a statement of the time necessary for the changed Work, together with a description of how this time will be incorporated into the current Construction Schedule. The Contractor shall upon request by the Director permit inspection of its original Contract estimate, subcontract agreements or purchase orders relating to the change.

If agreement is reached on the adjustment in compensation as provided in Section 3-1.05, "Contract Price Adjustment," of these General Conditions, the Contractor shall proceed with the Work as changed at the agreed price.

If the Contractor and the Director fail to agree as to the adjustment in compensation for the performance of the changed Work, the Contractor, upon written order from the Director, shall proceed immediately with the changed Work and the Contract Price shall be adjusted in accordance with Section 3-1.06, "Force Account Payment," of these General Conditions.

If the Contractor fails to submit its cost estimate within such fifteen (15) Day period, the Contractor shall commence the Work as changed immediately upon receipt of written order of the Director, and the Contract Price will be adjusted in accordance with the Director's cost estimate for the changed Work.

FOR COUNCIL ONLY NOT FOR CONSTRUCTION

3-1.03 **EMERGENCY AND INDETERMINATE TYPE CHANGE ORDERS.** Changes in the Work made necessary by an Emergency, as determined by the Director, or changes of a kind where the extent of the Work cannot be determined until completed, may be authorized by the Director in writing. The Change Order shall state that it is issued pursuant to this Section 3-1.03. Upon receipt of an authorized Change Order or other written order of the Director, the Contractor shall proceed with the ordered Work and the Director will maintain a daily job record containing a detailed summary of all labor, materials and equipment required for the changed Work.

Within fifteen (15) Days after receiving a written request, the Contractor shall submit a detailed estimate of cost for the change and any requested change in Contract Time in the same manner as required for proposed Change Orders in Section 3-1.02 of these General Conditions.

3-1.04 **EXECUTED CHANGE ORDER.** A Contract Change Order signed by both the Director and the Contractor is an "executed Contract Change Order." By signing the Contract Change Order, the Contractor agrees that the specified compensation constitutes full compensation for the changed Work, including payment for interruption, disruption, acceleration, extended Overhead, delay or any other "impact" claim or "ripple effect" claim. The Contractor specifically understands and agrees that its execution of the Contract Change Order shall constitute a waiver of any right for the Contractor to claim any additional compensation with respect to the subject matter of the Contract Change Order.

3-1.05 **CONTRACT PRICE ADJUSTMENT.** If a Contract Change Order provides for an adjustment to the Contract Price, the amount of such adjustment shall be determined by one of the following methods, or a combination thereof, as determined by the City and in its sole discretion:

FOR COUNCIL ONLY NOT FOR CONSTRUCTION

A. Lump sum. The Contractor and the City may agree on a lump sum amount for the Change Order. At the City's request, the Contractor will provide pricing for the work. Maximum markups for Contract Change Orders paid for using lump sum pricing shall be paid for in the same manner and in the same amounts as markups for Force Account work, as described in Section 3-1.06 below.

B. Unit Prices. The unit prices set forth in the Contractor's Schedule of Bid Prices will be utilized where they are applicable and acceptable to the City. The Contractor's unit prices shall remain firm and shall not be subject to adjustment unless and until the actual quantity of work is increased or decreased by Contract Change Order in an amount greater than twenty-five percent (25%) from the estimated quantity indicated for such item. No markups will be given for Contract Change Orders paid for using unit prices.

Unit prices for new items included in the Contract Change Order but not included in the original bid shall be as mutually agreed upon or, in the absence of agreement, as determined by the City in the same manner as if the work were to be paid for on a Force Account basis, as described in Section 3-1.06 below.

C. Force Account. Where the City and the Contractor are unable to agree on lump sum pricing and if the City does not elect to utilize the unit prices in Contractor's bid, or such unit prices are not applicable, the changed work will be performed and tracked by the Contractor as Force Account work, as described in Section 3-1.06 below. The City will pay for such work, including markups, properly attributable to the change in accordance with those Force Account provisions.

D. Eliminated Items. The City reserves the right to delete any bid item of Work in its entirety. The City makes no representation that any work under a bid item of Work

FOR COUNCIL ONLY NOT FOR CONSTRUCTION

will be performed, and all work may be subject to a Contract Change Order that deletes such work. Bid items are distinct and severable from the other bid items, and the Contractor shall not be entitled to any anticipated profit, unabsorbed Overhead, or other indirect expense attributable to the deleted item, except as provided immediately below with regard to Force Account mark-ups on the direct and verifiable costs incurred prior to the City's order that deletes the work.

Should any bid item of Work be eliminated in its entirety and not accounted for as described immediately above and, in the absence of an executed Contract Change Order covering such elimination, payment will be made to the Contractor for actual direct and verifiable costs incurred in connection with such eliminated bid item if incurred prior to the date of notification in writing by the City of such elimination. If acceptable material is ordered by the Contractor for the eliminated item prior to the date of notification of such elimination by the City, and if orders for such material cannot be canceled, it will be paid for at the actual direct and verifiable cost to the Contractor. Actual direct costs shall include documented vendor shipping fees, Supplier restocking fees, if applicable, and Contractor handling costs directly related to the eliminated item(s). In such case, the material paid for shall become the property of the City and the actual cost of any further handling will be paid for by the City. If the material is returnable to the vendor and if the City so directs, the material shall be returned and the Contractor will be paid for the actual direct cost of charges made by the vendor for returning the material. The actual direct cost of handling returned materials will also be paid for by the City. The actual direct and verifiable costs to be paid by the City as provided herein will be computed in the same manner as if the work were to be paid for on a Force Account basis, including the application of Force Account mark-ups to said costs.

3-1.06 **FORCE ACCOUNT PAYMENT.** When Work performed pursuant to a

FOR COUNCIL ONLY NOT FOR CONSTRUCTION

Change Order is to be paid for on a Force Account basis, the Contractor's labor, materials and equipment used in the performance of such Work shall be subject to the approval of the City, and the compensation will be determined as set forth below in this section.

3-1.06A **LABOR.** The Contractor will be paid an amount based on the actual cost for the workers (including foremen when authorized by the Director) used in the actual and direct performance of the Work. All labor costs associated with Overhead, whether field or home office, are specifically excluded herein, as those labor costs are covered by the below mark-ups. The cost of labor, whether the employer is the Contractor, Subcontractor or other forces, shall include employer payments; assessment of benefits required by lawful labor union collective bargaining agreements; compensation insurance payments; contributions made to the State pursuant to the Unemployment Insurance Code; and for taxes paid to the Federal Government pursuant to the Social Security Act of August 14, 1935, as amended. No labor cost will be recognized at a rate in excess of the wages prevailing in the locality at the time the Work is performed, nor will the use of a labor classification, which would increase the cost, be permitted unless the Contractor establishes to the complete satisfaction of the Director the necessity for payment at a higher rate.

3-1.06B **MATERIALS.** Only materials furnished by the Contractor and necessarily used in the performance of the Work will be paid for. Such cost of materials may include the costs of procurement, transportation and delivery if necessarily incurred. If a cash or trade discount by the actual supplier is available to the Contractor, it shall be credited to the City. If materials are procured by the purchaser by any method which is not a direct purchase from and a direct billing by the actual supplier to such purchaser, the cost of such materials shall be deemed to be the price paid to the actual supplier plus the actual costs, if any, incurred in the

FOR COUNCIL ONLY NOT FOR CONSTRUCTION

handling of such materials. If the materials are obtained from a supply or source owned wholly or in part by the purchaser, the cost of such materials shall not exceed the price paid by the purchaser for similar materials furnished from said source on Bid items or the current wholesale price for such materials delivered to the job site, less any discounts as provided herein, whichever is lower. If, in the opinion of the Director, the cost of materials is excessive, or if the Contractor fails to furnish satisfactory evidence of the cost to it from the actual supplier within sixty (60) Days after the date of delivery of the materials or within fifteen (15) Days after Acceptance of the Agreement, whichever occurs first, the cost of the materials shall be deemed to be the lowest current wholesale price at which similar materials are available in the quantities required, less any discounts provided herein. The Department reserves the right to furnish such materials required by the Change Order as it deems advisable, and the Contractor shall have no claim for cost or markups on material furnished by the Department.

3-1.06C **EQUIPMENT.** The Contractor will be paid an amount based on the actual cost for the use of equipment directly required and approved by the Director in the performance of the changed Work. No payment will be made for time while equipment is inoperative due to breakdowns or on Days when no Work is performed. In addition, the rental time shall include the time required to move the equipment to the Work from the nearest available source of such equipment, and to return it to the source. If such equipment is not moved by its own power, then loading and transportation costs will be paid. Moving time, loading and transportation costs will only be paid if the equipment is used exclusively on the changed Work during the time between move in and move out. Individual pieces of equipment having a replacement value of One Thousand Dollars ($1000) or less shall be considered to be tools or small equipment, and no payment will be made therefore. For equipment owned,

FOR COUNCIL ONLY NOT FOR CONSTRUCTION

furnished, or rented by the Contractor, no cost therefore shall be recognized in excess of the equipment rental rates published by Caltrans at the following website address: http://www.dot.ca.gov/hq/construc/equipmnt.html. Equipment located at a Work Site and utilized on non-Force Account work shall not eligible for standby payment, and shall be charged on a Force Account basis only when solely performing pre-approved Force Account work tasks.

3-1.06D **MARKUPS.** When a Change Order increases the cost of the Work, the Contractor may add the following maximum markups to its actual costs of labor, materials, or equipment rental:

15 percent for labor;

10 percent for materials; and

5 percent for equipment rental.

The above markups include full compensation, covering the costs of all supervision, bonds, profit, Overhead, and other general expenses not specifically designated as a direct cost in Sections 3-1.06A through 3-1.06C above. The total payment (i.e., direct cost plus applicable markups) shall be deemed to be the actual cost of such work and shall constitute full compensation therefor. The Contractor specifically understands and agrees that such payment shall include any Contractor costs for interruption, disruption, and acceleration, extended Overhead, Change Order management, delay or other "impact" claim or "ripple effect" claim.

When work paid for on a Force Account basis is performed by forces other than the Contractor's own forces, the maximum allowable mark-ups for the Subcontractors' costs shall be fifteen percent (15%) for the cost of labor, ten percent (10%) for the cost of materials, and five percent (5%) for the cost of rented equipment. In these situations where the work is being performed by Subcontractors, the Contractor will only be entitled to an additional five percent

FOR COUNCIL ONLY NOT FOR CONSTRUCTION

(5%) mark-up and will not be entitled to receive the additional mark-ups specified in this section.

When a Change Order decreases the cost of the Work, the reduction in cost shall include a five percent (5%) markup on the estimated cost for furnishing the labor, materials and equipment, which would have been used on such Work, had the Change Order not been issued.

When a Change Order involves both added Work and deleted Work, the markup or markups to be used shall be as follows:

The actual costs of labor, materials, and equipment rental for added and deleted Work shall be calculated separately without adding markups. If the difference between the calculated costs for labor results in an increased cost, a markup of fifteen percent (15%) shall be applied to the increased cost. If the difference between the calculated costs of materials or equipment rental results in an increased cost, a markup of ten percent (10%) and five percent (5%) respectively, shall be applied to the increased costs of materials or equipment rental, as the case may be. If the difference between the calculated costs for labor, materials or equipment rental results in a decreased cost, a markup of five percent (5%) shall be applied to the decreased costs of labor, materials or equipment rental, as the case may be.

Contractor shall not add mark-ups on work performed and billed by City staff nor add mark-ups to successive iterations of proposed Change Order cost proposals returned to Contractor by the City due to incomplete or inaccurate information being originally submitted by the Contractor. If the Contract Price increases by the issuance of Change Orders, the penal amounts of the bonds required shall increase accordingly.

3-1.06E **RECORDS.** The Contractor shall maintain its records in such a manner as to provide a clear distinction between the direct costs of extra work paid for on a Force Account basis and the costs of other operations.

FOR COUNCIL ONLY NOT FOR CONSTRUCTION

From the above records, the Contractor shall furnish the City completed daily extra work reports, on forms acceptable to the City, for each Day's extra work to be paid for on a Force Account basis. The daily extra work reports shall itemize the materials used, and shall cover the direct cost of labor and the charges for equipment rental, whether furnished by the Contractor, Subcontractor, or other forces. The daily extra work reports shall provide names and identifications and classifications of workers, the hourly rate of pay and hours worked, and also the size, type, and identification number of equipment, and hours operated. Daily extra work and Force Account reports (actual or claimed) shall be signed by both the City's and the Contractor's representatives within twenty-four (24) hours of the performance of the work.

Valid copies of vendor's invoices shall substantiate material charges. Such invoices shall be submitted with the daily extra work reports, or if not available, they shall be submitted with subsequent daily extra work reports. Should said vendor's invoices not be submitted within sixty (60) Days after the date of delivery of the material or within fifteen (15) Days after the Acceptance of the Agreement, whichever occurs first, the City reserves the right to establish the cost of such materials at the lowest current wholesale prices at which said materials were available in the quantities, less any discounts.

The City will compare its records with the completed daily extra work reports furnished by the Contractor and make any necessary adjustments. When these daily extra work reports are agreed upon and signed by both parties, said reports shall become the basis of payment for the work performed, but shall not preclude subsequent adjustment based on a later audit by the City.

The Contractor's cost records pertaining to Work paid for on a Force Account basis shall be open to inspection or audit by representatives of the City during the life of the Agreement and for a period of not less than three (3) years after the date of Agreement completion and the

FOR COUNCIL ONLY NOT FOR CONSTRUCTION

Contractor shall retain such records for that period. Where payment for materials or labor is based on the cost thereof to forces other than the Contractor, the Contractor shall make every reasonable effort to insure that the cost records of such other forces will be open to inspection and audit by representatives of the City on the same terms and conditions as the cost records of the Contractor. If an audit is to be commenced more than sixty (60) Days after the date of Acceptance of the Agreement, the Contractor will be given fifteen (15) Days' notice of the time when such audit is to begin.

3-1.07 **COST REDUCTION PROPOSALS.** The City encourages the Contractor to submit Cost Reduction Proposals whenever the Contractor identifies areas and/or instances in which there can be savings to the Work. Contractor may submit to the City, in writing, proposals for modifying the plans, Specifications or other requirements of the Agreement for the sole purpose of reducing the total cost of construction, including the time for completion of the Work. The City may consider such Cost Reduction Proposals and, if accepted, the Agreement will be equitably adjusted. The City has no obligation to consider or accept Cost Reduction Proposals.

FOR COUNCIL ONLY NOT FOR CONSTRUCTION

SECTION 4

CONTROL OF MATERIALS

4-1.01 **MATERIALS.** The Contractor shall furnish all materials required to complete the Work, except materials that are designated in the Supplemental Conditions to be furnished by the City and materials furnished by the City in accordance with Section 3, "Changes in the Work," of these General Conditions.

Unless otherwise specified in the Supplemental Conditions, materials furnished by the Contractor for incorporation into the Work shall be new. When the quality or kind of materials, articles, or equipment is not particularly indicated, then the quality or kind thereof shall be similar to those that are indicated.

Articles or materials to be incorporated in the Work shall be stored in such a manner as to insure the preservation of their quality and fitness for the Work, and to facilitate inspection.

All materials which do not conform to the requirements of the Contract Documents as determined by the Director, will be rejected whether in place or not. Rejected material shall be removed immediately from the site of the Work, unless otherwise permitted by the Director. No rejected material, the defects of which have been subsequently corrected, shall be used in the Work, unless approval in writing has been given by the Director. Upon failure of the Contractor to comply promptly with any order of the Director made under these provisions, the Director shall have the authority to cause the removal and replacement of rejected material and to deduct the cost thereof from any moneys due or to become due the Contractor.

Manufacturer's warranties, guaranties, instruction sheets and parts lists, which are furnished with certain materials incorporated in the Work, shall be delivered to the Director

FOR COUNCIL ONLY NOT FOR CONSTRUCTION

before Acceptance of the Contract.

Unless otherwise designated in the Supplemental Conditions or Specifications, materials furnished by the City will be delivered to the job site. Materials furnished by the City that are designated in the Supplemental Conditions as available at locations other than the job site shall be hauled to the site of the Work by the Contractor at its expense, including any necessary loading and unloading that may be involved.

The Contractor will be held responsible for all materials furnished to it, and shall pay all demurrage and storage charges. City-furnished materials lost or damaged from any cause whatsoever shall be replaced by the Contractor. The Contractor will be liable to the Department for the cost of replacing City-furnished material and such costs may be deducted from any moneys due or to become due the Contractor.

4-1.02 **PRODUCT AND REFERENCE STANDARDS.** When descriptive catalog designations, including manufacturer's name, product brand name, or model number are referred to in the Contract Documents, such designations shall be considered as being those found in industry publications in effect on the day the Notice to Contractors for the Work is dated, except as may be otherwise stated.

When standards or test designations of the Federal Government, trade societies, or trade associations are referred to in the Contract Documents by specific date of issue, these shall be considered as part of the Contract. When such references do not bear a date of issue, the edition in effect on the day the Notice to Contractors for the Work is dated shall be considered as part of the Contract.

4-1.03 **SAMPLING AND TESTING OF MATERIALS.** Unless otherwise specified, all tests shall be performed in accordance with the methods used by the State

FOR COUNCIL ONLY NOT FOR CONSTRUCTION

Department of Transportation (Caltrans) and shall be made by the Director or his or her designated representative.

The State Department of Transportation has developed test methods for testing the quality of materials and Work. These test methods are identified by a California Test followed by the serial number. Copies of individual tests are available at the State Department of Transportation Laboratory, Sacramento, California, and will be furnished to interested persons upon request.

Whenever a reference is made in the Supplemental Conditions to a California Test by number, it shall mean the California test in effect on the day the Notice to Contractors for the Work is dated.

Whenever the Supplemental Conditions provide an option between two (2) or more test methods, the Director will determine the test method to be used.

Whenever a Supplemental Condition, manual, or test designation provides for test reports (such as certified mill test reports) from the manufacturer, copies of such reports, identified as to the lot of material, shall be furnished to the Director. The manufacturer's test reports shall supplement the inspection, sampling and testing provisions of this Section 4-1.03 and shall not constitute a waiver of the City's right to inspect. When material which cannot be identified with specific test reports is proposed for use, the Director may at his or her discretion, select random samples from the lot for testing. Testing specimens from the random samples, including those required for retest, shall be prepared in accordance with the referenced Supplemental Conditions and furnished by the Contractor at its expense. The number of such samples and test specimens shall be entirely at the discretion of the Director.

When requested by the Director, the Contractor shall furnish, without charge, samples of

FOR COUNCIL ONLY NOT FOR CONSTRUCTION

all material entering into the Work, and no material shall be used prior to approval by the Director, except as provided in Section 4-1.04, "Certificates of Compliance," of these General Conditions.

A. Inspection and Access for Testing. The Contractor shall provide safe access for the Director and his or her inspectors to adequately inspect the quality of Work and conformance with the General and Supplemental Conditions. The Contractor shall provide adequate lighting, ventilation, ladders and other protective facilities as may be necessary for the safe performance of inspections.

The Contractor shall submit samples or specimens of such materials to be furnished or used in the Work as the Director may require. The Contractor shall furnish the Director all necessary labor and facilities for such things as excavation in the compacted fill to depths required to take samples.

Inspections, tests, or favorable review by the Director or others shall not relieve the Contractor from its obligations to perform the Work in accordance with the requirements of the Contract Documents.

Work covered without the favorable review or consent of the Director shall, if required by the Director, be uncovered for examination at the Contractor's expense.

If the Engineer, Architect, or Director considers it necessary or advisable that covered Work be inspected or tested by others, the Contractor, at the Director's request, will uncover, expose or otherwise make available for observation, inspection or testing as the Director may require, that portion of the Work in question, furnishing all necessary labor, materials, tools, and equipment. If it is found that such Work is defective, the Contractor will bear all the expenses of such uncovering, exposure, observation, inspection and testing and of

FOR COUNCIL ONLY NOT FOR CONSTRUCTION

satisfactory reconstruction. If, however, such Work is not found to be defective and the Work was not covered without favorable review of the Director, the Contractor will be allowed an increase in the Contract Price or an extension of the Contract Time, or both, to cover its costs directly attributable to such uncovering, exposure, observation, inspection, testing, and reconstruction and an appropriate Change Order shall be issued.

Whenever the Contractor varies the period during which Work is carried on each Day, the Contractor shall give due notice to the Director so that proper inspection may be provided. Any Work done in the absence of the Director may be subject to rejection. Proper facilities for safe access for inspection to all parts of the Work shall at all times be maintained for the necessary use of the Director and other agents of the City. Authorized representatives and agents of the Director shall be permitted access to inspect all Work and materials wherever it is required for preparation of progress reports, and the Contractor shall provide proper facilities for such access and inspection.

It is the Contractor's responsibility to supervise the Work and complete the project in accordance with the Contract Documents. In the course of managing that effort, the Contractor shall generate its own punch lists as deemed necessary. The Director may prepare punch lists for the Director's own use in communicating with the Contractor; however, the Director shall be under no obligation to prepare punch lists for the Contractor. In general, the Director will prepare punch lists only after the Contractor has given the Director written notice that the subject Work is completed and tested in accordance with the Contract Documents and is ready for operation and/or use and/or occupancy. Failure of the Director to include an item in a punch list shall not relieve the Contractor of its duty to satisfactorily complete all Work required by the Contract Documents.

FOR COUNCIL ONLY NOT FOR CONSTRUCTION

Upon Final Completion of the construction Work and request by the Contractor, the Director will conduct a final inspection as a basis for recommending to the City that the Work be accepted.

B. Field and Materials Testing. Where the Supplemental Conditions require Work to be specially field tested or approved, it shall be tested only in the presence of the Director after timely notice of its readiness for inspection and test, and the Work after testing shall be covered up only upon the consent thereto of the Director.

The results of any tests made are for the information of the Director. Regardless of any test results, the Contractor is solely responsible for the quality of workmanship and materials and for compliance with the requirements of the Contract Drawings and Supplemental Conditions.

Except as specifically required under the Supplemental Conditions, all tests by the Director of materials furnished by the Contractor will be done in accordance with commonly recognized standards of national organizations. The Contractor shall furnish such samples of all materials as required by the Director without charge. No material shall be used unless it has been favorably reviewed by the Director.

Where such inspection and testing are to be conducted by an independent Laboratory or agency, the sample or samples of materials to be tested shall be selected by such Laboratory or agency, or the Director, and not by the Contractor.

C. Costs of Testing.

1. Initial Services: The City shall furnish and pay for all initial testing services required by the Contract Documents. When initial tests indicate non-compliance with the Contract Documents, the cost of initial tests associated with that non-compliance will be

FOR COUNCIL ONLY NOT FOR CONSTRUCTION

deducted by the City from the balance owed the Contractor. The Contractor shall furnish samples of materials for testing as may be required by the Director. Such samples shall be furnished without cost to the City.

2. Retesting: When initial tests indicate non-compliance with the Contract Documents, all subsequent retesting occasioned by the non-compliance shall be performed by the same testing Laboratory and the cost thereof will be deducted by the City from the balance owed the Contractor. Contractor shall be billed for each additional test.

3. Contractor Convenience Testing: Inspection or testing performed exclusively for the Contractor's convenience shall be the sole responsibility of the Contractor.

4. Additional Tests and Inspections: When in the opinion of the Director additional tests or inspections are required because of the manner in which the Contractor executes its Work, such tests and inspections shall be paid for by the City, but will be deducted from the Contract Price. Examples of such tests and inspections are tests of materials substituted for previously accepted materials or substituted for specified materials, retests made necessary by failure of material to comply with the requirements of the Specifications, load tests made necessary because of portions of the structure not fully meeting Specifications or plan requirements, etc.

4-1.04 **CERTIFICATES OF COMPLIANCE.** A Certificate of Compliance shall be furnished prior to the use of any materials for which the Supplemental Conditions require that such a Certificate be furnished. In addition, the Director may permit the use of certain materials or assemblies prior to sampling and testing if accompanied by a Certificate of Compliance. The Certificate shall be signed by the manufacturer of the material or the manufacturer of assembled materials and shall state that the materials involved comply in all

FOR COUNCIL ONLY NOT FOR CONSTRUCTION

respects with the requirements of the Supplemental Conditions. A Certificate of Compliance shall be furnished with each lot of such materials delivered to the Work and the lot so certified shall be clearly identified in the Certificate.

All materials used on the basis of a Certificate of Compliance may be sampled and tested at any time. The fact that material is used on the basis of a Certificate of Compliance shall not relieve the Contractor of responsibility for incorporating material in the Work which conforms to the requirements of the Contract Documents and any such material not conforming to such requirements will be subject to rejection whether in place or not.

The Department reserves the right to refuse to permit the use of material on the basis of a Certificate of Compliance.

The form of the Certificate of Compliance and its disposition shall be as directed by the Director.

FOR COUNCIL ONLY NOT FOR CONSTRUCTION

SECTION 5

LEGAL RELATIONS AND RESPONSIBILITY

5-1.01 **LAWS TO BE OBSERVED.** The Contractor shall keep informed of and observe, and comply with and cause all of its agents and employees to observe and comply with, all prevailing Federal and State laws, and rules and regulations made pursuant to said Federal and State laws, and county and municipal ordinances, and regulations, which in any way affect the conduct of the Contract. If any conflict arises between provisions of the Contract and any such law above referred to, the Contractor shall notify the Director at once in writing. To the fullest extent allowed by law, the Contractor shall defend, indemnify, and save and hold harmless the City or any of its officers, agents, employees, and volunteers against any claim or liability arising from or based on the violation of any such law, rule, or regulation, whether by itself or its agents or employees.

5-1.02 **HOURS OF LABOR.** Eight (8) hours labor constitutes a legal Day's work. The Contractor or Subcontractor shall, as a penalty to City, forfeit Twenty-five Dollars ($25) for each worker employed in the execution of the contract by the respective Contractor or Subcontractor for each calendar day during which such worker is required or permitted to work more than eight (8) hours in any one (1) calendar day and forty (40) hours in any one (1) calendar week in violation of the provisions of the Labor Code, and in particular, Section 1810 to Section 1815, thereof, inclusive, except that Work performed by employees of Contractors in excess of eight (8) hours per day, and forty (40) hours during any one (1) week, shall be permitted upon public work upon compensation for all hours worked in excess of eight (8) hours per day at not less than one and one-half (1-1/2) times the basic rate of pay, as provided in said

FOR COUNCIL ONLY NOT FOR CONSTRUCTION

Section 1815. In addition, Contractor and/or its Subcontractors may be required to pay double the basic rate of pay for all hours worked in excess of twelve (12) hours in any workday and under other circumstances. (See California Code of Regulations, Title 8, Sections 16100(c)(6) and (16200(a)(3)(F) and applicable Department of Industrial Relations prevailing wage determinations.)

5-1.03 **NONDISCRIMINATION.**

A. Attention is directed to Labor Code Section 1735, which reads as follows:

"A contractor shall not discriminate in the employment of persons upon public works on any basis listed in subdivision (a) of Section 12940 of the Government Code, as those bases are defined in Sections 12926 and 12926.1 of the Government Code, except as otherwise provided in Section 12940 of the Government Code. Every Contractor for public works who violates this section is subject to all the penalties imposed for a violation of this chapter."

B. During the performance of this Contract, Contractor and its Subcontractors shall not unlawfully discriminate against any employee or applicant for employment because of race, religious creed, color, national origin, ancestry, physical disability, mental disability, medical condition, genetic information, marital status, sex, gender, gender identity, gender expression, age, sexual orientation, or military and veteran status. The Contractor and Subcontractors shall insure that the evaluation and treatment of their employees and applicants for employment are free of such discrimination. The Contractor and Subcontractors shall comply with the provisions of the California Fair Employment and Housing Act (Government Code §12900, et seq.) and the applicable regulations promulgated thereunder (California Code of Regulations, Title 2, §7285.0 et seq.) and other applicable State and Federal regulations and City

FOR COUNCIL ONLY NOT FOR CONSTRUCTION

policies pertaining to nondiscrimination and affirmative action which are incorporated into this Agreement by reference and made a part hereof as if set forth in full. The Contractor and its Subcontractors shall give written notice of their obligations under this clause to labor organizations with which they have a collective bargaining or other agreement.

C. Contractor shall include the nondiscrimination and compliance provisions of this clause in all subcontracts to perform Work under the agreement.

5-1.04 **PREVAILING WAGE.** The Contractor and any Subcontractor shall comply with Labor Code Sections 1770 et seq. In accordance with said Section 1775 the Contractor and any Subcontractor under the Contractor shall, as a penalty, forfeit to the state or City not more than $200 for each calendar day or portion thereof, for each worker paid less than the prevailing rate as determined by the Director of Industrial Relations for the work or craft in which such worker is employed for under the Contract by the Contractor or by any Subcontractor under the Contractor.

The amount of the penalty shall be determined by the Labor Commissioner based on consideration of both of the following: (a) whether the failure to pay the correct rate of per diem wages was a good-faith mistake and, if so, whether the error was promptly and voluntarily corrected when brought to the attention of the Contractor or Subcontractor; and (b) whether the Contractor or Subcontractor has a prior record of failing to meet its prevailing wage obligations.

The penalty may not be less than forty dollars ($40) for each calendar day, or portion thereof, for each worker paid less than the prevailing wage rate, unless the failure of the Contractor or Subcontractor to pay the correct rate of per diem wages was a good faith mistake and, if so, the error was promptly and voluntarily corrected when brought to the attention of the Contractor or Subcontractor.

FOR COUNCIL ONLY NOT FOR CONSTRUCTION

The penalty may not be less than eighty dollars ($80) for each calendar day, or portion thereof, for each worker paid less than the prevailing wage rate, if the Contractor or Subcontractor has been assessed penalties within the previous three (3) years for failing to meet its prevailing wage obligations on a separate contract, unless those penalties were subsequently withdrawn or overturned.

The penalty may not be less than one hundred twenty dollars ($120) for each calendar day, or portion thereof, for each worker paid less than the prevailing wage rate, if the Labor Commissioner determines that the violation was willful, as defined in subdivision (c) of Section 1777.1 of the Labor Code.

If the amount due under this section is collected from the Contractor or Subcontractor, any outstanding wage claim under Chapter 1 (commencing with Section 1720) of Part 7 of Division 2 of the Labor Code against the Contractor or Subcontractor shall be satisfied before applying that amount to the penalty imposed on that Contractor or Subcontractor pursuant to this section.

The determination of the Labor Commissioner as to the amount of the penalty shall be reviewable only for an abuse of discretion.

In addition to said penalty, the difference between such stipulated prevailing wage rates and the amount paid to each worker for each calendar day or portion thereof for which each worker was paid less than the stipulated prevailing wage shall be paid to each worker by the Contractor or Subcontractor.

If a worker employed by a Subcontractor on a public works project is not paid the general prevailing per diem wages by the Subcontractor, the Contractor is not liable for any penalties described above unless the Contractor had knowledge of that failure of the Subcontractor to pay

FOR COUNCIL ONLY NOT FOR CONSTRUCTION

the specified prevailing rate of wages to those workers or unless the Contractor fails to comply with all of the following requirements:

1. The contract executed between the Contractor and the Subcontractor for the performance of work on the public works project shall include a copy of the provisions of Sections 1771, 1776, 177.5, 1813, and 1815 of the Labor Code.
2. The Contractor shall monitor the payment of the specified general prevailing rate of per diem wages by the Subcontractor to the employees, by periodic review of the certified payroll records of the Subcontractor.
3. Upon become aware of the Subcontractor's failure to pay its workers the specified prevailing rate of wages, the Contractor shall diligently take corrective action to halt or rectify the failure, including, but not limited to, retaining sufficient funds due the Subcontractor for work performed on the public works project.
4. Prior to making final payment to the Subcontractor for work performed on the public works project, the Contractor shall obtain an affidavit signed under penalty of perjury from the Subcontractor that the Subcontractor has paid the specified general prevailing rate of per diem wages to its employees on the public works project and any amount due pursuant to 1813 of the Labor Code.

Pursuant to Section 1775 of the Labor Code, the Division of Labor Standards Enforcement shall notify the Contractor on a public works project within fifteen (15) Days of the receipt by the Division of Labor Standards Enforcement of a complaint of the failure of a Subcontractor on that public works project to pay workers the general prevailing rate per diem wages.

Pursuant to the provisions of California Labor Code Section 1773, the City has obtained

FOR COUNCIL ONLY NOT FOR CONSTRUCTION

the general prevailing rate of wages applicable to the categories of workers the City anticipates will be utilized for this project for straight time, overtime, Saturday, Sunday, and holiday Work. The holiday wage rate listed shall be applicable to all holidays recognized in the collective bargaining agreement of the particular craft, classification or type of worker concerned or, if no collective bargaining applies, those holidays identified in Government Code Section 6700. These wage rates may be obtained from the State Department of Industrial Relations and/or the following website address: http://www.dir.ca.gov/dlsr/DPreWageDetermination.htm, which is incorporated herein as a part of this Contract.

Pursuant to Labor Code Section 1773.2, the general prevailing wage rates set forth above, which forms a part of this Contract, shall be posted by the Contractor at a prominent place at the site of the Work.

Pursuant to Labor Code Section 1773.6 and California Code of Regulations Section 16204, Title 8, changes in general prevailing wage determinations shall apply to the project only if issued by the Director of Industrial Relations prior to the City's bid issuance date.

The City will not recognize any claim for additional compensation because of the payment by the Contractor of any wage rate in excess of the prevailing wage rate set forth in the Contract. The possibility of wage increases is one of the elements to be considered by the Contractor in determining its Bid, and will not under any circumstances be considered as the basis of a claim against the City or Contract.

When both California and Federal prevailing wage rates apply, the Contractor and any Subcontractors shall pay their workers the higher of the two rates. The Contractor and any Subcontractors shall insert this clause in any lower tier contract.

5-1.05 **REGISTRATION REQUIRED AS QUALIFICATION TO BID.**

FOR COUNCIL ONLY NOT FOR CONSTRUCTION

Pursuant to Labor Code Section 1771.1(b), notice is hereby given that a Contractor or Subcontractor shall not be qualified to bid on, be listed in a bid proposal, subject to the requirements of Section 4104 of the Public Contract Code, or engage in the performance of any contractor for public work, as defined in Labor Code Sections 1720, et seq., unless currently registered and qualified to perform public work pursuant to Labor Code Section 1725.5. It is not a violation of Labor Code Section 1771.1 for an unregistered contractor to submit a bid that is authorized by Section 7029.1 of the Business and Professions Code or by Section 10164 or 20103.5 of the Public Contract Code, provided the contractor is registered to perform public work pursuant to Section 1725.5.

5-1.06 **PAYROLL RECORDS.** The Contractor's attention is directed to the following provisions of Labor Code Section 1776. The Contractor shall be responsible for the compliance with these provisions by its Subcontractors.

A. The Contractor and each Subcontractor shall keep accurate and current payroll records, showing the name, address, social security number, work classification, straight time and overtime hours worked each day and week, and the actual per diem wages paid to each journeyman, apprentice, worker, or other employee employed by it in connection with the public work. Each payroll record shall contain or be verified by a written declaration that is made under penalty of perjury, stating both of the following:

1. The information contained in the payroll record is true and correct.

2. The employer has complied with the requirements of Section 1771, 1811, and 1815 for any work performed by his or her employees on the public works project.

B. The payroll records enumerated under subdivision (A) shall be available for inspection at all reasonable hours at the principal office of the Contractor on the following

FOR COUNCIL ONLY NOT FOR CONSTRUCTION

basis:

1. A certified copy of an employee's payroll record shall be made available for inspection or furnished to such employee or his or her authorized representative on request.

2. A certified copy of all payroll records enumerated in subdivision (A) shall be made available for inspection or furnished upon request to a representative of the City, the Division of Labor Standards Enforcement, and the Division of Apprenticeship Standards of the Department of Industrial Relations. The City reserves the right to withhold any progress payments to the Contractor in the event of noncompliance with the subsection.

3. A certified copy of all payroll records enumerated in subdivision (A) shall be made available upon request by the public for inspection or for copies thereof. However, a request by the public shall be made through either the City, the Division of Apprenticeship Standards, or the Division of Labor Standards Enforcement. The public shall not be given access to such records at the principal office of the Contractor.

C. The certified payroll records shall be on forms provided by the Division of Labor Standards Enforcement or shall contain the same information as the forms provided by the Division.

D. Each Contractor shall file a certified copy of the records enumerated in subdivision (A) with the entity that requested the records within ten (10) Days after receipt of a written request.

E. Any copy of the records made available for inspection as copies and furnished upon request to the public or any public agency by the City, the Division of Apprenticeship Standards or the Division of Labor Standards Enforcement shall be marked or

FOR COUNCIL ONLY NOT FOR CONSTRUCTION

obliterated to prevent disclosure of an individual's name, address and social security number. The name and address of the Contractor awarded the Contract or Subcontractor performing the Contract shall not be marked or obliterated. Any copy of records made available for inspection by, or furnished to, a joint labor-management committee established pursuant to the federal Labor Management Cooperation Act of 1978 (Section 175a of Title 29 of the United States Code) shall be marked or obliterated only to prevent the disclosure of an individual's name and social security number. A joint labor-management committee may maintain an action in a court of competent jurisdiction against an employer who fails to comply with Section 1774. The court may award restitution to an employee for unpaid wages and may award the joint labor-management committee reasonable attorneys' fees and costs incurred in maintaining the action. An action under this subdivision may not be based on the employer's misclassification of the craft of a worker on its certified payroll records. Nothing in this subdivision limits any other available remedies for a violation of this section.

F. The Contractor shall inform the City of the location of the records enumerated under subdivision (A), including the street address, city and county, and shall, within five (5) business days, provide a notice of a change of location and address.

G. The Contractor shall have ten (10) Days in which to comply subsequent to receipt of written notice requesting the records enumerated in subdivision (A). In the event that the Contractor or Subcontractor fails to comply within the ten (10) Day period, the Contractor shall, as a penalty to the State or City, forfeit twenty-five ($25) Dollars for each calendar day, or portion thereof, for each worker, until strict compliance is effectuated. Upon the request of the Division of Apprenticeship Standards or the Division of Labor Standards Enforcement, these penalties shall be withheld from any progress payment or final payment then due. A contractor

FOR COUNCIL ONLY NOT FOR CONSTRUCTION

is not subject to a penalty assessment pursuant to this section due to the failure of a Subcontractor to comply with this section.

5-1.07 **SAFETY REQUIREMENTS.** It is the intent of the parties that the City is not an exposing, creating, controlling, or correcting employer under California Labor Code Section 6400. In accordance with generally accepted construction practices and State law, the Contractor shall have the authority and be solely and completely responsible for conditions on the Work Site, including safety of all persons and property during performance of the Work. Moreover, the Contractor shall be the controlling employer and has the authority and responsibility to enforce Work Site safety. The Contractor shall be responsible for conducting daily safety inspections and assuring all hazards and violations are abated. The Contractor is responsible for assuring that all Subcontractors adhere to the minimum Cal/OSHA safety requirements and that each Subcontractor has an effective Cal/OSHA IIPP (Illness and Injury Prevention Program) in place that specifically addresses all potential exposures, such as, but not limited to, fall protection, confined space, and trenching/shoring. These requirements shall apply continuously and not be limited to normal working hours. The Contractor shall be responsible for any delay costs or damages in the event the progress of Work is slowed or stopped due to a safety violation.

The Contractor shall designate a safety officer and have in place a health and safety plan in accordance with the laws of State of California and conduct safety meetings and document them in accordance with the law. The Contractor shall have the safety record available for inspection during working hours and shall submit job site safety meeting reports with each Application for Payment.

Prior to Contractor commencing construction project work on City property, Contractor

FOR COUNCIL ONLY NOT FOR CONSTRUCTION

shall make available copies of its Health and Safety Plan (HASP) that meets or exceeds applicable Cal/OSHA regulations. The Contractor's HASP shall also meet or exceed the requirements of any applicable City-wide or departmental specific Injury and Illness Prevention Programs (IIPP) and other HASP programs, procedures, and plans. Potentially applicable HASP programs, procedures, and plans include, but are not limited to, the following:

1. Bloodborne Pathogens Exposure Control Plan;
2. Confined Space Entry Procedure;
3. Electrical Safety Program (Lockout/Tagout);
4. Emergency Action Plans (Site Specific);
5. Fire Prevention Plans (Site Specific);
6. Hazardous Waste Operations Emergency Response Plan (or Equivalent);
7. Hazard Communication Program (SDS's and Right-to-Know training);
8. Heat Illness & Prevention Plan;
9. Hearing Conservation Program;
10. Hot Work/Welding Procedure;
11. Job Hazard Analyses/Standard Operating Procedures;
12. Traffic Control & Flagging;
13. Excavation/Dig Safe Procedure;
14. Fall Protection Plan;
15. Personal Protective Equipment Plan;
16. Respirable Crystalline Silica Exposure Control Plan;
17. Respirator Program;
18. Soils Management Plan (for contaminated soils); and

FOR COUNCIL ONLY NOT FOR CONSTRUCTION

19. Transite (Asbestos) Pipe Work Procedure.

Additionally, Contractor shall be responsible for complying with all City-wide and departmental specific safety requirements as identified in the Supplemental Conditions or presented at a pre-construction meeting.

Contractor shall inform City in advance of the quantity of chemical(s) to be used for the project and the total quantity of chemical(s) that will be brought onto City property. In addition, Contractor shall provide City with one copy of the Safety Data Sheet (SDS) for each chemical expected to be used to complete the project and for each chemical brought to the Work Site, regardless of whether such chemicals are ultimately used for the project.

The services of the Director in conducting construction review of the Contractor's performance is not intended to include review of the adequacy of the Contractor's Work methods, equipment, bracing or scaffolding, or safety measures, in, on, or near the construction site. If a City employee observes a safety violation, the City employee will report the violation to the Contractor who is then responsible for assuring the violation is abated.

The Contractor is hereby informed that Work on this project could be hazardous. The Contractor shall carefully instruct all personnel working in potentially hazardous Work areas as to potential dangers and shall provide such necessary safety equipment and instructions as are necessary to prevent injury to personnel and damage to property. Special care shall be exercised relative to Work underground.

All Work and materials shall be in strict accordance with all applicable State, City, County, and Federal Rules, Regulations, and Codes, and attention is drawn to the requirements of Cal/OSHA. The Contractor shall be solely responsible for compliance with all City, County and State blasting requirements and for any damages caused by its operations.

FOR COUNCIL ONLY NOT FOR CONSTRUCTION

To ensure compliance with California Labor Code Section 6705, the Contractor shall submit to the City, at least five (5) Days in advance of excavation of any trench five feet (5') or more in depth, Working Drawings to the Director showing the design of shoring, bracing, sloping and other provisions to be made for worker protection from the hazard of caving ground during the excavation of such trench or trenches. If such Working Drawings vary from the shoring system standards established by the Cal/OSHA Construction Safety Orders of the Division of Industrial Safety, the plan shall be prepared and signed by a registered civil or structural engineer in the State of California. This in no way relieves the Contractor from the requirement of maintaining safety in all operations performed by the Contractor or the Contractor's Subcontractors and nothing in this section shall be deemed to allow the use of a shoring, sloping or protective system less effective than that required by the Cal/OSHA Construction Safety Orders of the Division of Industrial Safety Contractor's Working Drawings shall be subject to approval insofar as the details affect the character of the finished Work and for compliance with design requirements applicable to the construction when specified or called for, but details of the design will be left to Contractor who shall be responsible for the successful construction of the Work. The City shall approve Working Drawings before any Work involving such drawings is performed. Approval and/or acceptance by the City or its designated agent only constitutes acknowledgment of the submission and does not constitute review or approval of the designs, design assumptions or criteria, completeness of submissions, applicability to areas of intended use, nor implementation of the plans, which are solely the responsibility of the Contractor and its registered engineer.

The Contractor shall perform its Work as not to expose personnel to, or to discharge into the atmosphere from any source whatever, smoke, dust, asbestos, toxic chemicals or other air

FOR COUNCIL ONLY NOT FOR CONSTRUCTION

contaminants in violation of the laws, rules, and regulations of the governmental entities having jurisdiction and shall bear full and exclusive responsibility for any release of hazardous or non-hazardous chemicals or substances during the course of the Work. The Contractor shall immediately report any such release to the City. The Contractor shall be solely responsible for all claims and expenses associated with the response to, removal and remediation of the release, including, without limitation, payment of any fines or penalties levied against the City by any agency as a result of such release and shall defend, indemnify, and save and hold harmless the City, its officers, agents, employees, and volunteers from any claims arising from such release. For purposes of this section only, the term "claims" shall include:

1. All notices, orders, directives, administrative or judicial proceedings, fines, penalties, fees, or charges imposed by any governmental agency with jurisdiction; and

2. Any claim, cause of action, or administrative or judicial proceeding brought against the City, its officers, agents, employees, and volunteers for any loss, cost (including reasonable attorneys' fees), damage or liability, sustained or suffered by any person or entity, including the City.

If the performance of the Work creates any hazardous wastes, those wastes shall be properly disposed of according to federal, state, and local laws, at the expense of the Contractor. The Contractor shall dispose of the wastes under its own EPA Generator Number. In no event shall the City be identified as the generator. The Contractor shall notify the City of any such hazardous wastes and the City reserves the right to a copy of the results of any tests conducted on the wastes, and, at its cost, to perform additional tests or examine those wastes, prior to disposition. The Contractor shall defend, indemnify, and save and hold harmless the City, its

FOR COUNCIL ONLY NOT FOR CONSTRUCTION

officers, agents, employees, and volunteers from any claims arising from the disposal of the hazardous wastes, regardless of the absence of negligence or other malfeasance by the Contractor. Disposal of all Hazardous Materials must be done in accordance with all laws and regulations. Copies of required regulatory documentation including copies of final manifests shall be supplied to the City.

Contractors or Subcontractors removing one hundred or more square feet (100') of asbestos must be "Certified" in accordance with State law. All Work involving exposure to asbestos and all other hazardous materials shall be performed with protection of personnel in compliance with all applicable regulations and safety requirements including, but not limited to, California Code of Regulations Section 1529, Title 8.

Nothing in these General Conditions is to be construed to permit Work not conforming to governing codes. When Contract Documents differ from governing codes, the Contractor shall furnish and Install the higher standards called for without extra charge.

5-1.08 **SUBSURFACE EXCAVATIONS, NOTIFICATION.** The Contractor shall contact the regional notification center, "Underground Service Alert," and schedule its Work to allow ample time for the center to notify its members and, if necessary, for any member to field locate and mark its facilities. Without limiting the foregoing, the Contractor's attention is directed to Government Code Sections 4216 to 4216.9, and in particular Section 4216.2.

5-1.09 **PUBLIC SAFETY.** The Contractor shall assume all responsibility for public safety during the performance of its Work, and all costs arising therefrom shall be included in the Contract Price. Whenever the Contractor's operations create a condition hazardous to traffic or to the public, it shall furnish, erect and maintain, at its expense, such fences, barricades, lights, signs, and other devices and take such other protective measures as are

FOR COUNCIL ONLY NOT FOR CONSTRUCTION

necessary to prevent accidents or damage or injury to the public. The Contractor shall establish the pedestrian detours with comparable lighting to the original pedestrian areas. The Contractor shall arrange for such flaggers as are necessary to give adequate warning to traffic or to the public of any dangerous conditions affecting traffic. For Work in a public right-of-way, the Contractor shall comply with the rules and regulations of the State, County, or local agency that owns the right-of-way.

The Contractor shall promptly and fully comply with and carry out, and shall without separate charge therefor to the City, all safety and first aid requirements prescribed by all applicable Federal, State, and local laws and regulations, rules, and orders. The Work shall be done in a safe manner; and the Contractor shall safeguard the safety and health of its employees, Subcontractors, and the people of local communities. The Contractor shall also be reasonable for ensuring that its Subcontractors comply with the provisions of this section.

Upon the failure of the Contractor to comply with any of the requirements of this section, the City shall have the authority, but not the duty, to stop the Work until such failure is remedied. The Contractor shall not be entitled to an adjustment of the Contract Time or an increase in the Contract Price due to any such suspensions.

When required by the Contract Documents, the Contractor shall construct, maintain, and remove detours for use of public traffic, without additional cost to the City, unless separate payment is specified in the Special Provisions.

The failure or refusal of the Contractor to construct and maintain detours at the proper time shall be sufficient cause for closing down the work until such detours are in satisfactory condition for use by public traffic.

Due care shall be exercised to avoid injury to existing improvements or facilities, utility

FOR COUNCIL ONLY NOT FOR CONSTRUCTION

facilities, adjacent property and trees, shrubs, and other plants that are not to be removed.

Trees, shrubs and other plants that are not to be removed, and pole lines, fences, signs, survey markers and monuments, buildings and structures, conduits, pipe lines, sewer and waterlines, highway facilities, and any other improvements or facilities, under or above ground, that are within or adjacent to the work limit line shall be protected from injury or damage, and the Contractor shall provide and Install suitable safeguards to protect such objects from injury or damage. If such objects are injured or damaged by reason of the Contractor's operations, they shall be replaced or restored at the Contractor's expense. The facilities shall be replaced or restored to a condition as good as when the Contractor entered upon the Work Site, or as good as required by the Contract Documents if any such objects are part of the Work. The City may make or cause to be made such temporary repairs as are necessary to restore to service any damaged facility. The cost of such repairs shall be borne by the Contractor, and the costs may be deducted from any monies due or to become due to the Contractor under the Agreement.

The fact that any underground facilities is not shown on the Contract Drawings shall not relieve the Contractor of its responsibility pursuant to "Utility Facilities" in Section 2-1.12 elsewhere in the Contract Documents. It shall be the Contractor's responsibility, pursuant thereto, to ascertain the location of such underground improvements or facilities, which may be subject to damage by reason of its operations.

Full compensation for furnishing all labor, materials, tools, equipment and incidentals, and for doing all the Work involved in protecting or repairing property as specified in this section, shall be considered as included in the prices paid for the various Contract items of work and no additional compensation will be allowed therefor.

5-1.10 **EMERGENCIES.** In an Emergency affecting the safety of life, the

FOR COUNCIL ONLY NOT FOR CONSTRUCTION

Work, or adjoining property, the Contractor, without special instructions or authorization from the City, shall act at its discretion to prevent such threatened loss or injury. In such an Emergency, the Contractor may perform such additional work as is reasonably required. Any compensation claimed by the Contractor on account of Work performed to an Emergency shall be determined in accordance with the provisions relating to Force Account payment contained elsewhere in the Contract Documents.

5-1.11 **APPRENTICES.** Attention is directed to Labor Code Sections 1777.5, 1777.6 and 1777.7 and Title 8, California Code of Regulations Section 200 et seq. In accordance with Section 1777.5, the Contractor shall secure the necessary certificates and shall contribute to the apprenticeship fund or funds, a provided therein. The Contractor shall require each Subcontractor who will perform work or labor or render service to the Contractor in or about the construction of the work to fully comply with Sections 1777.5 and 1777.6 of the Labor Code. To insure compliance and complete understanding of the law regarding apprentices, and specifically the required ratio thereunder, each Contractor or Subcontractor should, where some questions exist, contact the Division of Apprenticeship Standards, , or one of its branch offices prior to commencement of Work on the public works Contract. Responsibility for compliance with this section lies with the prime Contractor.

It is State and City policy to encourage the employment and training of apprentices on public works Contracts as may be permitted under local apprenticeship standards.

5-1.12 **FAIR LABOR STANDARDS ACT.** Attention is invited to the fact that the City has been advised by the Wage and Hour Division, U.S. Department of Labor, that Contractors engaged in construction Work are required to meet the provisions of the Fair Labor Standards Act of 1958 and as amended (52 Stat. 1060).

FOR COUNCIL ONLY NOT FOR CONSTRUCTION

5-1.13 **WORKERS' COMPENSATION.** Pursuant to the requirements of Labor Code Section 1860, the Contractor will be required to secure the payment of workers' compensation to its employees in accordance with the provisions of Labor Code Section 3700.

Prior to the commencement of Work, the Contractor shall sign and file with the Director a certification in the following form:

> "I am aware of the provisions of Labor Code Section 3700 which require every employer to be insured against liability for workers' compensation or to undertake self-insurance in accordance with the provisions of that code, and I will comply with such provisions before commencing the performance of the Work of this Contract."

5-1.14 **AIR POLLUTION CONTROL AND ASBESTOS.** The Contractor shall comply with all air pollution control rules, regulations, ordinances and statutes which apply to any Work performed pursuant to the Contract, including any air pollution control rules, regulations, ordinances and statues, specified in Government Code Section 11017.

In the absence of any applicable air pollution control rules, regulations, ordinances or statutes governing solvents, all solvents, including but not limited to the solvent portions of paints, thinners, curing compounds, and liquid asphalt used on the project shall comply with the applicable material requirements of the applicable Air Quality Management District. All containers of solvent, paint, thinner, curing compound, or liquid asphalt shall be labeled to indicate that the contents fully comply with said requirements.

Unless otherwise provided in the Supplemental Conditions, material to be disposed of shall not be burned, either inside or outside the Premises.

The Contractor shall also comply with all rules, regulations, statutes and ordinances

FOR COUNCIL ONLY NOT FOR CONSTRUCTION

regarding asbestos removal and disposal, including but not limited to, 42 U.S.C. Sections 7401, 7412 and 7601, 40 C.F.R. Part 61, Subpart M, and California Code of Regulations Section 1529, Title 8.

If the Contractor discovers that a building to be demolished or renovated contains asbestos containing material, the Contractor shall immediately cease Work and notify the City.

5-1.15 **USE OF PESTICIDES.** The Contractor shall comply with all local, state and federal rules and regulations of the Department of Food and Agriculture, the Department of Health, the Department of Industrial Relations and all other agencies which govern the use of pesticides required in the performance of the Work.

Pesticides shall include but shall not be limited to herbicides, insecticides, fungicides, rodenticides, germicides, nematocides, bactericides, inhibitors, fumigants, defoliants, desiccants, soil sterilants, and repellents.

Any substance or mixture of substances intended for preventing, repelling, mitigating, or destroying weed, insects, diseases, rodents, or nematodes and any substance or mixture of substances intended for use as a plant regulator, defoliant or desiccant shall be considered as pesticide.

5-1.16 **SOUND AND LIGHT CONTROL REQUIREMENTS.** The Contractor shall comply with all local sound control, light control, and noise level rules, regulations and ordinances which apply to any Work performed pursuant to the Contract. Work shall not begin before 7 a.m. nor occur after 7 p.m., unless otherwise permitted by the City.

Each internal combustion engine, used for any purpose on the Work or related to the Work, shall be equipped with a muffler, in good working order, of a type recommended by the manufacturer. No internal combustion engine shall be operated on the project without said

FOR COUNCIL ONLY NOT FOR CONSTRUCTION

muffler.

5-1.17 **WEIGHT LIMITATIONS.** Unless expressly permitted elsewhere in the Contract Documents, the Contractor shall not operate construction equipment or vehicles of any kind which, laden or unladen, exceed the maximum weight limits set forth in Division 15 of the Vehicle Code over completed or existing base, surfacing, pavement or structures.

5-1.18 **ENVIRONMENTAL CLEARANCES; MITIGATION MONITORING PROGRAMS; AND REGULATORY AGENCY PERMIT REQUIREMENTS.** The Department will obtain all environmental clearances and other authorizations necessary for this project as set forth in the Contract Documents. The Contractor shall comply with the provisions, including giving notices during construction when required, of said authorizations. In the event the obtaining of said authorizations delays completion of all or any portion of the Work, an extension of time determined pursuant to the provisions in Section 6-1.08, "Liquidated Damages," of these General Conditions will be granted.

Contractor shall comply with: (1) all mitigation identified in the mitigation monitoring program (attached to and adopted as a component of the mitigated negative declaration or Environmental Impact Report) to mitigate impacts to protected natural resources; and (2) all related permit requirements issued by the regulatory agencies authorizing the project. Contractor shall defend, indemnify, and save and hold harmless the City, its officers, agents, employees, and volunteers from any fines, claims, suits, actions or regulatory sanctions of every name, kind and description brought forth, or on account of, damage to protected natural resources from or arising out of Contractor's negligence or willful misconduct in the performance of this Agreement.

5-1.19 **PERMITS AND LICENSES.** The Contractor acknowledges and agrees that, prior to the submission of its bid for the Work, it fully familiarized itself with the

FOR COUNCIL ONLY NOT FOR CONSTRUCTION

requirements of all applicable federal, state, county and municipal laws, codes, rules, and regulations, as well as the conditions of any required licenses and permits.

The Contractor shall procure all permits and licenses, including any applicable building permits (except those procured or to be procured by the City which are listed elsewhere in the Contract Documents), in coordination with the Director, pay all charges and fees, and give all notices necessary and incident to the due and lawful prosecution of the Work. Contractor shall be responsible for applying, paying all fees, and coordination for obtaining all permits for completion of the Work. All permits and licenses shall be obtained in sufficient time to prevent delays to the Work. Contractor will apply to the City for reimbursement for such permits costs. Accordingly, Contractor should not include the anticipated costs for permits in its bid, as the necessary permit costs will be reimbursed by the City.

The California Environmental Quality Act (Public Resources Code, Section 21000 to 21177) may be applicable to permits, licenses and other authorizations which the Contractor must obtain from State or local agencies in connection with performing the Work. The Contractor shall comply with the provisions of that Act in obtaining such permits, licenses and other authorizations, and all permits, licenses and other authorizations shall be obtained in sufficient time to prevent delays to the Work.

The Contractor shall maintain the applicable Contractor's license as identified in the Notice to Contractors and City business license for the duration of the Work.

5-1.20 **WATER POLLUTION.** The Contractor shall comply with all water pollution control rules, regulations, ordinances and statutes which apply to any Work performed pursuant to the Contract, including any water pollution control rules, regulations, and statutes, specified by the most current State of California NPDES General Permit for Stormwater

FOR COUNCIL ONLY NOT FOR CONSTRUCTION

Discharges Associated with Construction Activity.

The Contractor shall take all necessary precaution to protect streams, vernal pools, ponds, reservoirs, and lakes from pollution with fuels, oils, bitumen, calcium chloride, and other harmful materials as consistent with the law. Also, the Contractor shall conduct and schedule operations so as to avoid discharging pollutants, such as but not limited to: sediment and silt to the storm drain system. The storm drain system consists of all facilities that are designed to convey stormwater to the Waters of the State as defined in the California Water Code. The storm drain system includes, but is not limited to, all streets, gutters, drain inlets, roadside ditches, streams, vernal pools, ponds, and lakes. Care shall be exercised to preserve roadside vegetation beyond the limits of construction.

5-1.21 **PROTECTION AND USE OF PROPERTY.** The Contractor shall be responsible for and provide and maintain all proper temporary walkways, covered walkways, barriers, roads, guards, railings, lights, warning signs, and take precaution at all times to avoid injury or damage to any person or any property, and upon completion of the Work, or at other times as directed, restore Premises and adjacent property to a proper condition. In the event of such injury or damage, Contractor shall report such injury and damage to City within forty-eight (48) hours of occurrence.

The Contractor shall protect adjoining property and nearby buildings, including City buildings, City roads, and public streets or roads, from dust, dirt, debris, or the nuisance arising out of the Contractor's operations or storage practices, and, if ordered by the Director, the Contractor shall provide and Install suitable safeguards, approved by the Director, to protect such objects from damage. If such objects are damaged by reason of the Contractor's operations, they shall be replaced or restored at the Contractor's expense.

FOR COUNCIL ONLY NOT FOR CONSTRUCTION

If the Contractor damages any buildings, roads, utilities, or other property which belong to the City, or any Department or agency thereof, then the Director, at his or her option, may retain from the money due under the Contract an amount sufficient to insure repair of the damage.

The Director may make or cause to be made such temporary repairs as are necessary to restore to service any such damaged facility. The cost of such repairs shall be borne by the Contractor and may be deducted from any moneys due or to become due the Contractor under the Contract.

5-1.22 **RESPONSIBILITY FOR DAMAGE AND INDEMNIFICATION.**

The City of Roseville, its officers, agents, employees, and volunteers, including but not limited to the Director and his or her designee, shall not be answerable or accountable in any manner: for any loss or damage that may happen to the Work or any part thereof; for any loss or damage to any of the materials or other things used or employed in performing the Work; for injury to or death of any person, either workers or the public; or for damage to property from any cause which might have been prevented by the Contractor, its workers, or anyone employed by the Contractor or the Contractor's Subcontractors.

The Contractor shall be responsible for any liability imposed by law and for injuries to, or death of, any person including, but not limited to, workers and the public, or damage to property resulting from defects or obstructions, or from any cause whatsoever during the progress of the Work or at any time before its completion and final Acceptance.

To the fullest extent allowed by law, the Contractor shall defend (through counsel acceptable to the City), indemnify, and save and hold harmless the City, and its respective officers, agents, Subcontractors, employees, and volunteers, and the successors and assigns of

FOR COUNCIL ONLY NOT FOR CONSTRUCTION

any of them, (hereinafter referred to as "Indemnitees") from and against all claims, demands, liability, suits, actions, costs or expenses for any and all loss or damage, including but not limited to, personal injury, property damage, or economic loss, arising out of or resulting from allegations of (1) Contractor's use of the City's property or any activities or Work performed hereunder by the Contractor; (2) the Contractor's performance of the Work under the Agreement; or (3) the Contractor's breach of any provision of the Agreement. The duty of the Contractor to indemnify and save harmless includes the duties to defend as set forth in Civil Code Section 2778. The only exception to these provisions is that the Contractor's obligations under this section will not apply to the extent that the claims, demands, liability, suits, actions, costs or expenses are caused by Indemnitees' active negligence, willful misconduct, criminal acts, or for defects in design furnished by the Indemnitees, misconduct, criminal acts, or for defects in design furnished by the Indemnitees.

The Contractor waives any and all rights to any type of express or implied indemnity against the City, its officers, agents, employees, or volunteers.

The Contractor's responsibility for such defense and indemnity obligations shall survive the termination or completion of this Contract for the full period of time allowed by law. The defense and indemnity obligations of this Contract are undertaken in addition to, and shall not in any way be limited by, the insurance obligations contained in this Contract. The parties intend that the defense and indemnity obligations in this Contract shall be broadly construed.

Any person, firm or corporation that Contractor authorizes to Work on the City's property including Subcontractors, shall be deemed to be an agent of the Contractor for purposes herein, shall be subject to all the applicable terms herein, and shall be within the scope of the Contractor's indemnity obligation described herein.

FOR COUNCIL ONLY NOT FOR CONSTRUCTION

In addition to any remedy authorized by law, so much of the money due the Contractor under and by virtue of the Contract as shall be considered necessary by the Department may be retained by the City until disposition has been made of such suits or claims for damages.

The retention of money due the Contractor shall be subject to the following:

A. The City will give the Contractor thirty (30) Days' notice of its intention to retain funds from any partial payment which may become due to the Contractor prior to Acceptance of the Contract. Retention of funds from any payment made after Acceptance of the Contract may be made without such prior notice to the Contractor.

B. No retention of additional amounts out of partial payments will be made if the amount to be retained does not exceed the amount being withheld from partial payments pursuant to Section 7-1.07, "Progress Payments," of these General Conditions.

C. If the City has retained funds and it is subsequently determined that the City is not entitled to be indemnified and saved harmless by the Contractor in connection with matter for which such retention was made, the Department shall be liable for interest on the amount retained at the legal rate of interest for the period of such retention.

5-1.23 **INSURANCE COVERAGE.**

A. Evidence of Maintenance Required. The Contractor shall, at its expense, procure and at all times maintain in full force and effect at a minimum the insurance required by this section on all of its operations; and the Contractor shall not allow any Subcontractor to commence work until similar insurance required of the Subcontractor has been obtained and filed. An original Certificate of Insurance, and copies of all required endorsements, all in a form approved by the Risk Manager, evidencing all required coverage or policies shall be filed after the award of the bid and prior to approval of the Contract by the City Council. Contractor shall

FOR COUNCIL ONLY NOT FOR CONSTRUCTION

provide ten (10) days prior written notice to the City of any reduction of coverage limits or cancellation of the coverage or policies shall be given to the City of Roseville as Certificate holder.

B. Qualifying Insurers. With the exception of the State Compensation Insurance Fund, all required insurance policies shall be issued by companies acceptable to the City and licensed to do business in the State of California and who hold a current policy holders alphabetic and financial size category rating of not less than AVII according to the most recent issue of Best's Insurance Reports.

C. Insurance Required.

1. Commercial General Liability (CGL): Insurance Services Office Form CG 00 01 covering CGL on an "occurrence" basis, including products and completed operations with limits of no less than Two Million Dollars ($2,000,000) per occurrence for bodily injury, personal injury and property damage for projects under One Million Dollars ($1,000,000) and limits of no less than Five Million Dollars ($5,000,000) per occurrence for bodily injury, personal injury and property damage for projects over One Million Dollars ($1,000,000). If a general aggregate limit applies, either the aggregate limit shall apply separately to this project or the general aggregate limit shall be twice the required occurrence limit.

The Commercial General Liability insurance shall include the following, copies of which shall be provided:

a. Inclusion of the City of Roseville, and its officers, agents, employees, and volunteers, as additional insureds (except for workers' compensation) as respects services or operations under the Contract. The additional insured endorsement for the general liability policy shall be at least as broad as the ISO CG 2010 10 01 combined with ISO CGL

FOR COUNCIL ONLY NOT FOR CONSTRUCTION

Endorsement CG 2037 10 01. Any other endorsement must be approved in writing by the City. Endorsements must include coverage for on-going and completed operations, which coverage shall be maintained for four (4) years following completion of the Project. Endorsements shall cover the City of Roseville, its officers, agents, employees, and volunteers.

b. The insurance shall provide coverage for claims by one insured against another insured and the policies shall not contain any cross-suits exclusions, cross-liability exclusions, or insured versus insured exclusions. The policies shall not contain any classification exclusions purporting to deny coverage for any work to be performed by Contractor or any of its Subcontractors.

c. Stipulation that the insurance is primary and noncontributory, as evidenced by a separate endorsement (CG 20 01 04 13 or an equivalent) or section of the policy, and that neither the City nor its insurers will be called upon to contribute to a loss.

d. Such insurance shall specifically cover the contractual liability of the Contractor.

e. Any available insurance proceeds in excess of the specified minimum insurance coverage requirements and limits shall be available to the additional insureds. Furthermore, the requirements for coverage and limits shall be: (1) the minimum coverage and limits specified in this Agreement; or (2) the full coverage and maximum limits of any insurance proceeds available to the named insureds, whichever is greater.

f. Waiver of subrogation endorsement.

g. The Contractor shall furnish a certificate for the period covered.

2. Automobile Liability: Insurance Services Office Form Number CA 0001 covering Code 1 (any auto), or if Contractor has no owned autos, Code 8 (hired) and Code 9

FOR COUNCIL ONLY NOT FOR CONSTRUCTION

(non-owned), with limits of no less than One Million Dollars ($1,000,000) per accident for bodily injury and property damage.

3. Workers' Compensation: In accordance with the provisions of the California Labor Code, Contractor is required to be insured against liability for Workers' Compensation or to undertake self-insurance. Statutory Workers' Compensation and Employers' Liability of at least One Million Dollars ($1,000,000) shall cover all Contractors staff while performing any work incidental to the performance or this Agreement.

4. Professional Liability: Professional Liability (Errors and Omission) Insurance appropriate to Contractor's profession, with a limit of liability not less than One Million Dollars ($1,000,000) per occurrence or claim and Two Million Dollars ($2,000,000) aggregate to cover all design and engineering services rendered by Contractor pursuant to the Agreement. Coverage must commence from the first day that Contractor or any of its Subcontractors provided any design or engineering services in connection with the Project.

5. Builder's Risk/Course of Construction Insurance (If Required by Risk Management): The Contractor shall be responsible for all loss, damage or destruction whatsoever to the work called for by this Contract until the approval of a Notice of Completion or acceptance of the Work if no Notice of Completion is to be recorded.

The Contractor shall secure "All Risk" type of builder's Risk Insurance of the type covering one hundred percent (100%) of the value of the work performed under this Contract (the value is presumed to be the Contract amount unless otherwise stated in Supplemental Conditions) and all materials, equipment, or other items to be incorporated therein while the same are located at the construction site, a bonded warehouse, or its place of manufacture. At any time, the policy shall cover the value of the work completed. The policy shall cover hazards

FOR COUNCIL ONLY NOT FOR CONSTRUCTION

including the losses due to fire, explosion, hail, rain, lightning, flood (separate insurance as needed), vandalism, malicious mischief, wind, collapse, aircraft, and smoke.

The policies providing such insurance shall name the City as a loss payee as its respective interests may appear, and certified copies of such policies shall be filed with the City. The maximum deductible allowable under the Builder's All Risk policy shall be five percent (5%) of the Contract amount.

Builder's Risk Insurance is not required for coverage of losses in excess of five percent (5%) of the Contract amount for damages resulting from earthquake in excess of a magnitude of 3.5 on the Richter scale, or tidal waves. Coverage in the amount of five percent (5%) of the Contract amount for such losses is required.

6. Pollution Coverage: Contractor shall procure pollution liability coverage or other insurance covering claims for bodily injury or property damage arising out of the abatement, removal, storage, transportation, or other exposure to hazardous materials or pollutants, in limits not less than Two Million Dollars ($2,000,000). Contractor shall add the City and all parties required to be indemnified by Contractor as additional insured on all pollution liability policies.

7. Higher Coverage Limits: If Contractor maintains higher coverage limits than the amounts shown above, then the City requires and shall be entitled to coverage for the higher coverage limits maintained by Contractor. Any available insurance proceeds in excess of the specified minimum limits of insurance and coverage shall be available to the City.

8. Claims Made Coverage: Liability insurance coverage may not be written on a “claims made” or modified occurrence basis. The Certificate of Insurance must clearly provide that the coverage is on an “occurrence” basis.

FOR COUNCIL ONLY NOT FOR CONSTRUCTION

5-1.24 **OTHER INSURANCE PROVISIONS.**

A. The requirements of the Standard Specifications as to types and limits of insurance coverage to be maintained by the Contractor, and any approval of insurance by the City, are not intended to, and shall not in any manner limit or qualify the liabilities and obligations otherwise assumed by the Contractor pursuant to the Contract, including, but not limited to, the provisions concerning indemnification, nor preclude the City from taking any other action available to it under any other provision of the Contract or law.

B. The City acknowledges that some insurance requirements contained in these Standard Specifications may be fulfilled by self-insurance on the part of the Contractor. However, this shall not in any way limit liabilities assumed by Contractor under the Contract. Any self-insurance must be approved in writing by the City, in its sole discretion and shall not reduce the limits of liability. Any deductibles or self-insured retentions ("SIR") must be declared on the certificate of insurance and approved by City in writing. Policies containing any SIR provision shall provide or be endorsed to provide that the SIR may be satisfied by either the named insured or City. City reserves the right to obtain a full certified copy of any insurance policy and endorsements. The failure to exercise this right shall not constitute a waiver of such right.

C. The Contractor agrees to include in its contracts with all subcontractors the same requirements and provisions of this Contract, including the indemnity and insurance requirements, to the extent they apply to the scope of the subcontractor's work. Furthermore, the Contractor shall require its subcontractors to agree to be bound to the Contractor and the City in the same manner and to the same extent as the Contractor is bound to the City under this Contract. Additionally, the Contractor shall obligate its subcontractors to comply with these

FOR COUNCIL ONLY NOT FOR CONSTRUCTION

same provisions with respect to any tertiary subcontractor, regardless of tier. A copy of the City's indemnity and insurance provisions will be furnished to the subcontractor or tertiary subcontractor upon request. Alternatively, the Contractor may insure subcontractor(s) under its own policy.

D. The City, its officers, agents, employees, and volunteers are to be covered as insureds with respect to liability arising out of automobiles owned, leased, hired or borrowed by or on behalf of the Contractor; and with respect to liability arising out of work or operations performed by or on behalf of the Contractor including materials, parts or equipment furnished in connection with such work or operations. Coverage shall not extend to any indemnity coverage for the active negligence of the additional insured in any case where an agreement to indemnify the additional insured would be invalid under California Insurance Code Section 11580.04.

E. The limits of insurance required in this Contract may be satisfied by a combination of primary and excess insurance. Any excess insurance shall contain or be endorsed to contain a provision that such coverage shall also apply on a primary and noncontributory basis for the benefit of the City (if agreed to in a written contract) before the City's own insurance shall be called upon to protect it as a named insured.

F. The insurance procured by Contractor shall be subject to the approval of the City, but any acceptance of insurance certificates by the City shall in no way limit or relieve Contractor of its duties and responsibilities under the Agreement.

G. Contractor shall be responsible for all premiums, deductibles, and self-insured retention applicable to the insurance it is required to procure under the Contract. All deductibles or self-insured retentions over five hundred thousand dollars ($500,000) must be approved by the City, in writing. Contractor shall be responsible for all deductibles, self-insured

FOR COUNCIL ONLY NOT FOR CONSTRUCTION

retention payments, and/or increased premiums incurred if the City's policies of insurance are forced to cover damages or respond to claims for which Contractor or its Subcontractors were obligated to provide insurance under the Contract.

H. Failure of the City to enforce in a timely manner any of the requirements of these insurance provisions shall not act as a waiver to enforcement of any of these provisions at a later date.

I. Contractor's indemnity obligations shall not be limited by these insurance provisions and shall survive the expiration of the Contract and the insurance provisions of the Contract shall likewise not be limited by the indemnity provisions of the Contract.

J. THE CITY RESERVES THE RIGHT TO WITHHOLD ANY PROGRESS PAYMENTS TO THE CONTRACTOR IN THE EVENT OF NONCOMPLIANCE WITH ANY INSURANCE REQUIREMENTS.

5-1.25 **THIRD PARTY BENEFICIARY.** No provisions in the Contract Documents shall in any way inure to the benefit any third party (including the public at large or any member thereof) so as to constitute such person a third party beneficiary of the Contract, or of any term or condition or other provision of the Contract or otherwise give rise to any cause of action in any person not a party to the Agreement, except as expressly provided elsewhere in the Contract Documents.

5-1.26 **COORDINATION AND ACCESS.** The Contractor acknowledges that the City may award, or has already awarded, other construction contracts for additional work or may perform additional work with its own forces and that such work may affect the Work under this Agreement. Additionally, the Contractor acknowledges that the State and other public and private agencies may be granted a right-of-entry by the City for the purpose of constructing

FOR COUNCIL ONLY NOT FOR CONSTRUCTION

facilities within and adjacent to the Work Site. It is the obligation of the Contractor to coordinate its Work with the work of others working within or adjacent to the City's property.

During performance of its Work, the Contractor shall not have exclusive access to or use of the work areas. The City may also require that certain facilities and areas be used concurrently by the Contractor and by other contractors working in the area. When two (2) or more contractors are employed on related or adjacent City work, each shall conduct its operations in such a manner as not to cause any unnecessary delay or hindrance to the other. Each contractor shall be responsible to the other for all damage to any work, to persons or property caused to the other by its operations, and for loss caused the other due to any unnecessary delays or failure to finish the work within the time specified for completion.

If any party of the Contractor's Work depends on the work of any other contractor and/or the City for proper execution and/or results, the Contractor shall promptly notify the City of any discrepancies and/or defects in said other work that would render its work unsuitable for proper execution and/or results prior to proceeding with the Contractor's own Work. If it becomes necessary, the City will resolve coordination and access problems.

The Contractor and its representative in charge of the Work shall familiarize themselves with the City's property and Work Site, and adjacent surroundings in the vicinity of said Wok, and any private or public operations on adjoining properties.

5-1.27 **OCCUPANCY BY THE DEPARTMENT PRIOR TO ACCEPTANCE.** The City may at any time notify the Contractor in writing that it intends to take Beneficial Occupancy of any portion of the Work even though the Work may not be substantially complete. Unless the reason for the City's taking Beneficial Occupancy is that the Contractor has not completed the Work (or portions thereof) in accordance with the Contract

FOR COUNCIL ONLY NOT FOR CONSTRUCTION

Time, the City's Beneficial Occupancy shall relieve the Contractor from its responsibility for maintenance, loss or damage to that portion of the Work for which the City has taken Beneficial Occupancy other than that resulting from the Contractor's act or omission, negligence, willful misconduct or breach of warranty.

Should the Work (or portion thereof) not be completed in accordance with the Construction Schedule within the Contract Time (as adjusted under the terms of the Contract Documents), the City shall have the right, but not the obligation, to take Beneficial Occupancy of the Work. In such event, the Contractor shall not be entitled to any additional compensation on account of said occupancy by the City, nor shall the Contractor be relieved of any of its responsibilities under the Contract Documents, including, without limitation, Contractor's obligation to complete the Work in accordance with the Construction Schedule.

Beneficial Occupancy shall not be deemed an Acceptance by the City either of the Work or of any portion thereof, nor will it relieve the Contractor of full responsibility for correcting defective Work or materials found at any time before the formal written Acceptance of the entire Contract by the Director or during the full warranty period after such Acceptance, as provided in Section 7-1.12, "Warranty," of these General Conditions.

The City's Beneficial Occupancy shall not relieve the Contractor of its responsibility to maintain all insurance and bonds required under the Contract Documents until the entire project is accepted by the City.

FOR COUNCIL ONLY NOT FOR CONSTRUCTION

5-1.28 **RIGHT TO OPERATE UNSATISFACTORY FACILITIES AND EQUIPMENT.** If, after Installation, the operation or use of the facilities or equipment to be furnished under this Contract proves to be unsatisfactory to the Director, the City shall have the right to operate and use such facilities or equipment until they can, without damage to the City,

be taken out of service for correction or replacement. Such period of use of the defective facilities or equipment, pending correction or replacement, shall in no way decrease the warranty period required for the acceptable corrected or replaced facilities or equipment.

5-1.29 **CONTRACTOR'S RESPONSIBILITY FOR THE WORK.** Except as otherwise provided herein, the Contractor shall have the charge and care of the Work and shall bear the risk of injury or damage to any part of the Work by the action of the elements or from any other cause whether arising from the execution or from the nonexecution of the Work until the Acceptance of the Contract by the Director. The Contractor shall rebuild, repair, restore, and make good all injuries or damages to any portion of the Work occasioned by any cause before its completion and Acceptance, and shall bear the expense thereof. In case of suspension of Work from any cause whatever, the Contractor shall be responsible for the Work and it shall also be responsible for all materials, and shall properly store them if necessary, and shall provide suitable drainage and erect temporary structures where necessary.

The Contractor will be relieved of responsibility for any injury or damage to the Work caused by the following:

A. An earthquake in excess of a magnitude of 3.5 on the Richter Scale or a tidal wave, when the effect of such has been proclaimed a disaster or state of emergency by the Governor of the State of California or by the President of the United States, or was of such magnitude at the site of the Work as to have been sufficient to have caused a proclamation of disaster or state of emergency, had it occurred in a populated area.

B. Occupancy and use by the Department or the public prior to the completion of the entire project.

C. Acts of the Federal Government or the public enemy.

FOR COUNCIL ONLY NOT FOR CONSTRUCTION

5-1.30 **RESPONSIBILITY FOR UTILITIES.** The Contractor shall be responsible at its own cost for any and all Work, expense or special precautions caused or required by the existence or proximity of utilities encountered in performing the Work, including without limitation, repair of any or all damage and all hand or exploratory excavation required. The Contractor is cautioned that such utilities may include communication cables or electrical cables which may be high voltage, and when working or excavating in the vicinity of such cables, or the ducts enclosing such cables, the Contractor shall undertake at its own cost any special precautions required. Suitable warning signs, barricades, and safety devices shall be erected as necessary or required.

However, if during the course of the Work the Contractor encounters utility Installations which are not shown or indicated in the Contract Documents or which are found in a location substantially different from that shown, and such utilities are not reasonably apparent from visual examination, then the Contractor shall promptly notify the Director in writing. Where necessary for the Work of the Contract, the Director shall issue a written order to the Contractor to make such adjustments, rearrangement, repair, removal, alteration, or special handling of such utility, including repair of the damaged utility. The Contractor shall perform the Work described in such written order, and compensation therefor will be made in accordance with Section 3 of these General Conditions relating to changes in the Work. Except for the items of cost specified in said Section 3, the Contractor shall receive no compensation for any other cost, damage, delay, interference, or hindrance to him or her due to the presence of such utility. If the Contractor fails to give the notice specified above and thereafter acts without instructions for the Director, then the Contractor shall be liable for any or subsequent to discovery thereof, and the Contractor shall repair and make good such damage at its own cost.

FOR COUNCIL ONLY NOT FOR CONSTRUCTION

The precise location of underground facilities can only be determined by careful probing or hand digging in compliance with Article 6 of the Cal/OSHA Construction Safety Orders which states in part:

> "Prior to opening an excavation, effort shall be made to determine whether underground installations, i.e., sewer, water, fuel, electric lines, etc., will be encountered, and if so, where such underground installations are located. When the excavation approaches the approximate location of such an installation, the exact location shall be determined by careful probing or hand digging, and, when it is uncovered, adequate protection shall be provided for the existing installation."

The location of known existing utilities and pipelines are shown on the Contract Drawings in their approximate locations. Some of the locations include multiple conduits. The Contractor shall exercise care in avoiding damage to those facilities which are to remain in service subsequent to the construction of the particular new facility involved and the Contractor will be held responsible for any repairs if damaged. The Contractor shall also exercise care in maintaining those pipes and facilities required for continuing operation of the existing facilities until such time as they can be abandoned. There is no guarantee that all utilities or obstructions are shown on the Contract Drawings or that the locations indicated are accurate.

The Contractor shall exercise extreme caution in working in the area adjacent to the existing pipelines and utility services. It is essential that all the existing facilities be maintained in service. Construction of the connections between the existing facilities and the new facilities shall be at times and during periods acceptable to the City. The Contractor shall advise the Director in writing of its proposed Construction Schedule for these connections at least forty-eight (48) hours in advance.

FOR COUNCIL ONLY NOT FOR CONSTRUCTION

The Contractor shall uncover all piping and conduits, to a point one foot (1') below the pipe, where crossings, interferences, or connections are shown on the Contract Drawings, prior to trenching or excavating for any pipe or structures, to determine actual elevations. New pipelines shall be laid to such grade as to clear all existing facilities which are to remain in service. If the Contractor does not expose all required utilities, it shall not be entitled to additional compensation for Work necessary to avoid interferences nor for repair to damaged utilities. Excavations around underground electrical ducts and conduits shall be performed using extreme caution to prevent injury or damage to workers and to the electrical ducts or conduits.

5-1.31 **PROPERTY RIGHTS IN MATERIALS.** Nothing in the Contract shall be construed as vesting in the Contractor any right of property in the materials used after they have been attached or affixed to the Work or soil or after partial payment has been made as provided in Section 7-1.07, "Progress Payments," of these General Conditions for material delivered on the ground or stored subject to or under the control of the City and unused. All such material shall become the property of the City upon being so attached or affixed or upon payment for materials delivered on the ground or stored subject to or under the control of the City and unused, as provided in said Section 7-1.07.

5-1.32 **COURT ORDERED DELAY.** If, pursuant to court order, the Department temporarily suspends performance of all or any portion of the Work, an extension of time determined pursuant to the provisions in Section 6-1.08, "Liquidated Damages," of these General Conditions will be granted.

5-1.33 **NO PERSONAL LIABILITY.** Neither the Director, nor any other officer or authorized employee of the City, shall be personally responsible for any liability arising under or by virtue of the Contract.

FOR COUNCIL ONLY NOT FOR CONSTRUCTION

5-1.34 **RIGHTS IN LAND AND IMPROVEMENTS.** The Contractor shall make no arrangements with any person or entity to permit occupancy or use of any land, structure or building within the limits of the Work, for any purpose whatsoever, either with or without compensation, in conflict with any agreement between the City and any third party owner, former owner, or tenant of such land, structure or buildings. The Contractor shall not occupy City-owned property outside the limit of the Work shown on the Contract Drawings unless it obtains prior approval.

5-1.35 **ANTITRUST CLAIMS.** The Contractor's attention is directed to the following provision of Public Contract Code Section 7103.5(b), which is applicable to the Contractor and its Subcontractors:

> " In entering into a public works contract or a subcontract to supply goods, services, or materials pursuant to a public works contract, the contractor or subcontractor offers and agrees to assign to the awarding body all rights, title, and interest in and to all causes of action it may have under Section 4 of the Clayton Act (15 U.S.C. Sec. 15) or under the Cartwright Act (Chapter 2 [commencing with Section 16700] of Part 2 of Division 7 of the Business and Professions Code), arising from purchases of goods, services, or materials pursuant to the public works contract or the subcontract. This assignment shall be made and become effective at the time the awarding body tenders final payment to the contractor, without further acknowledgement by the parties."

5-1.36 **RIGHTS TO DRAWINGS, TECHNICAL DATA PATENTS.** Shop

FOR COUNCIL ONLY NOT FOR CONSTRUCTION

Drawings and Working Drawings submitted to the City by the Contractor, Subcontractor or any lower tier Subcontractor pursuant to the Agreement, are the property of the City and the City may use, and disclose in any manner and for any purpose, Shop Drawings and Working Drawings delivered under the Contract.

Technical Data including manuals or instructional materials, computer or microprocessor software which are delivered or submitted to the City by the Contractor, Subcontractor, or any lower tier Subcontract pursuant to the Contract are the property of the City, and the City may use or disclose same in any manner and for any purpose.

The Contractor shall assume all costs arising from the use of patented materials, equipment, devices, or processes used on or incorporated in the Work, and shall defend, indemnify and save and hold harmless the City, and its duly authorized representatives, from all suits at law, or in equity, and actions of every nature for, or on account of the use of any patented materials, equipment, devices or processes. In case some materials, equipment, devices or processes are held to constitute an infringement and their use enjoined, the Contractor, at its expense, shall:

1. Secure for the City the right to continue using said materials, equipment, devices or processes by suspension of the injunction or by procuring a license or licenses; or
2. Replace such materials, equipment, devices, processes; or
3. Modify them so that they become non-infringing or remove the enjoined materials, equipment, devices or processes and refund the sums paid therefor without prejudice to any other rights of the City.

5-1.37 **PAYMENT OF TAXES.** Contractor shall pay all taxes and duties applicable to and assessable against any Work, equipment, materials, services, processes, and

FOR COUNCIL ONLY NOT FOR CONSTRUCTION

operations incidental to or involved in the Agreement, including but not limited to, retail sales and use, transportation, export, import, business, and special taxes. The Contractor is responsible for ascertaining and acquainting itself with such taxes and making all necessary arrangements to pay them. The Contractor will maintain records that are auditable records, and these records shall be subject to the City's review to verify that Contractor's tax payments are current at all times.

The Contract Price paid for the Work shall include full compensation for all taxes which the Contractor is required to pay, whether imposed by Federal, State or local government, including, without being limited to, Federal excise tax. No tax exemption certificate nor any document designed to exempt the Contractor from payment of any tax will be furnished to the Contractor by the Department, as to any tax on labor, services, materials, transportation, or any other items furnished pursuant to the Contract.

The Contractor shall withhold and pay any and all sales and use taxes, withholding taxes, whether Federal, State, or local, Social Security taxes, State Unemployment Insurance charges and all other taxes which are now or hereafter may be required to be paid or withheld under any laws.

5-1.38 **GRATUITIES AND CONFLICT OF INTEREST.** The Contractor shall not offer or provide gratuities in the form of gifts, entertainment, loans, meals, rewards, and/or services to representatives of the City, including but not limited to, officers, employees, agents, Engineering Service Consultants, Consulting Engineers and Architects, Inspectors and/or Testing Agencies retained by the City. If it is found that the Contractor has violated this provision, the Contract may be subject to termination for default as defined elsewhere in these General Conditions.

FOR COUNCIL ONLY NOT FOR CONSTRUCTION

During the term of the Contract and until the final payment has been made to the Contractor, the Contractor shall not employ or compensate in any manner whatsoever, the City's officers, employees and authorized representatives, agents, and any Engineering Service Consultants, Consulting Engineers and Architects, Inspectors, and/or Testing Agencies retained by the City. Any exception to the employment or compensation to any of the above named parties must be made in writing by the City. If the Contractor offers or provides employment or compensation to those named above during the term of the Contract, the Contract may be subject to termination for default.

5-1.39 **COOPERATION.** Should construction be under way by City forces or other forces or by other Contractors within or adjacent to the limits of the Work or should Work of any other nature be under way by such forces within or adjacent to said limits, the Contractor shall cooperate with all such forces to the end that any delay, interference or hindrance to their Work will be avoided. The right is reserved to perform other or additional Work at or near the site at any time, by the use of such forces.

5-1.40 **DIGGING TRENCHES OR OTHER EXCAVATIONS.** In the event any work involves digging trenches or other excavations that extend deeper than four feet (4') below the surface, City and Contractor shall comply with the following:

A. The Contractor shall promptly, and before the following conditions are disturbed, notify City in writing of any:

1. Material that the Contractor believes may be material that is hazardous waste, as defined in Section 25117 of the Health and Safety Code, that is required to be removed to a Class I, Class II, or Class III disposal site in accordance with provisions of existing law.

FOR COUNCIL ONLY NOT FOR CONSTRUCTION

2. Subsurface or latent physical conditions at the site differing from those made available to Contractor for inspection as provided in the project proposal.

3. Unknown physical conditions at the site of any unusual nature, different materially from those ordinarily encountered and generally recognized as inherent in Work of the character provided for in the Contract.

B. The City shall promptly investigate the conditions, and if it finds that the conditions do materially so differ, or do involve hazardous waste, and cause a decrease or increase in the Contractor's cost of, or the time required for, performance of any part of the Work shall issue a Change Order under the procedures described in the Contract.

C. In the event that a dispute arises between the City and the Contractor whether the conditions materially differ, or involve hazardous waste, or cause a decrease or increase in the Contractor's cost of, or time required for, performance of any part of the Work, the Contractor shall not be excused from any scheduled completion date provided for by the Contract, but shall proceed with all work to be performed under the Contract. The Contractor shall retain any and all rights provided either by contract or by law which pertain to the resolution of disputes and protests between the contracting parties. However, no claim of the Contractor under this clause shall be allowed unless the Contractor has given the notice required by this Section. No claim by the Contractor for an equitable adjustment hereunder shall be allowed if asserted after final payment under this Contract.

FOR COUNCIL ONLY NOT FOR CONSTRUCTION

5-1.41 **CONTRACTOR REGISTRATION.** No contractor or subcontractor may work on a public works project unless registered with the Department of Industrial Relations pursuant to Labor Code section 1725.5. During the performance of this Contract, the Contractor and its subcontractors shall have a continuing legal obligation to maintain current

registration with the Department of Industrial Relations. The Contractor is hereby notified that this project is subject to compliance monitoring and enforcement by the Department of Industrial Relations.

5-1.42 **CITY OF ROSEVILLE ENCROACHMENT PERMITS AND RIGHTS-OF-WAY.** The Contractor need not obtain a separate encroachment permit from the City prior to construction within street rights-of-way or other City rights-of-way. Execution of the Contract by the City shall be deemed an encroachment permit for work required by the Contract within rights-of-way. All work shall conform to the rules and regulations of encroachment permits and shall be subject to the inspection and approval of the Director and City Engineer.

To the extent indicated in the Contract Drawings, the City will provide the rights-of-way over private lands or the site to enable the Contractor to perform its work. The Contractor shall be solely responsible for securing any additional rights-of-way desired by the Contractor. The City will not be a party to nor assume any liability for any separate agreements reached between the Contractor and any third parties with respect to these additional rights-of-way. The Contractor shall procure evidence that agreements are in place with said third parties before the Contractor uses those areas covered by the agreements. Any damage to such private lands caused by the Contractor's operations shall be the sole responsibility of the Contractor.

5-1.43 **CALIFORNIA AIR RESOURCES BOARD REGULATIONS.** The Contractor shall comply with any applicable regulations of the California Air Resources Board ("CARB") set forth below.

A. In-Use Off-Road Diesel-Fueled Fleets. If the Contractor will use vehicles subject to Cal. Code Regs., tit. 13, §§ 2449 et seq. for the project, it shall submit a valid

FOR COUNCIL ONLY NOT FOR CONSTRUCTION

Certificate of Reported Compliance to the City as provided in § 2449(n).

B. Advanced Clean Fleets. Pursuant to Cal. Code Regs., tit. 13, § 2013(i)(1), the Contractor shall submit to the City either a signed statement stating that it is not subject to the High Priority and Federal Fleets regulation of title 13, CCR section 2015 through 2015.6, or a document evidencing that it is listed on the CARB Advanced Clean Fleets webpage as a compliant fleet.

FOR COUNCIL ONLY NOT FOR CONSTRUCTION

SECTION 6

PROSECUTION AND PROGRESS

6-1.01 **SUBLETTING AND SUBCONTRACTING.** The Contractor shall be responsible for all Work performed under the Contract. The Contractor shall give its personal attention to the fulfillment of the Contract and shall keep the Work under its control. Nothing in the Contract Documents shall create any contractual relationship between the City and any Subcontractor. The Contractor is fully responsible to the City for the acts and omissions of its Subcontractors of any tier. When any Subcontractor fails to prosecute a portion of the Work in a manner satisfactory to the Director, that Subcontractor shall not again be employed on the Work. Although the sections of the Contract may be arranged according to various trades, or general grouping of the Work, the Contractor is not obligated to sublet the Work in such manner. The Director will not arbitrate disputes among Subcontractors or between Contractor and one or more Subcontractors concerning responsibility for performing any part of the Work.

The on-site production of materials produced by other than the Contractor's own forces shall be considered as subcontracted. The erection, establishment or reopening of on-site plants for production of materials and the operation thereof in the production of materials for use on the Work shall conform to the requirements relating to labor set forth in the Contract Documents.

The Contractor shall also be responsible for coordinating the Work performed by Subcontractors and Suppliers.

The Contractor shall not substitute any person as Subcontractor in place of a Subcontractor listed on its bid proposal without the written approval of the Director. Substitutions must be in accordance with the provisions of the "Subletting and Subcontracting

FOR COUNCIL ONLY NOT FOR CONSTRUCTION

Fair Practices Act" beginning with Public Contract Code Section 4100. Violations of this Act by the Contractor may subject it to penalties which may include cancellation of Contract, Assessment of ten percent (10%) of the Subcontractor's bid, and disciplinary action by the Contractors State License Board.

The Contractor shall pay any Subcontractors approved by the City for work that has been satisfactorily performed no later than seven (7) Days from the date of Contractor's receipt of progress payments by the City. Within seven (7) Days after receipt from the City of funds attributable to work performed by a Subcontractor, Contractor shall release any retainage payments withheld to the Subcontractor. In the event Contractor does not make progress payments or release retention to Subcontractors in accordance with the time period specified herein, Contractor may be subject to prompt payment penalties per statute.

6-1.02 **ASSIGNMENT.** The performance of this Contract may not be assigned, except upon the written consent of the City Council of the City of Roseville. Consent will not be given to any proposed assignment which would relieve the original Contractor or its surety of their responsibilities under the Contract nor will the City consent to any assignment of a part of the Work under the Contract.

The Contractor may assign moneys due or to become due to it under the Contract and such assignment will be recognized by the City, if given proper notice thereof, to the extent permitted by law, but any assignment of moneys shall be subject to all proper set-offs in favor of the City and to all deductions provided for in the Contract and particularly all money withheld, whether assigned or not, shall be subject to being used by the City for the completion of the Work in the event that the Contractor should be in default therein.

6-1.03 **BEGINNING OF WORK.** After the execution of the Contract by both

FOR COUNCIL ONLY NOT FOR CONSTRUCTION

parties, the City will issue the Notice to Proceed upon its determination that it is appropriate for the Contract Time to commence.

The Contractor shall begin Work within fifteen (15) Days after receiving the Notice to Proceed from the Director, subject to the requirements stated elsewhere in the Contract Documents regarding, among other things, the submittal of Baseline Schedule, and shall diligently prosecute the same to completion within the time limit provided in the Supplemental Conditions. Contractor shall also achieve any and all Contract milestones as described elsewhere in the Contract Documents.

The Contractor shall notify the Director, in writing, of its intent to begin Work at least seventy-two (72) hours before Work is begun. The notice shall be delivered to the Director and shall specify the date the Contractor intends to start. If the project has more than one (1) location of Work, a separate notice shall be given for each location.

The Contractor is not authorized to perform any Work until it has received a Notice to Proceed from the City. Should the Contractor begin Work in advance of receiving notice that the Contract has been approved as above provided, any Work performed by it in advance of the said date of approval shall be considered as having been done by the Contractor at its own risk and as a volunteer unless said Contract is so approved thereafter.

6-1.04 **PROGRESS SCHEDULE.**

A. Preliminary Progress Schedule. The Contractor shall submit to the Director, within twenty (20) Days after date of the Notice to Proceed, a Preliminary Progress Schedule covering the Contractor's activities over the first three (3) months of operation in detail and the remainder of the project in summary. The Preliminary Progress Schedule shall schedule the project within the Contract Time for completion of the Work, and shall be subject to

FOR COUNCIL ONLY NOT FOR CONSTRUCTION

favorable review by the Director.

B. CPM Schedule. The Contractor shall submit an acceptable Critical Path Method (CPM) Schedule to the Director within thirty (30) Days after the receipt of the Notice to Proceed. Subsequent revisions to said schedule shall be submitted as set forth hereinafter. The requirement for the CPM schedule is included to allow for adequate planning and execution of the Work, to determine the critical nature of delays, and to assist the Director in appraising the reasonableness of the proposed schedule and evaluating progress of the Work. The CPM schedule submitted under this Section shall utilize a CPM format, either the precedence or arrow diagramming method. The definitions of CPM terms and functions shall be as provided in the Associated General Contractors of America book *CPM in Construction, A Manual for General Contractors*, or a favorably reviewed alternative publication or reference. No progress payment will be made prior to submission and acceptance of the CPM Schedule.

1. The CPM schedule system shall consist of diagrams and accompanying mathematical analyses. The diagrams shall show elements of the project in detail and an entire project summary. Diagrams shall show the order and interdependence of activities and sequence in which the Work is to be accomplished as planned by the Contractor. The basic concept of a network analysis diagram shall be followed to show how the start of a given activity is dependent on the completion of preceding activities and its completion restricts the start of following activities. Detailed network activities shall include, in addition to construction activities, the submittal and favorable review of samples of material and Shop Drawings, the procurement of critical materials and equipment, fabrication of special material and equipment, and their Installation and testing. All activities of the City and the Director that affect progress and required Contract dates for completion of all or parts of the Work shall be shown. The

FOR COUNCIL ONLY NOT FOR CONSTRUCTION

selection and number of activities shall be subject to favorable review by the Director. Summary networks shall be time scaled. Durations shall be in Days and shall not exceed fifteen (15) Days, except for submittal and delivery items. Where the duration of continuous Work exceeds fifteen (15) Days, Work items in the Construction Schedule shall be subdivided by location, approximate stationing or other sub-element of the Work.

The graphic network diagram shall include for each activity, the description, activity number, the estimated duration in Days, and all activity relationship lines. The network diagram shall be drawn for the early start of activities. All significant Submittals shall be scheduled along with manual Submittals and training on all large or critical pieces of equipment. If the precedence technique is utilized, the schedule project shall include a calendar in Work Days, a network report sorted by early start and a logic table report sorted by preceding Work item. If the arrow technique is utilized, the schedule report shall include a calendar in Work Days, a network report sorted by early start, a network report sorted by I-J numbers, and a network sorted by slack time and I-J numbers.

2. The critical path shall be shown on all reports and on the graphic network diagram. The activities which constitute the critical path shall be identified.

3. The mathematical analysis of the network diagram shall include a tabulation of each activity. The following information shall be furnished as a minimum for each activity:

(a) preceding and following event numbers

(b) activity description and number

(c) estimated duration of activities

(d) earliest start date (by calendar date)

FOR COUNCIL ONLY NOT FOR CONSTRUCTION

(e) earliest finish date (by calendar date)

(f) actual start date (by calendar date)

(g) actual finish date (by calendar date)

(h) latest start date (by calendar date)

(i) latest finish date (by calendar date)

(j) slack or float

(k) percentage of activity completed

4. The program shall be capable of accepting revised completion dates as modified by approved time adjustments and recomputations of all tabulation dates and float accordingly.

5. Submission and review of the system shall be as follows:

(a) The complete network analysis system, consisting of the detailed network mathematical analysis and network diagrams, shall be submitted within thirty (30) Days after receipt of the Notice to Proceed.

(b) The Contractor shall participate in a review and evaluation of the proposed network diagrams and analysis by the Director. Any revisions necessary as a result of this review shall be resubmitted for review by the Director within ten (10) Days. When completed, the favorably reviewed schedule shall then be the schedule to be used by the Contractor for planning, organizing and directing the Work and for reporting progress. If the Contractor thereafter desires to make significant changes in its method of operating and scheduling, the Contractor shall notify the Director in writing stating the reasons for the change.

(c) The Contractor shall submit at monthly intervals a report of the actual construction progress. Each monthly report shall cover a period of approximately thirty

FOR COUNCIL ONLY NOT FOR CONSTRUCTION

(30) Days ending around the 20th of each month. The monthly reports shall be submitted within ten (10) Days of the end of the reporting period.

(1) If the project is proceeding on schedule, the monthly update report may consist of a marked-up copy of the graphical network diagram. This submittal shall clearly indicate the status of any minor shifts in sequence or schedule and the estimated completion date or percent complete of all activities currently in progress. The Contract completion date shall also be indicated. The Contractor shall submit a narrative report relating to status of construction, the schedule, and factors which may affect the remainder of the schedule. The report shall show the activities or portions of activities completed during the reporting period. The report shall state the percentage of the Work actually completed and scheduled as of the report date and the progress along the critical path in terms of Days ahead or behind the allowable dates.

(2) If, in the opinion of the Director, the project is behind schedule, the monthly report shall include a revised network diagram and/or mathematical analysis showing the Contractor's proposed revised schedule. An analysis of the effect that the delay has on progress along other paths shall also be included in the report. The Contractor shall also submit a narrative report with each updated analysis which shall include but not to be limited to a description of current and anticipated problem areas, delaying factors and their impact, and an explanation of corrective actions taken or proposed.

(3) Periodic report shall be submitted in sufficient copies to cover Contractor needs plus five (5) copies and an available electronic copy to be retained by the Director.

FOR COUNCIL ONLY NOT FOR CONSTRUCTION

6. To the extent that the favorably reviewed initial Construction Schedule, or revisions thereto, indicate anything not jointly agreed upon, it shall be deemed to be not favorably reviewed by the Director. Any omission of Work from the detailed schedule, otherwise required for Contract compliance, will not excuse the Contractor from completing such Work within any applicable completion date. The CPM schedule shall be generated by computer methods.

C. Schedule Review. Once each month, on a date mutually agreed upon, but no later than seven (7) business days after the monthly schedule progress report date, a Work Site meeting will be held to review the Construction Schedule and job progress. The Contractor shall also attend weekly meetings scheduled by the Director to review the progress of the Work in the preceding week and in the subsequent week, coordinate the Work with public agencies or other Contractors as required, and allow the Director to plan his or her activities for testing, inspection, etc.

D. Schedule Revisions. The conditions under which the Director will require revisions of the Construction Schedule include the following:

1. When delay in completion of any Work item or sequence of Work items results in an estimated extension of project completion by either twenty (20) business days or by ten percent (10%) of the remaining duration of time to complete the Contract, whichever is less.

2. When delays in Submittals or deliveries make replanning or rescheduling of the Work necessary.

3. When the schedule does not represent actual prosecution and progress of the Work.

FOR COUNCIL ONLY NOT FOR CONSTRUCTION

4. When any change to the sequence of activities, the completion date for major portions of the Work, or when changes occur which affect the critical path.

5. When Contract Amendments or a Change Order necessitates schedule revision, the Contractor shall submit a schedule analysis of all Change Order Work with its proposal.

E. Cash Flow Projection. A cash flow projection shall be submitted with the Construction Schedule. This cash flow projection shall be revised and resubmitted when revisions of the Construction Schedule will result in changes to the projected cash flow.

F. Schedules showing project completion dates earlier than specified in the Supplemental Conditions will be rejected unless justification can be provided for early completion.

6-1.05 **SCHEDULE OF VALUES.** Prior to preparation of the first estimate for a progress payment, the Contractor shall submit for favorable review by the Director a detailed Schedule of Values or cost breakdown of the Work under each bid item awarded. The breakdown will then become the basis for partial payment determination. Elements of Work shall be grouped by structure, pipeline, system, etc. Within each grouping, Work should be itemized by readily measurable quantities of Work complete in place. For example, concrete should be in units of cubic yards including form Work and reinforcing steel. Move-on costs, bond and insurance costs, and Overhead costs shall not be considered an item of cost for this purpose but shall be prorated over items of Work. In the event the Schedule of Values is not favorable reviewed by the Director, another Schedule of Values shall be submitted that is mutually acceptable to the Contractor and the Director.

6-1.06 **CITY'S RIGHT TO STOP WORK.** The Director shall have the

FOR COUNCIL ONLY NOT FOR CONSTRUCTION

authority to order the Contractor, in writing, to suspend the Work wholly or in part, for such period as the Director may deem necessary due to the failure on the part of the Contractor to correct Work that is not in accordance with the requirements of the Contract Documents or if Contractor persistently fails to carry out Work in accordance with the Contract Documents.

The Contractor shall immediately comply with the written order of the Director to suspend the Work wholly or in part. The suspended Work shall be resumed when conditions are favorable and methods are corrected, as ordered or approved in writing by the Director.

Any stoppage of work under this section shall be at the Contractor's sole expense, and the Contractor shall have no claim against the City based on the Contractor's failure to perform the Work in accordance with the Contract Documents.

In addition to the City's right to stop Work, the City may order the Contractor to submit to the City at no additional cost to the City, additional information concerning Contractor's planned Work if the Contractor fails to promptly correct Work that is not in accordance with the requirements of the Contract Documents or persistently fails to carry out Work in accordance with the Contract Documents. The additional information ordered by the City may include, but is not limited to, preparation of Submittals or Working Drawings not otherwise required to be submitted under the Contract Documents.

In the event the City discovers that the Contractor has created an unsafe condition the City may arrange for other work forces to remedy the condition. Such remedial work shall be at the sole discretion of the City. If this action is required, the City may unilaterally terminate Work under the Contract, and will pay only for the quantities of Work actually performed, less the cost of the City's remedial Work. In the event that Work is not halted, the Contractor must take immediate steps to correct the situation. There will be no extra payment for Work required

FOR COUNCIL ONLY NOT FOR CONSTRUCTION

to correct unsafe conditions.

The right of the City to suspend the Work shall not give rise to a duty on the part of the City to exercise this right for the benefit of the Contractor or any other person or entity. This right shall be in addition to and not in restriction or derogation of the City's other rights under the Contract Documents.

In the event of a suspension of Work under any of the conditions set forth in this Section 6-1.06, such suspension of Work shall not relieve the Contractor of its legal responsibilities as set forth in these General Conditions.

6-1.07 **TIME OF COMPLETION.** The Contractor shall complete the entire Work, including Installation, repairs, startup, troubleshooting, painting, and touchup, training, submittal or record drawings, and manuals, cleanup, demobilization, and all other Work within the number of Days set forth in the Supplemental Conditions. The time for completion includes an allowance for working time lost due to normal inclement weather.

Extensions of time may be allowed for unusual inclement weather under the provisions hereinafter described. Unusual inclement weather is weather which adversely affects "controlling" operations or the critical path of construction and which meets one of the following criteria:

A. For the particular calendar month in question, the number of individual Days with rainfall exceeding 0.10 inches exceeds the average number of such Days for that month over the immediately preceding five (5) years of record by at least three (3) Days.

B. For the particular calendar month in question, the total cumulative rainfall for that month exceeds the average cumulative rainfall for that month over the immediately preceding five (5) years of record by at least two inches (2").

FOR COUNCIL ONLY NOT FOR CONSTRUCTION

Rainfall shall be measured at a publicly operated, maintained, and reported station in reasonable proximity to the construction site. A claim for delay shall indicate the period of rainfall which is claimed as "unusual," the specific dates during which the unusual rainfall and subsequent wet soil conditions prevented Work, and the specific critical path tasks adversely affected by such unusual weather. A claim for delay due to unusual inclement weather shall be filed within ten (10) Days of the apparent end of the unusual inclement rainfall period, whether or not the monthly totals are available at that time. The burden of proof that weather meets the criteria for unusual weather shall be solely the responsibility of the Contractor.

It is the responsibility of the Contractor to order materials required for the Work properly and promptly on a Notice to Proceed. If evidence presented demonstrates that, in spite of the Contractor's efforts, government-established priorities controls delay material deliveries, suitable extension of time will be made.

If performance of extra Work ordered by the City or failure of the City to provide the necessary site for Installation affects construction tasks which are "controlling" or which are on the "critical path" of the Construction Schedule, suitable extensions of time will be made.

The Contractor shall not be entitled to a time extension for delays in activities on non-critical paths of the favorably reviewed schedule unless the duration of the excusable delay exceeds the total float of the activities being delayed. If the duration of an excusable delay does exceed the total float of the activities affected by the delay, the Contractor shall be entitled to an extension equal to the difference.

C. Determination that a day is a non-working day by reason of inclement weather or conditions resulting immediately therefrom, shall be made by the Director.

6-1.08 **LIQUIDATED DAMAGES.** It is agreed by the parties to the Contract

FOR COUNCIL ONLY NOT FOR CONSTRUCTION

that in case all the Work called for under the Contract in all parts and requirements is not completed within the number of Days as set forth in the Supplemental Conditions, damage will be sustained by the City and that it is and will be impracticable and extremely difficult to ascertain and determine the actual damage which the City will sustain in the event of and by reason of such delay; and it is therefore agreed that the Contractor will pay to the City, the monetary amount indicated in the Supplemental Conditions in dollars (U.S.) per day for each and every calendar day of delay in completing the Work in excess of the number of Days prescribed and the number of additional calendar days, if any, authorized by Contract Change Order; and the Contractor agrees to pay said Liquidated Damages herein provided for, and further agrees that the City may deduct the amount thereof from any moneys due or that may become due the Contractor under the Contract.

It is further agreed that in case the Work is not finished and completed in all parts and requirements within the number of Days specified, the City shall have the right to increase the number of Days or not, as it may deem best to serve the interest of the City, and if it decides to increase the said number of Days, it shall further have the right to charge to the Contractor, its heirs, assigns or sureties and to deduct from the final payment for the Work all of any part, as it may deem proper, of the actual cost of engineering, inspection, superintendence, and other Overhead expenses which are directly chargeable to the Contract, and which accrue during the period of such extension, except that cost of preparation of final statement shall not be included in such charges.

6-1.09 **DELAYS AND EXTENSIONS TO THE WORK.** The Contractor must complete all Work within the time specified in the Agreement. The Contractor will be granted an extension of time and will not be assessed with liquidated damages or the cost of engineering

FOR COUNCIL ONLY NOT FOR CONSTRUCTION

and inspection for any delay in substantially completing the Work (or parts thereof) beyond the time set forth in the Agreement, provided that such delay was caused by unforeseeable causes beyond the control and without the fault or negligence of the Contractor. Examples of such causes include acts of public enemy, fire, floods, abnormal weather (as described below), earthquakes, epidemics, quarantine restrictions, strikes, labor disputes and freight embargoes, fire, changes made pursuant to the provisions of "Changes in the Work" under Section 3 of these General Conditions or acts or neglect of the City not contemplated by the Contract Documents. In all cases, any extension of time is conditioned on the following:

1. That the cause is not due to the fault or negligence of the Contractor, and the Contractor has taken reasonable precautions to prevent and minimize the effects thereof; and

2. That the Contractor notifies the Director in writing within three (3) Days from the beginning of such delay specifying the nature of the delay and the measures that have been or will be taken to prevent or minimize the delay. Failure to submit written notice within this time period shall constitute an absolute waiver of any claim for a time extension.

No extension of time will be granted for a delay caused by a shortage of materials, unless the Contractor furnishes to the City documentary proof that it has diligently made every effort to obtain such materials from all known sources within reasonable reach of the work and further proof, as acceptable to the Director, that the inability to obtain such materials when originally planned did in fact cause a delay in Final Completion of the entire Work which could not be compensated for by revising the sequence of the Contractor's operations. Only the physical shortage of material will be considered as a cause for extension of time, and no consideration

FOR COUNCIL ONLY NOT FOR CONSTRUCTION

will be given to any claim that material could not be obtained at a reasonable, practical or economical cost or price, unless it is shown to the satisfaction of the City that such material could have been obtained only at exorbitant prices entirely out of line with current rates, taking into account the quantities involved and the usual practices in obtaining such quantities.

No extension of time will be granted for a delay caused by Contractor's staff turnovers, understaffing or insufficient quantity of qualified staff able to perform the necessary work.

The term "shortage of materials," as used in this section, shall apply only to materials, articles, parts or equipment which are standard items and shall not apply to materials, parts, articles or equipment which are processed, made, constructed, fabricated or manufactured to meet the specific requirements of the Contract Documents.

No extensions of time will be granted for delays that have no measureable impact on the completion of the Work (or parts thereof) under the Contract Documents. When extensions of time are granted, they will be limited to the period equivalent to the actual number of Days lost on the critical path or controlling operations of the Construction Schedule, taking into account the extent to which that delay could be decreased by reasonable mitigation measures by the Contractor. All requests for extensions of time must be supported with a critical path analysis showing the critical path and impacts to it. Contractor's failure to submit this analysis will be sufficient cause for denial of any request for a time extension.

Within a reasonable period of time after the Contractor submits the notice and information required by this section, the City will determine whether an extension of time is justified and, if so, the number of days for the extension.

Abnormal weather may be a valid basis for a time extension under the Agreement. "Abnormal Weather" occurs when the number of days of rain above 0.5 inches in a 24 hour

FOR COUNCIL ONLY NOT FOR CONSTRUCTION

period exceeds the average for such rainfall in a particular month as determined by the National Weather Service. The Contractor will only be entitled to, at most, a time extension for the number of days of rain exceeding the average for that month in the locale where the Work is to be performed. If delays are caused by the Contractor or those for whom the Contractor is responsible, the Contractor will only be entitled to, at most, a time extension for the number of rain days exceeding the average for the month when the Work should have been performed.

In addition, before a time extension may be granted for abnormal weather, the Contractor must establish that the rain either significantly impacted at least sixty percent (60%) of the planned work of the controlling operations for a particular day or prohibited at least five (5) hours of work on the controlling operations planned for that day. Contractor shall employ reasonably methods to mitigate the impact of abnormal weather (i.e., dewatering, protection of site, etc.) The occurrence of rain during non-work hours or having minimal impact to work on the controlling operation shall not constitute a day of abnormal weather.

In the event that the project experiences favorable weather for a particular month (e.g., the number of actual rain days in a month less than that indicated above for allowable rain days per months), the additional float resulting from such favorable weather shall accrue to the project.

Any Contractor claim for damages or additional compensation based on delay shall be limited to only those circumstances where the Contractor has fulfilled each of the following three (3) requirements:

1. Contractor has established its entitlement to a time extension pursuant to the provisions described above regarding delay and extensions to the Work.
2. The delay was caused solely by the City's issuance of changes made pursuant to the

FOR COUNCIL ONLY NOT FOR CONSTRUCTION

provisions of "Changes in the Work" under Section 3 of these General Conditions or by acts or neglect of the City.

3. The delay was unreasonable under the circumstances and not within the contemplation of the parties.

It is expressly understood and agreed that delays caused by the City will be non-compensable when there are concurrent delays caused by the Contractor. Also, the Contractor shall have no entitlement to additional compensation for any delay where there have been concurrent delays caused by non-compensable delays, including, but not limited to, fire, floods, earthquakes, epidemics, quarantine restrictions, strikes, labor disputes, and freight embargoes.

Contractor's damages and/or additional compensation for delays will consist solely of the extended costs of maintaining the Contractor's Work Site presence. The Contractor will not be entitled to any extended home office overhead.

Compensation for idle time of equipment will be determined in the same manner as determinations are made for equipment used in the performance of extra work paid for on a Force Account basis with the following exceptions:

1. The time for which compensation will be paid will be the actual normal working hours during which such delay conditions exists, but in no case will exceed eight (8) hours in any one day.
2. The days for which compensation will be paid will be each calendar day of the work week (defined elsewhere in the Contract Documents) and Legal Holidays, during the existence of such delay, except that when rental of the equipment is paid for under the provisions in Section 3-1.06C, "Force Account Payment – Equipment," of these General Conditions, no payment will be made for delays in accordance with the

FOR COUNCIL ONLY NOT FOR CONSTRUCTION

provisions of this section.

Actual loss shall be understood to include no items of expense other than idle time of personnel, cost of extra moving of equipment, and cost of longer hauls. Compensation for idle time of equipment will be determined as provided in this section and compensation for idle time of personnel will be determined pursuant to Section 3-1.06A, "Force Account Payment – Labor," of these General Conditions. No markup will be added in either case for Overhead and profit. The cost of extra moving of equipment and the cost of longer hauls will be paid for as extra work as provided pursuant to "Changes to the Work" elsewhere in the Contract Documents.

6-1.10 **TERMINATION.**

6-1.10A **TERMINATION OF AGREEMENT – CONVENIENCE OF CITY.** The Department reserves the right to terminate the Contract at any time and for any reason if the Director determines that to do so would be in the best interest of the City. Any termination which is not based on the circumstances set forth in Section 6.1-10B below shall be effected by delivery to the Contractor of a Notice of Termination specifying the extent to which performance of Work under the Contract is terminated, and the date upon which such termination becomes effective.

Upon the Contractor's receipt of a written Notice of Termination for convenience, the Contractor shall cease Work as to those portions of the project so terminated and shall undertake the steps outlined in Section 6-1.10B below.

1. Acceptance of the Contract as hereinafter specified shall not relieve the Contractor of responsibility for damage to materials except as follows:

   a. The Contractor's responsibility for damage to materials for which partial payment has been made as provided in Section 7-1.07, "Progress

FOR COUNCIL ONLY NOT FOR CONSTRUCTION

Payments," of these General Conditions and for materials furnished by the City for use in the Work and unused shall terminate when the Director certifies that such materials have been stored in the manner and at the locations he or she has directed.

b. The Contractor's responsibility for damage to materials purchased by the City subsequent to the issuance of the notice that the Contract is to be terminated shall terminate when title and delivery of such materials has been taken by the City.

c. When the Director determines that the Contractor has completed the Work under the Contract directed to be completed prior to termination and such other Work as may have been ordered to secure the project for termination, the Contractor will recommend that the City formally accept the Work, and immediately upon and after such Acceptance by the City, the Contractor will not be required to perform any further Work thereon and shall be relieved of its contractual responsibilities for injury to persons or damage to property which occurs after the formal Acceptance of the project by the City.

2. The total compensation to be paid to the Contractor shall be determined by the Director on the basis of the following:

a. The reasonable cost to the Contractor, without profit, for all Work performed under the Contract, including mobilization, demobilization and Work done to secure the project for termination. Reasonable cost will include a reasonable allowance for project Overhead and general

FOR COUNCIL ONLY NOT FOR CONSTRUCTION

administrative Overhead not to exceed a total of seven percent (7%) of Direct Costs of such Work.

b. A reasonable allowance for profit on the cost of the Work performed as determined under subsection (a), provided the Contractor establishes to the satisfaction of the Director that it is reasonably probable that it would have made a profit had the Contract be completed and provided further, that the profit allowed shall in no event exceed four percent (4%) of said cost.

c. The reasonable cost to the Contractor of handling material returned to the vendor, delivered to the Department or otherwise disposed of as directed by the Director.

d. A reasonable allowance for the Contractor's administrative costs in determining the amount payable due to termination of the Contract.

All records of the Contractor and the Contractor's Subcontractors, necessary to determine compensation in accordance with this Section, shall be open to inspection or audit by representatives of the Department at all times after issuance of the notice that the Contract is to be terminated and for a period of three (3) years, and such records shall be retained for that period.

After Acceptance of the Work by the Director, the Director may make payments on the basis of interim estimates pending issuance of the Final Statement, when in his or her opinion the amount thus paid, together with all amounts previously paid or allowed, will not result in total compensation in excess of that to which the Contractor will be entitled. All payments, including payment upon the Final Statement, shall be subject to deduction for prior payments and amounts, if any, to be kept or retained under the provisions of the Contract.

FOR COUNCIL ONLY NOT FOR CONSTRUCTION

In the event that the City terminates this Contract under Section 6-1.10B below and it is determined for any reason that there was not sufficient cause to do so, the City's termination automatically will convert to a termination for convenience under this section and the terms and conditions outlined in this section automatically will be applied to effectuate the Contract termination. Thus, damages to which a Contractor may be entitled as a result of an improper default termination will be limited to the amounts provided for in this section.

The provisions of this section shall be included in all subcontracts.

6-1.10B **TERMINATION OF AGREEMENT - FOR CAUSE.** An "Event of Default" as referred to in this section shall occur if the Contractor:

1. Fails to maintain progress of the Work in accordance with the requirements of the Contract Documents; or
2. Fails to prosecute the Work or any of its components in accordance with the Contract Documents; or
3. Persistently or repeatedly fails or refuses to supply sufficient properly skilled workers or proper material to permit the performance of the Work in accordance with the Contract Documents; or
4. Fails to make prompt payment to Subcontractors or Suppliers in accordance with the respective agreements between the Contractor and the Subcontractor and Contractor and Supplier; or
5. Fails to comply with applicable laws, ordinances or rules, regulations or orders of a public authority having jurisdiction over the Work; or
6. Abandons, assigns or sublets the Contract without approval of the City; or
7. Becomes bankrupt or is subject to appointment of a receiver on behalf of the

FOR COUNCIL ONLY NOT FOR CONSTRUCTION

Contractor; or

8. Otherwise is guilty of a substantial breach of a provision of the Contract Documents.

Upon the City's reasonable belief that there has been an Event of Default by the Contractor, the City may elect to give the Contractor written notice thereof. The Contractor thereafter shall cure the default as soon as possible and in no event after ten (10) Days from the Contractor's receipt of the City's written notice.

If the Contractor does not timely cure its default, the City may, without waiver of any of its other rights and remedies, elect to terminate the Contract, or portion thereof.

Upon the City's election to terminate the Contract, or portion thereof, the City shall have the right to complete the Work, or portion involved, by whatever means and methods it deems expedient, including the hiring of others on such terms as the City deems advisable. The City shall have the right to take possession of the Contractor's materials, plant, tools, equipment and property of any kind provided by or on behalf of the Contractor for the purpose of the Work, or a portion of them, without being responsible to the Contractor for wear and tear. The Contractor shall have no rights in such property during its use by the City. The City shall not be required to obtain the lowest prices for completing the Work or a portion of it but shall make such expenditures as, in the City's sole judgment, best accomplish such completion.

The expense of completing such Work or portion thereof, together with a reasonable charge for engineering, managerial and administrative services, as certified by the City, shall be charged to the Contractor, and the expense so charged shall be deducted by the City out of such monies as may be due or may at any time thereafter become due to the Contractor. In case such expense is more than the sum which otherwise would have been payable to the Contractor under the Agreement, then the Contractor or its surety or sureties shall promptly pay the amount of

FOR COUNCIL ONLY NOT FOR CONSTRUCTION

such excess so due. When the City terminates the Contract under this section, the Contractor shall not be entitled to receive any further payments until the Work is completed and there has been a final settlement of costs of completing the Work covered by such notice of default.

The City will issue to the Contractor a written notice specifying that the Contract, or portion thereof, is terminated. Upon receipt of said written notice and, except as otherwise directed in writing by the City, the Contractor shall:

1. Stop all Work under the Contract; or if partial termination, stop Work relating to the terminated portion of the Agreement;
2. Perform Work the City deems necessary to secure the Work Site for termination including measures to leave the Work Site in a safe condition;
3. Remove equipment from the site of Work, as specified by the City;
4. Take such action as is reasonably necessary to protect materials from damage;
5. Notify all Subcontractors and Suppliers that the Contract or portion thereof is being terminated and that their contracts or orders are not to be further performed unless otherwise authorized in writing by the City;
6. Provide the City with an inventory list of all materials previously produced, purchased or ordered from Suppliers for use in the Work and not yet used in the Work, including its storage location, and such other information as the City may request;
7. Dispose of materials not used in the Work as directed by the Director. It shall be the Contractor's responsibility to provide the City (a) with good title to all materials purchased by the City hereunder, including materials for which partial payment has been made by the City and (b) with bills of sale or other documents of title for such

FOR COUNCIL ONLY NOT FOR CONSTRUCTION

materials;

8. Subject to the prior written approval of the City, settle all outstanding liabilities and all claims arising out of Subcontractors or orders for materials terminated hereunder. To the extent directed by the City, the Contractor shall assign to the City all rights, title and interests of the Contractor under subcontracts or orders for materials terminated hereunder. The City shall be at liberty to negotiate with and engage any Subcontractors who had contracted with the Contractor for the Work;
9. Furnish the City with the documentation required to be furnished by the Contractor under the provisions of the Contract Documents, including, on projects as to which Federal funds are involved, all documentation required under the Federal requirements included in the Agreement; and
10. Take such other actions as the City may direct.

If only a portion of the Work has been terminated, the Contractor shall perform the remainder of the Work in conformity with the Contract Documents and in such a manner as not to interfere with the City or others in their performance and completion of the portion of the Work which was terminated.

The City may recover from the Contractor the amount of any loss or damage, including consequential damages, suffered or incurred as a result of the Contractor's default.

FOR COUNCIL ONLY NOT FOR CONSTRUCTION

SECTION 7

ACCEPTANCE AND PAYMENT

7-1.01 **ACCEPTANCE.** When the Contractor believes that the entire Work is fully and finally completed, including the satisfactory completion of inspections, tests, and documentation specified in the Contract Documents and completion of all punch list and clean-up items, the Contractor shall submit to the City a written request for final Acceptance within fifteen (15) Days thereafter, specifying that the Work is fully and finally completed and the date on which it was completed. Within thirty (30) Days after receipt of the request for final Acceptance, the City will inspect the Work and will either:

1. Reject the request for final Acceptance, specifying the defective and/or uncompleted portions of the Work; or
2. Notify the Contractor that the Work will be accepted by Resolution of the City Council of the City of Roseville, and a Notice of Completion will be caused to be recorded by the City Clerk; or
3. Notify the Contractor that the Work has been accepted by the City but no Notice of Completion will be recorded.

If the City rejects the request for final Acceptance, the Contractor shall promptly remedy the defective and/or uncompleted portions of the Work. Thereafter, the Contractor shall again submit a written request for final Acceptance of the Work, specifying a new date based on the date the defective and/or uncompleted portions of the Work were corrected. Thereafter, the foregoing procedure shall apply successively until the City has verified that the Work is fully and finally completed and accepted the Work by Resolution of the City Council or by written

FOR COUNCIL ONLY NOT FOR CONSTRUCTION

notification from the Director. Immediately upon such Acceptance, the Contractor shall be relieved of the duty of maintaining the Work as a whole.

All warranties commence upon final Acceptance of the Work. The City's final Acceptance of the Work shall not be construed as an acceptance by the City of any latent defects discovered with regard to the Contractor's work. Furthermore, Contractor's obligations under Section 5-1.22 "Responsibility for Damage and Indemnification" shall still remain applicable after the City's grant of final Acceptance of the Work.

Prior to final Acceptance, the Contractor shall submit to the City the Record Documents and Operation and Maintenance Manuals as specified in the Contract Documents.

7-1.02 **SCOPE OF PAYMENT.** The Contractor shall accept the compensation provided in the Contract as full payment for furnishing all labor, materials, tools, equipment, and incidentals necessary to the completed Work and for performing all Work contemplated and embraced under the Contract; also for loss or damage arising from the nature of the Work, or from the action of the elements, or from any unforeseen difficulties which may be encountered during the prosecution of the Work until the Acceptance by the Director and for all risks of every description connected with the prosecution of the Work, also for all expenses incurred in consequence of the suspension or discontinuance of the Work as provided in the Contract; and for completing the Work according to the Contract. Neither the payment of any estimate nor of any retained percentage shall relieve the Contractor of any obligation to make good any defective Work or material.

No compensation will be made in any case for loss of anticipated profits.

7-1.03 **NOTICE OF POTENTIAL CLAIM.** The Contractor shall not be entitled to the payment of any additional compensation for any act or failure to act by the City,

FOR COUNCIL ONLY NOT FOR CONSTRUCTION

including failure or refusal to issue a Change Order, or for the happening of any event, thing, occurrence or other cause unless the Contractor has given the City due written Notice of Potential Claim as hereinafter specified, provided, however, that compliance with this Section 7-1.03 shall not be a prerequisite as to matters within the scope of the notice provisions in Section 6-1.07, "Time of Completion," or the notice provisions in Section 6-1.08, "Liquidated Damages," of these General Conditions, nor to any claim which is based on differences in measurement or errors of computation as to correct quantities.

The written Notice of Potential Claim shall set forth the reasons for which the Contractor believes additional compensation will or may be due, the nature of the costs involved, and, insofar as possible, the amount of the potential claim. The said Notice as above required must have been given to the Director prior to the time that the Contractor shall have performed the Work giving rise to the potential claim for additional compensation, if based on an act or failure to act by the Director, or in all other cases within seven (7) Days after the happening of the event, thing, occurrence or other cause giving rise to the potential claim.

If the Notice of Potential Claim does not include complete information about the claim or the parties do not execute a Contract Change Order in connection with the Notice of Potential Claim, Contractor shall submit complete information about its claim for additional compensation and/or extension of time for performance within fifteen (15) Days after such work is performed. Failure to provide written notice of claim prior to undertaking such work or failure to timely submit a complete and specific information about the claim for additional compensation and/or extension of the time for performance shall be deemed a waiver and abandonment of such claim.

If there is a dispute over any claim, the Contractor shall continue to Work during the dispute resolution process in a diligent and timely manner as directed by the City, and shall be

FOR COUNCIL ONLY NOT FOR CONSTRUCTION

governed by all applicable provision of the Agreement.

The Contractor shall maintain cost records of all Work that is the basis of any dispute. On a daily basis, Contractor shall submit to City completed daily forms, the format of which will be acceptable to the City, with respect to the Contractor's costs of performing the disputed work. These daily forms shall itemize all of Contractor's costs in performing the disputed work, including, but not limited to, all costs relating to materials, labor and equipment with respect to the disputed work. These daily forms shall provide names or identification and classification of affected workers, the hourly rate of pay and hours worked, and also the size, type, and identification number of equipment and hours operated. Said daily work forms shall be duly signed and verified by the Contractor or its authorized representative. The City's receipt of the Contractors' daily forms shall not constitute an approval of the Contractor's claim. Contractor's failure to submit the daily forms on a daily basis shall constitute a waiver of the Contractor's right to claim any additional compensation for the disputed work.

Each Contractor claim shall include full and complete information concerning the Claim. Contractor shall provide a clear, concise recital of the basis, upon which the claim is asserted, including a designation of the provisions of the Contract Documents upon which the claim is based. Contractor shall also include a statement as to the amount of time and/or compensation sought pursuant to the claim; if Contractor's claim arises from an ongoing occurrence, Contractor shall so state in its claim, including a description of the specific Work activities affected by the claim. All costs, expenses or damages and extensions of time claimed shall be described in reasonable detail under the circumstances together with complete supporting documentation.

The City will review any timely Notice of Potential Claim and supporting information

FOR COUNCIL ONLY NOT FOR CONSTRUCTION

submitted by Contractor. In conducting this review, the City shall have the right to require the Contractor to submit such additional or supporting documents, data and other information as the City may require.

If an agreement can be reached which resolves the Contractor's claim, the parties will execute a Contract Change Order to document the resolution of the claim. If the parties cannot reach agreement with respect to the Contractor's claim, the Contractor shall still be obligated to comply with the claim identification provisions identified in these General Conditions, including but not limited to Section 7-1.04.

It is the intention of this Section 7-1.03 that differences between the parties arising under and by virtue of the Contract be brought to the attention of the Director at the earliest possible time in order that such matters may be settled, if possible, or other appropriate action promptly taken. The Contractor hereby agrees that it shall have no right to additional compensation for any Claim that may be based on any such act, failure to act, event, thing or occurrence for which no timely written Notice of Potential Claim as herein required was filed.

7-1.04 **CLAIMS.** Contractor must submit all Claims, for which it has previously submitted a Notice of Potential Claim, prior to Acceptance of the Work. Each such Claim must be sent to the City by registered mail or certified mail with return receipt requested and must contain reasonable documentation to support the Claim.

Upon receipt of a Claim, the City shall conduct a reasonable review of the Claim and, within a period not to exceed forty-five (45) Days, or such further time as mutually agreed upon or necessary pursuant to Public Contract Code Section 9204, the City shall provide the Contractor a written statement identifying what portion of the Claim is disputed and what portion is undisputed. If the City does not respond to a Claim from the Contractor within the time

FOR COUNCIL ONLY NOT FOR CONSTRUCTION

specified herein, such Claim shall be deemed rejected in its entirety.

Any payment due on an undisputed portion of the Claim shall be processed and made within sixty (60) Days after the City issues its written statement.

If the Contractor disputes the City's written response, or if the City does not respond within the time specified herein, the Contractor may demand in writing an informal conference to meet and confer for settlement of the issues in dispute. Upon receipt of a demand in writing sent by registered mail or certified mail, return receipt requested, the City shall schedule a meet and confer conference within thirty (30) Days for settlement of the dispute.

Within ten (10) business days following the conclusion of the meet and confer conference, if the claim or any portion of the claim remains in dispute, the City shall provide the Contractor a written statement identifying the portion of the Claim that remains in dispute and the portion that is undisputed. Any payment due on an undisputed portion of the Claim shall be processed and made within sixty (60) Days after the City issues its written statement. Any disputed portion of the Claim, as identified by the Contractor in writing, shall be submitted to nonbinding mediation, with the City and the Contractor sharing the associated costs equally. The City and the Contractor shall mutually agree to a mediator within ten (10) business days after the disputed portion of the Claim has been identified in writing. If the parties cannot agree upon a mediator, each party shall select a mediator and those mediators shall select a qualified neutral third party to mediate with regard to the disputed portion of the Claim. Each party shall bear the fees and costs charged by its respective mediator in connection with the selection of the neutral mediator. If mediation is unsuccessful, the parts of the Claim remaining in dispute shall be resolved in accordance with Section 7-1.05 below.

7-1.05 **DISPUTE RESOLUTION PROCEDURE.** All Claims not resolved

FOR COUNCIL ONLY NOT FOR CONSTRUCTION

pursuant to Section 7-1.04, shall be resolved pursuant to Public Contract Code Section 10240, et seq.

7-1.06 **STOP PAYMENT NOTICES.** The City, by and through the Department or other appropriate office or officers, may at its option and at any time retain out of any amounts due the Contractor, sums sufficient to cover claims, filed pursuant to Civil Code Section 9350, et seq., including an amount to provide for the reasonable cost of any litigation thereunder.

7-1.07 **PROGRESS PAYMENTS.** Within fifteen (15) Days after the effective date in the Notice to Proceed, but in any event prior to Contractor's first Application for Payment, the Contractor shall submit to the City a detailed Schedule of Values.

Upon its approval, the Schedule of Values will form a basis for determining the compensation payable to the Contractor based on its actual progress of Work with respect to each Lump Sum bid item. The City, prior to any progress payment being made, must approve the Schedule of Values.

At the Director's discretion the approved Schedule of Values may be used as the basis for calculating the adjustment in compensation for a lump sum bid item due to changes ordered by the Director. When an ordered change increases or decreases the quantities shown in an approved Schedule of Values, at the Director's discretion, the adjustment in compensation may be determined in the same manner specified for increases and decreases in the quantity of a bid item of work in accordance with Section 3-1.05(B), "Contract Price Adjustment," of these General Conditions.

The Contractor once in each month shall submit an Application for Payment, for approval by the Director. Contractor's Applications shall be based on the Schedule of Values submitted to the City. These applications shall be supported by: (1) documentation requested by the City to

FOR COUNCIL ONLY NOT FOR CONSTRUCTION

substantiate the payment request; (2) statutory releases from Contractor and all Subcontractors and suppliers pursuant to Civil Code Sections 8132 and 8138; and (3) certified payroll records for the period for which payment is requested. Specifically, the Contractor will submit conditional waivers upon progress payment executed by all contractors and suppliers that will be receiving sums sought in the instant payment request and also submit unconditional waivers upon progress payment executed by all contractors and suppliers that have been paid to the date of the payment request. The Contractor shall certify that the Work for which payment is requested has been accomplished. When requested by the City, the Contractor shall submit receipts, invoices and other documentation that the City requires to be furnished for purpose of evaluating the application.

The City will pay the Contractor within thirty (30) Days after its receipt of an undisputed and properly submitted Application for Payment, after deducting all previous payments, retention, and other sums as described in the Contract Documents. Within seven (7) Days of its receipt of the Contractor's Application for Payment, the City will determine whether it complies with the provisions of the Contract Documents. As appropriate, the City will return the application to the Contractor accompanied by a document prepared by the City setting forth the reasons for the rejection. Thereafter, the Contractor shall correct and resubmit the Application for Payment. Progress payments may be withheld for Work that is not performed in accordance with the Contract Documents.

The City may deduct the following from each progress payment:

1. An amount equal to one hundred and twenty-five percent (125%) of the amount claimed under any stop payment notice or other lien filed against the Contractor, which includes an amount to provide for the reasonable cost of any litigation

FOR COUNCIL ONLY NOT FOR CONSTRUCTION

thereunder.

2. Any Liquidated Damages or Assessments that have accrued as of the date of the Application for Payment.
3. Any sums expended by the City in performing any of the Contractor's obligations under the Agreement that the Contractor has failed to perform.
4. Any other sums that the City is entitled to recover from the Contractor under the terms of the Contract including damages to the City's property.
5. The failure of the City to deduct any of the above identified sums from a progress payment shall not constitute a waiver of the City's right to such sums.

No such estimate or payment shall be construed to be an acceptance of any defective Work or improper materials.

Under no circumstances will the City make payment to unlicensed Contractors. As a condition of payment, the Contractor is required to maintain the applicable Contractor's license as identified in the Notice to Contractors for the duration of the Work.

7-1.08 **PAYMENT FOR MATERIALS AND EQUIPMENT ON HAND.**

Partial payments may be made to the extent of seventy-five percent (75%) of the cost of materials and equipment plus delivery to be incorporated in the Work, provided that such materials and equipment meet the requirements of the Contract Documents and are delivered to acceptable sites on the plant site or at other sites in the vicinity that are acceptable to the City and only with the prior written approval by the City. Such delivered costs of stored or stockpiled materials and equipment may be included in the next progress payment after the following conditions are met:

A. Equipment and materials will only be eligible if given conditional or final

FOR COUNCIL ONLY NOT FOR CONSTRUCTION

Acceptance by the Director and are in apparent compliance with favorably reviewed Submittals.

B. Only equipment or materials which have received favorable review of Shop Drawings will qualify.

C. The material or equipment has been stored or stockpiled adequately protected against damage in a manner acceptable to the Director at an approved site.

D. The Contractor has furnished the Director with acceptable evidence of the quantity and the quality of such stored or stockpiled materials or equipment with identification of where they will be incorporated into the project with Specification reference.

E. The Contractor has furnished the Director with satisfactory evidence that the material or equipment and transportation costs have been paid.

F. The Contractor has furnished the City legal title (free of liens or encumbrances of any kind) and lien releases to the material or equipment so stored or stockpiled.

G. The Contractor has furnished the City evidence that the material or equipment so stored or stockpiled is insured against loss by damage to or disappearance of such materials at any time prior to use in the Work.

It is understood and agreed that the transfer of title and the City payment for such stored or stockpiled materials or equipment shall in no way relieve the Contractor of its responsibility for furnishing and placing such materials or equipment in accordance with the requirements of the Contract Documents.

In no case will the amount of progress payments for materials or equipment on hand exceed the Contract Price for such materials or equipment or the Contract Price for the Contract item in which the material is intended to be used.

No partial payment will be made for stored or stockpiled living or perishable plant

FOR COUNCIL ONLY NOT FOR CONSTRUCTION

materials.

The Contractor shall bear all costs associated with the progress payment of stored or stockpiled materials or equipment in accordance with the provisions of this Section.

7-1.09 **RETENTION ON PROGRESS PAYMENTS.** From each progress payment estimate, five percent (5%) will be deducted and held in retention by the City. The remainder, less any deductions described in Section 7-1.07, "Progress Payments," of these General Conditions, will be paid to the Contractor as progress payments.

Pursuant to Public Contract Code Section 22300, the successful Bidder may submit Securities in lieu of retention payments by the City. Upon the Contractor's request, the City will make payment of funds withheld from progress payments, pursuant to the requirements of California Public Contract Code Section 22300, if the Contractor deposits in escrow with the City or with a bank acceptable to the City, securities eligible for investment under California Government Code Section 16430, bank or savings and loan certificates of deposit, interest bearing demand deposit accounts, standby letters of credit, or any other security mutually agreed to by the Contractor and the City, upon the following conditions:

1. The Contractor shall bear the expenses of the City and the escrow agent in connection with the escrow deposit made.

2. Securities or certificates of deposit to be placed in escrow shall be of a value at least equivalent to the amounts of retention to be paid to the Contractor pursuant to this section.

3. Contractor shall enter into an escrow agreement satisfactory to the City, which agreement shall be substantially similar to the form provided in California Public Contract Code section 22300.

FOR COUNCIL ONLY NOT FOR CONSTRUCTION

4. The Contractor shall obtain the written consent of the surety to such agreement.

7-1.10 **FINAL PAYMENT.** Final payment will be made only after Contractor has achieved Final Completion of the Work pursuant to the provisions of Section 7-1.01, "Acceptance," of these General Conditions. Before final payment can be made, the Contractor shall have furnished the City with the following:

1. All Record Documents, catalogues, instruction sheets and information as required by the Contract Documents.

2. Conditional Waivers and Releases Upon Final Payment executed by Contractor and all Subcontractors and Suppliers, as provided by Civil Code Section 8136. Unconditional Waivers and Releases Upon Final Payment, as provided in Civil Code Section 8138, executed by Contractor and all Subcontractors and Suppliers, must be provided for all Subcontractors and Suppliers that have been paid in full.

Within thirty (30) Days of the date of the City's Acceptance of the Work, the Contractor shall prepare and submit a Final Invoice, showing the proposed total amount due the Contractor, segregated by Bid item quantities, Change Order Work, and other basis for payments; deductions made or to be made for prior payment; and amounts previously retained. Prior invoices and payments shall be subject to correction in the proposed Invoice for Final Payment. Payments to the Contractor will be made only for actual quantities of the Contract items of work constructed in accordance with the Contract Documents.

The City will review the Contractor's proposed Final Invoice and necessary changes or corrections will be forwarded to the Contractor. Within ten (10) Days thereafter, the Contractor

FOR COUNCIL ONLY NOT FOR CONSTRUCTION

shall submit a revised proposed Final Invoice incorporating changes or corrections made by the City together with any new claims resulting therefrom. Upon approval by the City, the corrected proposed Final Invoice will become the approval Final Invoice.

If agreements are reached on all questions regarding the Final Invoice, the City will pay the entire sum found due on the approved application. However, the City will withhold sums sufficient to pay all unsettled claims for which stop payment notices have been filed pursuant to Section 9350, et seq. of the California Civil Code, together with the reasonable cost of any litigation thereunder.

Final payment will be made within thirty (30) Days after receipt of an approved Final Invoice and other required Submittals referenced above or within sixty (60) Days after Acceptance of the work by the City, whichever is later, provided, however, that if an approved Final Invoice has not been submitted within sixty (60) Days after Acceptance of the Work by the City, the City may elect to make payment of sums not in dispute without prejudice to the right of either the City or the Contractor in connection with such disputed sums. Notwithstanding the foregoing, if a Notice of Completion is recorded, final payment shall not be made prior to the expiration of the thirty-five (35) calendar day lien period. The start of this lien period is the date the Placer County Recorder's Office records the Notice of Completion.

The City may withhold from the Final Payment an amount not to exceed one hundred fifty percent (150%) of any amount in dispute between the City and the Contractor.

The making of Final Payment shall not operate to release the Contractor or its sureties from obligations arising under the Contract, the Contract bonds and warranties as herein provided. Specifically, the making of final payment shall not constitute a waiver and release of claims by the City arising from:

FOR COUNCIL ONLY NOT FOR CONSTRUCTION

1. Unsettled or future liens;

2. Failure of the Work to comply with the requirements of the Contract Documents;

3. The terms of any warranties required by or contained in the Contract Documents;

4. The right to any insurance proceeds or the right to make any insurance or bond claims;

5. Any claims with respect to Contractor's obligations of indemnity with respect to claims asserted by third parties; or

6. Any latent deficiencies with the Work or Contractor's fraud.

7-1.11 **CLERICAL ERRORS.** Notwithstanding the provisions of Section 7-1.10, "Final Payment," of these General Conditions, for a period of three (3) years after Acceptance of the Work, all estimates and payments made pursuant to said Section 7-1.10, are subject to correction for clerical errors in the calculations involved in the determination of quantities and payments. The Contractor and the City agree to pay to the other any sum due under the provisions of this Section 7-1.11, provided, however, if the total sum to be paid is less than $100, no such payment shall be made.

7-1.12 **WARRANTY.** Notwithstanding inspections and Acceptance by the City of Work furnished under the Contract Documents, the Contractor hereby unconditionally guarantees that all materials and equipment furnished will be of good quality and new, that the Work will be free from defects in workmanship and materials and that the Work will conform to the requirements of the Contract Documents. Work not conforming to these requirements, including substitutions not properly approved and authorized, may be considered defective.

FOR COUNCIL ONLY NOT FOR CONSTRUCTION

This warranty by the Contractor is in addition to any warranties or guarantees required elsewhere in the Contract Documents. This warranty shall be in effect notwithstanding any disclaimers, or limiting or conditional terms contained in such separate warranties furnished by manufacturers or suppliers.

The Contractor hereby agrees to repair or replace any and all Work, together with any other adjacent Work which may be displaced in so doing, that may prove to be not in accordance with the requirements of the Contract or that may be defective in its workmanship or material during the greater of a period of one (1) year after Acceptance of the Work by the City or the period specified in the Special Conditions, without any expense whatsoever to the City, ordinary wear and tear and unusual abuse or neglect excepted.

The Contractor further agrees, that within ten (10) Days after being notified in writing by the Department of any Work not in accordance with the requirements of the Contract Documents or of any defects in the Work, the Contractor will commence and prosecute with due diligence all Work necessary to fulfill the terms of this warranty, and to complete such Work within a reasonable period of time. In the event Contractor fails to comply, it does hereby authorize the Department to proceed to have such Work done at the Contractor's expense and the Contractor will honor and pay the cost and charges therefore upon demand. The Department shall be entitled to all costs and expenses, including reasonable attorneys' fees, necessarily incurred upon the Contractor's refusal to honor and pay the above costs and charges.

All warranties set forth in the Contract Documents shall be deemed cumulative and not alternative or exclusive. Nothing contained in this section shall be construed to establish a period of limitation with respect to any other obligation, which Contractor has under the Contract Documents or under any separate warranty or guaranty required thereby. The establishment of a

FOR COUNCIL ONLY NOT FOR CONSTRUCTION

specific warranty period relates only to the specific obligation of Contractor to correct defective Work, and it has no relationship to the time within which its obligation to comply with the Contract Documents or applicable provision of law may be sought to be enforced, nor to the time within which proceedings may be commenced to establish Contractor's liability with respect to its obligations other than specifically to correct the Work. Without limiting the foregoing, it is understood and agreed that Contractor shall remain responsible for latent defects with its work, regardless of the expiration of any warranty period set forth in the Contract Documents.

7-1.13 **WARRANTY OF TITLE.** No material, supplies, or equipment for the Work under this Contract shall be purchased subject to any chattel mortgage, security agreement, or under a conditional sale or other agreement by which an interest therein or any part thereof is retained by the seller or supplier. The Contractor warrants good title to all material, supplies, and equipment Installed or incorporated in the Work and agrees upon completion of all Work to deliver the Premises, together with all improvements and appurtenances constructed or placed thereon by it, to the City free from any claim, liens, security interest, or charges, and further agrees that neither the Contractor nor any person, firm, or corporation furnishing any materials or labor for any Work covered by this Contract shall have any right to a lien upon the Premises or any improvement or appurtenances thereon. Provided, that this shall not preclude the Contractor from Installing metering devices and other equipment of utility companies, the title of which is commonly retained by the utility company. In the event of the Installation of any such metering device or equipment, the Contractor shall advise the City as to the legal owner thereof. Nothing contained in this paragraph, however, shall defeat or impair the right of such persons furnishing materials or labor under any bond given by the Contractor for their protection or any rights under any law permitting such persons to look to funds due the Contractor in the hands of the City.

FOR COUNCIL ONLY NOT FOR CONSTRUCTION

The provisions of this paragraph shall be inserted in all subcontracts and material Contracts, and notice of its provisions shall be given to all persons furnishing materials for the Work when no formal Contract is entered into for such materials.

[END OF GENERAL CONDITIONS]

FOR COUNCIL ONLY NOT FOR CONSTRUCTION

SUPPLEMENTAL CONDITIONS

Project: JM-52 Park Project

FOR COUNCIL ONLY NOT FOR CONSTRUCTION

Scope of Supplemental Conditions

1. The Work shall be performed in accordance with the General Conditions and Department Standards, except as the General Conditions may be modified by the following additional City Standards, incorporated herein by this reference, if so indicated.

	COMMUNITY DESIGN GUIDELINES 311 Vernon Street, Roseville, CA 95678
X	SPECIFICATIONS FOR COMMERCIAL CONSTRUCTION (ELECTRIC) 2090 Hilltop Circle, Roseville, CA 95747
X	PARKS CONSTRUCTION STANDARDS 316 Vernon Street, Suite 400, Roseville, CA 95678
X	DESIGN AND CONSTRUCTION STANDARDS 311 Vernon Street, Roseville, CA 95678
	OTHER

Above documents are available at: www.roseville.ca.us.

2. Numbering in these Supplemental Conditions conforms to that in the General Conditions. The existence of a section in these Supplemental Conditions means that the corresponding section in the General Conditions is modified in some respect. Unless otherwise specified, the modified General Condition is deleted entirely and the provisions of these Supplemental Conditions are substituted.

FOR COUNCIL ONLY NOT FOR CONSTRUCTION

SECTION 1. DEFINITIONS AND TERMS

1-1.24 **DEPARTMENT.** Section 1-1.24 of the General Conditions is amended to include the following:

The Department for Contract Administration is the Parks, Recreation & Libraries Department of the City of Roseville.

FOR COUNCIL ONLY NOT FOR CONSTRUCTION

SECTION 2. CONTROL AND SCOPE OF THE WORK

2-1.08 **SUBMITTALS.** Section 2-1.08 of the General Conditions is amended to include the following:

The time allowed for review of each submittal is 10 Days after receipt of the submittal by the Director.

FOR COUNCIL ONLY NOT FOR CONSTRUCTION

SECTION 3. CHANGES IN THE WORK

There are no amendments to the General Conditions.

FOR COUNCIL ONLY NOT FOR CONSTRUCTION

SECTION 4. CONTROL OF MATERIALS

There are no amendments to the General Conditions.

FOR COUNCIL ONLY NOT FOR CONSTRUCTION

SECTION 5. LEGAL RELATIONS AND RESPONSIBILITY

5-1.14 **AIR POLLUTION CONTROL AND ASBESTOS.** Section 5-1.14 of the General Conditions is amended to include the following:

To the best of the City's knowledge, asbestos is NOT present in the vicinity of the Project. Additional information shall be made available to Contractor upon request.

FOR COUNCIL ONLY NOT FOR CONSTRUCTION

SECTION 6. PROSECUTION AND PROGRESS

6-1.04 **PROGRESS SCHEDULE.** Section 6-1.04F of the General Conditions is amended to include the following:

Progress schedules showing project completion dates more than 0 Days earlier than specified in Section 6-1.07 shall be rejected.

6-1.07 **TIME OF COMPLETION.** Section 6-1.07 of the General Conditions is amended to include the following:

The Contractor shall begin Work within 10 business days after receiving a Notice to Proceed and shall diligently prosecute the Work to completion. The Work shall be completed within 100 business days of the Notice to Proceed.

If landscaping plants require an establishment period, that period will be 90 calendar days. Start of the establishment should be as outlined in the Specifications.

6-1.08 **LIQUIDATED DAMAGES.** Section 6-1.08 of the General Conditions is amended to include the following:

The amount of Liquidated Damages is the sum of $ 1,000 per Day.

FOR COUNCIL ONLY NOT FOR CONSTRUCTION

SECTION 7: ACCEPTANCE AND PAYMENT

There are no amendments to the General Conditions.

[END OF SUPPLEMENTAL CONDITIONS]

FOR COUNCIL ONLY NOT FOR CONSTRUCTION

SPECIFICATIONS

Project: JM-52 Park Project

FOR COUNCIL ONLY NOT FOR CONSTRUCTION

SPEC

TABLE OF CONTENTS

TABLE OF CONTENTS
SECTION 00 31 46 PERMITS
SECTION 01 10 00 SUMMARY OF WORK
SECTION 01 57 23 STORM WATER POLLUTION CONTROL
SECTION 03 30 00 SITE CONCRETE
SECTION 12 93 00 SITE FURNISHINGS
SECTION 26 00 00 SITE ELECTRICAL
SECTION 31 10 00 CLEARING AND GRUBBING
SECTION 31 20 00 EARTHWORK
SECTION 32 15 40 DECOMPOSED GRANITE PAVING
SECTION 32 84 00 IRRIGATION SYSTEM
SECTION 32 90 00 PLANTING
SECTION 33 00 00 UTILITIES

APPENDICES

A: Irrigation Schedules # pages
B: Soils Fertility Report # pages
C: Permits (provided by the City/Project Owner) # pages
D: Environmental Document (provided by the City/Project Owner) # pages
E: Geotechnical Report (provided by the City/Project Owner) # pages

FOR COUNCIL ONLY NOT FOR CONSTRUCTION

FOR COUNCIL ONLY NOT FOR CONSTRUCTION

SECTION 00 31 46
PERMITS

PART 1 - GENERAL

1.01 General Requirements

A. The requirements set forth in the General Conditions shall be in addition to the standards provided herein.

B. The requirements set forth in the Supplemental Conditions shall be in addition to the standards provided herein.

C. The intent of this Section is to furnish bidders with the known list of required permits for the Work under the Contract Documents. Bidders should note the list is not necessarily complete and additional requirements may exist or arise.

1.02 Permits

A. The Contractor shall obtain copies of the following permits from the Project Manager. Copies of these shall be obtained prior to start of work and shall be kept on the jobsite.

1. State Water Resources Control Board General Permit for Discharges of Storm Water Associated with Construction Activity.
2. City of Roseville Department of Development Services, Improvement Plan Permit for all Work related to this project.
3. City of Roseville Department of Development Services, Building Permit for all structural items associated with this project, including, but not limited to, lighting, , shade structures, drinking fountain (plumbing code), and miscellaneous electrical.

B. Contractor shall comply with the conditions of these permits, and will be solely responsible for all costs associated with meeting permit conditions unless specifically specified otherwise in these Contract Documents.

PART 2 - PRODUCTS

Intentionally left blank.

PART 3 - EXECUTION

Intentionally left blank.

FOR COUNCIL ONLY NOT FOR CONSTRUCTION

END OF SECTION

FOR COUNCIL ONLY NOT FOR CONSTRUCTION

SECTION 01 10 00
SUMMARY OF WORK

PART 1 - GENERAL

1.01 General

A. The requirements set forth in the General Conditions shall be in addition to the standards provided herein.

B. The requirements set forth in the Special Conditions shall be in addition to the standards provided herein.

1.02 Project Description

A. Project Name and address:

JM-52 Park
5097 Misty Ridge Drive

B. Project description/scope of work:

The scope of this project includes … 1.5 acre park improvements

C. The Contractor, prior to submission of his bid, shall visit the site and become familiar with the physical site conditions, the plans and specifications. All existing site conditions, apparent in a detailed, on-site inspection, shall be a part of the project. Submission of a bid shall represent the Contractor's acknowledgment of the existing site conditions and its effect on the implementation of the contract documents.

1.03 Engineering

A. Field Engineering, as a part of this contract, shall include:

1. Layout of the work and establishment of lines and grades.
2. Said work to be performed by a California Registered Civil Engineer or a California licensed Land Surveyor.
3. When discrepancies between the drawings and actual site conditions are discovered, notify the Inspector for instruction on how to proceed.
4. All work shall:
   a) Establish indicated layout in relation to the property survey and existing reference points.
   b) Establish and preserve permanent reference points during the course of construction.
   c) Set locations and elevations of all site elements as required for proper completion of the work.

FOR COUNCIL ONLY NOT FOR CONSTRUCTION

1.04 Permits, Fees and Notices

A. The Contractor and/or his assigned Subcontractors shall obtain any and all required permits (beyond those provided by the City's Project Manager) from all governing authorities, including other City Departments, prior to start of construction.

1.05 Construction Plans

A. Any discrepancies or omissions found in the Contract Documents shall be reported to the City's project manager immediately. The City's project manager will clarify discrepancies or omissions, in writing, within a reasonable time.

B. In resolving inconsistencies among two or more sections of the Contract Documents, precedence shall be given in the following order:

1. Notice to Contractors
2. Special Provisions
3. City of Roseville Parks Construction Standards
4. City of Roseville Design and Construction Standards
5. Drawings

Addenda shall take precedence over all sections referenced therein. Figure dimensions on Drawings shall take precedence over scale dimensions. Detailed Drawings shall take precedence over general Drawings.

1.06 Definitions

A. The term "accepted" where used within, shall mean accepted in writing by the City of Roseville's Project Manager.

B. The term "Inspector", where noted, shall mean the project representative, appointed by the City of Roseville, who will oversee the project on a day-to-day basis.

C. The term "Project Manager", where noted, shall mean the project representative appointed by the Parks Department.

D. The term "Consultant", where noted, shall mean the prime Consultant listed on the cover sheet of these Specifications.

E. The term "accepted equal", where used herein, shall mean the equal in the opinion of the Project Manager, in consultation with the Consultant, when necessary, and as accepted in writing by the Project Manager.

F. The term "Project Owner", where used herein, shall mean the landowner or developer.

G. The term "provide", where used herein, shall mean furnish and install complete.

H. The term "as selected", where used herein, shall mean as selected by the Consultant and as accepted by the Project Manager.

FOR COUNCIL ONLY NOT FOR CONSTRUCTION

I. The term “substantially complete”, where used herein, shall mean the state of which the project can be used in the manner of which it is intended with the exception of minor items as determined by the Project Manager.
J. See Section 1 of the General Conditions for additional definitions and terms.

1.07 Standards

A. Numerous standards are referenced in these contract documents. The referenced standards shall be the current edition as of the date of these contract documents. Also, see Section 4 - 1.02 of the General Conditions.
B. The codes adopted by the City, County, State and federal agencies shall govern minimum requirements for this project. Where codes conflict with these Specifications, the more stringent shall apply, and such conflicts shall be brought to the attention of the Project Manager. Caltrans Standards shall be applied where specifically referenced. In the absence of specific reference requirements in the contract documents, the applicable codes shall govern.
C. In addition to the standards noted in individual sections of these Specifications, standards of the following organizations shall be noted by initials only.
   1. ANSI: American National Standards Institute.
   2. ASTM: American Society for Testing and Materials.

1.08 Submittals

A. All submittals shall be submitted at one time within ten (10) working days from issuance of Notice to Proceed. The review time for submittals shall be as noted in Section 2 - 1.04 of the Special Conditions. Items returned for re- submittal shall be returned to the City within two weeks
B. The Contractor shall include a cover sheet indicating the following (A sample is provided in Section 5: Forms):
   1. Drawing sheet or specification section reference (by section, paragraph and sub-paragraph numbers);
   2. Item description;
   3. Indication whether this item is “as specified” or “proposed substitution” and
   4. A space for itemized response summary, e.g. “reviewed” or “resubmit”.
C. Contractor shall provide submittals electronically in PDF file format and physical product samples as required in specifications. It shall be the Contractor’s responsibility to ensure the summary sheet is included in the submittal package. Incomplete submittal packages (i.e., the lack of a summary sheet or lack an appropriate product sample) will not be reviewed.
D. Proposed substitution requests must include a comparison between the originally specified item and the proposed substitute. The burden of proof of compliance for proposed substitutions with project requirements rests with the Contractor. Coordination of the installation of accepted substitutions, including

FOR COUNCIL ONLY NOT FOR CONSTRUCTION

incidental changes/modifications to accommodate proposed products shall be at no additional cost to the Owner.

E. Where required in specified Section of these Specifications, submittals shall include proof of order of site furnishings, play equipment or other materials within two weeks (ten working days) of receipt of the returned, approved submittal. Submittals of orders shall be made at one time. Exceptions will be considered, with justification.

1.09 Tests

A. In addition to Section 4 - 1.03 of the General Conditions, testing and inspections may be performed by a private testing laboratory. The testing laboratory, provided by the City, shall be under the direction of a California registered civil engineer. All work shall conform to requirements set forth by ASTM B329, and shall be acceptable to the City.

B. Copies of the laboratory reports/results of each test or inspection shall be provided to the Project Manager, Inspector and Contractor.

1.10 Temporary Facilities

A. Sanitary provisions shall be the responsibility of the Contractor. Existing restroom facilities shall be not utilized by the Contractor, his Sub-contractors, or employees thereof, unless specifically accepted by the Project Manager. Provide chemical toilets or water closets and urinals connected to the sewer in a location accepted by the Project Manager.

B. Barricades shall be the responsibility of the Contractor and shall be erected as necessary to protect the property, the construction and the public from hazards due to construction.

C. Signs, other than those identified in these Specifications, shall be prohibited. Notices, required by law, shall be posted and maintained.

1.11 Utilities

A. All utility fees, including, but not limited to, connection fees, installation fees, meters, monthly service fees and cost of utilities used during the course of construction and establishment are considered a direct cost and are the responsibility of the Contractor until project acceptance by City Council.

1.12 Dust/Noise Control Requirements

A. Dust and other air pollution nuisances on or adjacent to the site shall be abated, per Section 2 - 1.15 of the General Conditions. Dirt shall not be allowed to accumulate on streets or sidewalks nor be washed into sewer.

B. Noise from construction operations shall be kept to a minimum. Allowable hours of operations shall be from 7 a.m. to 7 p.m. Monday through Friday. Work on

FOR COUNCIL ONLY NOT FOR CONSTRUCTION

weekends and holidays must be approved by the project manager. Work on weekends and holidays shall not begin before 8 a.m. and must be completed by 8 p.m.

1.13 Tree Replacement Schedule

A. Trees damaged or removed without prior approval shall be replaced at an inch per inch basis on-site, except otherwise accepted. New stock shall follow the table provided:

Plant Size	Inch Value
3 Five Gallon Stock	One Inch
1 Fifteen Gallon Stock	One Inch
1 24” Box Stock	Two Inches
1 36” Box Stock	Three Inches

1.14 Inspection of Construction

A. In addition to the routine inspections performed by the Parks Inspector, portions of work may be inspected by the other city departments. Notify the Parks Inspector and Project Manager a minimum of 48 hours prior to date of inspection.

B. The Parks Inspector shall be the main line of communication between the site superintendent, the project manager and other City department inspectors. Changes in scope of work or standards shall be approved by the project manager.

C. Refer to the parks inspection record. This shall be issued at the Pre-Construction meeting and shall be utilized by the Contractor throughout the course of construction. A completed “hard card” shall be submitted to the Project Manager along with required turn in items (See 1.19 this Section) upon final acceptance of the project. The Notice of Completion shall not be filed until all record documents have been received and accepted.

1.15 Adverse Impacts to Site Conditions Due to Construction

A. Impacts that affect the site conditions to the detriment of the park or streetscape impacts that affect the site conditions to the detriment of the park or streetscape construction or long term viability of the site shall be mitigated by the contractor prior to acceptance of the project. Such impacts shall include, but are not limited to:

1. Soil compaction in non-structural areas;
2. Diesel or gas fuel leaks/spillage;
3. Buried concrete or other construction debris;
4. Hazardous material contamination;
5. Lime treatment in planting areas;
6. and more.

FOR COUNCIL ONLY NOT FOR CONSTRUCTION

1.16 Pre-final (Punch List) Review

A. Notify, in writing, to the Parks Construction Inspector, that the work is substantially complete. Substantially complete is defined as “the state of work where it may be used in a suitable and intended manner with exception of minor corrections”. Partial acceptances will not be granted. Items to be reviewed as a part of substantial completion include:
   1. All construction items
   2. Installation of all site furnishings, including lights and signs
   3. All planting, including mulch installation and weed control of planted areas.
      a) For sodded turf, upon sod installation
      b) For seeded turf, upon second mowing as described in Section 329000, Part 3.11.

   4. The irrigation system is fully functioning as designed and as confirmed by the landscape irrigation audit.

B. Within five workings days of receipt of notification, the Parks Construction Inspector will confirm substantial completion. The Parks Construction Inspector will schedule the punch list walk (pre-final review) within five working days after the project has been determined as substantially complete. A formal punch list will be developed at the punch list walk. The Parks Construction Inspector will provide a copy of the formal punch list to the Contractor within five working days of punch list walk. Performance of the punch list walk does not automatically trigger the start of establishment.
   1. If at any point during this review it becomes apparent the Contractor has not properly prepared for the site review, the inspection shall immediately be terminated and re-scheduled at such a time as the site has been readied for a review. Any costs for the re-scheduling of the review shall be the responsibility of the Contractor. Lack of site preparation could delay start of the establishment period.

C. Concurrent to the pre-final review, the City will make a formal request for all required turn-in items to be submitted to the City. All turn-in items shall be submitted in their entirety to the City’s Park Construction Inspector. Partial turn-in packages will be rejected.

D. Once all turn-in items have been confirmed to be complete and accurate, the establishment period may be considered to begin. The City shall have sole discretion in determining the appropriateness of the commencement of the establishment period and shall notify the developer/contractor in writing of the start and end dates. Portions of the project will not be accepted for establishment prior to the substantial completion of the entire project.

FOR COUNCIL ONLY NOT FOR CONSTRUCTION

1.17 Establishment Period

A. The duration of the establishment period shall be:
   1. For seeded turf in parks: Ninety (90) calendar days, minimum, and until the Notice of Completion (NOC) for City-built parks has been approved by the City Council, or the deed transferring property ownership, has been recorded at the County for Developer-built parks.
   2. For sodded turf in parks: Forty-five (45) calendar days commencing between March 1st and October 31st and sixty (60) calendar days commencing between November 1st and February 28th, and until the Notice of Completion (NOC) for City-built parks has been approved by the City Council, or the deed transferring property ownership, has been recorded at the County for Developer-built parks.
   3. For streetscapes: Thirty (30) calendar days, minimum, and until final acceptance of all related street improvements subject to approval of a Notice of Completion by the City Council. The inclusion of large box trees (36" box and greater) may require an extended establishment period of ninety (90) calendar days, as noted on plans.

B. Active maintenance is required throughout the entire establishment period. Active maintenance is defined as:
   1. All areas within the project site shall be protected against damage including vandalism, erosion, trespass, rodents and other acts. Immediately repair all damaged areas.
   2. All walkways and paved areas shall be kept clean and all debris within planting and turf areas shall be immediately removed.
   3. Automatic irrigation controller shall be fully utilized and irrigation system monitored and adjusted as described in Section 32 84 00 4.03.
   4. All plant and turf maintenance as described in Section 32 90 00 3.11

C. Prior to the start of the final thirty (30) days of establishment:
   1. All punch list items shall be completed.
   2. All certifications and testing shall be completed.
   3. All plantings and turf shall be thriving and in a healthy condition.
   4. The lack of active maintenance prior to the final thirty (30) days may constitute a delay in the start of the final thirty (30) days of the establishment period.

1.18 Final Review

A. One (1) week prior to the end of the establishment period, a final on-site review shall be conducted to review project readiness for final turn-over. All punch list items must be satisfactorily addressed prior to the final review.

FOR COUNCIL ONLY NOT FOR CONSTRUCTION

B. The project shall be prepared and cleaned per Section 2 - 1.12 of the General Conditions; the turf shall be mowed; and the irrigation heads shall be adjusted appropriately one day prior to the scheduled final review.
C. Acceptance of the project shall be considered “field accepted” and a recommendation will be forwarded to the City Council for “final acceptance” per Section 7 - 1.01 of the General Conditions.
D. An unaccepted project shall extend the establishment period until such time as the unaccepted portions of the project have been reviewed and field accepted by the Inspector and Project Manager.
E. Turn over for City maintenance shall occur only after:
    1. The specified duration of the establishment period has been successfully completed.
    2. If required, the deed transferring property ownership, has been recorded at the County.
    3. A Notice of Completion (NOC) for city-built parks and for streetscapes has been approved by the City Council.
F. Contractor shall provide a written guarantee covering all improvements associated with this project. See 1.19 – Warranties and Guarantees.

1.19 Record Documents

A. Record documents or as-built plans shall be maintained on-site and updated routinely as specified in Section 2 - 1.13 of the General Conditions. Record documents shall include **all items under the contracted scope of work**.
B. Record documents shall be submitted:
    1. two sets 11 x 17 laminated reductions of the irrigation plan illustrating with colors the individual controller stations; and
    2. Electronically submit PDF scanned images (in color) of the verified/initialed as-built drawings.
    3. For City of Roseville CIP projects, SWPPP binder.

1.20 Warranties and Guarantees

A. Warranties are required under various Sections of these Specifications. Prior to final acceptance, the Contractor shall combine all warranties into a single electronically submitted PDF, . All warranties shall be clearly labeled and the number of years highlighted. Also, see Sections 7 - 1.10 and 7 - 1.11 of the General Conditions.
    1. Warranties for equipment shall be submitted in the manufacturer’s standard form and shall be countersigned by the subcontractor or supplier and the Contractor.

FOR COUNCIL ONLY NOT FOR CONSTRUCTION

2. All other warranties shall be provided in the following format, written on subcontractor's or supplier's letterhead, signed by the subcontractor or supplier and countersigned by the Contractor:

WARRANTY FOR _____ YEARS

"We hereby warrant that the *product* which we have installed at *project name* has been done in accordance with the contract documents, and that the work, as installed will fulfill the warranty requirements included in the Specifications.

We agree to repair or replace any or all of our work, together with any other adjacent work which may be displaced by so doing, that may prove to be defective in its workmanship or material within the warranty period stated above commencing from the date of final acceptance of the above named project by the City of Roseville's City Council, without additional expense to the City, ordinary wear and tear and unusual abuse or neglect excepted.

In the event of failure to comply with the above conditions within thirty (30) days of notification by the City, we collectively or separately do hereby authorize the City to proceed with the repairs or replacement of such defects at our expense. Payment of said costs and charges will be forwarded to the City upon demand.

Signed: _____ _____
Subcontractor or Supplier Date

Countersigned: _____ _____
Contractor Date

B. Guarantees shall be a minimum of one (1) year for all plant material, including trees and shrubs. The guarantee shall state that plant materials (trees & shrubs) to be free of all defects or disease and all plants are in a healthy and thriving condition at the completion of the contract. Deciduous plant material shall be warranted beyond the time of contract completion until such time as growth becomes evident.

PART 2 - PRODUCTS

Intentionally left blank.

FOR COUNCIL ONLY NOT FOR CONSTRUCTION

PART 3 - EXECUTION

Intentionally left blank.

END OF SECTION

FOR COUNCIL ONLY NOT FOR CONSTRUCTION

SECTION 01 57 23
STORM WATER POLLUTION CONTROL

PART 1 - GENERAL

1.01 General

A. The requirements set forth in the General Conditions shall be in addition to the standards provided herein.
B. The requirements set forth in the Special Conditions shall be in addition to the standards provided herein.

1.02 References

A. State Water Resources Control Board Order No. WQ 2022-0057 DWQ National Pollutant Discharge Elimination System General Permit No. CAS0000002, for Storm Water Discharges Associated with Construction and Land Disturbance Activities.
B. CASQA California Stormwater BMP Handbook – Construction, October 2024.

1.03 Definitions

A. NOI: Notice of Intent
B. NOT: Notice of Termination
C. QSP: Qualified SWPPP Practitioner
D. QSD: Qualified SWPPP Developer
E. SWPPP: Storm Water Pollution Prevention Plan
F. SWRCB: State Water Resources Control Board
G. NPDES: National Pollutant Discharge Elimination System
H. WDID: Waste Discharger Identification number
I. BMP: Best Management Practices

PART 2 - PRODUCTS

Intentionally left blank.

PART 3 - EXECUTION

3.01 SWPPP

A. Comply with State Water Resources Control Board Order No. WQ 2022-0057-DWQ National Pollutant Discharge Elimination System General Permit No. CAS000002, for Storm Water Discharges Associated with Construction and Land Disturbance Activities.

FOR COUNCIL ONLY NOT FOR CONSTRUCTION

B. A SWPPP has been developed for this project. The SWPPP is a dynamic document and will change as conditions (weather or construction phases) warrant.
C. Implementation of the SWPPP is the responsibility of the Contractor and a part of this project. Costs associated with implementation and maintenance of the BMPs per the SWPPP shall be included in the lump sum base bid.
D. Major changes to the SWPPP shall be reviewed by the City's QSD prior to implementation. Cost associated with the major changes will be paid for using the unit cost listed in the Additions or Deletions Sheet of the Proposal.
E. The City's QSD/QSP will perform weekly inspections of the jobsite. Implementation of and minor changes to the SWPPP as directed by the City's QSP shall be incidental to the Work. Contractor shall start all inspection corrective actions within 72 hours of observation, and complete as soon as possible.
F. All BMPs installed will be inspected by the City's QSD/QSP for compliance with the SWPPP and BMP Fact Sheets. BMPs that are not in compliance shall be brought into compliance by the Contractor at no cost to the City.
G. An electronic copy of the SWPPP will be provided to the contractor. The contractor shall keep a binder on-site for inspection reports, and will make the inspection binder available upon request.
H. The SWPPP shall be readily available throughout the course of construction and until the NOT has been accepted by SWRCB. The SWPPP shall be made available upon request by a representative of the Regional Water Quality Control Board, State Water Resources Control Board, United States Environmental Protection Agency, or City' storm water staff.
I. At the end of the establishment period, the Contractor shall submit copies of all inspection reports and sampling and analysis results to the City's Project Manager.

3.02 Schedule

A. Contractor shall develop a Water Pollution Control Schedule that describes the timing of grading or other work activities that could affect water pollution. The schedule shall be updated by the Contractor to reflect changes in the Contractor's operations that would affect the necessary implementation of water pollution control practices. The typical sequence of work shall be adjusted by the Contractor based on weather conditions and forecasted rain events. The schedule is considered an appropriate and applicable BMP.

3.03 Penalties and fines

A. Contractor is responsible for all penalties and fines assessed to or levied on the project related to the implementation of the SWPPP.

FOR COUNCIL ONLY NOT FOR CONSTRUCTION

B. In an effort to maintain compliance with the General Permit, the Contractor may be asked to make changes to the BMPs. If the Contractor is unable to perform these services in a timely manner the City reserves the right to address any areas of concern and deduct the cost from the contract.

3.04 BMP's

A. Construction BMP's shall be installed per the Erosion / Sediment Control Plan and project SWPPP, and in accordance with the CASQA California Stormwater BMP Handbook. Use of alternative BMP's will be reviewed and accepted at the discretion of the City's QSD.

3.05 Cleaning

A. Thoroughly clean all areas where work has occurred. Remove from the site excess material, debris and rubbish.

B. Take all precautions to protect completed work. Immediately repair or replace all damaged areas due to tire ruts, erosion, compaction failure, etc. Keep all erosion control measures intact.

3.06 Winter Construction Suspension

A. Contractor shall include a winter construction suspension as part of the construction schedule. The counting of working days will be suspended during the winter suspension period. It is at the City's sole and complete discretion to determine the start and end dates of the winter construction suspension. The City will notify the Contractor 10 working days before the start of the winter construction suspension. The City will notify the Contractor 10 working days before the end of the winter construction suspension. The Contractor shall begin work within 15 calendar days after receiving the notice of the end of the winter construction suspension.

B. Contractor shall include an allowance of *($15,000)* for the winter construction suspension per the bid documents. Costs associated with preparing the site for the winter construction suspension and costs associated with corrective actions required during the winter construction suspension will be paid for using the allowance on a Time & Materials Basis according to the allowable mark-ups in the project's General Conditions, or per an approved lump sum or unit price quote. Costs to implement and maintain the BMPs per the Erosion and Sediment Control Plan are excluded from the winter suspension allowance and shall be included in the lump sum base bid.

C. Prior to the winter construction suspension, stabilize all exposed soils at the direction of the City's QSD/QSP. In addition, all adjacent drainage inlets shall be protected and perimeter control shall be installed and in good repair.

FOR COUNCIL ONLY NOT FOR CONSTRUCTION

D. Traffic on the construction site shall be kept to minimum. All traffic entering or exiting the site must use the stabilized construction entrance.
E. Where there are areas of concentrated runoff flows, Contractor shall protect the soil from erosion.
F. Per the Construction General Permit Requirements, inspections by the City's QSD/QSP will continue into and through the winter suspension period. Inspections will occur before, during, and after each Qualifying Precipitation Event (0.5" or more precipitation forecast in a 24 hour period) and at least once per week. Contractor shall start all inspection corrective actions within 72 hours of observation, and complete as soon as possible.
G.
H. The City's QSD/QSP will be sampling discharges that occur during regular working hours during a Qualifying Precipitation Event (QPE) to ensure compliance with runoff standards for pH and turbidity. If the water sampling indicates compliance issues, Contractor shall make repairs or adjustments to BMPs immediately, and respond to any such requests within 24 hours.

END OF SECTION

FOR COUNCIL ONLY NOT FOR CONSTRUCTION

SECTION 03 30 00
SITE CONCRETE

PART 1 - GENERAL

1.01 General Requirements

A. The requirements set forth in the General Conditions shall be in addition to the standards provided herein.

B. The requirements set forth in the Supplemental Conditions shall be in addition to the standards provided herein.

C. The standards set forth in the City of Roseville Design and Construction Standards and the City of Roseville Parks Construction Standards, latest editions, shall be in addition to the standards provided herein.

1.02 Description

A. Furnish all labor, materials and equipment for the complete installation of all concrete work, flatwork and poured-in-place as shown in the Plans and as specified herein.

1.03 References

A. Caltrans Standard Specifications, latest edition.

B. California Building Code (CBC) and California Administrative Code (Title 24), latest editions.

1.04 Quality Assurance

A. For all flatwork, the Contractor shall pour a six-foot by six-foot (6’ x 6’) sample of each type of finish specified for review and acceptance by the Project Manager prior to pouring any concrete. The accepted samples shall remain on-site and intact until all concrete work has been completed. The quality of the concrete work shall be measured by the accepted samples.

B. During the course of construction, a qualified testing laboratory shall obtain samples as determined by the Inspector and conforming to federal and state codes and standards. Such costs shall be paid for by the City. Re-tests and removal of below acceptable strength concrete shall be borne by the Contractor. The Contractor shall cooperate with the testing during the course of obtaining such samples.

C. Variances in surface grades of more than 1/8”, as measured by a straight edge ten feet (10") long, shall be corrected to the satisfaction of the Inspector. Remove all areas where standing water occurs, including any surface irregularities.

FOR COUNCIL ONLY NOT FOR CONSTRUCTION

1.05 Handling and Storage

A. Comply with ASTM C-94, “Specifications for Ready Mix Concrete” for the batch, mix and transport of concrete.
B. Mix and deliver only the amount that will be poured immediately.

1.06 Record Drawings

A. The Contractor shall keep an accurate record of the as-built conditions of the site concrete. These records shall be updated daily and kept at the construction site. At any time, the Inspector may examine the conditions of the “as-builts” to ensure compliance of the above.

PART 2 - PRODUCTS

2.01 Concrete

A. Concrete for play area curbs, sidewalks, and accessible ramps shall conform to the provisions of Section 90-2 “Minor Concrete” of the Caltrans Standard Specifications. Cementitious material shall be „Type II Modified” and shall contain no less than 505 pounds of cementitious material per cubic yard. Aggregate shall be not greater than one-inch or smaller than 3/8-inch. Submit concrete analysis for review and acceptance prior to placement of concrete.

2.02 Fiber Reinforcement

A. Fibers for concrete shall conform to ASTM C1116 Type III and manufactured specifically for the secondary reinforcement of concrete. Fiber length to be 0.50” or 0.75”. Acceptable products include Fibermesh 150, as manufactured by Sika USA, or accepted equal.

2.03 Expansion Joint Material

A. Fiber expansion joint shall conform to ASTM-1751 and shall be a non-extruding resilient filler. Filler shall have preserve attributes and high quality bituminous materials.
B. Apply Sikaflex elastomeric sealant, or accepted equal, over all expansion joints.

2.04 Concrete Forms

A. All forms shall be new at the start of the project.. Minimum size lumber shall be 2 x 6.
B. Radius bends shall be formed by spring steel forms or laminated boards, as required.
C. Plywood shall be 5/8”, Class I, exterior grade as outlined in APA “Guide to Plywood Grades”. Omit mill oiling treatment.

FOR COUNCIL ONLY NOT FOR CONSTRUCTION

PART 3 - EXECUTION

3.01 Poured-In-Place Concrete

A. Concrete for hardscape or flatwork shall be placed on subgrade compacted per geotechnical engineer recommendations.. Prior to placement of concrete, a soils compaction test must be performed by an accepted soils testing professional on a representative number of locations along the flatwork area. The City or project owner shall provide the initial test. The results of these tests must be available and meet acceptable levels prior to pouring. Re-tests and re-work of any area, as directed by the soils professional, shall be the responsibility of the Contractor.

B. Construct forms to conform to the shapes, dimensions and details shown on the Plans. All forms shall be true to lines, plumb, level and square.

C. Forms shall not leak, spread, shift or settle when concrete is placed.

D. All forms shall carry dead and live loads and shall not deflect more than 1/8" between supports after placement of concrete.

E. All forms shall be thoroughly soaked a minimum of twelve (12) hours prior to pouring of concrete. Forms shall be treated per manufacturer's recommendations.

F. Reuse of forms may be allowed at the discretion of the Inspector. Reused forms shall be cleaned and free of defects that would affect the final concrete finish.

G. Concrete footings shall be formed only when excavations slump or cave in. Over-excavate the trench or footing diameter to accommodate the forms' installation and removal. Apply water to moisten soil. Do not allow water to create mud or ponding.

3.02 Fiber Reinforcement

A. Install per manufacturer's instructions. Apply at the batch plant prior to delivery. Thoroughly mix fiber material to avoid "clumping".

3.03 Expansion Joints

A. Expansion joints shall be placed where vertical elements meet horizontal paving unless otherwise noted on the Plans. This shall include vertical expansion joints on play area curb walls, buildings, shade structures, walls and/or planters. The corners of the paving shall be tooled at the expansion joints. Trim exposed fibers which protrude above or beyond the finish surface of paving or the finish surface of the wall.

3.04 Control Joints for Concrete Sidewalks

A. Control joints shall be per Parks Standard Details with deep, straight and finished with rounded edges. Control joints shall be placed (on-center) a

FOR COUNCIL ONLY NOT FOR CONSTRUCTION

distance equal to the width of the concrete walkway, unless otherwise shown on the Plans. For example a ten-foot wide walkway shall have control joints placed ten feet on center. Control joints shall not dead-end into an adjacent panel, and shall not create acute angles that are prone to break off.

3.05 Placement of Concrete

A. Do not pour concrete in weather below 40 degrees F. or when temperatures are predicted to fall below freezing within 24 hours, except with prior authorization.

B. Concrete shall be transit mixed according to ASTM C-94. Discharge ready-mixed concrete from transport vehicle while the concrete is still plastic and before stiffening occurs.

.

C. Concrete shall be deposited up to the finished height of the forms and up to the adjacent joint. No partial pours will be allowed. Excess material shall be dumped on-site and later removed by the Contractor.

D. Thoroughly consolidate the concrete by manually spading and tamping concrete into all corners of the forms and by utilizing a high-speed mechanical vibrator. Retain a standby vibrator on-site during the course of concrete work. When utilizing the vibrator, take precautions to avoid impact on the forms.

E. After obtaining uniform consolidation, screen tamper all flatwork surfaces, screed and bull float to ensure that large aggregates are pushed below the surface. When it is practical to work on the surface, wood float, steel trowel paving to a uniform surface.

F. Concrete elements shall not exceed the following tolerances:
   1. Linear: 1/8”
   2. Slab deviation: 1/8” in 10’

3.06 Finishes

A. Finishes shall be as shown on the Plans and shall be consistent in quality throughout the project. No visible cracks or discoloration will be accepted. Finishes on vertical surfaces shall be consistent throughout. Vertical expansion joints are spaced as identified on the plans and are smooth with the finish surfaces. All edges for flatwork and vertical surfaces shall be eased at a consistent radius.

B. Upon completion of float finishing, provide the final finish as follows:
   1. Medium Broom Finish: shall be accomplished by pulling a stiff bristle broom across a floated surface. The direction of the broom shall be perpendicular to the path of travel, unless otherwise shown on the Plans.

FOR COUNCIL ONLY NOT FOR CONSTRUCTION

3.07 Removal of Forms

A. Form removal timing to be based on the concrete set strength and environmental conditions unless specifically called out on the drawings.

B. Remove all bolts, nails, ties, wires, etc. a minimum of one inch (1”) below the surface of the concrete. Remove imprints, irregularities or other such defects and patch as directed by the Inspector.

3.08 Curing and Protection

A. Allow adequate time for the concrete to cure. Contractor to take necessary steps to minimize evaporation and maximize the process of hydration.

B. Protect all concrete from damage during the curing period. Should damage occur, Contractor shall take immediate action to repair damage or replace damaged concrete to the satisfaction of the City.

3.09 Clean-Up

A. During the course of this work, the area shall be kept clear and free of debris as realistically as possible. Upon completion of concrete work, completely remove from the site all used forms, hardware, spillage, rejected work and other materials.

B. Remove from site furnishing posts all concrete “slobber”. Re-touch posts as necessary for a clean finish.

END OF SECTION

FOR COUNCIL ONLY NOT FOR CONSTRUCTION

FOR COUNCIL ONLY NOT FOR CONSTRUCTION

FOR COUNCIL ONLY NOT FOR CONSTRUCTION

FOR COUNCIL ONLY NOT FOR CONSTRUCTION

FOR COUNCIL ONLY NOT FOR CONSTRUCTION

FOR COUNCIL ONLY NOT FOR CONSTRUCTION

FOR COUNCIL ONLY NOT FOR CONSTRUCTION

FOR COUNCIL ONLY NOT FOR CONSTRUCTION

SECTION 12 93 00
SITE FURNISHINGS

PART 1 - GENERAL

1.01 General Requirements

A. The requirements set forth in the General Conditions shall be in addition to the standards provided herein.

B. The requirements set forth in the Supplemental Conditions shall be in addition to the standards provided herein.

1.02 Description

A. Furnish all labor, materials and equipment for the complete installation of all site furniture, including play equipment and play surfacing, as shown on the Plans and as specified herein.

1.03 References

A. All play equipment shall meet or exceed the standards set forth by the Consumer Product Safety Commission (CPSC), comply with the Americans with Disabilities Act (ADA), meet all current ASTM standards and be consistent with State and local codes.

B. The play area surfacing shall meet or exceed the fall absorption/impact rates set forth by the CPSC guidelines and ASTM standards. The surfacing shall be an accessible surface and manufactured specifically for play areas.

C. Nothing in the Plans or Specifications is to be construed to permit work not conforming to regulating codes and standards. The Contractor shall furnish without extra charge any material and labor, when required, by the compliance with these rules and regulations, even though the work was not mentioned in these particular Specifications or shown on the Plans.

D. The product manufacturer shall supply complete Specifications for the installation of all site furnishings, including play equipment and play surfacing.

1.04 Submittals

A. Submittals for specified items are required. The Contractor shall submit a materials summary sheet indicating which items will be installed as specified and which items are proposed for substitutions. The Contractor shall submit proof of order within ten (10) working days of the Notice to Proceed, indicating all specified materials have been ordered, noting “as specified” or “substitution proposed”. For the following items, also provide:

FOR COUNCIL ONLY NOT FOR CONSTRUCTION

1. Play Equipment and Swings submittals shall include color samples, manufacturer's materials and parts list, and installation instructions.
2. All items with "color as selected by City" shall include color samples.

B. On the date of the Notice to Proceed, the Contractor shall immediately place the order to purchase all site furnishings, including the play equipment and play surfacing as specified on the Plans and as outlined herein. **Proof of all orders shall be submitted to the Project Manager within ten (10) working days of the Notice to Proceed.**

C. The Contractor shall submit a Certificate of Compliance from a third party certified playground inspector which verifies that the entire playground, including individual components, and surfacing meets or exceeds regulated requirements as described in Section 1.03 above.

1.05 Record Drawings

A. The Contractor shall keep an accurate record of the as-built conditions of the miscellaneous site amenities. These records shall be updated daily and kept at the construction site. At any time, the Inspector may examine the conditions of the "as-builts" to ensure compliance of the above.

PART 2 - PRODUCTS

2.01 Materials

A. Play Equipment shall be custom configuration as shown on the Plans and as specified herein. The equipment shall be as distributed by or accepted equal. Color as selected by the City.

B. Engineered wood fiber shall be clean, engineered wood fiber, manufactured specifically for play areas.
   1. Engineered wood fiber manufacturer shall provide testing certification by an independent testing agency that the results comply with CPSC guidelines and ASTM standards.
   2. Engineered wood fiber shall meet the following requirements: ASTM F1951-99 (ADA Compliance Test) and ASTM F 1292-96 (Shock Absorbency).
   3. Manufacturer shall provide a Certificate of Insurance that shall provide coverage for products liability with the limit of liability not less than $1,000,000.
   4. The manufacturer shall also provide written guarantee for three (3) years from the date of installation against decay and biochemical degradation calling for replacement of defective materials during the guarantee period.

FOR COUNCIL ONLY NOT FOR CONSTRUCTION

5. Manufacturer certifies that the engineered wood fiber has been installed in not less than three (3) sites for periods of not less than three (3) years demonstrating the claims made with regard to these Specifications.

C. Picnic Tables shall be as shown on the Plans and as specified herein. The tables shall be as distributed by *Glen Wurster with All About Play at 916.417.8389 MyTCoat*or accepted equal. Tables shall be in-ground mount and made of perforated steel. Color as selected by the City.

D. Benches shall be as shown on the Plans and as specified herein. The benches shall be as distributed *Glen Wurster with All About Play at 916.417.8389 MyTCoat*or accepted equal. Benches shall be made of perforated steel and surface-mount, unless otherwise specified on plans. . Color as selected by the City.

E. Drinking Fountain shall be MDF #10145 SM (bottle filler, dual bowl and accessible) and stainless steel surface carrier as distributed by Husbands and Associates (800) 821-9838 and as manufactured by Most Dependable Fountains or accepted equal. Color to be stainless powder coated black or as approved. Include recessed hose bib with locking cover, stainless steel control valves with O-rings, and external stainless steel surface mount carrier. Install with a sand strainer when sand amenities are included in the park design.

F. Park Identification Sign shall be fabricated by Quick Crete Products Corp., Norco, CA, (916) 447-8644, or by Outdoor Creations, Inc., Anderson, CA, (530) 365-6106, or accepted equal.

G. Play Area Age-Appropriate Signage shall contain the following language: "This play area has been designed for the use of children aged *(fill in the appropriate age range)* years of age."

H. Infographic Sign shall be a 24" by 18" digital high pressure laminate graphic panel fabricated or accepted equal. Plaque shall be mounted on a SlimLine single pedestal sign system or accepted equal. Manufacturer for the plaque and sign system (model # 2418 SL-SLP-AL) is KVO Industries (Chris Howell, (707) 573-6868). Installation location shall be verified in the field with the Project Manager. Final graphic panel to be provided by City of Roseville.

I. Scavenger Hunt Sign shall be a 24" by 18" digital high pressure laminate graphic panel fabricated or accepted equal. Plaque shall be mounted on a SlimLine single pedestal sign system or accepted equal. Manufacturer for the plaque and sign system (model # 2418 SL-SLP-AL) is KVO Industries (Chris Howell, (707) 573-6868). Installation location shall be verified in the field with the Project Manager. Final graphic panel to be provided by City of Roseville.

J. Playground rules sign shall be as fabricated by Gopher Sign Company, (651) 698- 5095, or accepted equal.

FOR COUNCIL ONLY NOT FOR CONSTRUCTION

K. Trash Receptacle shall be as shown on the Plans and as specified herein. The trash receptacle shall be as distributed by *Glen Wurster with All About Play at 916.417.8389 MyTCoat*or accepted equal.

L. Other (See Design Guidelines for additional information) shall be as shown on the Plans and as specified herein. The fabric shade structure shall be as distributed by *(Glen Wurster with All About Play at 916.417.8389)*, and as manufactured USA Shade or accepted equal. Color as selected by the City.

M. Other (See Design Guidelines for additional information) shall be as shown on the Plans and as specified herein. The fitness equipment shall be as distributed by *(Glen Wurster with All About Play at 916.417.8389)*, and as manufactured Greenfield Outdoor Systems or accepted equal. Color as selected by the City.

PART 3 - EXECUTION

3.01 Installation

A. Contractor to provide experienced workers or subcontractors to install all site furnishings, including the play equipment and play surfacing described in these Specifications. The workers or subcontractor must demonstrate that at least five (5) similar play structures and five (5) play surface applications similar to that specified for this project have been installed in the last three (3) years.

B. All site furnishing, including play equipment shall be installed per manufacturer's instructions.

C. Engineered wood fiber shall be blown in place to avoid damage to adjacent improvements unless specifically approved by City.

D. Heights of tables and benches shall be as follows, unless otherwise required by ADA; California Title 24 or other code requirements:

Description	Height Above Finish Grade
Table Surface Height	34" Maximum
Knee Space Height	27" Minimum Clear Space
Knee Space Depth	17" Minimum from edge of table to nearest obstruction under table top
Width of Knee Space	30" Minimum clear width beneath table
Bench Surface Height	16" Minimum, 18" Maximum

E. Heights for play equipment, including ramps and transfer decks shall comply with the approved recommendations by the U.S. Architectural and Transportation Barriers Compliance Board: Play Facilities Regulatory Negotiation Committee.

F. For play equipment, locate all footings prior to installation of drain lines. Adjust drain lines to accommodate play structure footings. Provide appropriate fall zones as shown on the Plans and per applicable codes and guidelines.

G. All footings shall be Class A concrete with 3/4" maximum size aggregate, unless otherwise noted. Footings shall be in accordance with Caltrans

FOR COUNCIL ONLY NOT FOR CONSTRUCTION

Standard Specifications, Section 90. Install all footings below finish surface. In paved areas, install paved surface over footing for a clean finished surface as shown on the Plans.

H. Carefully install all furnishings and equipment without disturbance to adjacent finishes. Contractor shall be responsible for the damage and subsequent repairs of damaged finished product.
I. Install park namesake plaque. Installation location shall be verified in the field with the Project Manager.
J. Install age-appropriate stickers on all play structures, per manufacturer's instruction.
K. Install playground rules sign. Installation location shall be verified in the field with the Project Manager.

3.02 Cleaning

A. Thoroughly clean all areas where work has occurred. Remove from the site excess material, debris and rubbish.
B. Take all precautions to protect completed work. Immediately repair or replace all damaged areas due to tire ruts, erosion, compaction failure, etc. Keep all erosion control measures intact.

PART 4 - WARRANTY

4.01 General

A. Contractor shall warranty all site amenities included under this Section.
B. Contractor shall also provide a written warranty covering all materials, equipment and workmanship furnished by him to be free of all defects after installation is accepted, including all defective parts that may have been found.
C. Submit written warranty on company letterhead addressed to the City when providing As-built drawings.
D. Contractor shall submit to the City, upon completion of work, a Certificate of Compliance by a third party certified playground inspector for the installation of the play structure and safety surfacing. Certification shall include testing for compliance of ASTM 1292 (Impact Attenuation of Surfacing Systems under and around Play Equipment). All tests, including re-tests, shall be the responsibility of the Contractor. Submit all test results to the City.
E. Submit maintenance manual for poured-in-place resilient surfacing.
F. Contractor shall submit to the City, upon completion of work, a Certificate of Compliance from the manufacturer of the play structure for the installation of the play structure.
G. Contractor shall submit to the City, upon completion of work, critical fall criterion used to certify all play surfacing material.

FOR COUNCIL ONLY NOT FOR CONSTRUCTION

H. Attach cut sheets of installed items to the warranty.

END OF SECTION

FOR COUNCIL ONLY NOT FOR CONSTRUCTION

SECTION 26 00 00
SITE ELECTRICAL

PART 1 - GENERAL

1.01 General Requirements

A. The requirements set forth in the General Conditions shall be in addition to the standards provided herein.

B. The requirements set forth in the Special Conditions shall be in addition to the standards provided herein.

C. The standards set forth in the City of Roseville Design and Construction Standards, latest edition and requirements outlined by the City of Roseville Electric Department shall be in addition to the standards provided herein.

D. The standards set forth in the latest edition of the California Electrical Code (CEC), incorporating the latest edition of the NEC with City of Roseville amendments shall be in addition to the standards provided herein.

1.02 Description

A. Furnish all labor, materials and equipment for the complete installation of site electrical as shown in the Plans and as specified herein.

B. Submittals shall be required for requested substitutions or plan deviations ONLY. The Contractor shall install all specified electrical fixtures, poles and equipment, unless otherwise accepted and determined as an equivalent.

1.03 References

A. Conform to requirements outlined in the latest editions of the California Electrical Code (CEC), California Administrative Code (Title 24), California Building Code (CBC), California Administrative Code (Title 22) and other applicable codes.

B. Conform to requirements outlined in the latest edition of the Roseville Electric Specifications for Commercial Construction.

1.04 Record Drawings

A. Record drawings are required as a part of this work. At all times, the Contractor shall maintain accurate information of the work in progress. Deviation in layout of conduit or other materials shall be recorded to the satisfaction of the Inspector. Upon completion of the project, as-builts shall be submitted to the City on reproducible plan sheets and shall depict all changes in a neat and legible manner.

FOR COUNCIL ONLY NOT FOR CONSTRUCTION

PART 2 - PRODUCTS

2.01 Service Panels

A. Service panels shall meet the Roseville Electric approved sections of the EUSERC requirements. The list of acceptable panels can be found at https://the.euserc.org/s/Roseville-City-of-Acceptability-Pages.pdf

B. Service panel shall be:
   1. Built to UL508A standards
   2. Metered
   3. Single phase or three phase application
   4. Rated for 120 to 480 volts
   5. Color: Hunter Green

2.02 Electronic Astronomic Time Switch

A. Electronic Astronomic Time Switch shall be DWZ Model series, as manufactured by Tork, or accepted equal.

2.03 Conduit and Fittings

A. For primaries (12,000 volts), conform to Roseville Electric's Specifications for Commercial Construction, latest edition.

B. All other conduit and fittings shall conform to the California Electric Code, latest edition.

2.04 Wires and Cables

A. Conform to the California Electric Code, latest edition.

B. All wires shall be copper only, 90-degree-C THHN/THWN insulation.

2.05 Wire Connections and Devices

A. Conform to the California Electric Code, latest edition.

B. Splices and joints for #10 AWG or smaller wiring shall be twisted together electrically and mechanically strong and insulated with approved type insulated electrical spring connectors, Scotchlok or Ideal. Joints and connections for #8 AWG or larger shall be made with Burndy, T & B, or approved equal, solderless tool applied pressure lugs and connectors. Uninsulated lugs and wire ends shall be insulated with layers of plastic tape equal to insulation of wire and with all irregular surfaces properly padded with "Scotchfil" putty prior to application of tape. Tape shall be equal to Scotch #33, General Electric #AW-1, or approved equal. Feeder splicing is not permitted.

C. Receptacles: 15 & 20 Amp 125 Volt receptacles shall be "Specification" grade, duplex, UL Listed, rated Weatherproof where installed outdoors or in damp or wet locations. Where only one receptacle is connected to a 20 ampere circuit, a 20 ampere receptacle shall be used. Receptacles to be Hubbell 5262 series,

FOR COUNCIL ONLY NOT FOR CONSTRUCTION

5362 series, or equal. Provide an equipment grounding jumper (pigtail) connecting the grounding terminal of the receptacle to the grounded box.

2.06 Outlet Boxes

A. Cast Metal boxes shall be cadmium plated, cast iron alloy by Crouse-Hinds Form 8 condulets, Appleton Form 35 Unilets or accepted equal.
B. Cast Metal Outlet boxes shall be four inch (4") round, galvanized cast iron alloy with threaded hubs and mounting lugs as required. Boxes shall be furnished with cast cover plates of the same material as the box and neoprene gaskets by Crouse-Hinds VXF series, Appleton JBX series or accepted equal.

2.07 Pull and Junction Boxes

A. Per City of Roseville Electric Department's Specifications for Commercial Construction, latest edition.

2.08 Parts Identification

A. Consistent with the City of Roseville Electric Department's Specifications for Commercial Construction, latest edition.

2.09 Electrical Support Equipment

A. Concrete Fasteners shall be Philips "Red-Head" or accepted equal. Powder driven concrete pin fasteners, low velocity type shall be Remington, Ramset or accepted equal.
B. Conduit Straps shall be hot dipped galvanized, cast malleable iron, one hole type strap with cast clamp-backs and spacers (as required) by O-Z/Gedney No. 15-50G strap and #14G spacer, Efcor No. 231 strap and No.131 spacer or accepted equal.
C. Concrete Inserts shall be pressed galvanized steel, spot insert with oval slot capable of accepting support nuts of ¼ inch to ½ inch diameter thread by Unistrut No. M2506 series, Globestrut CSI series or accepted equal.
D. Construction Channel shall be 1-1/2 inch by 1-1/2 inch 12 gauge galvanized steel channel with 17/32 inch diameter bolt holes, 1-1/2 inch on center, in the base of the channel by Kindorf 905 series, Unistrut P-1000-HS or accepted equal.
E. Cable Ties and Clamps shall be one piece, nylon, reusable type lashing tiesby Thomas and Betts Co "Ty-Raps", Panduit "Pan-Ty" or accepted equal.
F. General Fasteners shall be wood screws for fastening to work; machine screws for fastening to steel; toggle bolts for fastening to gypsum board or plaster walls; expansion anchors for attachments to pre-poured concrete.
G. GFI Outlet Cover shall be metal, lockable, and flush with the surface it is installed in. Cover must conform to the California Electric Code, latest edition.

FOR COUNCIL ONLY NOT FOR CONSTRUCTION

2.10 Fixtures and Poles

A. Parking Lot lights shall be:
B. Pathway/Security lights shall be:
   1. LED: Hadco: RL54 B B N N 1 A W N N N A 2 N N N N SP1
   2. Pod: die-cast aluminum housing with tool-less access
   3. Globe: clear prismatic injection molded U.V. stabilized acrylic
   4. Symmetric photometric distribution
   5. Rated 120 volts
C. Poles shall be:
   1. Whatley: TR34 16 DE BLK TXT 30-30 or accepted equal
   2. Fiberglass, direct burial
   3. Textured round, tapered
   4. 16’ mounting height
   5. Include –RC receptacle on select poles only, as shown on plans

2.11 Tracer Wire

A. Insulated solid copper wire, minimum #12 gauge.

PART 3 - EXECUTION

3.01 Installation

A. Install (luminaire and poles) in accordance to manufacturer’s instructions.
B. Ensure proper handling and installation of fixtures including hardware necessary for a complete installation. Fixtures (luminaire and poles) shall be clean, plumb and level.
C. All lamps shall be new and in operating condition. New lamps shall have less than 100 hours of operation on-site.
D. All splices in exterior fixtures or fixture outlet boxes shall be made watertight, using specified epoxy resin splicing kits.
E. Operate the entire system, once complete, in the presence of the Inspector. Immediately correct any improper connections or other items.
F. Install concrete collars around light poles. Concrete collars shall be per the Parks Construction Standards, latest edition.
G. Install tracer wire on top of conduit for all up-lighting and sports field lighting.

3.02 Clean Up

A. At all times, maintain a safe and clean work site, free of debris and rubbish.
B. All electrical parts shall be clean of conductive and deleterious materials.
C. All enclosures shall be free of dirt and debris.
D. Clean all finishes and touch up damaged areas prior to pre-final inspection.

FOR COUNCIL ONLY NOT FOR CONSTRUCTION

3.03 Excavation & Backfill

A. Refer to Section 33 00 00 Utilities.

3.04 Equipment Pads

A. Concrete reinforced pads for mounting of equipment (i.e. switchboard, transformers, freestanding panels, etc.) shall be minimum 3000psi, 6" thick with #4 rebar at 12" on center each way. Rebar shall be centered in pad. Pad shall extend 2" beyond equipment and 1.5" above surrounding area. Backfill and compact to 95% maximum dry density at optimum moisture content in layers not to exceed 6" when compacted.

3.05 Grounding

A. Grounding and ground bonding of the electrical installation shall be in accordance with CEC Article 250, and any applicable codes. Ground fittings shall be approved manufactured type, installed and connected to conform with Code requirements.

B. Neutral conductors and noncurrent-carrying parts of equipment at each installation shall be grounded in accordance with applicable code. Ground conductor shall be copper having a current capacity sized in accordance with CEC.

C. All equipment cases, motor frames, etc., shall be completely grounded to satisfy requirements of CEC. Install bond wire in flexible conduit. Install copper bond wire, sized in accordance with CEC, in all nonmetallic raceways and bond to all metallic parts using approved fittings.

D. Service ground conductor shall be connected to a "Ufer" encased ground and bonded to the metallic cold water pipe system and to the metallic natural gas line. 5/8” x 10 ft copper clad ground rods may be used in lieu of the Ufer ground where no footing is available.

E. All connections shall be made with solderless connectors or molded fusion-welding process.

F. Equipment grounding conductors shall be insulated with a continuous green outer finish along its entire length. Conductors size #4 AWG and larger may be identified (with green electrical tape applied half-lapped) at each end and at every point where the conductor is accessible. Tape shall be applied from its point of entry to point of exit or termination.

G. Insulated grounded (neutral) conductors shall be identified with a continuous white outer finish along its entire length. Neutral conductors #4 AWG or larger can be identified by a distinctive white marking (applied half-lapped with white electrical tape) for the last 12 inches at each end.

FOR COUNCIL ONLY NOT FOR CONSTRUCTION

3.06 Field Testing

A. Perform Insulation Resistance (IR) "Megger" Testing per NETA Standards. Submit test results. Provide testing for:
   1. All feeders 100 Amps and higher.
   2. Branch circuits 100 Amps and higher.

B. Each ground rod shall be tested. A ground rod which does not have a resistance to ground of 25 ohms or less shall be augmented by one additional ground rod at no less than 8 feet from each other.

3.07 Consultant to complete.

END OF SECTION

FOR COUNCIL ONLY NOT FOR CONSTRUCTION

SECTION 31 10 00
CLEARING AND GRUBBING

PART 1 - GENERAL

1.01 General Requirements

A. The requirements set forth in the General Conditions shall be in addition to the standards provided herein.

B. The requirements set forth in the Supplemental Conditions shall be in addition to the standards provided herein.

1.02 Description

A. Preserve and protect existing site amenities to remain, including, but not limited to, trees, shrubs, underground utilities and other improvements as shown on the Plans. Protection of work shall include affected improvements on adjoining properties.

B. Scope of work includes: site preparation, removal of debris, staging of equipment and materials and securing the site for construction.

1.03 Related Work

A. Section 31 20 00: Earthwork

B. Section 01 57 23: Storm Water Pollution Control

1.04 Protection/Replacement

A. Prior to demolition, erect protective fencing a minimum of one foot (1') beyond the canopy of all trees to remain. The radius of the canopy shall be measured from the longest branch furthest from the trunk. Refer to the environmental document for additional requirements for protective fencing on other existing natural features. For work within or near protected trees, a tree permit may be required.

B. If public use is to be maintained on unaffected portions of the project site, the Contractor shall be responsible for directing pedestrian and vehicular traffic safely around the construction zone. Utilization of temporary fencing, barricades, signage, etc. shall be the responsibility of the Contractor. Safe detours shall be available to the general public at all times during the course of construction.

C. Protection of existing site improvements shown to remain, including, but not limited to, fencing, signs, benches, picnic tables, play structures, shade structures, drinking fountains, concrete paving, concrete wall and curbs,

FOR COUNCIL ONLY NOT FOR CONSTRUCTION

decomposed granite paving, asphalt concrete paving, recreational site improvements, etc. are to be protected and preserved.

D. The Contractor shall be responsible for any damage to and maintenance of all existing street improvements, drainage facilities and irrigation systems and to re-establish these improvements to their original condition as soon as possible after completion of the work in the area, to the complete satisfaction of the Project Manager and Inspector. Realignments or modifications to the existing facilities as shown on the plans are accepted.
E. Survey monuments and markers either shown on the Plans or encountered during the course of construction shall be protected and preserved. The Contractor shall notify the Inspector upon discovery of an unmarked monument, at which time, arrangements for the relocation or adjustment of the monument will be determined. All costs associated with the relocation or adjustment of these monuments shall be the Contractor's responsibility.
F. Burning or burying removed material on-site is prohibited.
G. Where the removal of specific material creates an open hole, pit, trench or other depression, the Contractor shall immediately backfill and compact the areas consistent with requirements outlined in Section 31 20 00 of these Specifications.
H. All items identified in the Plans to remain or identified in the field to remain, removed in error by the Contractor, shall be repaired or replaced to match in equal or better construction, at no cost to the City. The quality of the repair or replacement shall be measured as that existing at contract award.

PART 2 - PRODUCTS

Intentionally left blank.

PART 3 - EXECUTION

3.01 Pre-Construction Site Review

A. Contractor shall review existing site conditions with the Inspector prior to start of construction and document any conditions which adversely affect the satisfactory execution of the work and final acceptance of the project.
B. Commencement of work constitutes acceptance of existing conditions. The Contractor shall, at his expense, be responsible for correcting all unsatisfactory and defective work.

3.02 Clearing

A. Completely remove trees, shrubs, stumps, vines, rubbish/debris, undergrowth, deadwood, structures, and other elements identified to be removed and/or which interfere with the construction as shown on the Plans and as specified.

FOR COUNCIL ONLY NOT FOR CONSTRUCTION

B. Obtain verification from the Project Manager for non-identified items scheduled to be removed prior to actual removal.

3.03 Grubbing

A. Remove all stumps, roots, grasses and weeds in its entirety. Apply systemic weed killer. Confirm weed kill prior to removal.

B. For projects with native soils, once surface material is removed, the Contractor shall stockpile the top twelve inches (12”) of topsoil for use during the final grading phase of work. This soil shall be free of rocks, debris, roots and other undesirable material.

3.04 Utilities

A. Contact USA North 811 at (800) 642-2444, or submit an online ticket at USANorth811.org, prior to commencement of any demolition or excavation work. Provide a minimum of 48 hours’ notice. Verify all utilities entering into and their locations within the project site.

B. Where utilities lie within the project site, but are not a part of the project, the Contractor shall cooperate with the agency or utility company having jurisdiction to maintain its use and the integrity of the structure.

C. Where utilities enter into the project site and taps, connections to or extensions of the utility are identified in the Plans, the Contractor shall coordinate all work with the agency or utility company having jurisdiction to minimize or eliminate disruption of use by the adjacent properties.

D. Verify that all utilities, shown to be removed on the Plans, are inactive and turned off prior to disconnection and/or re-routing, prior to demolition.

3.05 Debris Removal

A. All materials removed as a part of this contract shall become the property of the Contractor and shall be legally disposed of off-site, unless otherwise noted on the Plans.

B. Where a portion of a concrete slab, curb or wall and asphalt concrete paving or curb is to be removed, the concrete shall be cut with a concrete saw at a 90 degree angle so that the edge of the remaining concrete shall form a neat, straight line. Conform to the City of Roseville Design and Construction Standards, latest edition.

FOR COUNCIL ONLY NOT FOR CONSTRUCTION

END OF SECTION

FOR COUNCIL ONLY NOT FOR CONSTRUCTION

SECTION 31 20 00
EARTHWORK

PART 1 - GENERAL

1.01 General Requirements

A. The requirements set forth in the General Conditions shall be in addition to the standards provided herein.
B. The requirements set forth in the Supplemental Conditions shall be in addition to the standards provided herein.
C. The standards set forth in the Caltrans Standard Specifications, latest edition, shall be in addition to the standards provided herein.
D. The requirements set forth by CAL OSHA shall be in addition to the standards provided herein.

1.02 Description

A. Provide all labor, operations and materials necessary for earthwork, including, but not limited to, staking and surveying, grading; excavating; installation of facilities necessary to perform excavation and subsequent removal of such facilities upon completion of work; subgrade preparation; backfilling; and other incidental items necessary for a complete project.
B. This project (is a balanced cut (requires export of material). The (export) of material shall be a part of the Contractor's bid price.
C. The intent of the grading plan is to provide positive drainage and to maintain slopes on walkways as required by the Americans with Disabilities Act and California Title 24 throughout the project site. The Project Manager shall be notified immediately of any discrepancies between the Plans and actual field conditions and/or conflicts between the design and code requirements.

1.03 Related Work

A. Section 31 10 00: Clearing and Grubbing
B. Section 33 00 00: Utilities
C. Section 32 84 00: Irrigation System
D. Section 32 90 00: Planting
E. Section 26 00 00: Site Electrical
F. Section 01 57 23 Storm Water Pollution Control

1.04 Quality Assurance

A. All work shall conform to local codes and regulations, including standards set forth in the Standard Specifications of the State of California, Business and

FOR COUNCIL ONLY NOT FOR CONSTRUCTION

Transportation Agency, Department of Transportation (Caltrans), Chapter 70 of the Uniform Building Code and ASTM.

B. Relative compaction shall be the in-place dry density of soil denoted as a percentage of the maximum dry density of the same material. This shall be as determined by ASTM 1557. The optimum moisture is measured by the water content which corresponds to the maximum dry density.

C. Upon discovery of unforeseen subsurface site conditions, the Contractor shall notify the Inspector immediately.

D. Upon discovery of hazardous materials, cease all activity and immediately contact the Fire Department.

1.05 Protection

A. Provide and install all supports, shoring, bracing, underpinning, sheet piling and other methods for the sides of excavations necessary for ensuring safe working conditions for the workmen and to protect adjacent improvements to remain.

B. Provide any and all protection measures necessary to ensure the protection of the workmen, the general public, including children and the project site. These protection requirements remain the Contractor's sole responsibility throughout the duration of the project, including non-working hours.

C. Do not obstruct vehicular, bicycle or pedestrian thoroughfares, unless previously accepted by the City. Provide safe and adequate detours around the construction as required by City and State regulations.

D. Trenches shall be covered at all times when work directly associated with the trenches is not occurring, including non-work hours.

E. During the course of construction, the Contractor shall ensure surface drainage does not create a nuisance onto adjacent properties.

1.06 Erosion Control Measures

A. Construction sites shall have required erosion and sediment control measures in place as required by the SWPPP. If construction is in progress, the Contractor shall ensure the construction site is prepared prior to the onset of any storm. At a minimum, erosion control measures shall include:

1. Broadcast seed
2. Drainage area protection
3. Dust/mud control
4. Drain inlet filters
5. Silt fence and straw wattles
6. Slope protection
7. Straw bales
8. Silt controlling devices

FOR COUNCIL ONLY NOT FOR CONSTRUCTION

PART 2 - PRODUCTS

2.01 Base Rock

A. Class 2 aggregate base per Caltrans Standard Specifications, latest edition.

2.02 Drain Rock

A. Drain rock shall be Class 2 permeable, washed, unbroken stone or gravel. Material gradation shall conform to the following:

Sieve Size	Percent Passing
1 inch	100
No. 4	20-50
No. 50	0-10
No. 200	0-5

2.03 Pea Gravel

A. Pea gravel shall be natural stone, free of clay, shale or organic matter, and shall conform to the following:

Sieve Size	Percent Passing
3/8 inch	100
No. 4	47
No. 8	2
No. 16	1

2.04 Fill

A. Structural Fill shall conform to Caltrans Standard Specifications or the accepted site-specific geotechnical report generated for the project.

B. Fill for non-structural areas shall conform to the following standards:
   1. Plasticity: ASTM D4318-84
   2. Expansion Index: No greater than twenty (20)
   3. Testing: UBC 29-9 and ASTM D422-72
   4. Particle Size: No greater than one inch (1”)

2.05 Topsoil

A. The top eight to ten inches (8” – 10”) of native soil containing more than three percent (3%) organic material. Topsoil shall be free of rocks no larger than one inch (1”) in diameter, free from subsoil, roots, heavy or stiff clay, course sand, destructive seeds, noxious chemicals, brush, debris, litter and other undesirable materials.

B. For any import soil to be used in turf/planting areas, submit a soils analysis with soil amendment recommendations (for plant growth) for review and acceptance prior to placement on-site. Soils test information shall be as outlined in Section 32 90 00: Planting – 1.06.

FOR COUNCIL ONLY NOT FOR CONSTRUCTION

2.06 Soil Sterilant

A. Sterilizer shall be standard, quick-acting, short-lived and non-selective weed and grass killer, commonly used under roadway/transportation projects. Application of the sterilant shall pose no short or long term health threats to the installer or the general public. Submit analysis for approval prior to applying.

2.07 Sand

A. Granular, fine, free of organic matter, mica, loam or clay material.

PART 3 - EXECUTION

3.01 Construction Staking

A. The layout of all work shall be performed by a California State licensed land surveyor provided by the Contractor.
B. Notify the Inspector immediately of any discrepancies between actual field conditions and the Plans. Minor field adjustments may be necessary in order to fulfill the intent of the Plans.
C. Non-notification of discrepancies between actual field conditions and the Plans by the Contractor, in writing, shall indicate his acceptance of such field conditions. Adjustments/modifications to the construction to accommodate the inconsistencies (without notification) shall be at no additional cost to the City.

3.02 Excavation

A. All excavations shall be as noted on the Plans. Excavations shall include accommodation of base material.
B. Do not over-excavate. Excavations shall provide appropriate space to install shoring, bracing, formwork, etc., as needed to ensure the safe and proper construction of the work.
C. Take every precaution to prevent water from entering, softening, and undercutting excavated areas, including, pits, footings, trenches, etc.
D. Notify the Inspector immediately upon discovery of unsatisfactory soils materials or unforeseen site conditions. Excavation shall include the complete removal of the unsatisfactory material and its legal disposal thereof.

3.03 Site Grading

A. A grading permit is required to be obtained by the Contractor prior to commencing any earthwork.
B. Grading shall include adjacent transition areas, new elevations/contours as shown on the Plans. All subgrade areas shall be graded parallel to the finish grades and contours and shall be uniform in slope. Transition areas shall provide a smooth connection between new and existing grades and shall not create additional drainage or ponding onto adjoining properties.

FOR COUNCIL ONLY NOT FOR CONSTRUCTION

C. Surface grades shall provide for positive drainage away from structures and footings, and shall be uniformly smooth throughout.
D. Rough grading shall:
   1. Be graded to a tolerance of 0.10 feet, plus or minus for planted and turf areas.
   2. Be graded with a tolerance less than .04' from specified grade and cross section for subgrade in which pavement, curbs and other structural elements are to be placed immediately above.
   3. Provide a subgrade surface free of exposed rocks, stones and boulders.
   4. Provide a subgrade surface free of depressions, pits, etc., with proper backfill and compaction. See paragraph 3.04 below.

3.04 Placement of Fill Material

A. Prior to placement of fill material, the Contractor shall:
   1. Obtain approval of the subgrade surface from the Inspector.
   2. Scarify, dry and compact soft and/or wet areas.
   3. Remove and replace unsuitable subgrade material to the satisfaction of the Inspector.
   4. Take all necessary corrective action.
B. Do not use topsoil as fill or backfill material, unless otherwise accepted in writing.
C. Fill shall be placed in the following manner:
   1. Accepted engineered fill material for structural slabs and areas to be paved shall be placed in six-inch (6") loose thickness, uniform layers over the entire area.
   2. Fill material in planted areas shall be placed in twenty-four inch (24") maximum loose thickness throughout the areas to receive fill.
D. Aerate or water each lift to obtain the required compaction rate indicated on the Plans. Thoroughly mix material to ensure proper moisture content for compaction. Repeat the operations until grades, as shown on the Plans, are obtained. Jetting of trenches shall be reviewed and accepted by the Inspector prior to performance of work.
E. Do not place fill when the subgrade is frozen, muddy or wet. Allow conditions to thaw and dry out before resuming operations.
F. Use hand tampers or vibrating compactors around foundations walls, retaining walls and other structural elements. Do not use large equipment in these areas and do not begin compaction operations until the bearing surfaces have reached its design strength.
G. Fill around existing trees to remain shall not exceed twelve inches (12").
   1. Minor fill (6" or less) shall utilize topsoil and shall be placed by hand. Do not cover crown of trunk. Feather grades to the extent possible.

FOR COUNCIL ONLY NOT FOR CONSTRUCTION

2. Fills between 6” and 12” shall utilize 3/4” pea gravel on grade, placed up to three inches (3”) below finish grade. Apply topsoil, by hand, to meet finish grade elevations. Feather grades to the extent possible.

H. Construct mounds from on-site material. The core of the mound (1’ below finish elevations) shall be compacted to 90%. The top twelve inches (12”) shall be compacted to 85%. Place topsoil in the top twelve inches (12”).

I. Place topsoil in all turf and planting areas a minimum of twelve (12) inches deep. See Section 31 10 00, 3.03-B: Clearing and Grubbing.

3.05 Trenching, Backfilling and Compacting

A. For trenches greater than five feet (5’) in depth, submit an OSHA permit related to the work.

B. All trenches shall be straight, true and cut vertical at 90 degrees to the surface plane.

C. For trenches through existing paved surfaces, use a concrete saw or other tool to achieve straight, clean lines. Replace paved surface to the same or better condition as existing prior to cut.

D. Do not over-excavate. Maintain bearing surfaces true, level and undisturbed to the extent possible.

E. Trenches shall be kept dry and frost-free. Do not allow standing water to collect.

F. Do not allow trenches to remain exposed at any time when work directly related is not occurring. Cover all trenches during non-work hours.

G. Bedding for all trenches to receive pipes shall be as follows:

1. Bedding material shall be consistent with the City of Roseville Design and Construction Standards, latest edition.
2. Pipe shall lie completely on bedding. Pipe fittings or joints shall not bear weight.
3. Bedding shall be uniform throughout the length of pipe.

H. Initial backfill for storm drains, sewer lines and electrical conduit shall conform to the applicable City standard set forth by the Department having jurisdiction.

I. Backfill beyond the initial operations shall be native soil, placed in twelve-inch (12”) lifts. Compaction for trenched areas shall be 95% for parking lot, driveway and roadway areas; 90% for hardscape (i.e. walkways, picnic pads basketball and tennis courts); and 85% in areas to be planted. Place topsoil over trenches in planted areas. Upon completion, all trenches shall be filled flush with adjacent finish grades.

J. Compaction tests shall be required for trenched areas, hardscape areas and areas where fill over two feet in depth will be placed. The Inspector shall determine the number of tests and the locations. Re-tests shall be the Contractor’s responsibility.

FOR COUNCIL ONLY NOT FOR CONSTRUCTION

K. Potholing shall be required in areas where existing utilities are indicated. Hand digging may be required.

3.06 Soil Sterilant

A. Soil sterilant shall be applied to areas where paving is to be installed. The worker applying the sterilant shall take every precaution to avoid overspray of sterilant onto areas to be planted. The sterilant shall be placed no further than six inches (6”) beyond the edge of pavement.
B. Soil sterilant shall not be applied in inclement weather and windy days.

3.07 Drainage Areas

A. All bare areas, regardless of slope, within 50 feet of natural drainages shall be covered with straw and pressed in place.
B. No grading or trenching, except as required for erosion or sediment control, shall occur within 35 feet from the centerline of perennial and intermittent drainage swales between October 5 and April 1 unless approved by the Engineering Division, as well as any other governmental agency which may have additional jurisdiction and/or requirements.

3.08 Dust/Mud Control

A. Adjacent Streets: Adjacent street frontages shall be swept at least once a day to remove silt and other dirt which is evident from construction activities.
B. Construction Vehicles: The Contractor is responsible for cleaning construction vehicles leaving the site on a daily basis to prevent dust, silt, mud and dirt from being released or tracked offsite. Adjacent streets shall be swept clean daily.
C. Grading Spoils: Dry stockpiles of soil shall be watered to prevent the generation of airborne dust. Trucks transporting dry soil shall be covered with tarpaulins.
D. Water: Water shall be sprayed on all exposed earth surfaces during clearing, grading, earth moving and other site preparation activities. The exposed earth shall be watered throughout the day to minimize dust. The Contractor shall obtain a hydrant permit from the Environmental Utilities Department.
E. Wind Allowances: Grading activities shall be restricted or halted when winds exceed 15 miles per hour as deemed necessary by the Public Works Inspector.

FOR COUNCIL ONLY NOT FOR CONSTRUCTION

END OF SECTION

FOR COUNCIL ONLY NOT FOR CONSTRUCTION

FOR COUNCIL ONLY NOT FOR CONSTRUCTION

FOR COUNCIL ONLY NOT FOR CONSTRUCTION

SECTION 32 15 40
DECOMPOSED GRANITE PAVING

PART 1 - GENERAL

1.01 General Requirements

A. The requirements set forth in the General Conditions shall be in addition to the standards provided herein.

B. The requirements set forth in the Supplemental Conditions shall be in addition to the standards provided herein.

C. The standards set forth in the City of Roseville Design and Construction Standards and the City of Roseville Parks Construction Standards, latest editions, shall be in addition to the standards provided herein.

1.02 Description

A. Furnish all labor, materials and equipment for the complete installation of decomposed granite paving, including redwood headers as shown in the Plans and as specified herein.

1.03 References

A. Caltrans Standard Specifications, latest edition.

1.04 Submittals

A. Submittals for specified items are not required; however, submittals are required for any proposed substitutions or deviations from the Plans or Specifications. Additionally, submittals are required for the specific items listed below. The Contractor shall submit a materials summary sheet indicating which items will be installed as specified and which items are proposed for substitutions. The Contractor shall submit proof of order within ten (10) working days of the Notice to Proceed, indicating all specified materials have been ordered, noting “as specified” or “substitution proposed”. Submittals are required on the following items:

1. Decomposed granite material and binding material: provide a sample “brick” for review and approval.

PART 2 - PRODUCTS

2.01 Crushed Quarry Rock

A. Crushed rock, graded between #4 and #200. Rock shall be high quality and well-graded.

FOR COUNCIL ONLY NOT FOR CONSTRUCTION

B. Hastie's Capitol Sand and Gravel, Roseville, CA (916) 989-4600 or accepted equal.

2.02 Header

A. 1"x6"or 2"x6" Redwood header board.

2.03 Binding Material

A. PolyPavement, Los Angeles, CA (323) 954-2240 or accepted equal.

PART 3 - EXECUTION

3.01 Preparation

A. Upon completion of grading operations, compact the subgrade at the required elevation to a relative compaction density of 95%, unless otherwise noted on the Plans.
B. Completely install redwood header as shown in the City of Roseville Parks Construction Standards.
C. No material shall be placed in muddy conditions, nor shall any material be placed during or immediately after inclement weather, i.e. rain storms, etc.

3.02 Installation

A. Provide a 10' by specified width test sample, to be approved prior to installation. This sample shall be the basis of overall approval.
B. Thoroughly combine binder per manufacturer recommendations.
C. Spread crushed granite fine/binder material in two (2) one and one half inch (1-1/2") lifts (thickness after compaction).
D. Wet and roll each lift to form a uniform, smooth surface with a cross slope of 2%. Compact each lift to a 95% relative compaction density.
E. Upon completion of the final lift, fill any depressions, holes or divots and re- roll using the above process.
F. Provide a Certificate of Compliance verifying the binder/stabilizer has been mixed per manufacturer's recommendations.

3.03 Clean Up and Protection

A. Thoroughly clean all areas where work has occurred. Remove from site excess material, debris and rubbish.
B. Take all precautions to protect completed work. Immediately repair or replace all damaged areas due to tire ruts, erosion, compaction failure, etc.

END OF SECTION

FOR COUNCIL ONLY NOT FOR CONSTRUCTION

FOR COUNCIL ONLY NOT FOR CONSTRUCTION

FOR COUNCIL ONLY NOT FOR CONSTRUCTION

FOR COUNCIL ONLY NOT FOR CONSTRUCTION

FOR COUNCIL ONLY NOT FOR CONSTRUCTION

SECTION 32 84 00
IRRIGATION SYSTEM

PART 1 - GENERAL

1.01 General Requirements

A. The requirements set forth in the General Conditions shall be in addition to the standards provided herein.
B. The requirements set forth in the Supplemental Conditions shall be in addition to the standards provided herein.

1.02 Description

A. Furnish all labor, materials and equipment for the complete installation of an automated irrigation system, including all necessary appurtenances for proper operation, noted or implied, as shown on the Plans and as specified herein.
B. Water usage, meter costs, connection fees, testing and other associated utility costs are considered direct costs and is the responsibility of the Contractor until the project is accepted.
C. Installation of the water meter shall be by the City.

1.03 Related Work

A. Section 32 90 00: Planting
B. Section 26 00 00: Site Electrical

1.04 Quality Assurance

A. All work shall comply with local and state laws, codes, regulations and requirements which govern any portion or all of the work contained in this Section. These include, but are not limited to, the latest editions of:
   1. City of Roseville Park Construction Standards,
   2. City of Roseville Design and Construction Standards,
   3. City of Roseville Electric Department Standard Specifications,
   4. Local, state and federal electrical codes, manuals and guidelines, and
   5. Local, state and federal plumbing codes, manuals and guidelines.

1.05 Submittals

A. Submittals for specified items are not required for Parks or Streetscape projects, unless specifically listed below. However, submittals are required for any proposed substitutions or deviations from the parks Plans or Specifications. For Streetscapes, no substitutions will be accepted. The Contractor shall submit a materials summary sheet indicating which items will be installed as specified

FOR COUNCIL ONLY NOT FOR CONSTRUCTION

and which items are proposed for substitutions. The Contractor shall submit proof of order within ten (10) working days of the Notice to Proceed, indicating all specified materials have been ordered, noting “as specified” or “substitution proposed”. Submittals are required on the following items:

1. Controller, Flow Sensor(s), and Master Valve(s).
2. Filter (Recycled water)

1.06 Explanation of Drawings

A. The drawings are diagrammatic and do not reflect all offsets, fittings and other miscellaneous items required for a complete and operable irrigation system. It shall be the Contractor’s responsibility to investigate all existing site conditions, become thoroughly familiar with the site, and provide all labor, materials and equipment required for the installation of the irrigation system.

B. Avoid conflicts between other trades and the installation of the irrigation system. Minor adjustments to avoid such conflicts shall be made in the field. Major discrepancies between actual field conditions and the Plans shall be brought to the attention of the Project Manager. The lack of notification shall indicate the Contractor assumes full responsibility for any revision deemed necessary to ensure proper installation.

1.07 Product Delivery, Handling and Storage

A. All materials shall be delivered bearing manufacturer’s label with size, type and model number (if applicable) clearly marked.

B. All pipe shall be delivered in a vehicle which allows the material to lie flat without concentrated weight or stress at any point.

C. Unload all materials with care so as to avoid damage. Store materials in a covered area and do not expose PVC pipe to extreme sun or heat. Store pipe lying flat.

D. Do not install any material that has been damaged. Replace all material found to be damaged.

1.08 Record Drawings

A. The Contractor shall keep an accurate record of the as-built conditions of the irrigation system. These records shall be updated daily and kept at the construction site. At any time, the Inspector may examine the conditions of the “as-builts” to ensure compliance of the above.

B. Dimensions shall be recorded from two (2) permanent points of reference.

C. The City may at its discretion withhold progress payments to the Contractor if the as-built records are not updated to the satisfaction of the City.

FOR COUNCIL ONLY NOT FOR CONSTRUCTION

PART 2 - PRODUCTS

2.01 General

A. All materials specified shall be new, bearing the brand name, type, serial numbers and model number as shown on the Plans and as specified herein, unless otherwise accepted in writing.

2.02 Backfill Material

A. Backfill shall be clean, screened, on-site material, free from organic material, large clods of earth and/or rock larger than one (1) inch in diameter, trash, debris, rubbish, tree trunks, broken concrete or asphalt and other unacceptable material.

B. Material larger than one (1) inch shall be removed from site and legally disposed. All removal shall be the responsibility of the Contractor.

2.03 Meter

A. Meter shall be as shown on the Plans and as required by the City of Roseville Environmental Utilities Department.

2.04 Backflow Prevention Device

A. Backflow Prevention Device shall be as shown on the Plans.

B. Cover shall be insulated, freeze-proof, removable and lockable, manufacturer and model per the City of Roseville Design and Construction Standards or accepted equal.

2.05 Filter (Recycled Water Only)

A. Amiad Filtration Systems, filter with scanaway semi-automatic assembly and 130 micron filter screen

1. For 2”, Plastic Super-T Semi-Automatic Filter.
2. For 3” and above, Steel In-line Semi-Automatic Filter.
3. Include Scanaway 130 micron filter element.
4. Match line size of recycled water meter, down to 2” minimum.
5. Include lockable protective frost cover blanket.

2.06 Flow Sensor and Master Valve

A. Calsense Controllers:

1. Flow sensor shall be a Calsense Ultrasonic Flow Meter (FM-2U), or accepted equal. Flow sensor shall be accurate to +/- 2% of full scale. Flow sensor body shall be constructed of Schedule 80 PVC for sizes up to 4”, and saddle taps for sizes 6” and above.
2. Master valve(s) shall be Superior, 3300 series, normally open, electric globe valve, constructed of brass with dirty water protection and No Minimum Flow

FOR COUNCIL ONLY NOT FOR CONSTRUCTION

feature. For recycled water systems, include -RW Recycled Water designation with purple handle for identification.

3. Flow meters to be constructed consistent with the Calsense specifications.
4. Valve boxes for master valve and flow sensor shall be 18” (jumbo) green rectangular rigid plastic valve boxes with lockable lids and extensions by Carson Industries, LLC or accepted equal. Valve box lid shall be colored green in potable water system applications and purple for recycled water system applications.

2.07 Pipe

A. PVC Pressurized Mainline

1. For lines three inch (3”) or larger: polyvinyl chloride (PVC) 1120-1220, SDR 21, Class 200 rubber gasketed pipe, and NSF accepted per Standard No. 14, Type I, Grade I. Conform to:

Material	ASTM
Pipe	D1784, D2241
Rubber Gasket	F477

2. For lines two and one half inches (2-1/2”) or smaller: Schedule 40 polyvinyl chloride (PVC) 1120-1220, and NSF accepted per Standard No. 14, Type I, Grade I. Conform to:

Material	ASTM
Pipe	D1784, D1785

B. PVC Non-Pressurized Lateral Lines

1. Schedule 40 polyvinyl chloride (PVC) 1120-1220, SDR 21.0, NSF accepted per Standard No. 14, Type 1, Grade II.

C. Recycled Water

1. Pipes shall meet the standards outlined in Sections 2.08, A and B above, unless otherwise noted in the City of Roseville Design and Construction Standards for recycled water, latest edition.
2. All pipes containing recycled water shall be purple, NSF accepted and conform to the City of Roseville Design and Construction Standards, latest edition.

2.08 Fittings and Nipples

A. Fittings for Mainline Pipe:

1. For all control valves on mainlines three inches (3”) and larger, use painted, ductile iron saddle taps with double stainless steel straps and nuts. Model #202 by Romac Industries, Inc. or accepted equal.
2. For all other connections on mainlines three inches (3”) and larger mainline pipe, use glued schedule 80 fittings.

FOR COUNCIL ONLY NOT FOR CONSTRUCTION

3. For all control valves on mainlines two and one half inches (2-1/2”) or smaller, use glued schedule 80 fittings.
4. For all other connections on mainlines two and one half inches (2-1/2”) or smaller, use glued schedule 40 fittings.

B. Fittings for Solvent Weld Pipe- Laterals:
1. Schedule 40 polyvinyl chloride (PVC), standard weight, conforming to ASTM D2466-73.
2. Weld-on #P-70 primer and Weld-on #711 gray glue or accepted equal.
3. Teflon tape for all threaded PVC fittings.

C. Plastic Nipples shall be Schedule 80, Type 1, Grade 1, polyvinyl chloride (PVC), threaded at both ends, and conforming to ASTM D1784 -85. Nipples shall be uniformly gray.

D. Fittings for Recycled Pipe:
1. Fittings shall meet the standards outlined in Sections 2.09, A, B and C above, unless otherwise noted in the City of Roseville Design and Construction Standards for recycled water, latest edition.

2.09 Swing Joints

A. Swings joints shall be as shown in the City Parks Construction Standard detail. Schedule 40 threaded PVC triple swing joints or an accepted equal.

2.10 Electric Remote Control Valve

A. Sizes as shown on the Plans. All valves shall be Rainbird PEB series or accepted equal and shall contain the following:
1. a globe-type electric remote control, normally closed diaphragm type with slow opening and closing action,
2. encapsulated solenoid type actuation,
3. a minimum rating of twenty-four (24) volts,
4. sixty (60) cycle,
5. two to five (2-5) watts,
6. a manual flow adjustment with shut-off provisions,
7. provisions for an external “bleed” of the diaphragm chamber for manual operation.
8. a ball valve on the inlet.
9. Schedule 80 PVC threaded fittings from main line to valve.

B. Valve boxes shall be rectangular, rigid plastic valve boxes with lockable lids and extensions by Carson Industries, LLC or accepted equal. Valve box shall be sized appropriately to house entire valve assembly with space to accommodate maintenance access. Valves for drip zones require Jumbo size boxes.

FOR COUNCIL ONLY NOT FOR CONSTRUCTION

1. Boxes shall be colored green in potable applications, and purple for recycled water applications.
2. Valve boxes used on recycled water systems shall be permanently colored purple through the manufacturer. Boxes painted purple will be rejected.
3. Label lids using heat branded identification, T:Turf, S:Shrubs, B:Bubblers

C. Controller station identification number shall be standard yellow tags with permanent numbers by Christy or accepted equal.

2.11 Root Watering System

A. Provide pre-manufactured root watering system.
1. Pressure compensating bubbler. See irrigation sheets for flow rates.
2. Check valve where applicable to prevent low head drainage.
3. Swing joint assembly
4. Locking grate top on semi-rigid mesh tube. Use purple grate for Recycled water systems
5. Filter fabric sleeve

2.12 Irrigation Heads

A. All irrigation heads shall conform to type, size, precipitation rate, gallons per minute discharge, pressure and throw radius as shown on the Plans, unless otherwise accepted in writing.
B. In all available models, all irrigation heads shall have stainless steel risers, unless otherwise approved in writing.
C. For recycled water applications, irrigation heads shall be colored purple, have debris pocket, and wiper seals with 3 touch points.
D. Irrigation heads shall have built-in pressure regulation for pop up sprays and/or water-efficient heads.
E. Include built-in check valve where applicable to prevent low head drainage.

2.13 Drip Irrigation

A. Sub-surface dripline.
1. Flexible polyethylene tubing shall have factory-installed pressure-compensating, inline emitters spaced evenly per listed spacing.
2. Emitter shall incorporate elemental or ionic copper root intrusion prevention technology, and shall be warranted by the manufacturer to be free of emitter plugging due to root intrusion for a period of fifteen (15) years minimum.
3. Emitter shall have a built-in check valve that will hold back, at minimum, an 8.5' column of water.
4. Dripline for use with recycled water systems shall be properly and permanently marked for non-potable use.

FOR COUNCIL ONLY NOT FOR CONSTRUCTION

5. Acceptable products include Rainbird XFS-CV Series or Netafim Techline HCVXR Series, or approved equal.

B. All fittings shall be constructed of injection molded, brown plastic having a nominal outside dimension of 17mm (0.56”). Female and male threaded ends shall be capable of mating to standard PVC pipe with tapered threads.

C. Line flushing valve
   1. Valve shall be schedule 40 PVC ball valve with brass hose thread adapter.
   2. Valve box shall be rigid plastic, with lockable cover by Carson Industries, LLC or accepted equal. Boxes shall be colored green in potable applications, and purple for recycled water applications.
   3. Drip system operation indicator shall be Rainbird 1812 Pop-up spray body with 4-VAN nozzle set to 0-degree pattern, with Rainbird SA-125050 swing assembly and XFF-TFA barbed bt ½” FIPT fitting, or accepted equal.

D. Pressure Regulating Filters shall be Rainbird PRB Pressure Regulating Basket Filter, or approved equal, and shall include: Basket style body and jar-top cap constructed of heavy-duty glass-filled, UV-resistant polypropylene, with 150 PSI (10,3 bar) operating pressure rating. Standard 200 mesh (75 micron) filter screen constructed of stainless steel attached to propylene frame. Normally-open in-line pressure regulating device, constructed of durable, UV resistant non-corrosive material able to accommodate an inlet pressure rating of not less than 150 PSI (10,3 bar), with preset outlet pressure of approximately 40 PSI (2,8 bar).

2.14 Thrust Blocks

A. All thrust blocks shall be concrete. The size of the blocks shall be determined by the average safe soil-bearing load of 700 lbs. per square foot.

B. Polyethylene sheeting at thrust blocks shall be 6mil.

2.15 Quick Coupler Valves

A. For potable water, quick coupling valves shall be Rainbird #44LRC or accepted equal. For recycled water, quick coupling valves shall be Rainbird #44NP lockable or accepted equal. All quick coupling valves shall be:
   1. brass or bronze with one (1) IPS female pipe connection,
   2. two piece body with a removable upper portion (for replacement), and
   3. durable yellow covers for potable and purple for recycled.

B. Valve keys shall be brass or bronze and shall be of the same manufacturer and size as the valve.

C. Valve box shall be rigid plastic, a minimum of ten inches (10”) in diameter with lockable cover by Carson Industries, LLC or accepted equal. Boxes shall be colored green in potable applications, and purple for recycled water applications.

FOR COUNCIL ONLY NOT FOR CONSTRUCTION

D. Where recycled water is used, conform to the City of Roseville Design and Construction Standards.

2.16 Manual Valves

A. For pipe four inches (4") and larger gate valves shall be:
   1. located where shown on the Plans,
   2. flanged with Class 125 cast iron body,
   3. bronze trimmed with a non-rising stem,
   4. square operating nut,
   5. able to withstand a cold water pressure of 150 pounds per square inch, and
   6. sized to match the pipeline which the valves serve, unless otherwise shown on the Plans.

B. For pipe three inches (3") or smaller
   1. located where shown on plans
   2. lead free
   3. Able to withstand cold water pressure of 300 pounds per square inch
   4. sized to match the pipeline which the valves serve, unless otherwise shown on the Plans.
   5. Nibco T-113-LF or approved equal.

C. Pipes which feed directly into a remote control valve, ball valves shall be installed and shall:
   1. allow for manual operations,
   2. rapid on/off , drip-tight shut-off control,
   3. be constructed of bronze or brass with heavy-duty handle,
   4. operate up to 22 gallons per minute,
   5. operate between 15 and 150 pounds per square inch, and
   6. be sized to match the pipeline which the valves serve, unless otherwise shown on the Plans.

D. Valve box shall be rigid plastic, a minimum of ten inches (10") in diameter with extensions and lockable cover by Carson Industries, LLC, as shown on the Plans or accepted equal. Boxes shall be colored green in potable applications, and purple for recycled water applications.

2.17 Automatic Irrigation Controller

A. Automatic controllers shall be Calsense CS3000 or accepted equal. Each controller shall include:
   1. CS3-## – Calsense (##) Station Base Model,
   2. FM-2U – Flow Meter (Ultrasonic),
   3. -S1– Stainless Steel Enclosure with 1 hole for Stubby Antenna.
   4. CS3000 Transient Protection
   5. TP-110 – AC Line Protection,

FOR COUNCIL ONLY NOT FOR CONSTRUCTION

6. GR-STUBBY – Antennae w/2ft cable
7. On/Off Switch
8. GFI electrical outlet inside enclosure.

When multiple controllers are used, include:

1. CS3-FL – Flowsense software (for multiple controllers sharing POC and/or communications)
2. CS3-MSSE-KIT or CS3-SR-KIT – Hardwire or SR radio,

When multiple flow sensors are used, include:

11. CS3-2WIRE-OPT & CS-2W-POC (one per POC) – Additional Flow Meter interface.

B. Third-Party Communications hardware required:
1. Sierra Wireless AirLink RV55 LTE-A PRO Router (#1104303)
2. Router AC Adapter (#2000579)
3. AT-5 (or higher) Ethernet Cable - 1ft (#A3L781-01-BLU)

C. Communication wire between controllers, when required, shall be Paige Cable P7171D or accepted equal.

2.18 Control Wires

A. Direct burial solid copper wire AWG-U.F. 600 volt.
B. Common wire and two spare wires shall be minimum #12-gauge.
C. Pilot wires shall be red, minimum #14-gauge. Wire gauge shall be, at minimum:

Wire Gauge	#14	#12	#10	#8
Max. Distance (ft.)	2,500	3,250	4,000	4,800

D. Splices:
1. Wire connections at remote control valves only shall utilize 3M direct bury splice kit model #DBY (yellow) or model #DBR (red).
2. All other splices, including line splices, connections to flow meters and othersensors,shallutilize 3M Scotchcast 3570G Connector Sealing Packs, no known equal.

E. Wiring colors shall be:

USE	**COLOR**
Flow	Yellow
Master	Blue
Pump	Black
Valves	Red
Common	White
Spare	Orange
Tracer	Green

FOR COUNCIL ONLY NOT FOR CONSTRUCTION

2.19 Sleeves

A. Schedule 40 PVC 1120-1220 and two times the diameter of the pipe to be accommodated by the sleeve, one (1) for control wires and one (1) for main line, and one (1) for lateral lines.
B. Maximum one (1) line per sleeve.
C. Add one (1) spare, same size as largest.

2.20 Tracer Wire

A. Insulated solid copper wire, minimum #12 gauge. Color shall be green.

PART 3 - EXECUTION

3.01 Site Conditions

A. Prior to start of irrigation work, review the site conditions to verify that stub- outs, points of connections, sizes of the points of connections, water pressure and other essential items necessary for irrigation work to commence are as shown on the Plans and as indicated in the Specifications.
B. Notify the Inspector immediately of any existing conditions which are unacceptable for the commencement of irrigation work.

3.02 Coordination of Work

A. Coordinate all work with other trades.
B. The irrigation plan is diagrammatic. Whenever possible, locate all pipes in planted or turf areas. Do not scale off of the Plans. Where field conditions have changed, notify the Inspector immediately.

3.03 Excavation and Trenching

A. Trenches shall be dug straight and in such a manner as to completely support the pipe continuously along the bottom of the trench. In rocky conditions, over-excavation and placement of clean bedding material may be required to ensure protruding rocks do not place undue stress on pipes. Trench layout shall follow that shown on the Plans, except where accepted by the City.
B. The following minimum cover shall be provided for pipe:

Pipe Type	Minimum Cover
Pressurized Mainlines	24”
Non- Pressurized Lateral Lines	18”
Domestic Water Lines	24”
Control wires	24”
PVC Sleeves under Paving	18”
PVC Sleeves under Auto X-ings	24”

C. Install detection wire, looped in and out of valve boxes and attached to all irrigation mainlines.

FOR COUNCIL ONLY NOT FOR CONSTRUCTION

D. High voltage wires shall not be installed in the same irrigation water line trench.

3.04 Testing and Flushing

A. Pressure Testing shall occur only when the following conditions can be fulfilled:

Item Description	Condition
Quick coupler valves	Installed and capped
Electric remote control valves	Installed
Flow valve	Installed and open
Ball/Gate valves	Installed and open
Lateral lines	Disconnected
Welded PVC joints	Cured at least 24 hours
Pipe	Center loaded with backfill
Concrete Thrust Blocks	Installed and cured at least 48 hours
Couplings and fittings	Exposed
Detection wire	Installed

B. A pressure gauge shall be installed at the lowest point of the line. Continuous pressure shall be applied at a rate of 125 psi for all mainlines. The pressure shall remain stable for a minimum of two hours with no detectable leakage. Upon completion of the test, a complete examination of the line shall be conducted by the City. Leaks resulting from the test shall be repaired and the line shall be re-tested. This process shall be repeated until the line passes the leakage test.

C. All lines and risers shall be flushed prior to final installation of irrigation heads. All control valves shall be left open during the flushing process.

3.05 Backfilling and Compacting

A. Backfilling of trenches shall not occur until all tests and reviews have been performed. See inspection record contained in the Parks Construction Standards, latest edition. Any trench that is prematurely backfilled may be required to be re-dug for review.

B. Compaction of the trenched areas shall meet the following compaction rates of 95% in areas to receive paving and 85% in areas to be planted.

C. Do not flood trenches unless otherwise accepted by the City.

D. Sunken trenches shall be re-finished flush with the adjacent grades.

3.06 Backflow Prevention Device and Enclosure

A. Install per local codes and manufacturer's instructions.

B. When the flow meter is installed above grade, install a backflow prevention device enclosure with lockable gate.

FOR COUNCIL ONLY NOT FOR CONSTRUCTION

3.07 Flow Meter Installation

A. Install per local codes and manufacturer's instructions.
B. All flow meters shall be installed in ground.
C. Install 3/4" conduit from irrigation controller to flow meter valve box. Install a pull box every 100'.
D. Valve box lids shall be permanently marked identifying FM for flow meter and MV for master valve and GR for grounding rod with heat branding using stencils in a uniform location on all boxes throughout.

3.08 Pipe Installation

A. Install irrigation pipe in planted areas whenever possible.
B. All pipe and fittings shall be cleaned and free from dirt, dust and moisture.
C. Pipe may be assembled along the trench at grade to avoid undue strain on the pipe or the fittings. All solvent weld connections shall be primed before applying glue. Snake the pipe within the trench to compensate for expansion and contraction.
D. All PVC pipe and metal valve connections shall be made with threaded fittings consistent with drawings PK-15 and PK-16 of the City of Roseville Parks Construction Standards.
E. All PVC-to-PVC threaded connections shall be made with Teflon tape.
F. Install concrete thrust blocks in locations where rubber gasketed irrigation mainlines change directions, e.g. ells, tees; as required on other lines and fittings; and at the termination point of the mainline. Do not conduct a pressure test within 48 hours of the thrust block pours. The size of the thrust blocks shall be per manufacturer's instructions and shall be adequate in size to absorb thrusts up to the maximum internal water pressure. Refer to 3.18 Thrust Blocks.
G. Use glued fittings for all connections inside of a sleeve and within 20' of a sleeve.
H. When multiple pipes are in the same trench, provide a minimum 2" horizontal separation between pipes, or equal to diameter of pipe, whichever is larger. Do not stack pipes vertically.

3.09 Electric Remote Control Valves

A. Install per local codes, manufacturer's instructions, City of Roseville Design and Construction Standards and as shown on the Plans.
B. Install one (1) electric remote control valve per box and whenever possible, group valve boxes together. Align boxes in a straight and neat row and flush to finish grade. Provide a minimum of six (6) inches between boxes.
C. All valves shall be tagged for easy identification of valve number. Valve box lids shall be permanently marked identifying valve number and controller letter with heat branding using stencils in a uniform location on all boxes throughout.

FOR COUNCIL ONLY NOT FOR CONSTRUCTION

D. Each valve shall be separately saddle tapped. Manifolded valves shall be rejected.
E. Locate valve boxes outside of turf areas, adjacent to paving, i.e. sidewalks, hardscape, etc. except where shown on the Plans.
F. Provide a minimum of eighteen (18) inches of a complete set of spare control wires, looped, within all control valve boxes.

3.10 Irrigation Heads

A. Install all heads where shown on the Plans and as specified herein.
B. Turf rotary pop-up heads shall be placed two (2) inches from any edge of adjacent walkway, concrete mow band, concrete curb, header board or other hardscape edging, or as required by current WELO regulations.
C. Rotary pop-up heads shall be installed flush with the top of finish grades of turf or planting areas.
D. Sprinkler head riser nipples sizes shall match or be the same as the riser opening of the sprinkler body.
E. Install sprinkler heads with internal check valves where heads are located in low drainage areas, i.e. bottom of berms, bottom of drainage swales, toe of slopes, etc.
F. Install all heads perpendicular to ground surface with an offset from the edge of pavement as indicated in the details.

3.11 Drip Irrigation

A. Drip irrigation is to be installed in a grid pattern layout of equal spacing between rows, unless otherwise noted on approved plans.
B. All drip irrigation shall be installed sub-surface, per manufacturer's specifications. Staple all tubing to soil at 5 feet on-center spacing prior to backfilling.
C. Drip line shall be installed prior to plant installation, with the exception of 15-gallon and larger plant container sizes, which may be installed first at the discretion of the contractor.
D. Line Flushing Valves are to be installed below grade, as detailed, in a valve box with bolt-down lid to allow for periodic inspection and flushing.
    1. Minimum of One (1) Line Flushing Valve shall be installed for every fifteen (15) GPM of zone flow, and at every termination point within a zone, and shall be installed at a point farthest away from the source (typically on an exhaust header) as possible.
E. Pop-up drip system operation indicators shall be placed within eighteen inches (18") of each Flush Valve and shall not be placed such that it will be obstructed by vegetation. Place minimum twelve (12) inches from adjacent hardscapes.

FOR COUNCIL ONLY NOT FOR CONSTRUCTION

F. If required, Air/Vacuum Relief Valves shall be installed below grade in valve boxes to allow for periodic inspection.
G. Valve box lids shall be permanently marked identifying LF for Line Flush valve and AR for Air/vacuum Relief with heat branding using stencils in a uniform location on all boxes throughout.

3.12 Quick Coupler and Gate Valves

A. Install per local codes and manufacturer's instructions.
B. Locate valve boxes flush with finish grade, twelve (12) inches from walkways, curbs, header boards, etc., and within planted area whenever possible.
C. Install one (1) valve per box.
D. For quick coupler valves, install at 100 feet on center to the extent possible. Provide a 24" steel support staked adjacent to the riser using two (2) stainless steel clamps.
E. For gate valves, install at locations indicated on the Plans.
F. For valve boxes installed below grade, provide 3M ball markers.
G. Valve box lids shall be permanently marked identifying GV for gate valve and QC for quick couplers, and SB for splice boxes with heat branding using stencils in a uniform location on all boxes throughout.

3.13 Automatic Controller

A. Install per local codes and manufacturer's instructions within the specified enclosure.
B. Provide single Paige Cable P-7171D installed in conduit between all controllers.
C. Provide all necessary wiring for a complete installation between the controller and the valves.
D. Above grade wiring shall be installed in metal conduit, unless otherwise accepted. Securely mount conduit onto enclosure or wall and paint to match the adjacent surface.
E. Provide a grounding rod and bonding for each enclosure as required for lightning protection. Grounding rod shall be consistent with drawing PK-1 of the City of Roseville Parks Construction Standards. Install separate grounding rods for each enclosure where bonding is impractical.
F. Label each controller, using permanent markings, with the letter identification indicated on the Plans. Affix label on the inside of the controller cabinet door.
G. Install 110V outlet (GFIC) inside controller enclosure.
H. Provide two (2) reduced as-built irrigation diagrams, laminated and color-coded indicating controller letter, valve/station numbers, valve size, operating pressure, gallons per minute and type of planting for each valve. See Section 01 10 00: Summary of Work 1.15B.

FOR COUNCIL ONLY NOT FOR CONSTRUCTION

I. Ground test to be conducted after installation. Test results shall not exceed 25 ohms.

3.14 Control Wires

A. Wherever possible, install control wires in common trenches with mainline. The wires shall be taped in bundles at ten (10) feet on center and laid to the side of the pipe. Provide slack between ties to allow for contraction.
B. Wire valve to controller as shown on the plans.
C. Where runs are long, provide an extra three (3) feet of extra common and control wires looped at 200' intervals. Snake wires within trenches to allow for contraction.
D. Line splices shall occur in valve boxes at grade, label and allowed only on lengths greater than 2500'. Show locations on as-built plans.
E. Do not wrap wire around pipe or allow any wiring to be placed in concrete or concrete thrust blocks.
F. Install two (2) spare wires starting from the controller, looped to each valve box to the furthest valve box, without splices.

3.15 Tracer Wire

A. Install tracer wire on top of the mainline.
B. Provide a twelve-inch (12") loop in and out of each valve box. Solder all splices.
C. Where potable water lines are placed in a separate trench, install a tracer wire on top of the potable water line per City of Roseville Design and Construction Standards
D. Tracer wire shall be tested during review and pressure test of the mainline.

3.16 Sleeves

A. Install sleeves under all pavement and as shown on the Plans.
B. Install sleeves at the depths indicated in Section 3.03B above.
C. Extend sleeves a minimum of twelve (12) inches beyond the edge of pavement.
D. At every sleeve location installed in roadways, provide a spare PVC sleeve capped at each end and marked with a 3M ball marker.

3.17 Thrust Blocks

A. Install polyethylene sheeting between mainline and concrete.
B. Thrust blocks shall be formed against a solid trench wall. The thrust block cavity shall be in undisturbed soil or previously placed compacted backfill that yields an acceptable allowable bearing pressure.
C. Concrete thrust blocks shall not be poured on valve wires.

FOR COUNCIL ONLY NOT FOR CONSTRUCTION

3.18 Cross Connection Testing for Recycled Water Systems

A. The Recycled Water System shall be tested for cross connection in accordance with Uniform Plumbing Code Appendix J prior to use.

B. All testing of Recycled Water Systems must be performed utilizing a potable water source via a construction water connection per City of Roseville Construction Standards. No Recycled Water may enter a Recycled Water System until all testing is successfully completed.

C. At the time a cross connection test is to be performed, construction on both the Potable and Recycled Water Systems being tested must be complete and both systems fully operational and functioning as designed.

D. Cross connection testing shall be performed in the system by City forces with the assistance of the contractor. The test must be coordinated through the Parks Department Inspector. Allow one week's notice to schedule the cross-connection test. Depending on complexity of the site, a preliminary field meet may be required.

3.19 Coverage Test

A. Prior to planting, the Contractor shall perform a coverage test to confirm that water coverage is complete and adequate, and produces no overspray onto hardscapes. Irrigation pressure readings at the head or emission device may also be taken as part of the coverage test to confirm adequate system hydraulics.

B. The coverage test shall be performed on the entire irrigation system and shall be performed in the presence of the Parks Inspector. The irrigation system must be connected to the City water system through the water meter. Temporary connections are not allowed. On recycled water systems, the coverage test shall take place only after successful completion of the cross-connection test, with the recycled water meter in place.

C. On Park projects containing turf, a comprehensive survey of the Distribution Uniformity (Low Quarter) of each irrigation zone containing turf shall be performed by a third-party, Certified Landscape Irrigation Auditor prior to planting of turf. The irrigation system must be 100% complete, including functionality of the irrigation controller and booster pump, if present. The irrigation auditor shall prepare and submit a report listing each zone's Distribution Uniformity, including actual mapping data of individual catch cans recorded on irrigation plan sheets, and noting any potential deficiencies in the system leading to any inadequate findings. Reported deficiencies in Distribution Uniformity will be evaluated by the Project Manager and may require corrective measures prior to approval of turf planting. Deficiencies caused by improper installation shall be corrected at no additional cost to City.

FOR COUNCIL ONLY NOT FOR CONSTRUCTION

3.20 Irrigation Audit

A. A landscape irrigation audit shall be performed after all landscape and irrigation is installed. The irrigation system must be 100% complete, including functionality of the irrigation controller and booster pump, if present.
B. All landscape irrigation audits shall be conducted by a third party certified landscape irrigation auditor. Landscape audits shall not be conducted by the person who designed the landscape or installed the landscape.
C. The water audit shall conform to the specific water audit requirements of the City of Roseville Environmental Utilities Department, and any supplemental requirements from the City of Roseville Parks, Recreation & Libraries Department. The contractor shall submit a comprehensive landscape irrigation audit. This shall include, but is not limited to:
    1. A completed Irrigation Audit Report-(City of Roseville provided forms only)
    2. Complete system evaluation, including site conditions, system and flow data.
    3. Scheduling parameters used to set the irrigation controller.
    4. An Irrigation schedule for the landscape provided to the owner.
D. A minimum of 25% of all zones shall be audited. The 25% minimum shall be a representative sample of each irrigation method present (i.e. Rotors, bubblers, rotary nozzles, drip, etc.), and is in addition to any turf zones audited during the coverage test.
E. Any deficiencies noted in the audit report such as, but not limited to, run-off, overspray, obstruction of spray patterns, etc., shall be corrected and signed off as such by the original irrigation auditor prior to submission of the report. Do not submit audit reports with uncorrected deficiencies.

3.21 Clean Up

A. Each phase of work shall be immediately cleaned up. Excess equipment, material, etc., shall be legally disposed of and removed from site. All concrete, asphalt and/or decomposed granite paving shall be kept free of soil. Damage to such surfaces shall be immediately repaired to the satisfaction of the City.

PART 4 - GUARANTEE

4.01 General

A. Contractor shall provide a written guarantee covering all materials, equipment and workmanship furnished by him to be free of all defects after installation is accepted, including all defective parts that may have been found.
B. All paved areas shall be swept clean and planted areas shall be weed-free.
C. All irrigation heads shall be properly adjusted. Debris and refuse shall be removed from site prior to inspection.

FOR COUNCIL ONLY / NOT FOR CONSTRUCTION

4.02 Pre-Final (Punch List) Review

A. See Section 01 10 00 1.16 - Summary of Work for notification process.

4.03 Establishment

A. Full automated utilization of the irrigation system shall be included as part of the maintenance of the project. See Section 329000: Planting for additional information.
B. Program and utilize the establishment schedule as submitted with the turn-in items.
C. Contractor to run the system in “quantity” mode or “time plus flow” for a minimum of one (1) week.
D. Check the irrigation system weekly to ensure proper operations. Make all necessary adjustments, including watering schedule to ensure proper and healthy plant growth. At no time shall pools of water be present within any part of the project. Conversely, at no point shall dry or under-watered spots be visible upon inspection. Improper irrigation management resulting in flooding or dry conditions to the detriment of plant material may constitute an extension of the establishment period, at no additional cost to the City.

4.04 Final Review

A. The Contractor shall demonstrate to the City, valve by valve, the entire irrigation system to be operable. All heads shall be adjusted/flushed and all drip zones shall be flushed prior to the on-site review. Any item requiring adjustments shall be completed immediately and to the satisfaction of the City.
B. Provide necessary training to City staff in the proper operations and maintenance of the booster pump.
C. The date of final acceptance by the City Council or the recordation of the property transfer shall signify the start date of the warranty period. Final acceptance shall include the project in total and will not segregate any specific item or trade included in the construction of the project.

END OF SECTION

FOR COUNCIL ONLY NOT FOR CONSTRUCTION

SECTION 32 90 00
PLANTING

PART 1 - GENERAL

1.01 General Requirements

A. The requirements set forth in the General Conditions shall be in addition to the standards provided herein.

B. The requirements set forth in the Supplemental Conditions shall be in addition to the standards provided herein.

1.02 Description

A. Furnish all labor, materials and equipment for the complete installation of landscape items, including all trees, shrubs, groundcovers and turf; maintenance for the establishment of new plant materials; and all necessary appurtenances for proper planting, noted or implied, as shown on the Plans and as specified herein.

1.03 Related Work

A. Section 31 20 00: Earthwork

B. Section 32 84 00: Irrigation System

1.04 Quality Assurance

A. Provide an experienced foreman who shall directly supervise the work force during all work to be performed under this contract. The foreman shall be present during the time when work is to be performed.

B. Plant material shall conform to current “American Standards for Nursery Stock” and the State of California Grading Code of Nursery Stock, No. 1 grade. Use only nursery-grown stock.

C. All plant material shall be certified free of plant diseases and insect infestations from the County Agricultural Commissioner as required by law. Each shipment of plant material shall be required to have clearance certificates.

D. Prior to planting, a soils fertility test/analysis shall be conducted by an accepted and qualified testing laboratory. Test results shall contain existing nutrient levels, soil texture, cation exchange capacity, soluble salts, pH levels, infiltration rates and recommended soil amendments/fertilizers to ensure proper growth of the specified plantings.

FOR COUNCIL ONLY NOT FOR CONSTRUCTION

1.05 Submittals

A. Submittals for specified items are not required; however, submittals are required for any proposed substitutions or deviations from the Plans or Specifications. Additionally, submittals are required for the specific items listed below. The Contractor shall submit a materials summary sheet indicating which items will be installed as specified and which items are proposed for substitutions. The Contractor shall submit proof of order within ten (10) working days of the Notice to Proceed, indicating all specified materials have been ordered, noting “as specified” or “substitution proposed”. Submittals are required on the following items:

1. Bark mulch material,
2. Certificates of compliance for turf seed mix, soil amendments, fertilizers and hydroseed mix,
3. Sod-grown turf,
4. Soils test-with soil amendment recommendations.
5. Trees
   a) Submit for approval, plant sources including the names of nurseries proposed as sources of acceptable trees, and a list of the trees they will provide. The plant list shall include the botanical and common name and the size at the time of selection, including basal caliper and height.
   b) Submit all requests for substitutions of plant species or size for approval. Request for substitution shall be accompanied with a list of nurseries contacted in the search for the required plant and a record of other attempts to locate the required material. Requests shall also include sources of plants found that may be of a smaller or larger size, or a different shape or habit than specified, or plants of the same genus and species but different cultivar origin, or which may otherwise not meet the requirements of the specifications, but which may be available for substitution.

1.06 Soil Testing

A. Native soil and in-place topsoil shall be tested for amendment determination. Soil Tests shall include soil texture, macro nutrients, micro nutrients, lime, base saturation, pH, sodium, boron, salinity, Cation Exchange Capacity (CEC), and Organic content.

B. Submit soils report for review and approval after completion of grading operations. Soil Testing shall be performed by an agriculture-based lab, with detailed, written recommendations for soil amendments and fertilizers specific to ornamental landscape plants and turf.

FOR COUNCIL ONLY NOT FOR CONSTRUCTION

1.07 Product Delivery, Handling and Storage

A. All materials shall be delivered bearing nursery label with botanical, common names, including cultivars.

B. Carefully handle plant material to ensure that limbs are not broken during the planting or storage of the material.

C. Store plant material in a covered area on-site, protected from inclement or hot weather on-site. Keep root balls moist by frequent watering (during hot weather) of all accepted stock until such time as planting occurs.

1.08 Inspection of Plant Material

A. Notify the Project Manager a minimum of 48 hours prior to date of delivery. All plant material is subject to inspection at the time of delivery. A sample number of plants will be inspected for the following items:

If the sample....	then the plant shall be...
is healthy, shapely and well rooted	accepted.
bears a strong central leader	accepted.
is wilted, wind-blown or sunburned	rejected.
is root-bound, restricted or deformed	rejected.
does not bear a strong central leader or has been severely pruned back	rejected.

B. Stock to be consistent with CALFIRE Nursery/Tree Quality Cue card and Root Management Cue Card. Inspector may require contractor to remove tree or plant stock from plant containers to examine roots.

C. 15 gal tree needs to have at least 1” in basal caliper, a 24” box tree needs to have at least 2” in basal caliper, a 36” box tree needs to have at least 3” in basal caliper. Basal caliper is measured as 6” above the ground.

D. Based on the sample inspection, the Project Manager or Inspector reserves the right to reject any or all of the plant material delivered. All rejected plant material shall be immediately disposed of off-site.

1.09 Record Drawings

A. The Contractor shall keep an accurate record of the as-built conditions of the landscaping. These records shall be updated daily and kept at the construction site. At any time, the Inspector may examine the conditions of the “as-builts” to ensure compliance of the above.

FOR COUNCIL ONLY - NOT FOR CONSTRUCTION

PART 2 - PRODUCTS

2.01 Plants

A. The material to be planted shall conform to that indicated on the plans, unless otherwise accepted. The quantity shown on the Plans is approximate and is

furnished for convenience only. Verify all quantities prior to ordering plant material.

2.02 Turf

A. Turf shall be *seed or sod (see Scope of Work Plan for Add Alternates)*.
B. Seed –
   1. 98% pure, weed-free mixture with a minimum of 95% germination. Deliver on-site unopened and in the original containers.
   2. 100% Turf Saver RTF (Rhizomatous Tall Fescue) by Barenbrug or accepted equal.
   3. Turf seed mix shall be Blue tag certified.
C. Sod – Tall fescue blend with named, improved turf-type varieties only. Blend shall contain a minimum 25% Lateral Spread, Rhizomatous, or Self-Repair type tall fescue. Sod shall be non-netted, and contain no more than 10% Bluegrass.
D. Seed / Sod must be submitted and accepted by the Project Manager prior to ordering.

2.03 Soil Amendment

A. As recommended by soils test report.

2.04 Mulch

A. Regular "Walk-on" fir bark as manufactured by Redi-Gro Corporation, Sacramento, CA (916) 381-6063, Mallard Creek, Inc, Rocklin, CA (916) 645-1681, My Bark Company, Inc., Linden, CA (209) 649-4250 or accepted equal.
B. Decorative bark, shredded lumber or saw dust, and construction debris are not permitted. The mulch must be free of needles.

2.05 Topsoil

A. Stockpiled, on-site material.
B. Imported topsoil shall be natural, friable, well-draining, free from admixture of subsoil and foreign objects larger than one inch (1") in diameter, free from toxins or any other harmful substance which may deter healthy plant growth.
C. Perform a soils test for all imported soil. Soil test shall comply with Section 1.06. Submit soils report for review and approval prior to import activities.

2.06 Pre- and Post- Emergent Herbicide

A. Clean, and non-staining. Consult with a pesticide specialist.

2.07 Tree Stakes and Ties

A. Trees furnished in #15 nursery containers require 2" diameter stakes. Trees less than 8' in height require an 8' stake; trees 8' or greater in height require a 10' stake. Stakes shall be pine or Douglas fir (pressure or non-pressure treated).

FOR COUNCIL ONLY NOT FOR CONSTRUCTION

B. Trees furnished in 24” boxes or larger require 3” diameter by 10’ long stakes. Stakes shall be, pine or Douglas fir (pressure or non-pressure treated).
C. Tree ties and Tree Guying shall be Super Tree Tie, bursting strength 300psi, tensile strength 300lbs , 1” vinyl impregnated Nylon, waterproof, Manufactured by: Arthur Enterprises. Cut to length. Color to be Green.

2.08 Native Seed

A. Where required, native seed shall be applied as follows:
1. Upland areas

Elymus glaucus (Blue Wildrye)	10.0 lbs/acre
Nassella pulchra (Purple Needlegrass)	9.0 lbs/acre
Nassella cernua (Nodding Needlegrass)	6.0 lbs/acre
Melica caljfornica (Californiameljc)	3.0 lbs/acre
Vulpia microstachys (Small Fescue)	3.0 lbs/acre
Poa secunda (Native Pine Bluegrass)	3.0 lbs/acre
Bromus carinaws (California Brome)	2.0 lbs/acre

2. Wildflowers (addition to seed mix(es) above, if specified)

Clarkia amoena (Farewell to Spring)	0.5 lbs/acre
Eschscholzia caljfornica (California Poppy)	2.0 lbs/acre
Lupinus nanus {Sky Lupine)	3.5 lbs/acre
Nemophila menziesii (Baby Blue Eyes)	1.5 lbs/acre
Lasthenia californica (Common Goldfields)	1.5 lbs/acre

B. Areas with sandy, dry soil shall receive: Zorro Annual Fescue 6 lbs/acre, Rose Clover 9 lbs/acre
C. A fertilizer consisting of 15-15-15 shall be applied at a rate of one half pound per 1,000 square feet. Fertilizer shall be Natural-based, slow release, and balanced in N, P, & K.
D. Seed for creek banks shall conform to the latest requirements of the California Department of Fish and Game.

FOR COUNCIL ONLY NOT FOR CONSTRUCTION

PART 3 - EXECUTION

3.01 Site Preparations

A. Prior to start of landscaping work, review the site conditions to verify final grades have been established, plant/turf beds are weed free, and the irrigation system is operational as shown on the Plans and as indicated in the Specifications.

B. For landscaping within all street right-of-ways, conduct a soils analysis test of the existing soils and remove all lime-treated soils, aggregate base or other non-organic material to a minimum depth of two feet before planting or irrigation installation. Import topsoil to bring the finish grade to specified grades. Submit the soils analysis test results of the imported material prior to import.
C. Notify the Inspector immediately of any existing conditions which are unacceptable for the commencement of landscaping work.

3.02 Coordination of Work

A. Coordinate all work with other trades.

3.03 Preparation of Planting and Turf Areas

A. Upon completion of grading and underground activity, Contractor shall obtain a soils test as outlined in 1.06.
B. Place stockpiled topsoil in all areas to receive planting or turf to a minimum depth of twelve inches (12”).
C. Rip topsoil surface in two directions to a minimum depth of twelve inches (12”).
D. Spread soil amendments at the rates indicated in the soils report.
E. Rototill amendments to recommended depths. Till amendments to a depth of 6” or as recommended by soils report.
F. Remove all rock and debris which are greater than ½ inch in areas to receive turf and one inch (1”) in areas to be planted.
G. All planted and turf areas to be smooth and uniform in grade as shown on the Plans.
H. Planting areas to be sloped to drain as shown on the Plans.

3.04 Storage of Plants and Trees

A. Protect materials from deterioration during delivery and storage. Adequately protect plants from drying out, exposure of roots to sun, wind or extremes of heat and cold temperatures. If planting is delayed more than 24 hours after delivery, set plants in a location protected from sun and wind. Provide adequate water to the root ball package during the shipping and storage period, including weekends and Holidays.
B. Soil moisture shall be maintained above wilting point and below field capacity for the root ball substrate or soil.
C. All plant materials must be available for observation prior to planting. Any plants determined to damaged or distressed due to improper watering may be rejected by inspector and shall be replaced at no cost to City.

3.05 Plant Installation

A. Tree and Shrub Planting

FOR COUNCIL ONLY NOT FOR CONSTRUCTION

1. Remove only those plants which will be planted the same day. Place such plants in the proposed locations for review and accepted by the City prior to actual planting. Notify the Inspector a minimum of 48 hours prior to day of planting.
2. Dig planting pits as shown on the Plans and as shown in the Parks Construction Standards. Scarify the sides and bottom of pit to prevent glazing. Fill pit completely with water and allow the water to completely drain from the pit prior to actual planting.
3. Relocate any plantings taller than 6” in height that fall in front of any irrigation head in order to ensure proper coverage of the irrigation system.
4. For pits that retain water, completely penetrate the hardpan layer at the bottom of the pit and backfill with topsoil. Fill pit with water to test and ensure proper drainage.
5. Prior to tree planting a central leader needs to be established by structural pruning, as necessary. Codominant leaders need to be removed or suppressed by structural pruning. Refer to the CALFIRE "Tree Training", "Tree Planting", and "Tree Quality" cue cards and "Tree and Plant Root Management Standard and Quality Expectations" contained in Section 5 of these Standards.
6. Plants shall be removed from their containers only at the time of placement within the plant pit. Perform root pruning on all four sides of the root ball by shaving and cutting away the root ball periphery to reduce the amount of circling roots. Starting from the top and then cutting/slicing down to the bottom of the root ball. On a 15 gal container at least 1-1.5 inches of the root ball periphery needs to be removed by slicing or shaving. On a 24” and 36”box tree at least 2 inches of the root ball periphery needs to be removed by slicing or shaving. A sharp hand pruning saw needs to be used for the slicing or shaving of the root ball. Refer to the CALFIRE "Root Management" cue card contained in Section 5 of these Standards. This process will remove many girdling and circling roots deflected by the container wall and allows for root penetration within the planting basin. Spread all roots to the side to allow proper root development. Add native backfill and amendments as shown in the Parks Construction Standards and as recommended by the soils testing laboratory.
7. Plant tree at least three inches (2”) above grade on mount to prevent bowl effect. The tree’s beginning root flare must be located at top of grade with installed sod.
8. Carefully place plant into the plant pit without damaging the root ball. Water the backfill until saturated. For trees, water in by hand after planting using at least ten (10) gallons of water, minimum.

FOR COUNCIL ONLY NOT FOR CONSTRUCTION

9. Where mowing will occur, provide an eight-foot (8') minimum horizontal clearance between trees and other site improvements, including shrubs.
10. Tree ties should be installed via a figure eight loop and each tie shall be secured with a nail on the tree stake. Install two (2) Super Tree Ties at 2/3 of tree height and two (2) Super Tree Ties at ½ of tree height.
11. Tree stakes should be inserted into the ground to a minimum depth of 18".

B. Groundcover Planting
   1. Place groundcover plants in neat, straight, and parallel rows, triangularly spaced as shown on the Plans and as indicated herein.
   2. Start the first row of planting at a distance equal to the on-center spacing required per plan, minimum, from the edge of the adjacent hardscape, mow band or header board.
   3. Groundcover shall be installed to the outside edge of the water basins of trees or shrubs.

3.06 Seeding- Turf and Native

(Hydroseeding natural areas)

A. Lightly scarify areas to be hydroseeded.
B. Tank, hose and associated apparatus must be thoroughly clean and free of debris or other material prior to placement/spraying of seed.
C. Hydroseed turf mix shall contain the following:

Material	**Application Rate**
Turf Seed	Per Manufacturer's Recommendations
Wood Cellulose Fiber Mulch	60 lbs. per 1,000 SF
Binder	Per Manufacturer's Recommendation
Fungicide (turf only)	1/3 lb. per 1,000 SF
Fertilizer	15-15-15 All Purpose Fertilizer. Rate per Manufacuter's Recommendation
Soil Conditioner	Per Soil Conditioner soils lab recommendation and as approved by Parks, Recreation & Libraries Department

D. Blend mix in a hydraulic mixer until all material is consistently blended.
E. Apply mix at a rate of 125 pounds per 1,000 square feet unless otherwise recommended by the manufacturer.
F. Spray mixture consistently over the area to be hydroseeded. Protect adjacent areas such as paving, walls, play areas and other from overspray.
G. At the end of each day of spraying operations, clean up all areas where overspray has occurred.
H. Once seed is placed, it should not be allowed to dry out.

FOR COUNCIL ONLY NOT FOR CONSTRUCTION

3.07 Sod- Turf

A. Remove all “humps” and depressions prior to sodding.
B. Keep all sod rolls shaded and moist prior to installation.
C. Do not store sod rolls more than one (1) day. Sod shall be laid upon delivery.
D. Unroll sod one at a time for immediate installation.
E. Provide tight seam between rolls of sod (less than 1/8” gaps).
F. Stagger rows so that the ends of sod rolls are stepped.
G. For turf areas where sod is partially provided, add topsoil at all transition edges to same as finish grade.
H. Sod planted during high Summer temperatures may require fungicide application(s) as a preventative measure. A Pest Control Advisor should be consulted for recommendations. Contractor is responsible for the continued health and establishment of sod and any costs of preventative treaments.

3.08 Mulch

A. Prior to placing mulch, apply post-emergent herbicide to any weeds present, per label directions. After achieving die-off, weeds shall be mechanically cut down or hand-pulled to allow for mulch installation.
B. Prior to placing mulch, apply pre-emergent herbicide in all planting areas, per label directions.
C. Apply three inches (3”) of mulch in all landscape planter areas.
D. Keep mulch a minimum of three inches (3”) away from the trunks of all woody shrubs and four inches (6”) away from all trees. Taper mulch profile away from this point to prevent subsequent collection of mulch against trunks.

3.09 Watering

A. Upon completion of each planting or turf area, irrigate appropriately to ensure proper health and growth.
B. Continually adjust the irrigation for plant needs regardless of air temperature.

3.10 Clean-up

A. Upon completion of planting operations, collect and remove from site all empty plant containers, debris, rubbish and other trash.
B. Sweep clean and wash all hardscape areas.
C. Clean up shall occur, at minimum of once a week, at the end of the work week.
D. Maintain the entire site in a clean condition to the satisfaction of the City.

3.11 Pre-Final (Punch List) Review

A. See Section 011000 1.16 of the Summary of Work for notification process.

FOR COUNCIL ONLY NOT FOR CONSTRUCTION

B. The following conditions must be met in order for planting to be considered towards substantial completion, as required to enter into the establishment period described in Section 011000, 1.16:
   1. For seeded turf:
      a. Upon completion of the second mowing of completely germinated turf. Second mowing is defined as full coverage of turfed area 90% weed free.
      b. Root depth – Turf grass roots shall be healthy, creamy-white in color and be 4” or greater in length/depth as measured from the soil surface to root tip. This shall be consistent throughout turfed area.
      c. Turf shall be of uniform green color with no visible signs of stress due to soil fertility, moisture, disease or pests.
   2. For sodded turf:
      a. Accepted installation of the sod.
      b. Turf shall be of uniform green color with no visible signs of stress due to soil fertility, moisture, disease or pests.
   3. For trees and shrubs:
      a. Trees and shrubs shall be properly installed, and with no visible signs of stress due to soil fertility, moisture, disease or pests.

3.12 Establishment Period

A. Active maintenance is required throughout the entire establishment period:
   1. Maintain turf to a height of two and one half inches (2-1/2”) for cool season turf varieties and one and one half inches (1-1/2”) for warm season turf varieties. Maintained height shall be measured from the surface of finish grade to the top of the leaf blade throughout the establishment period, and mowed as frequently as required to maintain said height. At no time shall the leaf blade be mowed or cut more than 1/3 of the length of the blade. Root mass/depth must remain consistent as measured at the start of establishment or greater.
   2. Edge all turf areas along hardscape edges.
   3. Re-seed all bare areas within the turf as soon as evident.
   4. Immediately replace all dead plants.
   5. As necessary, raise all trees and shrubs which have sunk within the plant pit beyond the levels indicated in the Standard details.
   6. Keep all areas free of weeds, pests and disease.
   7. For trees located in turf areas, maintain a circle free of turf at a distance described in the Standard details
B. Prior to the start of the final thirty (30) days of establishment:
   1. All plant replacements shall be completed.
   2. All plantings and turf shall be thriving and in a healthy condition.

FOR COUNCIL ONLY NOT FOR CONSTRUCTION

3. The lack of active maintenance prior to the final thirty (30) days may constitute a delay in the start of the final thirty (30) days of the establishment period.

3.13 Final Review

A. The Inspector shall review the site for completion of items noted, but not limited to, “B” below. All corrective action is required to enter into the final thirty (30) days of establishment.
B. The site shall be prepared for review, by ensuring that:
   1. All spray heads have been properly adjusted,
   2. Dead plants have been replaced,
   3. Planting areas have been weeded,
   4. Turf areas have full germination, are consistent in green color and are weed-free,
   5. Walkways and paved areas have been swept and washed, and
   6. Turf roots meet standards outlined in 3.10
C. Failure to complete any one or all of the above items may constitute non-performance of the final review and will require re-scheduling. In this case, the cost of the extended establishment period shall be at no additional cost to the City.

PART 4 - GUARANTEE

4.01 General

A. Contractor shall provide a written guarantee covering all plant materials (trees & shrubs) furnished by them to be free of all defects or disease and that all plants are in a healthy and thriving condition at the completion of the contract. Deciduous plant material shall be warranted beyond the time of contract completion until such time as growth becomes evident.
B. All plants, except those provided by the City, shall be warrantied for a period of one (1) year, commencing on the date of final acceptance. The warranty shall be as outlined in Section 011000: Summary of Work, paragraph 1.19.

FOR COUNCIL ONLY NOT FOR CONSTRUCTION

END OF SECTION

FOR COUNCIL ONLY NOT FOR CONSTRUCTION

SECTION 33 00 00
UTILITIES

PART 1 - GENERAL

1.01 General Requirements

A. The requirements set forth in the General Conditions shall be in addition to the standards provided herein.
B. The requirements set forth in the Supplemental Conditions shall be in addition to the standards provided herein.
C. The standards set forth in the City of Roseville Design and Construction Standards, latest edition, for storm drainage throughout the project and for sanitary sewer installations within the public rights-of-ways, easements, or as shown on the improvement plans shall be in addition to the standards provided herein.
D. The standards set forth in the latest edition of the California Building Code (CBC) for sanitary sewer installation within the project site, outside of the public right-of-way or easement shall be in addition to the standards provided herein.

1.02 Description

A. Furnish all labor, materials and equipment for the complete installation of the storm drain system and sanitary sewer pipe, and necessary appurtenances as shown on the Plans and as specified herein.
B. Submit a materials listing for review and approval prior to commencement of specified work.

1.03 Related Work

A. Section 31 10 00: Clearing and Grubbing
B. Section 31 20 00: Earthwork

1.04 Safety Requirements

A. Furnish, install and maintain required sheeting, shoring, bracing, and other methods to ensure complete and safe work environment for all workers. Upon completion of work, remove all bracing, shoring, etc. in its entirety, unless otherwise directed by the Inspector.
B. Prior to excavation or trenching, the Contractor shall contact USA Alert (800)
C. 227-2600 to locate all known utilities a minimum of 48 hours prior to start of work. During the course of construction, the Contractor shall take every precaution to maintain and protect utilities noted to remain. Said utilities shall remain operational at all times, unless otherwise noted on the plans.

FOR COUNCIL ONLY NOT FOR CONSTRUCTION

D. The existing utilities are shown on the Plans based on the information available at the time of contract document development. The City shall not assume responsibility for any inaccuracies or incompleteness of the Plans based on such information. The Contractor shall immediately notify, upon damage of any pipeline or facility, the Owner and/or its agents and take every action necessary to repair or replace damaged facilities to the satisfaction of the Inspector, and at no additional cost to the City.
E. Trenches, excavations and repair of pavement shall be consistent with Section 31 20 00: Earthwork.

1.05 Coordination

A. The piping system as shown on the Plans is diagrammatic. The Contractor shall make reasonable adjustments to the layout to avoid conflicts, based on actual field conditions. Said changes shall not interfere with the design intent of the system.

1.06 Tolerance

A. The allowable tolerance for the installation of pipe is 0.05 feet within grades or spot elevations indicated on the Plans.

1.07 Product Storage

A. Take every precaution to protect the materials and pipes from damage during the delivery, storage and installation of the pipe system. Store in a cool, contained area, protected from direct sunlight and per manufacturer's recommendations. Pipe shall be supported on firm level ground at the site.

1.08 Record Drawings

A. The Contractor shall keep an accurate record of the as-built conditions of the storm drain and sanitary sewer system. These records shall be updated daily and kept at the construction site. At any time, the Inspector may examine the conditions of the "as-builts" to ensure compliance of the above.

PART 2 - PRODUCTS

2.01 General

A. All products shall conform to City of Roseville Design and Construction Standards, latest edition, except as noted below.

2.02 Drain Pipe

A. Solid drainpipe shall be PVC SDR 35 and shall conform to ASTM D1784, or accepted equal. Gasketed connections shall conform to ASTM F477.

FOR COUNCIL ONLY NOT FOR CONSTRUCTION

B. Perforated drainpipe shall be smooth walled PVC, open per Caltrans Section 68-1.02K, or accepted equal.

2.03 Drain Rock

A. Drain rock shall be Class 2 washed, ¾" diameter.

2.04 Filter Fabric

A. Filter fabric shall be Mirafi 140N, or accepted equal.

2.05 Drains

A. Drain Inlets shall be pre-cast and a minimum size of twenty-four inches (24") square or round by Jensen Precast, or accepted equal.
   1. Grate shall be heavy duty, cast iron, walk-on, and bolt down.
   2. Box extensions shall be Jensen Precast, or accepted equal.
   3. The base shall be six inches (6") thick.
   4. Walls shall be six inches (6") thick.
   5. A "No Dumping" Metal Storm Drain Marker shall be affixed to the concrete color of each drain inlet (See Detail DR-20)
   6. Contractor may install cast-in-place drain inlets in lieu of pre-cast drain inlets. Submit shop drawings and concrete mix design for review and approval.

B. Channel Drains for baseball/softball backstop areas shall be Polycast 600 series pre-sloped trench drains with galvanized steel slotted grates or accepted equal.

C. Sanitary sewer clean outs shall be as specified in the City of Roseville, Design and Construction Standards, latest edition.

2.06 Manholes

A. Manholes shall have tongue and groove joints, be forty-eight inches (48") minimum in diameter, meeting ASTM C-478.

B. Covers shall be cast iron.

C. All components shall conform to the City of Roseville Design and Construction Standards, latest edition.

2.07 Tracer Wire

A. Insulated solid copper wire, minimum #12 gauge. Color per City of Roseville Design and Construction Standards.

2.08 Sanitary Sewer Pipe

A. Vitrified clay pipe (VCP) shall be as specified in Section 91 Sanitary Sewer in the City of Roseville, Design and Construction Standards, latest edition.

B. PVC SDR 35 may be used for drinking fountain drain applications only, with prior approval, and shall conform to ASTM D3034.

FOR COUNCIL ONLY NOT FOR CONSTRUCTION

2.09 Potable Water Warning Tape

A. On sites with both Recycled water and potable water lines. Blue plastic tape, 3 inches wide, with the words “CAUTION: POTABLE WATERLINE” imprinted in minimum 1-inch high, black letters per City of Roseville Design and Construction Standards. Imprinting shall be continuous and permanent.

PART 3 - EXECUTION

3.01 General

A. All pipes shall slope uniformly from given elevations shown on the Plans.
B. All pipes shall be accurately laid true to line and grade, utilizing accepted construction methods.
C. Damaged or cracked pipe and fittings shall not be installed and shall be removed from site.
D. Install all pipe in locations shown on the Plans, except where existing conditions necessitate minor changes.
E. All pipe and fittings shall be kept clean and closed throughout the course of construction.
F. Connections to existing sanitary sewer stubs shall be “TV-ed” and air tested prior to the start of construction per the City of Roseville Design and Construction Standards, latest edition.

3.02 Installation

A. Installation of the specified pipe lines shall conform to the City of Roseville Design and Construction Standards, latest edition.
B. Notify the Inspector a minimum of 48 hours prior to covering of work to ensure timely inspections.
C. Cutting of AC or concrete paving shall be clean, vertical and straight, using a saw, or other tool specific to this application. Replace paving to existing or better condition prior to work.
D. Trench and backfill shall be per City of Roseville Design and Construction Standards, latest edition.
E. Catch basins and drain inlets shall be installed with a concrete collar with “No Dumping” message and fish symbol depressed into the concrete or bolted in place, consistent with Drawing DR-20 the City of Roseville Design and Construction Standards, latest edition.
F. Drain inlets installed in mulched planter areas shall have a 12-inch wide collar of 2- to 6-inch river cobble placed over filter fabric.
G. Channel drains shall be set per manufacturer’s instructions. Place slotted grates along the entire length of the backstop, including wing fencing, wherever concrete is placed adjacent to the backstop system. Provide a below grade

FOR COUNCIL ONLY NOT FOR CONSTRUCTION

piped connection at all gate openings into the infield area. Do not install grated drain sections at these entry/exit points.

H. Manholes shall be per City of Roseville Design and Construction Standards, latest edition. Install grate flush with finish grade.

I. Sanitary Sewer Clean-outs shall be installed with 3M ball markers and shall be located within planted or turf areas, whenever possible. Place clean-outs at 100' intervals throughout the project. Clean-outs shall not be located within play areas. Install per City of Roseville Design and Construction Standards, latest edition.

J. Upon completion, thoroughly flush storm drain system in the presence of the Parks Inspector.

K. Installation of additional products not listed in the City Standards.

3.03 Tracer Wire

A. Install tracer wire on top of the potable water lines.

B. Tracer wire shall be continuous with no splices.

3.04 Potable Water Warning Tape

A. To be used on all potable water piping installed within the same project limits as on-site recycled water piping.

B. Install plastic warning tape in pipe backfill, six inches above pipe, for the entire length of the pipe.

3.05 Cleaning

A. Keep site clean at all times. Remove from the site all debris and rubbish and legally dispose.

END OF SECTION

FOR COUNCIL ONLY NOT FOR CONSTRUCTION

DRAWINGS

Project: JM-52 Park Project

Project drawings are issued as a separate plan set,
titled "JM-52 Park"
dated 1/28/2026
as prepared by Fuhrman - Leamy Land Group

FOR COUNCIL ONLY NOT FOR CONSTRUCTION

TEXT OF AB 626

Assembly Bill No. 626

CHAPTER 810

An act to add and repeal Section 9204 of the Public Contract Code, relating to public contracts.

[Approved by Governor September 29, 2016. Filed with Secretary of State September 29, 2016.]

LEGISLATIVE COUNSEL'S DIGEST

AB 626, Chiu. Public contracts: claim resolution.

Existing law prescribes various requirements regarding the formation, content, and enforcement of state and local public contracts. Existing law applicable to state public contracts generally requires that the resolution of claims related to those contracts be subject to arbitration. Existing law applicable to local agency contracts prescribes a process for the resolution of claims related to those contracts of $375,000 or less.

This bill would establish, for contracts entered into on or after January 1, 2017, a claim resolution process applicable to any claim by a contractor in connection with a public works project. The bill would define a claim as a separate demand by the contractor for one or more of the following: a time extension for relief from damages or penalties for delay, payment of money or damages arising from work done pursuant to the contract for a public work, or payment of an amount disputed by the public entity, as specified.

This bill would require a public entity, defined to exclude certain state entities, upon receipt of a claim sent by registered or certified mail, to review it and, within 45 days, provide a written statement identifying the disputed and undisputed portions of the claim. The bill would authorize the 45-day period to be extended by mutual agreement. The bill would require any payment due on an undisputed portion of the claim to be processed within 60 days, as specified. The bill would require that the claim be deemed rejected in its entirety if the public entity fails to issue the written statement.

This bill would authorize, if the claimant disputes the public entity's written response or if the public entity fails to respond to a claim within the time prescribed, the claimant to demand to meet and confer for settlement of the issues in dispute. The bill would require any disputed portion of the claim that remains in dispute after the meet and confer conference to be subject to nonbinding mediation, as specified. The bill would provide that unpaid claim amounts accrue interest at 7% per annum. The bill would prescribe a procedure by which a subcontractor or lower tier contractor may make a claim through the contractor.

This bill would require the text of these provisions, or a summary, to be set forth in the plans or specifications for any public work which may give rise to a claim. The bill would specify that a waiver of these rights is void and contrary to public policy, except as specified. The bill would also specify that it does not impose liability on a public entity that makes loans or grants available through a competitive application process, for the failure of an awardee to meet its contractual obligations.

FOR COUNCIL ONLY NOT FOR CONSTRUCTION

By increasing the duties of local agencies and officials, this bill would impose a state-mandated local program.

This bill would, on January 1, 2020, repeal the provision establishing the claim resolution process.

This bill would specify that these provisions constitute a matter of statewide concern.

The California Constitution requires the state to reimburse local agencies and school districts for certain costs mandated by the state. Statutory provisions establish procedures for making that reimbursement.

This bill would provide that, if the Commission on State Mandates determines that the bill contains costs mandated by the state, reimbursement for those costs shall be made pursuant to these statutory provisions.

The people of the State of California do enact as follows:

SECTION 1. Section 9204 is added to the Public Contract Code, to read:

9204. (a) The Legislature finds and declares that it is in the best interests of the state and its citizens to ensure that all construction business performed on a public works project in the state that is complete and not in dispute is paid in full and in a timely manner.

(b) Notwithstanding any other law, including, but not limited to, Article 7.1 (commencing with Section 10240) of Chapter 1 of Part 2, Chapter 10 (commencing with Section 19100) of Part 2, and Article 1.5 (commencing with Section 20104) of Chapter 1 of Part 3, this section shall apply to any claim by a contractor in connection with a public works project.

(c) For purposes of this section:

(1) "Claim" means a separate demand by a contractor sent by registered mail or certified mail with return receipt requested, for one or more of the following:

(A) A time extension, including, without limitation, for relief from damages or penalties for delay assessed by a public entity under a contract for a public works project.

(B) Payment by the public entity of money or damages arising from work done by, or on behalf of, the contractor pursuant to the contract for a public works project and payment for which is not otherwise expressly provided or to which the claimant is not otherwise entitled.

(C) Payment of an amount that is disputed by the public entity.

(2) "Contractor" means any type of contractor within the meaning of Chapter 9 (commencing with Section 7000) of Division 3 of the Business and Professions Code who has entered into a direct contract with a public entity for a public works project.

(3) (A) "Public entity" means, without limitation, except as provided in subparagraph (B), a state agency, department, office, division, bureau, board, or commission, the California State University, the University of California, a city, including a charter city, county, including a charter county, city and county, including a charter city and county, district, special district, public authority, political subdivision, public corporation, or nonprofit transit corporation wholly owned by a public agency and formed to carry out the purposes of the public agency.

(B) "Public entity" shall not include the following:

(i) The Department of Water Resources as to any project under the jurisdiction of that department.

(ii) The Department of Transportation as to any project under the jurisdiction of that department.

FOR COUNCIL ONLY NOT FOR CONSTRUCTION

(iii) The Department of Parks and Recreation as to any project under the jurisdiction of that department.

(iv) The Department of Corrections and Rehabilitation with respect to any project under its jurisdiction pursuant to Chapter 11 (commencing with Section 7000) of Title 7 of Part 3 of the Penal Code.

(v) The Military Department as to any project under the jurisdiction of that department.

(vi) The Department of General Services as to all other projects.

(vii) The High-Speed Rail Authority.

(4) "Public works project" means the erection, construction, alteration, repair, or improvement of any public structure, building, road, or other public improvement of any kind.

(5) "Subcontractor" means any type of contractor within the meaning of Chapter 9 (commencing with Section 7000) of Division 3 of the Business and Professions Code who either is in direct contract with a contractor or is a lower tier subcontractor.

(d) (1) (A) Upon receipt of a claim pursuant to this section, the public entity to which the claim applies shall conduct a reasonable review of the claim and, within a period not to exceed 45 days, shall provide the claimant a written statement identifying what portion of the claim is disputed and what portion is undisputed. Upon receipt of a claim, a public entity and a contractor may, by mutual agreement, extend the time period provided in this subdivision.

(B) The claimant shall furnish reasonable documentation to support the claim.

(C) If the public entity needs approval from its governing body to provide the claimant a written statement identifying the disputed portion and the undisputed portion of the claim, and the governing body does not meet within the 45 days or within the mutually agreed to extension of time following receipt of a claim sent by registered mail or certified mail, return receipt requested, the public entity shall have up to three days following the next duly publicly noticed meeting of the governing body after the 45-day period, or extension, expires to provide the claimant a written statement identifying the disputed portion and the undisputed portion.

(D) Any payment due on an undisputed portion of the claim shall be processed and made within 60 days after the public entity issues its written statement. If the public entity fails to issue a written statement, paragraph (3) shall apply.

(2) (A) If the claimant disputes the public entity's written response, or if the public entity fails to respond to a claim issued pursuant to this section within the time prescribed, the claimant may demand in writing an informal conference to meet and confer for settlement of the issues in dispute. Upon receipt of a demand in writing sent by registered mail or certified mail, return receipt requested, the public entity shall schedule a meet and confer conference within 30 days for settlement of the dispute.

(B) Within 10 business days following the conclusion of the meet and confer conference, if the claim or any portion of the claim remains in dispute, the public entity shall provide the claimant a written statement identifying the portion of the claim that remains in dispute and the portion that is undisputed. Any payment due on an undisputed portion of the claim shall be processed and made within 60 days after the public entity issues its written statement. Any disputed portion of the claim, as identified by the contractor in writing, shall be submitted to nonbinding mediation, with the public entity and the claimant sharing the associated costs equally. The public entity and claimant shall mutually agree to a mediator within 10 business days after the disputed portion of the claim has been identified in writing. If the parties cannot agree upon a mediator, each party shall select a mediator and those mediators shall select a qualified neutral third party to mediate with regard to the disputed portion of the claim. Each

FOR COUNCIL ONLY NOT FOR CONSTRUCTION

party shall bear the fees and costs charged by its respective mediator in connection with the selection of the neutral mediator. If mediation is unsuccessful, the parts of the claim remaining in dispute shall be subject to applicable procedures outside this section.

(C) For purposes of this section, mediation includes any nonbinding process, including, but not limited to, neutral evaluation or a dispute review board, in which an independent third party or board assists the parties in dispute resolution through negotiation or by issuance of an evaluation. Any mediation utilized shall conform to the timeframes in this section.

(D) Unless otherwise agreed to by the public entity and the contractor in writing, the mediation conducted pursuant to this section shall excuse any further obligation under Section 20104.4 to mediate after litigation has been commenced.

(E) This section does not preclude a public entity from requiring arbitration of disputes under private arbitration or the Public Works Contract Arbitration Program, if mediation under this section does not resolve the parties' dispute.

(3) Failure by the public entity to respond to a claim from a contractor within the time periods described in this subdivision or to otherwise meet the time requirements of this section shall result in the claim being deemed rejected in its entirety. A claim that is denied by reason of the public entity's failure to have responded to a claim, or its failure to otherwise meet the time requirements of this section, shall not constitute an adverse finding with regard to the merits of the claim or the responsibility or qualifications of the claimant.

(4) Amounts not paid in a timely manner as required by this section shall bear interest at 7 percent per annum.

(5) If a subcontractor or a lower tier subcontractor lacks legal standing to assert a claim against a public entity because privity of contract does not exist, the contractor may present to the public entity a claim on behalf of a subcontractor or lower tier subcontractor. A subcontractor may request in writing, either on his or her own behalf or on behalf of a lower tier subcontractor, that the contractor present a claim for work which was performed by the subcontractor or by a lower tier subcontractor on behalf of the subcontractor. The subcontractor requesting that the claim be presented to the public entity shall furnish reasonable documentation to support the claim. Within 45 days of receipt of this written request, the contractor shall notify the subcontractor in writing as to whether the contractor presented the claim to the public entity and, if the original contractor did not present the claim, provide the subcontractor with a statement of the reasons for not having done so.

(e) The text of this section or a summary of it shall be set forth in the plans or specifications for any public works project that may give rise to a claim under this section.

(f) A waiver of the rights granted by this section is void and contrary to public policy, provided, however, that (1) upon receipt of a claim, the parties may mutually agree to waive, in writing, mediation and proceed directly to the commencement of a civil action or binding arbitration, as applicable; and (2) a public entity may prescribe reasonable change order, claim, and dispute resolution procedures and requirements in addition to the provisions of this section, so long as the contractual provisions do not conflict with or otherwise impair the timeframes and procedures set forth in this section.

(g) This section applies to contracts entered into on or after January 1, 2017.

(h) Nothing in this section shall impose liability upon a public entity that makes loans or grants available through a competitive application process, for the failure of an awardee to meet its contractual obligations.

(i) This section shall remain in effect only until January 1, 2020, and as of that date is

FOR COUNCIL ONLY NOT FOR CONSTRUCTION

repealed, unless a later enacted statute, that is enacted before January 1, 2020, deletes or extends that date.

SECTION 2.
The Legislature finds and declares that it is of statewide concern to require a charter city, charter county, or charter city and county to follow a prescribed claims resolution process to ensure there are uniform and equitable procurement practices.

SECTION 3.
If the Commission on State Mandates determines that this act contains costs mandated by the state, reimbursement to local agencies and school districts for those costs shall be made pursuant to Part 7 (commencing with Section 17500) of Division 4 of Title 2 of the Government Code.

FOR COUNCIL ONLY NOT FOR CONSTRUCTION

APPENDIX A - SOIL REPORT

FOR COUNCIL ONLY NOT FOR CONSTRUCTION

Sunland Analytical
11419 Sunrise Gold Circle, #10
Rancho Cordova, CA 95742
(916) 852-8557

Date Reported 01/30/2026
Date Submitted 01/27/2026

To: Joel DeJong
City Of Roseville
311 Vernon St.
Roseville,CA 95678

From: Gene Oliphant, Ph.D. \
General Manager \

The reported analysis was requested for the following:
Location : PARK SITE JM-51 Site ID : JM-51.
Thank you for your business.

* For future reference to this analysis please use SUN # 97375-198896.

SOIL ANALYSIS

Saturation Percent (SP)	50		Soil Texture Loam
pH	7.00		
E.C.	0.40	mmho/cm	
Tot.Dissolved Salts	256	ppm	
Infiltration Rate (0% Slope)	0.54	in/hr	
% Organic Matter	3.3		
C.E.C.	17.8	meq/100g	
Sodium Absorption Ratio (SAR)	1.4		
Exchangable Sodium Percent (ESP)	0.7		
Gypsum Req. (CaSO4*2H2O)	None Required		
est. Nitrogen Release	1.3	#/1000 sq.ft.	

Nitrate	5.35	ppm	**
Phosphorus	19.80	ppm	**********
Potassium	102.80	ppm	**********
Sulfur	5.90	ppm	********
Chloride	25.59	ppm	**********
Carbonates	80.14	ppm	**********
Sodium	30.51	ppm	
Calcium	2375.12	ppm	**********
Magnesium	674.76	ppm	**********
Boron	0.01	ppm	
Copper	0.34	ppm	***
Iron	9.84	ppm	**********
Manganese	6.06	ppm	**********
Zinc	0.12	ppm	*****

Very Low	Low	Adequate	Excessive

FOR COUNCIL ONLY NOT FOR CONSTRUCTION

Sunland Analytical
11419 Sunrise Gold Circle, #10
Rancho Cordova, CA 95742
(916) 852-8557

DATE 01/30/2026
SUN NUMBER 198896

Information requested by:
Joel DeJong
City Of Roseville

Information for:
PARK SITE JM-51
Sample ID: JM-51

SOIL RECOMMENDATIONS FOR LANDSCAPE GARDENING

SOIL pH (Acidity and Alkalinity)

The pH of this sample indicates the soil is in a range for normal growth of most plants. No modification is required.

DISSOLVED SALTS (Indicated by E.C. & TDS)

These conditions are in the normal range for plant growth.

SOIL TEXTURE AND RATE OF WATER INFILTRATION

The infiltration rate for all soil textures decreases with increasing ground slope. At 0 to 4%, 5 to 8%, 9 to 12%, 13 to 16% and above 16% the infiltration rate of this sample decreases from 0.54 to 0.43, 0.32, 0.22, 0.14, respectively. Infiltration rate also decreases with percent of ground cover and by compaction.

WATER PENETRATION OF SOIL DUE TO CHEMICAL CHARACTERISTICS

When exchangable Sodium increases in the soil, water penetration decreases. Based on SAR and ESP values this sample has no penetration problem due to soil Sodium. No Gypsum required.

ORGANIC MATTER

Organic matter provides a slow nitrogen release and aids water retention. This sample has a moderate Organic Matter content.
To maintain moisture and provide sustained nitrogen release a level of 10% organic matter is recommended. This can be accomplished by adding 3 yards per 1000 sq.ft. of ground fir bark that is approximately 75% organic matter (i.e. typically found in ground fir bark which also has naturally low salt and boron concentrations). In California, the MWELO ordenance requires a fixed application of four yards of COMPOST if the soil organic matter is less than 6%. However, of significant concern when applying COMPOST is the potential for the compost to have high salt, high boron content, high C to N ratio and having a higly variable pH (very high to very low). All of these COMPOST characteristics can have very negative affect on plant growth. Take care by having the compost analyzed or by seeing a recent analysis of the compost to be used.

FOR COUNCIL ONLY NOT FOR CONSTRUCTION

Sunland Analytical
11419 Sunrise Gold Circle, #10
Rancho Cordova, CA 95742
(916) 852-8557

DATE 01/30/2026
SUN NUMBER 198896

Information requested by:
Joel DeJong
City Of Roseville

Information for:
PARK SITE JM-51
Sample ID: JM-51

SOIL RECOMMENDATIONS FOR LANDSCAPE GARDENING

SOIL BORON

Boron concentration is below adequate level. Apply 0.5 (1/2) oz./1000 sq.ft. of boric acid. Dissolve in 2 gallons of water and apply by spraying. Apply carefully because excess boron is toxic to plants !!

SOIL MICRONUTRIENTS

Micronutrients, Copper, Iron, Manganese and Zinc, in soil are present in small amounts. However, they play a necessary role in plant metabolism. Without appropriate amounts plants will not thrive. Apply the following per 1000/ sq.ft. Do not mix micronutrients during application (use a separate application for each element indicated). Apply 10 # of ironite or similar product and water well.

Because copper, manganese and zinc are in very small amounts, dissolve (each) in 2 gallons of water and use a sprayer to obtain an even application. Apply 0.2 # Copper Sulfate, 0.5 # Zinc Sulfate and water.

SOIL MACRONUTRIENTS : NITROGEN-PHOSPHORUS-POTASSIUM (N-P-K)

GENERAL N-P-K RECOMMENDATION

Use ONE of these NPK preparations for the first fertilizer application.

Standard NPK Fertilizer Preparations	6-24-24	5-20-10	16-16-16	0-10-10	28-3-4	21-0-0	Customer Choice None
#/1000 sq.ft.	17	20	7	N/A	N/A	N/A	**

GRASS OR SOD PREPARATION

Till in organic matter, N,P,K and micro nutrients in addition to any lime gypsum or sulfur as directed above. Smooth soil surface and follow seed or sod producers direction for moisture and product application.

TREES AND SHRUBS

Excavate holes for planting shrubs and trees to at least twice the volume of the container. Prepare backfill for tree and shrub planting holes by mixing three parts of native soil (or imported top soil) with one part organic amendment (preferably nitrogen and iron fortified) and 2.5 pounds of 6-24-24 per yard of mix. For extended fertilization, place slow release fertilizer tablets in each hole per manufacturer's instructions. If 6-24-24 was not directly added to backfill mix, during backfill apply uniformly 1/2 oz of 6-24-24 per gallon containers, 2.5 oz per 5 gallons, 6 oz per 24 inch boxes.

FOR COUNCIL ONLY NOT FOR CONSTRUCTION

Sunland Analytical
11419 Sunrise Gold Circle, #10
Rancho Cordova, CA 95742
(916) 852-8557

DATE 01/30/2026
SUN NUMBER 198896

Information requested by:
Joel DeJong
City Of Roseville

Information for:
PARK SITE JM-51
Sample ID: JM-51

SOIL RECOMMENDATIONS FOR LANDSCAPE GARDENING

Summary and Suggested Sequence of Soil Improvements (#/1000 Sq.Ft.)

Organic Amendment	3	Yd./1000 Sq.Ft.	Bulk organic amendment (nitrified). or in Calif. if Org.Mat. less than 6% use 4 yd compost.
N-P-K Fertilizer	See above chart		
Micro Nutrients			
Copper	0.2	#	Copper sulfate
Iron	10	#	Ironite or similar product
Zinc	0.5	#	Zinc Sulfate
Boron	0.5	oz	Boric Acid - excess TOXIC !!!
Sulfate-Sulfur	2	#	Ammonium Sulfate

Maintenance Fertilization

Apply 5 pounds of Ammonium sulfate (21-0-0) per 1000 sq.ft.every month until plants become established. After established, apply 28-3-4 (or similar preparation) to provide desired growth rate and color.

FOR COUNCIL ONLY NOT FOR CONSTRUCTION

FUHRMAN LEAMY LAND GROUP HEREBY EXPRESSLY RESERVES ITS COMMON LAW COPYRIGHT AND OTHER PROPERTY RIGHTS IN THESE PLANS. THESE PLANS AND DRAWINGS ARE NOT TO BE REPRODUCED, CHANGED OR COPIED IN ANY FORM OR MANNER WHATSOEVER WITHOUT FIRST OBTAINING THE EXPRESS WRITTEN PERMISSION OF FUHRMAN LEAMY LAND GROUP NOR ARE THEY TO BE ASSIGNED TO ANY THIRD PARTY WITHOUT FIRST OBTAINING WRITTEN PERMISSION AND CONSENT.

CWJ# - 500290
EN# - 25-0591

CITY OF ROSEVILLE CALIFORNIA

PARKS, RECREATION & LIBRARIES DEPARTMENT

BENCHMARK ELEV. 120.15 (NGVD 88)

CITY B.M. 126 (Roseville)

BENCKMARK DESCRIPTION: 3 ¼" BRASS DISC STAMPED 2018 PLS 8278, LOCATED AT THE NORTHEAST CORNER OF THE INTERSECTION OF FIDDYMENT ROAD AND WESTLAKE DRIVE ON THE TOP OF CURB AT NORTH CURB RETURN.

FOR BUILDING DEPARTMENT REVIEW:

SITE ACCESSIBILITY:	SA-1.0
SHADE STRUCTURE:	LC-2.1
ELECTRICAL:	E0.1, E0.2, E0.3, E1.0, E2.0 & E2.1

SITE MAP

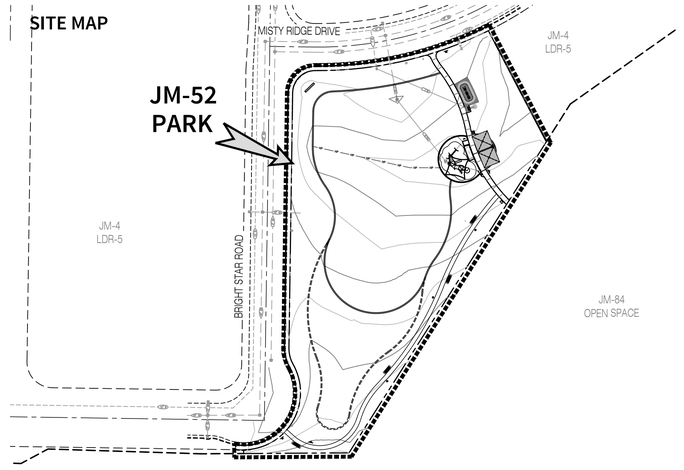

MODEL CODES

ALL WORK SHALL CONFORM TO THE FOLLOWING MODEL CODES:

2022 CALIFORNIA BUILDING CODE WITH CITY OF ROSEVILLE AMENDMENTS (CBC) ,

2022 CALIFORNIA GREEN BUILDING STANDARDS CODE (CGBSC),

2022 CALIFORNIA MECHANICAL CODE (CMC),

2022 CALIFORNIA PLUMBING CODE (CPC),

2022 CALIFORNIA ELECTRICAL CODE WITH CITY AMENDMENTS (CEC),

2022 CALIFORNIA ENERGY CODE (CEC PART 6),

2022 CALIFORNIA FIRE CODE WITH CITY OF ROSEVILLE AMENDMENTS (RFC).

SPECIAL INSPECTIONS

1704.3.3 -	HIGH STRENGTH BOLTING PER REQUIREMENTS ON SHEET 2 OF SHADE STRUCTURE DRAWINGS.
1704.4 -	CONCRETE CONSTRUCTION PER REQUIREMENTS ON SHEET 3 OF SHADE STRUCTURE DRAWINGS.

BUILDING CLASSIFICATION

A.	OCCUPANCY GROUP:	U
B.	TYPE OF CONSTRUCTION:	V-B NON SPRINKLED
C.	FLOOR AREA (S.F.):	528 S.F.
D.	NUMBER OF STORIES:	1
E.	TOTAL OCCUPANT LOAD:	N/A

HOURS OF CONSTRUCTION

IN ACCORDANCE WITH THE CITY'S NOISE ORDINANCE, THE HOURS OF PROJECT CONSTRUCTION SHALL BE LIMITED TO THE FOLLOWING:
7:00 A.M. TO 7:00 P.M. (MONDAY THRU FRIDAY)
8:00 A.M. TO 8:00 P.M. (SATURDAY , SUNDAY & HOLIDAYS)

NOTE:

IT IS THE RESPONSIBILITY OF THE CONTRACTOR TO PROVIDE ALL MATERIALS AND WORK AS DETAILED IN THE CITY OF ROSEVILLE PARKS CONSTRUCTION STANDARDS - JULY 2025 OR LATEST EDITION AND THE CITY OF ROSEVILLE DESIGN & CONSTRUCTION STANDARDS - JANUARY 2013 WITH 2021 AMENDMENTS OR LATEST EDITION. CONTRACTOR SHALL PROVIDE SUBMITTALS BASED ON THE PROVIDED DRAWINGS AND ALL REQUIREMENTS IN THE ABOVE MENTIONED GUIDELINES.

STATE WATER RESOURCES CONTROL BOARD W.D.I.D. IDENTIFICATION NO.:

5S31C40xxxx

MS4 PERMIT INFORMATION

ANTICIPATED START DATE:	MARCH 2026
ANTICIPATED COMPLETION DATE:	AUGUST 2026
PARCEL SIZE:	1.5 AC
ESTIMATED DISTRIBUTION OF SOIL:	1.5 AC
NEAREST CREEK:	UNNAMED TRIBUTARY 400' SOUTHEAST

VICINITY MAP

N.T.S.

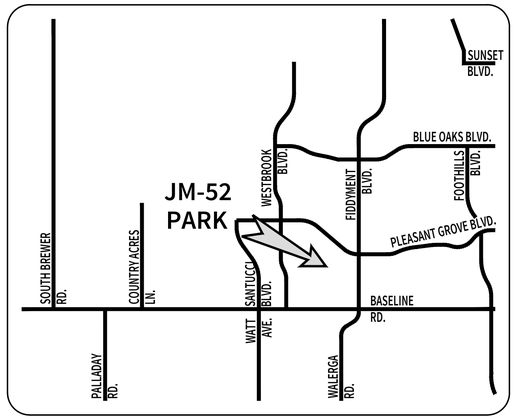

CONSULTANTS/SUB-CONSULTANTS

CIVIL ENGINEERING:	TSD ENGINEERING DANA MOORE 916.608.0707 x104
ELECTRICAL ENGINEERING:	CAPITAL ENGINEERING NATHAN HEARN 916.851.3568

CITY OF ROSEVILLE GENERAL NOTES:

1. ALL CONSTRUCTION AND MATERIALS SHALL CONFORM TO THESE PLANS AND THE LATEST EDITION AND AMENDMENTS OF THE CITY OF ROSEVILLE DESIGN AND CONSTRUCTION STANDARDS.
2. THE CITY OF ROSEVILLE IS A MEMBER OF THE UNDERGROUND SERVICE ALERT (U.S.A.) ONE-CALL SYSTEM. THE CONTRACTORS SHALL NOTIFY THE U.S.A. CENTER 48 HOURS IN ADVANCE OF PERFORMING ANY EXCAVATION WORK BY CALLING 1-800-227-2600.
3. THE CONTRACTOR SHALL MARK IN WHITE PAINT ALL AREAS TO BE EXCAVATED PRIOR TO CONTACTING U.S.A. ANY AREAS NOT MARKED WILL NOT BE SUBJECT TO U.S.A., AND THE CONTRACTOR SHALL BE RESPONSIBLE FOR ANY DAMAGE RESULTING FROM EXCAVATION.
4. THE CONTRACTOR SHALL EXPOSE AND VERIFY LOCATIONS AND ELEVATIONS OF EXISTING UNDERGROUND UTILITIES PRIOR TO CONSTRUCTION OF THE NEW IMPROVEMENTS CONNECTING TO OR IN THE VICINITY OF THE SAME.
5. THE CONTRACTOR SHALL BE RESPONSIBLE FOR THE PROTECTION OF ALL EXISTING MONUMENTS AND OTHER SURVEY MARKERS ON THE JOB SITE.
6. THE CONTRACTOR SHALL PLACE BOXED SURVEY MONUMENTS WITH 1-1/2" BRONZE HEAD SET IN CONCRETE (STD. DWG. ST-36) AT LOCATIONS SHOWN ON THESE PLANS.
7. A.C. SURFACE SHALL BE CUT TO A NEAT, STRAIGHT LINE PARALLEL WITH THE STREET CENTERLINE AND THE EXPOSED EDGE SHALL BE TACKED WITH EMULSION PRIOR TO PAVING. THE EXPOSED BASE MATERIAL SHALL BE GRADED, RE-COMPACTED, AND RESEALED PRIOR TO PAVING.
8. ANY EXISTING CONCRETE SURFACE TO BE REMOVED SHALL BE SAW CUT TO A NEAT, STRAIGHT LINE.
9. THE CONTRACTOR SHALL SUBMIT A TRAFFIC CONTROL PLAN THAT SHALL BE ACCEPTED BY THE ENGINEERING DIVISION OF PUBLIC WORKS BEFORE START OF WORK IN RIGHT-OF-WAY AND SHALL BE IN ACCORDANCE WITH CALIFORNIA MUTCD LATEST EDITION. AT LEAST ONE LANE IN EACH DIRECTION SHALL REMAIN OPEN TO TRAFFIC UNLESS OTHERWISE SHOWN ON THE PLANS. TRAFFIC CONTROL HOURS ARE SUBJECT TO LIMITATION BY THE CITY. TRAFFIC CONTROL WITH LANE CLOSURES THAT AFFECT TRAFFIC FLOW MAY REQUIRE NIGHT WORK. IF, AS A PART OF TRAFFIC CONTROL MEASURES, A ROADWAY CLOSURE HAS BEEN APPROVED, THE CONTRACTOR SHALL NOTIFY DEVELOPMENT SERVICES CONSTRUCTION INSPECTOR 72 HOURS IN ADVANCE OF SETTING UP THIS CLOSURE.
10. CURB RAMPS CONFORMING TO ALL ADA AND TITLE 24 REQUIREMENTS SHALL BE PLACED AT ALL NEW STANDARD CURB RETURNS (STANDARD DRAWING ST-27) AND STANDARD TYPE A-7 DRIVEWAYS. WHERE EXISTING RAMPS DO NOT MEET CURRENT ADA AND TITLE 24 REQUIREMENTS, THE RAMPS SHALL BE UPGRADED IN CONFORMANCE WITH MINIMUM TITLE 24 REQUIREMENTS. WHERE EXISTING RAMPS DO NOT INCLUDE DETECTABLE WARNING PANELS (TRUNCATED DOMES), PANELS SHALL BE RETROFITTED PER THE CONSTRUCTION STANDARDS.
11. DRAIN INLETS NOT WITHIN A PAVED AREA SHALL HAVE A 12" WIDE COLLAR OF 6" THICK P.C.C. OR 2" THICK A.C.
12. PRIOR TO THE CERTIFICATE OF COMPLETION ON ALL SINGLE-FAMILY RESIDENTIAL SUBDIVISIONS, THE DEVELOPER SHALL SUBMIT A LETTER FROM THE POST OFFICE STATING THAT ITS REQUIREMENTS FOR MAILBOX CLUSTER PADS HAVE BEEN SATISFIED.
13. ALL UNDERGROUND UTILITIES WITHIN EXISTING OR PROPOSED CITY OF ROSEVILLE EASEMENTS SHALL REQUIRE A MINIMUM OF 90% COMPACTION ON THE TRENCH BACKFILL. COMPACTION OF BACKFILL BY JETTING IS NOT PERMITTED IN CITY OF ROSEVILLE RIGHT OF WAY AND EASEMENT AREAS OR WITHIN DEDICATED RECLAIMED WATER, STORM, SEWER OR WATER EASEMENTS AND MAINS.
14. THE CONTRACTOR SHALL CONDUCT A PRE-CONSTRUCTION MEETING ONE-WEEK PRIOR TO STARTING WORK. MEMBERS OF THE CITY OF ROSEVILLE DEVELOPMENT SERVICES DEPARTMENT, ENVIRONMENTAL UTILITIES DEPARTMENT AND ALL OTHER UTILITY REPRESENTATIVES SHALL BE NOTIFIED BY THE CONTRACTOR AS TO THE DATE AND LOCATION OF THE MEETING.
15. PRIOR TO EXCAVATION OF TRENCHES 5 FEET OR DEEPER, THE CONTRACTOR SHALL SUBMIT TO THE DEVELOPMENT SERVICES DEPARTMENT OR ENVIRONMENTAL UTILITIES DEPARTMENT INSPECTOR A COPY OF THE COMPANY'S ANNUAL CALOSHA TRENCHING PERMIT AND A COPY OF THE COMPANY'S LETTER INFORMING CALOSHA OF THE TIME THE TRENCHING IS COMMENCING AND THE LOCATION OF THE WORK.
16. ALL PAINTED TRAFFIC STRIPES, ARROWS, AND PAVEMENT MARKINGS SHALL BE CONSTRUCTED WITH THERMOPLASTIC MATERIAL TO THE SPECIFICATIONS SET FORTH IN CHAPTER 3 OF THE CALIFORNIA MUTCD LATEST EDITION. NON-REFLECTIVE PAVEMENT MARKERS SHALL CONSIST OF CERAMIC MARKERS ONLY CONFORMING TO CHAPTER 3 OF THE CALIFORNIA MUTCD LATEST EDITION.
17. THE DEVELOPERS CONTRACTOR SHALL TAKE EXTREME CARE TO PROTECT EXISTING SITE AND ADJACENT IMPROVEMENTS FROM DAMAGE. THE CONTRACTOR SHALL BE RESPONSIBLE TO REPAIR OR MAKE REPLACEMENT OF ALL CRACKED AND OTHERWISE PRE-EXISTING DAMAGED PUBLIC IMPROVEMENTS ALONG THE FRONTAGE OF THE PROJECT SITE AND ANY DAMAGE RESULTING FROM CONSTRUCTION TO CURRENT CITY STANDARDS AND AT THEIR OWN EXPENSE. THE EXTENT OF THE REPAIRS SHALL BE DETERMINED BY THE DEVELOPMENT SERVICES CONSTRUCTION INSPECTOR AND SHALL BE COMPLETED PRIOR TO THE CITY ACCEPTANCE OF THE IMPROVEMENTS.
18. WHERE COMBINATIONS OF SIDEWALK OR CURB AND GUTTER ARE PLACED CONTIGUOUS TO EXISTING, ALL ADJOINING EXISTING CONCRETE VERTICAL FACES SHALL BE DOWELED. ALL ABUTTING SIDEWALK ENDS SHALL BE DOWELED MID-SECTION VERTICALLY WITH TWO DOWELS FOR FOUR THROUGH SIX-FOOT WIDE SIDEWALK AND THREE DOWELS FOR WIDER SIDEWALK. ABUTTING CURB AND GUTTER ENDS SHALL BE DOWELED TWICE. 18 INCHES APART AT GUTTER PAN MID-SECTION. DOWEL CONNECTIONS OF LONGITUDINAL RUNS OF SIDEWALK TO BACK OF CURB SHALL BE THREE FEET ON CENTER. ALL DOWELS SHALL BE 16 INCHES LONG, GRADE 60; #4 REBAR PENETRATING FOUR INCHES. THE DOWEL HOLE SHALL BE 5/8-INCH DIAMETER AT A SLIGHT HORIZONTAL ANGLE FROM PERPENDICULAR. THE PENETRATING PORTION OF THE DOWEL AND THE ENTIRE (CLEANED) VERTICAL SURFACE OF THE ADJOINING, EXISTING CONCRETE SHALL BE THOROUGHLY COATED WITH STATE STANDARD TWO-PART EPOXY.
19. WHEN SAWCUTTING WITHIN THE STREET FOR TRENCHING OR OTHER PURPOSES, CONTRACTOR SHALL GRIND 1½" OF PAVEMENT BETWEEN THE LANE LINES (FROM LANE STRIPE TO LANE STRIPE) UPON COMPLETION OF THE SAWCUTTING AND OR TRENCHING WORK. WHERE THE SAWCUTTING OCCURS BETWEEN THE CURB AND GUTTER AND NEAREST LANE STRIPE (INCLUDING BIKE LANES), THE SAME 1 ½" GRIND SHALL BE REQUIRED. CONTRACTOR TO PLACE A PETROMAT FABRIC OR APPROVED EQUAL BY THE CITY OF ROSEVILLE AND OVERLAY FROM LANE STRIPE TO LANE STRIPE, OR CURB TO LANE STRIPE AND RESTRIPE OR REPLACE ANY DELINEATORS REMOVED DURING THE GRIND.
20. ALL PUBLICLY MAINTAINED STORM DRAIN ON PRIVATE PROPERTY SHALL BE A MINIMUM OF 12 INCHES IN DIAMETER AND SHALL BE RCP CL IV, UNLESS OTHERWISE APPROVED BY THE CITY ENGINEER.
21. FOR RESIDENTIAL SUBDIVISIONS, UNLESS OTHERWISE APPROVED BY DEVELOPMENT SERVICES ENGINEERING, THE FINAL GRADING OF THE PROJECT SITE SHALL BE CONSTRUCTED TO ACCOMMODATE A MAXIMUM DRIVEWAY SLOPE OF 14% FOR EACH RESIDENTIAL LOT, AS MEASURED FROM THE BACK OF THE SIDEWALK TO THE GARAGE (20-FT SET BACK). IT WILL REMAIN THE RESPONSIBILITY OF THE BUILDERS/DEVELOPER TO DESIGN A HOUSE THAT PROVIDES SUITABLE ACCESS TO THE PARCEL.
22. THE CONTRACTOR SHALL PLACE FILTER FABRIC BETWEEN THE INITIAL BEDDING AND BACKFILL AND THE TRENCH BACKFILL FOR SANITARY SEWERS DEPTH GREATER THAN 15 FEET MEASURED TO THE PIPE INVERT.

CITY OF ROSEVILLE FIRE DEPARTMENT GENERAL NOTES:

REF: CFC APPENDIX CHAPTER 1 SECTION 105.4.2 & SECTION 105.4.7 AS AMENDED BY CITY OF ROSEVILLE.

1. PRIOR TO COMBUSTIBLE MATERIALS BEING BROUGHT TO THE SITE, FIRE APPARATUS ACCESS ROADS SHALL BE PROVIDED TO WITHIN 150 FEET OF ALL PORTIONS OF THE EXTERIOR WALLS OF THE FIRST STORY OF ANY STRUCTURES AND COMBUSTIBLE STORAGE PILES. FIRE APPARATUS ACCESS ROADS SHALL BE FULLY PAVED AND SHALL BE DESIGNED TO SUPPORT THE IMPOSED WEIGHT OF A FIRE APPARATUS (34 TONS GVW). ACCESS ROADS SHALL BE PROVIDED WITH A MINIMUM 20-FOOT ROADWAY WIDTH AND 13 FOOT 6-INCH VERTICAL CLEARANCE.
2. CONSTRUCT/ON MATERIAL AND VEHICLES SHALL NOT OBSTRUCT FIRE APPARATUS ACCESS TO FIRE APPARATUS ROADS, FIRE HYDRANTS OR THE BUILDING.
3. TEMPORARY ABOVE GROUND FUEL STORAGE TANKS MAY BE USED ON CONSTRUCTION SITES FOR DIESEL FUEL ONLY AND SHALL NOT EXCEED 1, 000-GALLON LIQUID CAPACITY. SUCH INSTALLATIONS SHALL COMPLY WITH ALL APPLICABLE PROVISIONS OF THE CITY FIRE CODE. A FIRE DEPARTMENT PERMIT SHALL BE OBTAINED PRIOR TO THE PLACEMENT OF SUCH TANKS ON THE SITE.
4. THE STREET ADDRESS OF THE CONSTRUCTION SITE SHALL BE CLEARLY IDENTIFIED AT ALL ENTRANCES INTO THE PROJECT. SUCH NUMBERS SHALL BE CLEARLY VISIBLE FROM THE STREET FRONTING THE PROPERTY AND SHALL CONTRAST IN COLOR WITH THEIR BACKGROUND (MINIMUM 6-INCH LETTERING).
5. FIRE SAFETY DURING CONSTRUCT/ON. CHAPTER 33 OF THE CALIFORNIA FIRE CODE REQUIRES CERTAIN SAFETY PROCEDURES TO BE FOLLOWED DURING NEW CONSTRUCT/ON AND REMODELS. THIS ARTICLE CONCERNS FIRE SAFETY IN THE FOLLOWING AREAS: ACCESS, WATER SUPPLY, EXTINGUISHERS, STANDPIPES, DEBRIS, MOTORIZED EQUIPMENT, HEATING DEVICES, SMOKING, CUTTING AND WELDING, FLAME PRODUCING EQUIPMENT, FLAMMABLE LIQUIDS, ASPHALT AND TAR KETTLES, TEMPORARY WIRING, EMERGENCY TELEPHONE MODIFICATION OF EXISTING SYSTEMS, EXITS, BURNING OF ANY MATERIAL, AND FIRE WATCH. IT IS YOUR RESPONSIBILITY TO BECOME FAMILIAR WITH THESE REQUIREMENTS AND SEE THAT ALL PERSONS ON THE JOB SITE COMPLY.
6. THE BURNING OF COMBUSTIBLE CONSTRUCTION MATERIAL AND TRASH IS PROHIBITED.
7. A MINIMUM 3-FOOT CLEAR SPACE SHALL BE PROVIDED AND MAINTAINED AROUND FIRE PROTECTION EQUIPMENT.
8. AT ALL FIRE HYDRANT LOCATIONS, A BLUE REFLECTIVE PAVEMENT MARKER SHALL BE INSTALLED ONE FOOT OFF PAVED CENTERLINE OR MEDIAN ON THE HYDRANT SIDE OF THE ROADWAY.
9. IF SITE SURVEY OR EARTH MOVING WORK RESULTS IN THE DISCOVERY OF HAZARDOUS MATERIALS IN CONTAINERS, OR WHAT APPEARS TO BE HAZARDOUS WASTES RELEASED INTO THE GROUND, THE CONTRACTOR OR APPLICANT SHALL IMMEDIATELY REPORT THE FINDING TO THE ROSEVILLE FIRE DEPARTMENT VIA PHONE AT (916) 774-5800. ALL SUSPECTED AREAS SHALL BE MARKED OFF WITH APPROVED SIGNAGE OR CAUTION TAPE UNTIL SUCH TIME THAT A REPRESENTATIVE FROM THE FIRE DEPARTMENT DETERMINES WHETHER THE RELEASE IS REPORTABLE OR NOT AND IF SITE REMEDIATION IS REQUIRED.
10. THE REQUIRED MINIMUM FIRE FLOW FOR THE PROTECTION OF THE PROPOSED PROJECT IS 1,500 GALLONS PER MINUTE WITH 20 POUNDS PER SQUARE INCH RESIDUAL WATER PRESSURE REMAINING IN THE SYSTEM.
11. FIRE HYDRANTS SHALL BE INSTALLED AND IN SERVICE CAPABLE OF PROVIDING THE REQUIRED FIRE FLOW PRIOR TO ANY COMBUSTIBLE CONSTRUCTION OR ON-SITE STORAGE OF COMBUSTIBLE MATERIALS.
12. ALL FIRE HYDRANTS SHALL BE "BAGGED" OR OUT-OF-SERVICE UNTIL THE ABOVE FOUR (4) INSPECTIONS ARE COMPLETED.
13. WATER SUPPLY CONTROL VALVES SHALL NOT BE CLOSED BY THE CONTRACTOR UPON ACCEPTANCE OF THE FIRE-FLOW TEST BY THE FIRE DEPARTMENT, UNLESS ENVIRONMENTAL UTILITIES AND THE FIRE DEPARTMENT ARE CONTACTED AND ADVISED OF THE CLOSURE.
14. TESTING OF ALL FIRE SYSTEMS SHALL BE PERFORMED PRIOR TO THE SALES OFFICE CAN BE OPENED FOR BUSINESS.
15. FRAMING CONSTRUCTION CANNOT COMMERCE UNTIL ACCESS ROADS AND PUBLIC FIRE HYDRANTS ARE APPROVED BY THE FIRE DEPARTMENT.
16. IF THIS PROJECT WILL BE PHASED, THE FIRE DEPARTMENT REQUIREMENTS FOR ACCESS AND CIRCULATION THROUGHOUT SHALL BE APPROVED BY THE CITY FOR SUCH PROPOSAL. ACCESS ROAD SHALL COMPLY IN ACCORDANCE WITH THE CALIFORNIA FIRE CODE AND THE CITY OF ROSEVILLE'S AMENDMENTS. A SEPARATE PHASING PLAN SHALL BE REVIEWED AND APPROVED BY THIS DEPARTMENT.

FOR COUNCIL ONLY
NOT FOR CONSTRUCTION

JM-52 PARK

PREPARED FOR:
TARA GEE
CITY OF ROSEVILLE - PARKS, RECREATION & LIBRARIES DEPARTMENT
316 VERNON STREET, SUITE 400 ROSEVILLE, CA 95678
916.774.5253

SHEET INDEX

CV-1.0	COVER SHEET	1
CV-2.0A	CAL GREEN DOCUMENTATION	2
CV-2.0B	CAL GREEN DOCUMENTATION	3
CV-2.0C	CAL GREEN DOCUMENTATION	4
SA-1.0	SITE ACCESSIBILITY PLAN	5
SW-1.0	SCOPE OF WORK PLAN	6
LC-1.0	LANDSCAPE CONSTRUCTION PLAN & KEYNOTES	7
LC-2.0	LANDSCAPE CONSTRUCTION DETAILS	8
SS-1	SHADE STRUCTURE ENGINEERING: NOTES/LOM	9
SS-2	SHADE STRUCTURE ENGINEERING: VIEWS AND DETAILS	10
SS-3	SHADE STRUCTURE ENGINEERING: FOOTING DETAILS	11
C1.0	GRADING & DRAINAGE PLAN	12
C1.1	GRADING DETAILS & SECTIONS	13
C1.2	DRAINAGE DETAILS - CITY	14
C2.0	EROSION CONTROL PLAN	15
LL-1.0	LANDSCAPE LAYOUT PLAN & NOTES	16
LI-1.0	LANDSCAPE IRRIGATION PLAN & LEGEND	17
LI-1.1	LANDSCAPE IRRIGATION PLAN - MAINLINE LAYOUT	18
LI-2.0	LANDSCAPE IRRIGATION NOTES	19
LI-2.1	MWELO DOCUMENTATION	20
LI-2.2	LANDSCAPE IRRIGATION DETAILS	21
LI-2.3	LANDSCAPE IRRIGATION DETAILS	22
LP-1.0	LANDSCAPE PLANTING PLAN & LEGEND	23
LP-2.0	LANDSCAPE PLANTING NOTES & DETAILS	24
E0.1	ELECTRICAL COVER SHEET	25
E0.2	SERVICE PEDESTAL ONE-LINE DIAGRAM & ELEVATION, FEEDER SCHEDULE AND LOAD CALCULATIONS	26
E0.3	TITLE 24 LTO FORMS	27
E1.0	ELECTRICAL SITE PLAN	28
E2.0	ELECTRICAL DETAILS	29
E2.1	ELECTRICAL DETAILS	30
	TOTAL SHEETS	30

CITY OF ROSEVILLE DEVELOPMENT SERVICES DEPARTMENT

CITY ENGINEER DATE

UTILITY REPRESENTATIVES

UTILITY	COMPANY	CONTACT	PHONE
U.S.A.	-	-	1.800.642.2444
GAS	PG&E	JEANETTE JOHNSON	530.883.3147
ELECTRICITY	ROSEVILLE ELECTRIC	KEITH LITTS	916.580.9405
TELEPHONE	ROSEVILLE TELEPHONE	GEORGE DEMPSEY	916.786.4351
WATER	CITY OF ROSEVILLE	ENVIRONMENTAL UTILITIES	916.774.5750
SEWER	CITY OF ROSEVILLE	ENVIRONMENTAL UTILITIES	916.774.5750
DRAINAGE	DEVELOPMENT SERVICES ENGINEERING	ENGINEERING	916.774.5339
T.V. CABLE	COMCAST	KATHY DEAN	916.786.8443
FIRE	CITY OF ROSEVILLE	MICHAEL BRADLEY	916.774.5800

FUHRMAN LEAMY LAND GROUP
DESIGN • SERVICE • SOLUTIONS
3400 DOUGLAS BLVD, SUITE 275
ROSEVILLE, CALIFORNIA 95661
916.783.5263 • FLLANDGROUP.COM

JOB NO. : CRV: 25027

CITY OF ROSEVILLE APPROVAL

PROJECT:
JM-52 PARK

5097 MISTY RIDGE DRIVE
ROSEVILLE, CA

CLIENT:
CITY OF ROSEVILLE

REVISIONS	DATE
1	
2	
3	
4	
5	

ISSUE		DATE
1	1ST SUBMITTAL	9.05.2025
2	2ND SUBMITTAL	10.08.2025
3	3RD SUBMITTAL	11.21.2025
4	4TH SUBMITTAL	1.28.2026
5		

REGISTERED LANDSCAPE ARCHITECT
KEVIN C. LEAMY
No. 4965
12/31/26
RENEWAL DATE
1.15.2026
DATE
STATE OF CALIFORNIA

DRAWN : AM
CHECKED : KCL
SCALE: : AS SHOWN

SHEET TITLE:
COVER SHEET

SHEET
CV-1.0
1 OF 30 SHEETS

FURNISHED BY AIA CONTRACT DOCUMENTS UNDER LICENSE NUMBER 2012-1-1 TO FUHRMAN LEAMY LAND GROUP, INC. ANY UNAUTHORIZED USE IN ANY MANNER WHATSOEVER WITHOUT FIRST OBTAINING THE EXPRESS WRITTEN PERMISSION OF FUHRMAN LEAMY LAND GROUP NOR ARE THEY TO BE ASSIGNED TO ANY THIRD PARTY WITHOUT FIRST OBTAINING WRITTEN PERMISSION AND CONSENT.

AIA California

2022 CALIFORNIA GREEN BUILDING STANDARDS CODE

NONRESIDENTIAL MANDATORY MEASURES, SHEET 1 (January 2023)

Y = YES
N/A = NOT APPLICABLE
RESPON. PARTY = RESPONSIBLE PARTY (ie: ARCHITECT, ENGINEER, OWNER, CONTRACTOR, INSPECTOR ETC.)

Y	N/A	RESPON. PARTY

CHAPTER 3
GREEN BUILDING
SECTION 301 GENERAL

301.1 SCOPE. Buildings shall be designed to include the green building measures specified as mandatory in the application checklists contained in this code. Voluntary green building measures are also included in the application checklists and may be included in the design and construction of structures covered by this code, but are not required unless adopted by a city, county, or city and county as specified in Section 101.7.

301.3 NONRESIDENTIAL ADDITIONS AND ALTERATIONS. [BSC-CG] The provisions of individual sections of Chapter 5 apply to newly constructed buildings, building additions of 1,000 square feet or greater, and/or building alterations with a permit valuation of $200,000 or above (for occupancies within the authority of California Building Standards Commission). Code sections relevant to additions and alterations shall only apply to the portions of the building being added or altered within the scope of the permitted work.

A code section will be designated by a banner to indicate where the code section only applies to newly constructed buildings [N] or to additions and/or alterations [A]. When the code section applies to both, no banner will be used.

301.3.1 Nonresidential additions and alterations that cause updates to plumbing fixtures only:

Note: On and after January 1, 2014, certain commercial real property, as defined in Civil Code Section 1101.3, shall have its noncompliant plumbing fixtures replaced with appropriate water-conserving plumbing fixtures under specific circumstances. See Civil Code Section 1101.1 *et seq.* for definitions, types of commercial real property affected, effective dates, circumstances necessitating replacement of noncompliant plumbing fixtures, and duties and responsibilities for ensuring compliance.

301.3.2 Waste Diversion. The requirements of Section 5.408 shall be required for additions and alterations whenever a permit is required for work.

301.4 PUBLIC SCHOOLS AND COMMUNITY COLLEGES. (see GBSC)
301.5 HEALTH FACILITIES. (see GBSC)

SECTION 302 MIXED OCCUPANCY BUILDINGS

302.1 MIXED OCCUPANCY BUILDINGS. In mixed occupancy buildings, each portion of a building shall comply with the specific green building measures applicable to each specific occupancy.

SECTION 303 PHASED PROJECTS

303.1 PHASED PROJECTS. For shell buildings and others constructed for future tenant improvements, only those code measures relevant to the building components and systems considered to be new construction (or newly constructed) shall apply.

303.1.1 Initial Tenant improvements. The provisions of this code shall apply only to the initial tenant improvements to a project. Subsequent tenant improvements shall comply with the scoping provisions in Section 303.3 non-residential additions and alterations.

ABBREVIATION DEFINITIONS:

HCD	Department of Housing and Community Development
BSC	California Building Standards Commission
DSA-SS	Division of the State Architect, Structural Safety
OSHPD	Office of Statewide Health Planning and Development
LR	Low Rise
HR	High Rise
AA	Additions and Alterations
N	New

CHAPTER 5
NONRESIDENTIAL MANDATORY MEASURES
DIVISION 5.1 PLANNING AND DESIGN

SECTION 5.101 GENERAL
5.101.1 SCOPE
The provisions of this chapter outline planning, design and development methods that include environmentally responsible site selection, building design, building siting and development to protect, restore and enhance the environmental quality of the site and respect the integrity of adjacent properties.

SECTION 5.102 DEFINITIONS
5.102.1 DEFINITIONS
The following terms are defined in Chapter 2 *(and are included here for reference)*

CUTOFF LUMINAIRES. Luminaires whose light distribution is such that the candela per 1000 lamp lumens does not numerically exceed 25 (2.5 percent) at an angle of 90 degrees above nadir, and 100 (10 percent) at a vertical angle of 80 degrees above nadir. This applies to all lateral angles around the luminaire.

LOW-EMITTING AND FUEL EFFICIENT VEHICLES.
Eligible vehicles are limited to the following:

1. Zero emission vehicle (ZEV), enhanced advanced technology PZEV (enhanced AT ZEV) or transitional zero emission vehicles (TZEV) regulated under CCR, Title 13, Section 1962.
2. High-efficiency vehicles, regulated by U.S. EPA, bearing a fuel economy and greenhouse gas rating of 9 oe 10 as regulated under 40 CFR Section 600 Subpart D.

NEIGHBORHOOD ELECTRIC VEHICLE (NEV). A motor vehicle that meets the definition of "low-speed vehicle" either in Section 385.5 of the Vehicle Code or in 49CFR571.500 (as it existed on July 1, 2000), and is certified to zero-emission vehicle standards.

TENANT-OCCUPANTS. Building occupants who inhabit a building during its normal hours of operation as permanent occupants, such as employees, as distinguished from customers and other transient visitors.

VANPOOL VEHICLE. Eligible vehicles are limited to any motor vehicle, other than a motortruck or truck tractor, designed for carrying more than 10 but not more than 15 persons including the driver, which is maintained and used primarily for the nonprofit work-related transportation of adults for the purpose of ridesharing.

Note: Source: Vehicle Code, Division 1, Section 668

ZEV. Any vehicle certified to zero-emission standards.

SECTION 5.106 SITE DEVELOPMENT
5.106.1 STORM WATER POLLUTION PREVENTION FOR PROJECTS THAT DISTURB LESS THAN ONE ACRE OF LAND. Newly constructed projects and additions which disturb less than one acre of land, and are not part of a larger common plan of development or sale, shall prevent the pollution of storm water runoff from the construction activities through one or more of the following measures:

5.106.1.1 Local ordinance. Comply with a lawfully enacted storm water management and/or erosion control ordinance.

5.106.1.2 Best Management Practices (BMPs). Prevent the loss of soil through wind or water erosion by implementing an effective combination of erosion and sediment control and good housekeeping BMPs.

1. Soil loss BMPs that should be considered for implementation as appropriate for each project include, but are not limited to, the following:
   a. Scheduling construction activity during dry weather, when possible.
   b. Preservation of natural features, vegetation, soil, and buffers around surface waters.
   c. Drainage swales or lined ditches to control stormwater flow.
   d. Mulching or hydroseeding to stabilize disturbed soils.
   e. Erosion control to protect slopes.
   f. Protection of storm drain inlets (gravel bags or catch basin inserts).
   g. Perimeter sediment control (perimeter silt fence, fiber rolls).
   h. Sediment trap or sediment basin to retain sediment on site.
   i. Stabilized construction exits.
   j. Wind erosion control.
   k. Other soil loss BMPs acceptable to the enforcing agency.
2. Good housekeeping BMPs to manage construction equipment, materials, non-stormwater discharges and wastes that should be considered for implementation as appropriate for each project include, but are not limited to, the following:
   a. Dewatering activities.
   b. Material handling and waste management.
   c. Building materials stockpile management.
   d. Management of washout areas (concrete, paints, stucco, etc.).
   e. Control of vehicle/equipment fueling to contractor's staging area.
   f. Vehicle and equipment cleaning performed off site.
   g Spill prevention and control.
   h. Other housekeeping BMPs acceptable to the enforcing agency.

5.106.2 STORMWATER POLLUTION PREVENTION FOR PROJECTS THAT DISTURB ONE OR MORE ACRES OF LAND. Comply with all lawfully enacted stormwater discharge regulations for projects that (1) disturb one acre or more of land, or (2) disturb less than one acre of land but are part of a larger common plan of development sale.

Note: Projects that (1) disturb one acre or more of land, or (2) disturb less than one acre of land but are part of the larger common plan of development or sale must comply with the post-construction requirements detailed in the applicable National Pollutant Discharge Elimination System (NPDES) General permit for Stormwater Discharges Associated with Construction and Land Disturbance Activities issued by the State Water Resources Control Board or the Lahontan Regional Water Quality Control Board (for projects in the Lake Tahoe Hydrologic Unit).

The NPDES permits require postconstruction runoff (post-project hydrology) to match the preconstruction runoff (pre-project hydrology) with the installation of postconstruction stormwater management measures. The NPDES permits emphasize runoff reduction through on-site stormwater use, interception, evapotranspiration, and infiltration through nonstructural controls, such as Low Impact Development (LID) practices, and conversation design measures. Stormwater volume that cannot be addressed using nonstructural practices is required to be captured in structural practices and be approved by the enforcing agency.

Refer to the current applicable permits on the State Water Resources Control Board website at: www.waterboards.ca.gov/constructionstormwater. Consideration to the stormwater runoff management measures should be given during the initial design process for appropriate integration into site development.

5.106.4 BICYCLE PARKING. For buildings within the authority of California Building Standards Commission as specified in Section 103, comply with Section 5.106.4.1. For buildings within the authority of the Division of the State Architect pursuant to Section 105, comply with Section 5.106.4.2

5.106.4.1 Bicycle parking. [BSC-CG] Comply with Sections 5.106.4.1.1 and 5.106.4.1.2; or meet the applicable local ordinance, whichever is stricter.

5.106.4.1.1 Short-term bicycle parking. If the new project or an addition or alteration is anticipated to generate visitor traffic, provide permanently anchored bicycle racks within 200 feet of the visitors' entrance, readily visible to passers-by, for 5% of new visitor motorized vehicle parking spaces being added, with a minimum of one two-bike capacity rack.
Exception: Additions or alterations which add nine or less visitor vehicular parking spaces.

5.106.4.1.2 Long-term bicycle parking. For new buildings with tenant spaces that have 10 or more tenant-occupants, provide secure bicycle parking for 5 percent of the tenant-occupant vehicular parking spaces with a minimum of one bicycle parking facility.

5.106.4.1.3 For additions or alterations that add 10 or more tenant-occupant vehicular parking spaces, provide secure bicycle parking for 5 percent of the tenant vehicular parking spaces being added, with a minimum of one bicycle parking facility.

5.106.4.1.4 For new shell buildings in phased projects provide secure bicycle parking for 5 percent of the anticipated tenant-occupant vehicular parking spaces with a minimum of one bicycle parking facility.

5.106.4.1.5 Acceptable bicycle parking facility for Sections 5.106.4.1.2, 5.106.4.1.3, and 5.106.4.1.4 shall be convenient from the street and shall meet one of the following:

1. Covered, lockable enclosures with permanently anchored racks for bicycles;
2. Lockable bicycle rooms with permanently anchored racks; or
3. Lockable, permanently anchored bicycle lockers.

Note: Additional information on recommended bicycle accommodations may be obtained from Sacramento Area Bicycle Advocates.

5.106.4.2 Bicycle parking. [DSA-SS] For public schools and community colleges, comply with Sections 5.106.4.2.1 and 5.106.4.2.2

5.106.4.2.1 Student bicycle parking. Provide permanently anchored bicycle racks conveniently accessed with a minimum of four two-bike capacity racks per new building.
5.106.4.2.2 Staff bicycle parking. Provide permanent, secure bicycle parking conveniently accessed with a minimum of two staff bicycle parking spaces per new building. Acceptable bicycle parking facilities shall be convenient from the street or staff parking area and shall meet one of the following:

1. Covered, lockable enclosures with permanently anchored racks for bicycles;
2. Lockable bicycle rooms with permanently anchored racks; or
3. Lockable, permanently anchored bicycle lockers.

5.106.5.3 Electric vehicle (EV) charging. [N] Construction to provide electric vehicle infrastructure and facilitate electric vehicle charging shall comply with Section 5.106.5.3.1 and shall be provided in accordance with regulations in the California Building Code and the California Electrical Code.

Exceptions:
1. On a case-by-case basis where the local enforcing agency has determined compliance with this section is not feasible based upon one of the following conditions:
   a. Where there is no local utility power supply
   b. Where the local utility is unable to supply adequate power.
   c. Where there is evidence suitable to the local enforcement agency substantiating that additional local utility infrastructure design requirements, directly related to the implementation of Section 5.106.5.3, may adversely impact the construction cost of the project.
2. Parking spaces accessible only by automated mechanical car parking systems are not required to comply with this code section

5.106.5.3.1 EV capable spaces.
[N] EV capable spaces shall be provided in accordance with Table 5.106.5.3.1 and the following requirements:
1. Raceways complying with the California Electrical Code and no less than 1-inch (25 mm) diameter shall be provided and shall originate at a service panel or a subpanel(s) serving the area, and shall terminate in close proximity to the proposed location of the EV capable and into a suitable listed cabinet, box,enclosure or equivalent. A common raceway may be used to serve multiple EV charging spaces.
2. A service panel or subpanel (s) shall be provided with panel space and electrical load capacity for a dedicated 208/240 volt, 40-ampere minimum branch circuit for each EV capable space, with delivery of 30-ampere minimum to an installed EVSE at each EVCS.
3. The electrical system and any on-site distribution transformers shall have sufficient capacity to supply full rated amperage at each EV capable space.
4. The service panel or subpanel circuit directory shall identify the reserved overcurrent protective devices space(s) as "EV CAPABLE". The raceway termination location shall be permanently and visibly marked as "EV CAPABLE."

Note: A parking space served by electric vehicle supply equipment or designed as a future EV charging space shall count as at least one standard automobile parking space only for the purpose of complying with any applicable minimum parking space requirements established by an enforcement agency. See vehicle Code Section 22511.2 for further details.

TABLE 5.106.5.3.1

TOTAL NUMBER OF ACTUAL PARKING SPACES	NUMBER OF REQUIRED EV CAPABLE SPACES	NUMBER OF EVCS (EV CAPABLE SPACES PROVIDED WITH EVSE)^2
0-9	0	0
10-25	2	0
26-50	8	2
51-75	13	3
76-100	17	4
101-150	25	6
151-200	35	9
201 AND OVER	20% of total[1]	25% of EV capable spaces[1]

1. Where there is insufficient electrical supply.
2. The number of required EVCS (EV capable spaces provided with EVSE) in column 3 count towards the total number of required EV capable spaces shown in column 2.

5.106.5.3.2 Electric vehicle charging stations (EVCS)
EV capable spaces shall be provided with EVSE to create EVCS in the number indicated in Table 5.106.5.3.1. The EVCS required by Table 5.106.5.3.1 may be provided with EVSE in any combination of Level 2 and Direct Current Fast Charging (DCFC), except that at least one Level 2 EVSE shall be provided.

One EV charger with multiple connectors capable of charging multiple EVs simultaneously shall be permitted if the electrical load capacity required by Section 5.106.5.3.1 for each EV capable space is accumulatively supplied to the EV charger.

The installation of each DCFC EVSE shall be permitted to reduce the minimum number of required EV capable spaces without EVSE by five and reduce proportionally the required electrical load capacity to the service panel or subpanel.

5.106.5.3.3 Use of automatic load management systems (ALMS).
ALMS shall be permitted for EVCS. When ALMS is installed, the required electrical load capacity specified in Section 5.106.5.3.1 for each EVCS may be reduced when serviced by an EVSE controlled by an ALMS. Each EVSE controlled by an ALMS shall deliver a minimum 30 amperes to an EV when charging one vehicle and shall deliver a minimum 3.3 kW while simultaneously charging multiple EVs.

5.106.5.3.4 Accessible EVCS.
When EVSE is installed, accessible EVSC shall be provided in accordance with the *California Building Code*, Chapter 11B, Section 11B-228.3.
Note: For EVCS signs, refer to Caltrans Traffic Operations Policy Directive 13-01 (Zero Emission Vehicle Signs and Pavement Markings) or its successor(s).

5.106.5.4 Electric Vehicle (EV) charging: medium-duty and heavy-duty. [N]
Construction shall comply with section 5.106.5.4.1 to facilitate future installation of electric vehicle supply equipment (EVSE). Construction for warehouses, grocery stores and retail stores with planned off-street loading spaces shall also comply with Section 5.106.5.4.1 for future installation of medium- and heavy-duty EVSE.
Exceptions:
1. On a case-by-case basis where the local enforcing agency has determined compliance with this section is not feasible based upon one of the following conditions:
   a. Where there is no local utility power supply.
   b. Where the local utility is unable to supply adequate power.
   c. Where there is evidence suitable to the local enforcing agency substantiating that additional local utility infrastructure design requirements, directly related to the implementation of Section 5.106.5.3, may adversely impact the construction cost of the project.

When EVSE(s) is/are installed, it shall be in accordance with the *California Building Code*, the *California Electrical Code* and as follows:

5.106.5.4.1 Electric vehicle charging readiness requirements for warehouse, grocery stores and retail stores with planned off-street loading spaces.
[N] In order to avoid future demolition when adding EV charging supply and distribution equipment, spare raceways(s) or busway(s) and adequate capacity for transformers(s), service panel(s) or subpanel(s) shall be installed at the time of construction in accordance with the California Electrical Code. Construction plans and specifications shall include but are not limited to, the following:
1. The transformer, main service equipment and subpanel shall meet the minimum power requirement in Table 5.106.5.4.1 to accommodate the dedicated branch circuits for the future installation of EVSE.
2. The construction documents shall indicate on or more location(s) convenient to the planned offstreet loading space(s) reserved for medium-and heavy-duty ZEV charging cabinets and charging dispensers, and a pathway reserved for routing of conduit from the termination of the raceway(s) or busway(s) to the charging cabinet(s) and dispenser(s) as shown in Table 5.106.5.4.1
3. Raceway(s) or busway(s) originating at a main service panel or a subpanel(s) serving the area where potential future medium-and heavy-duty EVSE will be located and shall terminate in close proximity to the potential future location of the charging equipments for medium- and heavy-duty vehicles.
4. The raceway(s) or busway(s) shall be sufficient size to carry the minimum additional system load to the future location of the charging for medium- and heavy-duty ZEVs as shown in Table 5.106.5.4.1.

TABLE 5.106.5.4.1 RACEWAY CONDUIT AND PANEL POWER REQUIREMENTS FOR MEDIUM- AND HEAVY-DUTY EVSE [N]

BUILDING TYPE	BUILDING SIZE (SQ. FT.)	NUMBER OF OFF-STREET LOADING SPACES	ADDITIONAL CAPACITY REQUIRED (KVA) FOR RACEWAY & BUSWAY AND TRANSFORMER & PANEL
Grocery	10,000 to 90,000	1 or 2	200
		3 or Greater	400
	Greater than 90,000	1 or Greater	400
Retail	10,000 to 135,000	1 or 2	200
		3 or Greater	400
	Greater than 135,000	1 or Greater	400
Warehouse	20,000 to 256,000	1 or 2	200
		3 or Greater	400
	Greater than 256,000	1 or Greater	400

5.106.8 LIGHT POLLUTION REDUCTION. [N]. I Outdoor lighting systems shall be designed and installed to comply with the following:

1. The minimum requirements in the California Energy Code for Lighting Zones 0-4 as defined in Chapter 10, Section 10-114 of the California Administrative Code; and
2. Backlight (B) ratings as defined in IES TM-15-11 (shown in Table A-1 in Chapter 8);
3. Uplight and Glare ratings as defined in California Energy Code (shown in Tables 130.2-A and 130.2-B in Chapter 8) and
4. Allowable BUG ratings not exceeding those shown in Table 5.106.8, [N] or Comply with a local ordinance lawfully enacted pursuant to Section 101.7, whichever is more stringent.

Exceptions: [N]

1. Luminaires that qualify as exceptions in Sections 130.2 (b) and 140.7 of the California Energy Code.
2. Emergency lighting.
3. Building facade meeting the requirements in Table 140.7-B of the California Energy Code. Part 6.
4. Custom lighting features as allowed by the local enforcing agency, as permitted by Section 101.8 Alternate materials, designs and methods of construction.
5. Luminaires with less than 6,200 initial luminaire lumens.

TABLE 5.106.8 [N] MAXIMUM ALLOWABLE BACKLIGHT, UPLIGHT AND GLARE (BUG) RATINGS [1,2]

ALLOWABLE RATING	LIGHTING ZONE LZ0	LIGHTING ZONE LZ1	LIGHTING ZONE LZ2	LIGHTING ZONE LZ3	LIGHTING ZONE LZ4
MAXIMUM ALLOWABLE BACKLIGHT RATING [3]					
Luminaire greater than 2 mounting heights (MH) from property line	N/A	No Limit	No Limit	No Limit	No Limit
Luminaire back hemisphere is 1-2 MH from property line	N/A	B2	B3	B4	B4
Luminaire back hemisphere is 0.5-1 MH from property line	N/A	B1	B2	B3	B3
Luminaire back hemisphere is less than 0.5 MH from property line	N/A	B0	B0	B1	B2
MAXIMUM ALLOWABLE UPLIGHT RATING (U)					
For area lighting [3]	N/A	U0	U0	U0	U0
For all other outdoor lighting,including decorative luminaires	N/A	U1	U2	U3	UR
MAXIMUM ALLOWABLE GLARE RATING [3] (G)					
	N/A	G1	G2	G3	G4
MAXIMUM ALLOWABLE GLARE RATING [3] (G)					
	N/A	G0	G1	G1	G2
MAXIMUM ALLOWABLE GLARE RATING [3] (G)					
	N/A	G0	G0	G1	G1
MAXIMUM ALLOWABLE GLARE RATING [3] (G)					
	N/A	G0	G0	G0	G1

1. IESNA Lighting Zones 0 and 5 are not applicable; refer to Lighting Zones as defined in the *California Energy Code* and Chapter 10 of the *California Administrative Code.*

2. For property lines that abut public walkways, bikeways, plazas and parking lots, the property line may be considered to be 5 feet beyond the actual property line for purpose of determining compliance with this section. For property lines that abut public roadways and public transit corridors, the property line may be considered to be the centerline of the public roadway or public transit corridor for the purpose of determining compliance with this section.

3. General lighting luminaires in areas such as outdoor parking, sales or storage lots shall meet these reduced ratings. Decorative luminaries located in these areas shall meet *U*-value limits for "all other outdoor lighting"

5.106.8.1 Facing- Backlight
Luminaires within 2MH of a property line shall be oriented so that the nearest property line is behind the fixture, and shall comply with the backlight rating specified in Table 5.106.8 based on the lighting zone and distance to the nearest point of that property line.
Exception: Corners. If two property lines (or two segments of the same property line) have equidistant point to the luminaire, then the luminaire may be oriented so that the intersection of the two lines (the corner) is directly behind the luminaire. The luminaire shall still use the distance to the nearest points(s) on the property lines to determine the required backlight rating.

5.106.8.2 Facing-Glare.
For luminaires covered by 5.106.8.1, if a property line also exists within or extends into the front hemisphere within 2MH of the luminaire then the luminaire shall comply with the more stringent glare rating specified in Table 5.106.8 based on the lighting zone and distance to the nearest point on the nearest property line within the front hemisphere.

Note: [N]
1.See also *California Building Code*, Chapter 12, Section 1205.6 for college campus lighting requirements for parking facilities and walkways.
2.Refer to Chapter 8 (Compliance Forms, Worksheets and Reference Material) for IES TM-15-11 Table A-1, *California Energy Code* Tables 130.2-A and 130.2-B.
3. Refer to the *California Building Code* for requirements for additions and alterations.

5.106.10 GRADING AND PAVING. Construction plans shall indicate how site grading or a drainage system will manage all surface water flows to keep water from entering buildings. Examples of methods to manage surface water include, but are not limited to, the following:

1. Swales.
2. Water collection and disposal systems.
3. French drains.
4. Water retention gardens.
5. Other water measures which keep surface water away from buildings and aid in groundwater recharge.
Exception: Additions and alterations not altering the drainage path.

5.106.12 SHADE TREES [DSA-SS]. Shade Trees shall be planted to comply with Sections 5.106.12.1, 5.106.12.2, and 5.106.12.3. Percentages shown shall be measured at noon on the summer solstice. Landscape irrigation necessary to establish and maintain tree health shall comply with Section 5.304.6.

5.106.12.1 Surface parking areas. Shade tree plantings, minimum #10 container size or equal, shall be installed to provide shade over 50 percent of the parking area within 15 years.

Exceptions: Surface parking area covered by solar photovoltaic shade structures with roofing materials that comply with Table A5.106.11.2.2 in Appendix A5 shall be permitted in whole or in part in lieu of shade tree planting.

5.106.12.2 Landscape areas. Shade tress plantings, minimum #10 container size or equal shall be installed to provide shade of 20% of the landscape area within 15 years.

Exceptions: Playfields for organized sport activity are not included in the total area calculation.

5.106.12.3. Hardscape areas. Shade tree plantings, minimum #10 container size or equal shall be installed to provide shade over 20 percent of the hardscape area within 15 years.

Exceptions:
1. Walks, hardscape areas covered by solar photovoltaic shade structures or shade structures with roofing materials that comply with Table A5.106.11.2.2 in Appendix A5 shall be permitted in whole or in part in lieu of shade tree planting.
2. Designated and marked play areas of organized sport activity are not included in the total area calculation.

DIVISION 5.2 ENERGY EFFICIENCY
SECTION 5.201 GENERAL
5.201.1 Scope [BSC-CG]. *California Energy Code [DSA-SS].* For the purposes of mandatory energy efficiency standards in this code, the California Energy Commission will continue to adopt mandatory building standards.

DIVISION 5.3 WATER EFFICIENCY AND CONSERVATION
SECTION 5.301 GENERAL
5.301.1 Scope. The provisions of this chapter shall establish the means of conserving water use indoors, outdoors and in wastewater conveyance.

SECTION 5.302 DEFINITIONS
5.302.1 Definitions. The following terms are defined in Chapter 2 *(and are included here for reference)*

EVAPOTRANSPIRATION ADJUSTMENT FACTOR (ETAF) [DSA-SS]. An adjustment factor when applied to reference evapotranspiration that adjusts for plant factors and irrigation efficiency, which ae two major influences on the amount of water that needs to be applied to the landscape.

FOOTPRINT AREA [DSA-SS]. The total area of the furthest exterior wall of the structure projected to natural grade, not including exterior areas such as stairs, covered walkways, patios and decks.

METERING FAUCET. A self-closing faucet that dispenses a specific volume of water for each actuation cycle. The volume or cycle duration can be fixed or adjustable.

GRAYWATER. Pursuant to Health and Safety Code Section 17922.12, "graywater" means untreated wastewater that has not been contaminated by any toilet discharge, has not been affected by infectious, contaminated, or unhealthy bodily wastes, and does not present a threat from contamination by unhealthful processing, manufacturing, or operating wastes. "Graywater" includes, but is not limited to wastewater from bathtubs, showers, bathroom washbasins, clothes washing machines and laundry tubs, but does not include waste water from kitchen sinks or dishwashers.

MODEL WATER EFFICIENT LANDSCAPE ORDINANCE (MWELO). The California ordinance regulating landscape design, installation and maintenance practices that will ensure commercial, multifamily and other developer installed landscapes greater than 2500 square feet meet an irrigation water budget developed based on landscaped area and climatological parameters.

MODEL WATER EFFICIENT LANDSCAPE ORDINANCE (MWELO). [HCD] The California model ordinance (California Code of Regulations, Title 23, Division 2, Chapter 2.7), regulating landscape design, installation and maintenance practices. Local agencies are required to adopt the updated MWELO, or adopt a local ordinance at least as effective as the MWELO.

POTABLE WATER. Water that is drinkable and meets the U.S. Environmental Protection Agency (EPA) Drinking Water Standards. See definition in the California Plumbing Code, Part 5.

POTABLE WATER. [HCD] Water that is satisfactory for drinking, culinary, and domestic purposes, and meets the U.S. Environmental Protection Agency (EPA) Drinking Water Standards and the requirements of the Health Authority Having Jurisdiction.

RECYCLED WATER. Water which, as a result of treatment of waste, is suitable for a direct beneficial use or a controlled use that would not otherwise occur [Water Code Section 13050 (n)]. Simply put, recycled water is water treated to remove waste matter attaining a quality that is suitable to use the water again.

SUBMETER. [HCD 1] A secondary device beyond a meter that measures water consumption of an individual rental unit within a multiunit residential structure or mixed-use residential and commercial structure. (See Civic Code Section 1954.202 (g) and Water code Section 517 for additional details.)

WATER BUDGET. Is the estimated total landscape irrigation water use which shall not exceed the maximum applied water allowance calculated in accordance with the Department of Water Resources Model Efficient Landscape Ordinance (MWELO).

FOR CONSTRUCTION - NOT FOR CONSTRUCTION

FUHRMAN LEAMY
LAND GROUP
DESIGN • SERVICE • SOLUTIONS
3400 DOUGLAS BLVD, SUITE 275
ROSEVILLE, CALIFORNIA 95661
916.783.5263 • FLLANDGROUP.COM

JOB NO. : CRV- 25027

CITY OF ROSEVILLE APPROVAL

PROJECT:
JM-52 PARK
5097 MISTY RIDGE DRIVE
ROSEVILLE, CA

CLIENT:
CITY OF ROSEVILLE

REVISIONS	DATE
1	
2	
3	
4	

ISSUE		DATE
1	1ST SUBMITTAL	9.05.2025
2	2ND SUBMITTAL	10.08.2025
3	3RD SUBMITTAL	11.21.2025
4	4TH SUBMITTAL	1.28.2026
5		

REGISTERED LANDSCAPE ARCHITECT
KEVIN C. LEAMY
No. 4965
RENEWAL 12/31/26
Professional Engineer
1.15.2026
DATE
STATE OF CALIFORNIA

DRAWN : AM
CHECKED : KCL
SCALE: : AS SHOWN

SHEET TITLE:
CAL GREEN DOCUMENTATION

SHEET
CV-2.0A
2 OF 30 SHEETS

DISCLAIMER:THIS DOCUMENT IS PROVIDED AND INTENDED TO BE USED AS A MEANS TO INDICATE AREAS OF COMPLIANCE WITH THE CALIFORNIA GREEN BUILDING STANDARDS (CALGREEN) CODE. DUE TO THE VARIABLES BETWEEN BUILDING DEPARTMENT JURISDICTIONS, THIS CHECKLIST IS TO BE USED ON AN INDIVIDUAL PROJECT BASIS AND MAY BE MODIFIED BY THE END USER TO MEET THOSE INDIVIDUAL NEEDS. THE END USER ASSUMES ALL RESPONSIBILITY ASSOCIATED WITH THE USE OF THIS DOCUMENT, INCLUDING VERIFICATION WITH THE FULL CODE.

FURHMAN LEAMY LAND GROUP HEREBY RESERVES ITS COMMON LAW COPYRIGHT AND OTHER PROPERTY RIGHTS IN THESE PLANS. THESE PLANS AND DRAWINGS ARE NOT TO BE REPRODUCED, CHANGED OR COPIED IN ANY FORM OR MANNER WHATSOEVER WITHOUT FIRST OBTAINING THE EXPRESS WRITTEN PERMISSION OF FURHMAN LEAMY LAND GROUP NOR ARE THEY TO BE ASSIGNED TO ANY THIRD PARTY WITHOUT FIRST OBTAINING WRITTEN PERMISSION AND CONSENT.

2022 CALIFORNIA GREEN BUILDING STANDARDS CODE

NONRESIDENTIAL MANDATORY MEASURES, SHEET 2 (January 2023)

Y = YES
N/A = NOT APPLICABLE
RESPON. PARTY = RESPONSIBLE PARTY (ie: ARCHITECT, ENGINEER, OWNER, CONTRACTOR, INSPECTOR ETC.)

Y	N/A	RESPON. PARTY

SECTION 5.303 INDOOR WATER USE

5.303.1 METERS. Separate submeters or metering devices shall be installed for the uses described in Sections 503.1.1 and 503.1.2.

5.303.1.1 Buildings in excess of 50,000 square feet. Separate submeters shall be installed as follows:

1. For each individual leased, rented or other tenant space within the building projected to consume more than 100 gal/day (380 L/day), including, but not limited to, spaces used for laundry or cleaners, restaurant or food service, medical or dental office, laboratory, or beauty salon or barber shop.
2. Where separate submeters for individual building tenants are unfeasible, for water supplied to the following subsystems:
   a. Makeup water for cooling towers where flow through is greater than 500 gpm (30 L/s).
   b. Makeup water for evaporative coolers greater than 6 gpm (0.04 L/s).
   c. Steam and hot water boilers with energy input more than 500,000 Btu/h (147 kW).

5.303.1.2 Excess consumption. A separate submeter or metering device shall be provided for any tenant within a new building or within an addition that is projected to consume more than 1,000 gal/day.

5.303.3 WATER CONSERVING PLUMBING FIXTURES AND FITTINGS. Plumbing fixtures (water closets and urinals) and fittings (faucets and showerheads) shall comply with the following:

5.303.3.1 Water Closets. The effective flush volume of all water closets shall not exceed 1.28 gallons per flush. Tank-type water closets shall be certified to the performance criteria of the U.S. EPA WaterSense Specification for Tank-Type toilets.

Note: The effective flush volume of dual flush toilets is defined as the composite, average flush volume of two reduced flushes and one full flush.

5.303.3.2 Urinals.

5.303.3.2.1 Wall-mounted Urinals. The effective flush volume of wall-mounted urinals shall not exceed 0.125 gallons per flush.

5.303.3.2.2 Floor-mounted Urinals. The effective flush volume of floor-mounted or other urinals shall not exceed 0.5 gallons per flush.

5.303.3.3 Showerheads. [BSC-CG]

5.303.3.3.1 Single showerhead. Showerheads shall have a maximum flow rate of not more than 1.8 gallons per minute at 80 psi. Showerheads shall be certified to the performance criteria of the U.S. EPA WaterSense Specification for Showerheads.

5.303.3.3.2 Multiple showerheads serving one shower. When a shower is served by more than one showerhead, the combined flow rate of all the showerheads and/or other shower outlets controlled by a single valve shall not exceed 1.8 gallons per minute at 80 psi, or the shower shall be designed to allow only one shower outlet to be in operation at a time.
Note: A hand-held shower shall be considered a showerhead.

5.303.3.4 Faucets and fountains.

5.303.3.4.1 Nonresidential Lavatory faucets. Lavatory faucets shall have a maximum flow rate of not more than 0.5 gallons per minute at 60 psi.

5.303.3.4.2 Kitchen faucets. Kitchen faucets shall have a maximum flow rate of not more than 1.8 gallons per minute at 60 psi. Kitchen faucets may temporarily increase the flow above the maximum rate, but not to exceed 2.2 gallons per minute at 60 psi, and must default to a maximum flow rate of 1.8 gallons per minute at 60 psi.

5.303.3.4.3 Wash fountains. Wash fountains shall have a maximum flow rate of not more than1.8 gallons per minute/20 [rim space (inches) at 60 psi].

5.303.3.4.4 Metering faucets. Metering faucets shall not deliver more than 0.20 gallons per cycle.

5.303.3.4.5 Metering faucets for wash fountains. Metering faucets for wash fountains shall have a maximum flow rate of not more than 0.20 gallons per minute/20 [rim space (inches) at 60 psi].

Note: Where complying faucets are unavailable, aerators or other means may be used to achieve reduction.

5.303.3.4.6 Pre-rinse spray value
When installed, shall meet the requirements in the *California Code of Regulations*, Title 20 (Appliance Efficiency Regulations), Section 1605.1 (h)(4) Table H-2, Section 1605.3 (h)(4)(A), and Section 1607 (d)(7), and shall be equipped with an integral automatic shutoff.

FOR REFERENCE ONLY: The following table and code section have been reprinted from the *California Code of Regulations*, Title 20 (Appliance Efficiency Regulations), Section 1605.1 (h)(4) and Section 1605.3 (h)(4)(A).

TABLE H-2

STANDARDS FOR COMMERCIAL PRE-RINSE SPRAY VALUES MANUFACTURED ON OR AFTER JANUARY 28, 2019

PRODUCT CLASS [spray force in ounce force (ozf)]	MAXIMUM FLOW RATE (gpm)
Product Class 1 (≤ 5.0 ozf)	1.00
Product Class 2 (> 5.0 ozf and ≤ 8.0 ozf)	1.20
Product Class 3 (> 8.0 ozf)	1.28

5.303.4 COMMERCIAL KITCHEN EQUIPMENT.

5.303.4.1 Food Waste Disposers. Disposers shall either modulate the use of water to no more than 1 gpm when the disposer is not in use (not actively grinding food waste/no-load) or shall automatically shut off after no more than 10 minutes of inactivity. Disposers shall use no more than 8 gpm of water.
Note: This code section does not affect local jurisdiction authority to prohibit or require disposer installation.

5.303.5 AREAS OF ADDITION OR ALTERATION. For those occupancies within the authority of the California Building Standards Commission as specified in Section 103, the provisions of Section 5.303.3 and 5.303.4 shall apply to new fixtures in additions or areas of alteration to the building.

5.303.6 STANDARDS FOR PLUMBING FIXTURES AND FITTINGS. Plumbing fixtures and fittings shall be installed in accordance with the *California Plumbing Code*, and shall meet the applicable standards referenced in Table 1701.1 of the *California Plumbing Code* and in Chapter 6 of this code.

SECTION 5.304 OUTDOOR WATER USE

5.304.1 OUTDOOR POTABLE WATER USE IN LANDSCAPE AREAS. Nonresidential developments shall comply with a local water efficient landscape ordinance or the current California Department of Water Resources' Model Water Efficient Landscape Ordinance (MWELO), whichever is more stringent.

Notes:
1. The Model Water Efficient Landscape Ordinance (MWELO) is located in the California Code of Regulations, Title 23, Chapter 2.7, Division 2.
2. MWELO and supporting documents, including a water budget calculator, are available at: https://www.water.ca.gov/.

5.304.6 OUTDOOR POTABLE WATER USE IN LANDSCAPE AREAS. For public schools and community colleges, landscape projects as described in Sections 5.304.6.1 and 5.304.6.2 shall comply with the California Department of Water Resources Model Water Efficient Landscape Ordinance (MWELO) commencing with Section 490 of Chapter 2.7, Division 2, Title 23, *California Code of Regulations*, except that the evapotranspiration adjustment factor (ETAF) shall be 0.65 with an additional water allowance for special landscape areas (SLA) of 0.35.

Exception: Any project with an aggregate landscape area of 2,500 square feet or less may comply with the prescriptive measures contained in Appendix D of the MWELO.

5.304.6.1 Newly constructed landscapes. New construction projects with an aggregate landscape area equal to or greater than 500 square feet.

5.304.6.2 Rehabilitated landscapes. Rehabilitated landscape projects with an aggregate landscape area equal to or greater than 1,200 square feet.

DIVISION 5.4 MATERIAL CONSERVATION AND RESOURCE EFFICIENCY

SECTION 5.401 GENERAL

5.401.1 SCOPE. The provisions of this chapter shall outline means of achieving material conservation and resource efficiency through protection of buildings from exterior moisture, construction waste diversion, employment of techniques to reduce pollution through recycling of materials, and building commissioning or testing and adjusting.

SECTION 5.402 DEFINITIONS

5.402.1 DEFINITIONS. The following terms are defined in Chapter 2 *(and are included here for reference)*

ADJUST. To regulate fluid flow rate and air patterns at the terminal equipment, such as to reduce fan speed or adjust a damper.

BALANCE. To proportion flows within the distribution system, including sub-mains, branches and terminals, according to design quantities.

BUILDING COMMISSIONING. A systematic quality assurance process that spans the entire design and construction process, including verifying and documenting that building systems and components are planned, designed, installed, tested, operated and maintained to meet the owner's project requirements.

ORGANIC WASTE. Food waste, green waste, landscape and pruning wste, nonhazardous wood waste, and food soiled paper waste that is mixed in with food waste.

TEST. A procedure to determine quantitative performance of a system or equipment

SECTION 5.407 WATER RESISTANCE AND MOISTURE MANAGEMENT

5.407.1 WEATHER PROTECTION. Provide a weather-resistant exterior wall and foundation envelope as required by California Building Code Section 1402.2 (Weather Protection), manufacturer's installation instructions or local ordinance, whichever is more stringent.

5.407.2 MOISTURE CONTROL. Employ moisture control measures by the following methods.

5.407.2.1 Sprinklers. Design and maintain landscape irrigation systems to prevent spray on structures.

5.407.2.2 Entries and openings. Design exterior entries and/or openings subject to foot traffic or wind-driven rain to prevent water intrusion into buildings as follows:

5.407.2.2.1 Exterior door protection. Primary exterior entries shall be covered to prevent water intrusion by using nonabsorbent floor and wall finishes within at least 2 feet around and perpendicular to such openings plus at least one of the following:

1. An installed awning at least 4 feet in depth.
2. The door is protected by a roof overhang at least 4 feet in depth.
3. The door is recessed at least 4 feet.
4. Other methods which provide equivalent protection.

5.407.2.2.2 Flashing. Install flashings integrated with a drainage plane.

SECTION 5.408 CONSTRUCTION WASTE REDUCTION, DISPOSAL AND RECYCLING

5.408.1 CONSTRUCTION WASTE MANAGEMENT. Recycle and/or salvage for reuse a minimum of 65% of the non-hazardous construction and demolition waste in accordance with Section 5.408.1.1, 5.408.1.2 or 5.408.1.3; or meet a local construction and demolition waste management ordinance, whichever is more stringent.

5.408.1.1 Construction waste management plan. Where a local jurisdiction does not have a construction and demolition waste management ordinance, submit a construction waste management plan that:

1. Identifies the construction and demolition waste materials to be diverted from disposal by efficient usage, recycling, reuse on the project or salvage for future use or sale.
2. Determines if construction and demolition waste materials will be sorted on-site (source-separated) or bulk mixed (single stream).
3. Identifies diversion facilities where construction and demolition waste material collected will be taken.
4. Specifies that the amount of construction and demolition waste materials diverted shall be calculated by weight or volume, but not by both.

5.408.1.2 Waste Management Company. Utilize a waste management company that can provide verifiable documentation that the percentage of construction and demolition waste material diverted from the landfill complies with this section.

Note: The owner or contractor shall make the determination if the construction and demolition waste material will be diverted by a waste management company.

Exceptions to Sections 5.408.1.1 and 5.408.1.2:

1. Excavated soil and land-clearing debris.
2. Alternate waste reduction methods developed by working with local agencies if diversion or recycle facilities capable of compliance with this item do not exist.
3. Demolition waste meeting local ordinance or calculated in consideration of local recycling facilities and markets.

5.408.1.3 Waste stream reduction alternative. The combined weight of new construction disposal that does not exceed two pounds per square foot of building area may be deemed to meet the 65% minimum requirement as approved by the enforcing agency.

5.408.1.4 Documentation. Documentation shall be provided to the enforcing agency which demonstrates compliance with Sections 5.408.1.1, through 5.408.1.3. The waste management plan shall be updated as necessary and shall be accessible during construction for examination by the enforcing agency.

Notes:

1. Sample forms found in "A Guide to the California Green Building Standards Code (Nonresidential)" located www.dgs.ca.gov/BSC/Resources/Page-Content/Building-Standards-Commission-Resources-List-Folder/CALGreen may be used to assist in documenting compliance with the waste management plan.
2. Mixed construction and demolition debris processors can be located at the California Department of Resources Recycling and Recovery (CalRecycle).

5.408.2 UNIVERSAL WASTE. [A] Additions and alterations to a building or tenant space that meet the scoping provisions in Section 301.3 for nonresidential additions and alterations, shall require verification that Universal Waste items such as fluorescent lamps and ballast and mercury containing thermostats as well as other California prohibited Universal Waste materials are disposed of properly and are diverted from landfills. A list of prohibited Universal Waste materials shall be included in the construction documents.

Note: Refer to the Universal Waste Rule link at: http://www.dtsc.ca.gov/universalwaste/

5.408.3 EXCAVATED SOIL AND LAND CLEARING DEBRIS. 100 percent of trees, stumps, rocks and associated vegetation and soils resulting primarily from land clearing shall be reused or recycled. For a phased project, such material may be stockpiled on site until the storage site is developed.

Exception: Reuse, either on or off-site, of vegetation or soil contaminated by disease or pest infestation.

Notes:

1. If contamination by disease or pest infestation is suspected, contact the County Agricultural Commissioner and follow its direction for recycling or disposal of the material.
2. For a map of know pest and/or disease quarantine zones, consult with the California Department of Food and Agriculture. (www.cdfa.ca.gov)

SECTION 5.410 BUILDING MAINTENANCE AND OPERATIONS

5.410.1 RECYCLING BY OCCUPANTS. Provide readily accessible areas that serve the entire building and are identified for the depositing, storage and collection of non-hazardous materials for recycling, including (at a minimum) paper, corrugated cardboard, glass, plastics, organic waste, and metals or meet a lawfully enacted local recycling ordinance, if more restrictive.

Exception: Rural jurisdictions that meet and apply for the exemption in Public Resources Code 42649.82 (a)(2)(A) et seq. shall also be exempt from the organic waste portion of this section.

5.410.1.1 Additions. All additions conducted within a 12-month period under single or multiple permits, resulting in an increase of 30% or more in floor area, shall provide recycling areas on site.

Exception: Additions within a tenant space resulting in less than a 30% increase in the tenant space floor area.

5.410.1.2 Sample ordinance. Space allocation for recycling areas shall comply with Chapter 18, Part 3, Division 30 of the *Public Resources Code*. Chapter 18 is known as the California Solid Waste Reuse and Recycling Access Act of 1991 (Act).

Note: A sample ordinance for use by local agencies may be found in Appendix A of the document at the CalRecycle's web site.

5.410.2 COMMISSIONING. [N] New buildings 10,000 square feet and over. For new buildings 10,000 square feet and over, building commissioning shall be included in the design and construction processes of the building project to verify that the building systems and components meet the owner's or owner representative's project requirements. Commissioning shall be performed in accordance with this section by trained personnel with experience on projects of comparable size and complexity. For I-occupancies that are not regulated by OSHPD or for I-occupancies and L-occupancies that are not regulated y the California Energy Code Section 100.0 Scope, all requirements in Sections 5.410.2 through 5.410.2.6 shall apply.

Note: For energy-related systems under the scope (Section 100) of the California Energy Code, including heating, ventilation, air conditioning (HVAC) systems and controls, indoor lighting systems and controls, as well as water heating systems and controls, refer to California Energy Code Section 120.8 for commissioning requirements

Commissioning requirements shall include:

1. Owner's or Owner representative's project requirements.
2. Basis of design.
3. Commissioning measures shown in the construction documents.
4. Commissioning plan.
5. Functional performance testing.
6. Documentation and training.
7. Commissioning report.

Exceptions:

1. Unconditioned warehouses of any size.
2. Areas less than 10,000 square feet used for offices or other conditioned accessory spaces within unconditioned warehouses.
3. Tenant improvements less than 10,000 square feet as described in Section 303.1.1.
4. Open parking garages of any size, or open parking garage areas, of any size, within a structure.

Note: For the purposes of this section, unconditioned shall mean a building, area, or room which does not provide heating and or air conditioning.

Informational Notes:

1. IAS AC 476 is an accreditation criteria for organizations providing training and/or certification of commissioning personnel. AC 476 is available to the Authority Having Jurisdiction as a reference for qualifications of commissioning personnel. AC 476 does not certify individuals to conduct functional performance tests or to adjust and balance systems.
2. Functional performance testing for heating, ventilation, air conditioning systems and lighting controls must be performed in compliance with the *California Energy Code*.

5.410.2.1 Owner's or Owner Representative's Project Requirements (OPR). [N] The expectations and requirements of the building appropriate to its phase shall be documented before the design phase of the project begins. This documentation shall include the following:

1. Environmental and sustainability goals.
2. Building sustainable goals.
3. Indoor environmental quality requirements.
4. Project program, including facility functions and hours of operation, and need for after hours operation.
5. Equipment and systems expectations.
6. Building occupant and operation and maintenance (O&M) personnel expectations.

5.410.2.2 Basis of Design (BOD). [N] A written explanation of how the design of the building systems meets the OPR shall be completed at the design phase of the building project. The Basis of Design document shall cover the following systems:

1. Renewable energy systems.
2. Landscape irrigation systems.
3. Water reuse system.

5.410.2.3 Commissioning plan. [N] Prior to permit issuance a commissioning plan shall be completed to document how the project will be commissioned. The commissioning plan shall include the following:

1. General project information.
2. Commissioning goals.
3. Systems to be commissioned. Plans to test systems and components shall include:
   a. An explanation of the original design intent.
   b. Equipment and systems to be tested, including the extent of tests.
   c. Functions to be tested.
   d. Conditions under which the test shall be performed.
   e. Measurable criteria for acceptable performance.
4. Commissioning team information.
5. Commissioning process activities, schedules and responsibilities. Plans for the completion of commissioning shall be included.

5.410.2.4 Functional performance testing. [N] Functional performance tests shall demonstrate the correct installation and operation of each component, system and system-to-system interface in accordance with the approved plans and specifications. Functional performance testing reports shall contain information addressing each of the building components tested, the testing methods utilized, and include any readings and adjustments made.

5.410.2.5 Documentation and training. [N] A Systems Manual and Systems Operations Training are required, including Occupational Safety and Health Act (OSHA) requirements in *California Code of Regulations* (CCR), Title 8, Section 5142, and other related regulations.

5.410.2.5.1 Systems manual. [N] Documentation of the operational aspects of the building shall be completed within the systems manual and delivered to the building owner or representative. The systems manual shall include the following:

1. Site information, including facility description, history and current requirements.
2. Site contact information.
3. Basic operations and maintenance, including general site operating procedures, basic troubleshooting, recommended maintenance requirements, site events log.
4. Major systems.
5. Site equipment inventory and maintenance notes.
6. A copy of verifications required by the enforcing agency or this code.
7. Other resources and documentation, if applicable.

5.410.2.5.2 Systems operations training. [N] A program for training of the appropriate maintenance staff for each equipment type and/or system shall be developed and documented in the commissioning report and shall include the following:

1. System/equipment overview (what it is, what it does and with what other systems and/or equipment it interfaces).
2. Review and demonstration of servicing/preventive maintenance.
3. Review of the information in the Systems Manual.
4. Review of the record drawings on the system/equipment.

5.410.2.6 Commissioning report. [N] A report of commissioning process activities undertaken through the design and construction phases of the building project shall be completed and provided to the owner or representative.

5.410.4 TESTING AND ADJUSTING. New buildings less than 10,000 square feet. Testing and adjusting of systems shall be required for new buildings less than 10,000 square feet or new systems to serve an addition or alteration subject to Section 303.1.

5.410.4.2 (Reserved)

Note: For energy-related systems under the scope (Section 100) of the California Energy Code, including heating, ventilation, air conditioning (HVAC) systems and controls, indoor lighting system and controls, as well as water heating systems and controls, refer to California Energy Code Section 120.8 for commissioning requirements and Sections 120.5, 120.6, 130.4, and 140.9(b)3 for additional testing requirements of specific systems.

5.410.4.2 Systems. Develop a written plan of procedures for testing and adjusting systems. Systems to be included for testing and adjusting shall include at a minimum, as applicable to the project:

1. Renewable energy systems.
2. Landscape irrigation systems.
3. Water reuse systems.

5.410.4.3 Procedures. Perform testing and adjusting procedures in accordance with manufacturer's specifications and applicable standards on each system.

5.410.4.3.1 HVAC balancing. In addition to testing and adjusting, before a new space-conditioning system serving a building or space is operated for normal use, the system shall be balanced in accordance with the procedures defined by the Testing Adjusting and Balancing Bureau National Standards; the National Environmental Balancing Bureau Procedural Standards; Associated Air Balance Council National Standards or as approved by the enforcing agency.

5.410.4.4 Reporting. After completion of testing, adjusting and balancing, provide a final report of testing signed by the individual responsible for performing these services.

5.410.4.5 Operation and maintenance (O & M) manual. Provide the building owner or representative with detailed operating and maintenance instructions and copies of guaranties/warranties for each system. O & M instructions shall be consistent with OSHA requirements in CCR, Title 8, Section 5142, and other related regulations.

5.410.4.5.1 Inspections and reports. Include a copy of all inspection verifications and reports required by the enforcing agency.

DIVISION 5.5 ENVIRONMENTAL QUALITY

SECTION 5.501 GENERAL

5.501.1 SCOPE. The provisions of this chapter shall outline means of reducing the quantity of air contaminants that are odorous, irritating, and/or harmful to the comfort and well-being of a building's installers, occupants and neighbors.

SECTION 5.502 DEFINITIONS

5.502.1 DEFINITIONS. The following terms are defined in Chapter 2 *(and are included here for reference)*

ARTERIAL HIGHWAY. A general term denoting a highway primarily for through traffic usually on a continuous route.

A-WEIGHTED SOUND LEVEL (dBA). The sound pressure level in decibels as measured on a sound level meter using the internationally standardized A-weighting filter or as computed from sound spectral data to which A-weighting adjustments have been made.

1 BTU/HOUR. British thermal units per hour, also referred to as Btu. The amount of heat required to raise one pound of water one degree Fahrenheit per hour, a common measure of heat transfer rate. A ton of refrigeration is 12,000 Btu, the amount of heat required to melt a ton (2,000 pounds) of ice at 32^{0} Fahrenheit.

COMMUNITY NOISE EQUIVALENT LEVEL (CNEL). A metric similar to the day-night average sound level (Ldn), except that a 5 decibel adjustment is added to the equivalent continuous sound exposure level for evening hours (7pm to 10pm) in addition to the 10 dB nighttime adjustment used in the Ldn.

COMPOSITE WOOD PRODUCTS. Composite wood products include hardwood plywood, particleboard and medium density fiberboard. "Composite wood products" does not include hardboard, structural plywood, structural panels, structural composite lumber, oriented strand board, glued laminated timber, timber, prefabricated wood I-joists or finger-jointed lumber, all as specified in California Code of Regulations (CCR), Title 17, Section 93120.1(a).

Note: See CCR, Title 17, Section 93120.1.

DAY-NIGHT AVERAGE SOUND LEVEL (Ldn). The A-weighted equivalent continuous sound exposure level for a 24-hour period with a 10 dB adjustment added to sound levels occurring during nighttime hours (10p.m. to 7 a.m.).

DECIBEL (db). A measure on a logarithmic scale of the magnitude of a particular quantity (such as sound pressure, sound power, sound intensity) with respect to a reference quantity.

ELECTRIC VEHICLE (EV). An automotive-type vehicle for on-road use, such as passenger automobiles, buses, trucks, vans, neighborhood electric vehicles, electric motorcycles, and the like, primarily powered by an electric motor that draws current from a rechargeable storage battery, fuel cell, photovoltaic array, or other source of electric current. Plug-in hybrid electric vehicles (PHEV) are considered electric vehicles. For purposes of the *California Electrical Code*, off-road, self-propelled electric vehicles, such as industrial trucks, hoists, lifts, transports, golf carts, airline ground support equipment, tractors, boats, and the like, are not included.

ELECTRIC VEHICLE CHARGING STATION(S) (EVCS)j). One or more spaces intended for charging electric vehicles.

ELECTRIC VEHICLE SUPPLY EQUIPMENT (EVSE). The conductors, including the ungrounded, grounded, and equipment grounding conductors and the electric vehicle connectors, attachment plugs, and all other fittings, devices, power outlets, or apparatus installed specifically for the purpose of transferring energy between the premises wiring and the electric vehicle.

ENERGY EQUIVALENT (NOISE) LEVEL (Leq). The level of a steady noise which would have the same energy as the fluctuating noise level integrated over the time of period of interest.

EXPRESSWAY. An arterial highway for through traffic which may have partial control of access, but which may or may not be divided or have grade separations at intersections.

FREEWAY. A divided arterial highway with full control of access and with grade separations at intersections.

GLOBAL WARMING POTENTIAL (GWP). The radiative forcing impact of one mass-based unit of a given greenhouse gas relative to an equivalent unit of carbon dioxide over a given period of time. Carbon dioxide is the reference compound with a GWP of one.

GLOBAL WARMING POTENTIAL VALUE (GWP VALUE). A 100-year GWP value published by the Intergovernmental Panel on Climate Change (IPCC) in either its Second Assessment Report (SAR) (IPCC, 1995); or its Fourth Assessment A-3 Report (AR4) (IPCC, 2007). The SAR GWP values are found in column "SAR (100-yr)" of Table 2.14.; the AR4 GWP values are found in column "100 yr" of Table 2.14.

HIGH-GWP REFRIGERANT. A compound used as a heat transfer fluid or gas that is: (a) a chlorofluorocarbon, a hdrochlorofluorocarbon, a hydrofluorocarbon, a perfluorocarbon, or any compound or blend of compounds, with a GWP value equal to or greater than 150, or (B) any ozone depleting substance as defined in Title 40 of the Code of Federal Regulations, Part 82, sec.82.3 (as amended March 10, 2009).

LONG RADIUS ELBOW. Pipe fitting installed between two lengths of pipe or tubing to allow a change of direction, with a radius 1.5 times the pipe diameter.

LOW-GWP REFRIGERANT. A compound used as a heat transfer fluid or gas that: (A) has a GWP value less than 150, and (B) is not an ozone depleting substance as defined in Title 40 of the Code of Federal Regulations, Part 82, sec.82.3 (as amended March 10, 2009).

MERV. Filter minimum efficiency reporting value, based on ASHRAE 52.2–1999.

MAXIMUM INCREMENTAL REACTIVITY (MIR). The maximum change in weight of ozone formed by adding a compound to the "Base REactive Organic Gas (ROG) Mixture" per weight of compound added, expressed to hundreths of a gram (g O^{3}/g ROC).

PRODUCT-WEIGHTED MIR (PWMIR). The sum of all weighted-MIR for all ingredients in a product subject to this article. The PWMIR is the total product reactivity expressed to hundredths of a gram of ozone formed per gram of product (excluding container and packaging).

PSIG. Pounds per square inch, guage.

REACTIVE ORGANIC COMPOUND (ROC). Any compound that has the potential, once emitted, to contribute to ozone formation in the troposphere.

SCHRADER ACCESS VALVES. Access fittings with a valve core installed.

SHORT RADIUS ELBOW. Pipe fitting installed between two lengths of pipe or tubing to allow a change of direction, with a radius 1.0 times the pipe diameter.

SUPERMARKET. For the purposes of Section 5.508.2, a supermarket is any retail food facility with 8,000 square feet or more conditioned area, and that utilizes either refrigerated display cases, or walk-in coolers or freezers connected to remote compressor units or condensing units.

VOC. A volatile organic compound broadly defined as a chemical compound based on carbon chains or rings with vapor pressures greater than 0.1 millimeters of mercury at room temperature. These compounds typically contain hydrogen and may contain oxygen, nitrogen and other elements. See CCR Title 17, Section 94508(a)

Note: Where specific regulations are cited from different agencies such as SCAQMD, ARB, etc., the VOC definition included in that specific regulation is the one that prevails for the specific measure in question.

SECTION 5.503 FIREPLACES

5.503.1 FIREPLACES. Install only a direct-vent sealed-combustion gas or sealed wood-burning fireplace, or a sealed woodstove or pellet stove, and refer to residential requirements in the California Energy Code, Title 24, Part 6, Subchapter 7, Section 150. Woodstoves, pellet stoves and fireplaces shall comply with applicable local ordinances.

5.503.1.1 Woodstoves. Woodstoves and pellet stoves shall comply with U.S. EPA New Source Performance Standards (NSPS) emission limits as applicable, and shall have a permanent label indicating they are certified to meet the emission limits.

SECTION 5.504 POLLUTANT CONTROL

5.504.1 TEMPORARY VENTILATION. The permanent HVAC system shall only be used during construction if necessary to condition the building or areas of addition or alteration within the required temperature range for material and equipment installation. If the HVAC system is used during construction, use return air filters with a Minimum Efficiency Reporting Value (MERV) of 8, based on ASHRAE 52.2-1999, or an average efficiency of 30% based on ASHRAE 52.1-1992 Replace all filters immediately prior to occupancy, or, if the building is occupied during alteration, at the conclusion of construction.

5.504.3 Covering of duct openings and protection of mechanical equipment during construction. At the time of rough installation and during storage on the construction site until final startup of the heating, cooling and ventilation equipment, all duct and other related air distribution component openings shall be covered with tape, plastic, sheetmetal or other methods acceptable to the enforcing agency to reduce the amount of dust, water and debris which may enter the system.

FOR CONSTRUCTION ONLY - NOT

FUHRMAN LEAMY LAND GROUP
DESIGN • SERVICE • SOLUTIONS
3400 DOUGLAS BLVD, SUITE 275
ROSEVILLE, CALIFORNIA 95661
916.783.5263 • FLLANDGROUP.COM

JOB NO. : CRV- 25027

CITY OF ROSEVILLE APPROVAL

PROJECT:

JM-52 PARK

5097 MISTY RIDGE DRIVE
ROSEVILLE, CA

CLIENT:

CITY OF ROSEVILLE

REVISIONS	DATE
1	
2	
3	
4	

ISSUE		DATE
1	1ST SUBMITTAL	9.05.2025
2	2ND SUBMITTAL	10.08.2025
3	3RD SUBMITTAL	11.21.2025
4	4TH SUBMITTAL	1.28.2026
5		

REGISTERED LANDSCAPE ARCHITECT
KEVIN C. LEAMY
No. 4965
12/31/26
Renewal Date
1.15.2026
Date
STATE OF CALIFORNIA

DRAWN : AM
CHECKED : KCL
SCALE: : AS SHOWN

SHEET TITLE:

CAL GREEN DOCUMENTATION

SHEET

CV-2.0B

3 OF 30 SHEETS

DISCLAIMER:THIS DOCUMENT IS PROVIDED AND INTENDED TO BE USED AS A MEANS TO INDICATE AREAS OF COMPLIANCE WITH THE CALIFORNIA GREEN BUILDING STANDARDS (CALGREEN) CODE. DUE TO THE VARIABLES BETWEEN BUILDING DEPARTMENT JURISDICTIONS, THIS CHECKLIST IS TO BE USED ON AN INDIVIDUAL PROJECT BASIS AND MAY BE MODIFIED BY THE END USER TO MEET THOSE INDIVIDUAL NEEDS. THE END USER ASSUMES ALL RESPONSIBILITY ASSOCIATED WITH THE USE OF THIS DOCUMENT, INCLUDING VERIFICATION WITH THE FULL CODE.

AIA California

2022 CALIFORNIA GREEN BUILDING STANDARDS CODE

NONRESIDENTIAL MANDATORY MEASURES, SHEET 3 (January 2023)

Y = YES
N/A = NOT APPLICABLE
RESPON. PARTY = RESPONSIBLE PARTY (ie: ARCHITECT, ENGINEER, OWNER, CONTRACTOR, INSPECTOR ETC.)

5.504.4 FINISH MATERIAL POLLUTANT CONTROL. Finish materials shall comply with Sections 5.504.4.1 through 5.504.4.6.

5.504.4.1 Adhesives, sealants and caulks. Adhesives, sealants, and caulks used on the project shall meet the requirements of the following standards:

1. Adhesives, adhesive bonding primers, adhesive primers, sealants, sealant primers and caulks shall comply with local or regional air pollution control or air quality management district rules where applicable, or SCAQMD Rule 1168 VOC limits, as shown in Tables 5.504.4.1 and 5.504.4.2. Such products also shall comply with the Rule 1168 prohibition on the use of certain toxic compounds (chloroform, ethylene dichloride, methylene chloride, perchloroethylene and trichloroethylene), except for aerosol products as specified in subsection 2, below.

2. Aerosol adhesives, and smaller unit sizes of adhesives, and sealant or caulking compounds (in units of product, less packaging, which do not weigh more than one pound and do not consist of more than 16 fluid ounces) shall comply with statewide VOC standards and other requirements, including prohibitions on use of certain toxic compounds, of *California Code of Regulations*, Title 17, commencing with Section 94507.

TABLE 5.504.4.1 - ADHESIVE VOC LIMIT[1,2]

Less Water and Less Exempt Compounds in Grams per Liter

ARCHITECTURAL APPLICATIONS	CURRENT VOC LIMIT
INDOOR CARPET ADHESIVES	50
CARPET PAD ADHESIVES	50
OUTDOOR CARPET ADHESIVES	150
WOOD FLOORING ADHESIVES	100
RUBBER FLOOR ADHESIVES	60
SUBFLOOR ADHESIVES	50
CERAMIC TILE ADHESIVES	65
VCT & ASPHALT TILE ADHESIVES	50
DRYWALL & PANEL ADHESIVES	50
COVE BASE ADHESIVES	50
MULTIPURPOSE CONSTRUCTION ADHESIVES	70
STRUCTURAL GLAZING ADHESIVES	100
SINGLE-PLY ROOF MEMBRANE ADHESIVES	250
OTHER ADHESIVES NOT SPECIFICALLY LISTED	50
SPECIALTY APPLICATIONS	
PVC WELDING	510
CPVC WELDING	490
ABS WELDING	325
PLASTIC CEMENT WELDING	250
ADHESIVE PRIMER FOR PLASTIC	550
CONTACT ADHESIVE	80
SPECIAL PURPOSE CONTACT ADHESIVE	250
STRUCTURAL WOOD MEMBER ADHESIVE	140
TOP & TRIM ADHESIVE	250
SUBSTRATE SPECIFIC APPLICATIONS	
METAL TO METAL	30
PLASTIC FOAMS	50
POROUS MATERIAL (EXCEPT WOOD)	50
WOOD	30
FIBERGLASS	80

1. IF AN ADHESIVE IS USED TO BOND DISSIMILAR SUBSTRATES TOGETHER, THE ADHESIVE WITH THE HIGHEST VOC CONTENT SHALL BE ALLOWED.

2. FOR ADDITIONAL INFORMATION REGARDING METHODS TO MEASURE THE VOC CONTENT SPECIFIED IN THIS TABLE, SEE SOUTH COAST AIR QUALITY MANAGEMENT DISTRICT RULE 1168, www.arb.ca.gov/DRDB/SC/CURHTML/R1168.PDF

TABLE 5.504.4.2 - SEALANT VOC LIMIT

Less Water and Less Exempt Compounds in Grams per Liter

SEALANTS	CURRENT VOC LIMIT
ARCHITECTURAL	250
MARINE DECK	760
NONMEMBRANE ROOF	300
ROADWAY	250
SINGLE-PLY ROOF MEMBRANE	450
OTHER	420
SEALANT PRIMERS	
ARCHITECTURAL	
NONPOROUS	250
POROUS	775
MODIFIED BITUMINOUS	500
MARINE DECK	760
OTHER	750

NOTE: FOR ADDITIONAL INFORMATION REGARDING METHODS TO MEASURE THE VOC CONTENT SPECIFIED IN THESE TABLES, SEE SOUTH COAST AIR QUALITY MANAGEMENT DISTRICT RULE 1168.

5.504.4.3 Paints and coatings. Architectural paints and coatings shall comply with VOC limits in Table 1 of the ARB Architectural Coatings Suggested Control Measure, as shown in Table 5.504.4.3, unless more stringent local limits apply. The VOC content limit for coatings that do not meet the definitions for the specialty coatings categories listed in Table 5.504.4.3 shall be determined by classifying the coating as a Flat, Nonflat or Nonflat-High Gloss coating, based on its gloss, as defined in Subsections 4.21, 4.36 and 4.37 of the 2007 California Air Resources Board Suggested Control Measure, and the corresponding Flat, Nonflat or Nonflat-High Gloss VOC limit in Table 5.504.4.3 shall apply.

5.504.4.3.1 Aerosol Paints and coatings. Aerosol paints and coatings shall meet the PWMIR Limits for ROC in Section 94522(a)(3) and other requirements, including prohibitions on use of certain toxic compounds and ozone depleting substances, in Sections 94522(c)(2) and (d)(2) of *California Code of Regulations*, Title 17, commencing with Section 94520; and in areas under the jurisdiction of the Bay Area Air Quality Management District additionally comply with the percent VOC by weight of product limits of Regulation 8 Rule 49.

TABLE 5.504.4.3 - CONT.

GRAMS OF VOC PER LITER OF COATING, LESS WATER & LESS EXEMPT COMPOUNDS

COATING CATEGORY	CURRENT VOC LIMIT
SPECIALTY COATINGS	
ALUMINUM ROOF COATINGS	400
BASEMENT SPECIALTY COATINGS	400
BITUMINOUS ROOF COATINGS	50
BITUMINOUS ROOF PRIMERS	350
BOND BREAKERS	350
CONCRETE CURING COMPOUNDS	350
CONCRETE/MASONRY SEALERS	100
DRIVEWAY SEALERS	50
DRY FOG COATINGS	150
FAUX FINISHING COATINGS	350
FIRE RESISTIVE COATINGS	350
FLOOR COATINGS	100
FORM-RELEASE COMPOUNDS	250
GRAPHIC ARTS COATINGS (SIGN PAINTS)	500
HIGH-TEMPERATURE COATINGS	420
INDUSTRIAL MAINTENANCE COATINGS	250
LOW SOLIDS COATINGS[1]	120
MAGNESITE CEMENT COATINGS	450
MASTIC TEXTURE COATINGS	100
METALLIC PIGMENTED COATINGS	500
MULTICOLOR COATINGS	250
PRETREATMENT WASH PRIMERS	420
PRIMERS, SEALERS, & UNDERCOATERS	100
REACTIVE PENETRATING SEALERS	350
RECYCLED COATINGS	250
ROOF COATINGS	50
RUST PREVENTATIVE COATINGS	250
SHELLACS:	
CLEAR	730
OPAQUE	550
SPECIALTY PRIMERS, SEALERS & UNDERCOATERS	100
STAINS	250
STONE CONSOLIDANTS	450
SWIMMING POOL COATINGS	340
TRAFFIC MARKING COATINGS	100
TUB & TILE REFINISH COATINGS	420
WATERPROOFING MEMBRANES	250
WOOD COATINGS	275
WOOD PRESERVATIVES	350
ZINC-RICH PRIMERS	340

1. GRAMS OF VOC PER LITER OF COATING, INCLUDING WATER & EXEMPT COMPOUNDS

2. THE SPECIFIED LIMITS REMAIN IN EFFECT UNLESS REVISED LIMITS ARE LISTED IN SUBSEQUENT COLUMNS IN THE TABLE.

3. VALUES IN THIS TABLE ARE DERIVED FROM THOSE SPECIFIED BY THE CALIFORNIA AIR RESOURCES BOARD, ARCHITECTURAL COATINGS SUGGESTED CONTROL MEASURE, FEB. 1, 2008. MORE INFORMATION IS AVAILABLE FROM THE AIR RESOURCES BOARD.

5.504.4.3.2 Verification. Verification of compliance with this section shall be provided at the request of the enforcing agency. Documentation may include, but is not limited to, the following:

1. Manufacturer's product specification
2. Field verification of on-site product containers

5.504.4.4 Carpet Systems.
All carpet installed in the building interior shall meet the requirements of the California Department of Public Health, "Standard Method for the Testing and Evaluation of Volatile Organic Chemical Emissions from Indoor Sources Using Environmental Chambers." Version 1.2, January 2017 (Emission testing method for California Specifications 01350).

See California Department of Public Health's website for certification programs and testing labs.
https://www.cdph.ca.gov/Programs/CCDPHP/DEODC/EHLB/IAQ/Pages/VOC.aspx#material

5.504.4.4.1 Carpet cushion. All carpet cushion installed in the building interior shall meet the requirements of the California Department of Public Health,"Standard Method for the Testing and Evaluation of Volatile Organic Chemical Emissions from Indoor Sources Using Environmental Chambers,"Version 1.2, January 2017 (Emission testing method for California Specifications 01350).

See California Department of Public Health's website for certification programs and testing labs.
https://www.cdph.ca.gov/Programs/CCDPHP/DEODC/EHLB/IAQ/Pages/VOC.aspx#material

5.504.4.4.2 Carpet adhesive. All carpet adhesive shall meet the requirements of Table 5.504.4.1.

5.504.4.5 Composite wood products. Hardwood plywood, particleboard and medium density fiberboard composite wood products used on the interior or exterior of the buildings shall meet the requirements for formaldehyde as specified in ARB's Air Toxics Control Measure (ATCM) for Composite Wood (17 CCR 93120 et seq.). Those materials not exempted under the ATCM must meet the specified emission limits, as shown in Table 5.504.4.5.

5.504.4.5.3 Documentation. Verification of compliance with this section shall be provided as requested by the enforcing agency. Documentation shall include at least one of the following:

1. Product certifications and specifications.
2. Chain of custody certifications.
3. Product labeled and invoiced as meeting the Composite Wood Products regulation (see CCR, Title 17, Section 93120, et seq.).
4. Exterior grade products marked as meeting the PS-1 or PS-2 standards of the Engineered Wood Association, the Australian AS/NZS 2269 or European 636 3S standards.
5. Other methods acceptable to the enforcing agency.

TABLE 5.504.4.5 - FORMALDEHYDE LIMITS[1]

MAXIMUM FORMALDEHYDE EMISSIONS IN PARTS PER MILLION

PRODUCT	CURRENT LIMIT
HARDWOOD PLYWOOD VENEER CORE	0.05
HARDWOOD PLYWOOD COMPOSITE CORE	0.05
PARTICLE BOARD	0.09
MEDIUM DENSITY FIBERBOARD	0.11
THIN MEDIUM DENSITY FIBERBOARD[2]	0.13

1. VALUES IN THIS TABLE ARE DERIVED FROM THOSE SPECIFIED BY THE CALIFORNIA AIR RESOURCES BOARD, AIR TOXICS CONTROL MEASURE FOR COMPOSITE WOOD AS TESTED IN ACCORDANCE WITH ASTM E 1333. FOR ADDITIONAL INFORMATION, SEE CALIFORNIA CODE OF REGULATIONS, TITLE 17, SECTIONS 93120 THROUGH 93120.12.

2. THIN MEDIUM DENSITY FIBERBOARD HAS A MAXIMUM THICKNESS OF 5/16 INCHES (8 MM).

5.504.4.6 Resilient flooring systems. Where resilient flooring is installed, at least 80 percent of floor area receiving resilient flooring shall meet the requirements of the California Department of Public Health,"Standard Method for the Testing and Evaluation of Volatile Organic Chemical Emissions from Indoor Sources Using Environmental Chambers," Version 1.2, January 2017 (Emission testing method for California Specifications 01350)

See California Department of Public Health's website for certification programs and testing labs.
https://www.cdph.ca.gov/Programs/CCDPHP/DEODC/EHLB/IAQ/Pages/VOC.aspx#material

5.504.4.6.1 Verification of compliance. Documentation shall be provided verifying that resilient flooring materials meet the pollutant emission limits.

5.504.4.7 Thermal insulation
Comply with the requirements of the California Department of Public Health, "Standard Method of the Testing and Evaluation of Volatile Organic Chemical Emissions from Indoor Sources Using Environmental Chambers, "Version 1.2, January 1.2, January 2017 (Emission testing method for California Specification 01350).
See California Department of Public Health's website for certification programs and testing labs.
https://www.cdph.ca.gov/Programs/CCDPHP/DEODC/EHLB/IAQ/Pages/VOC.aspx#material

5.504.4.7.1 Verification of compliance.
Documentation shall be provided verifying that thermal insulation materials meet the pollutant emission limits.

5.504.4.8 Acoustical ceiling and wall panels.
Comply with the requirements of the California Department of Public Health, "Standard Method for the Testing and Evaluation of Volatile Organic Chemical Emissions from Indoor Sources Using Environmental Chambers, "Version 1.2, January 2017 (Emission testing method for California Specification 01350).
See California Department of Public Health's website for certification programs and testing labs.

5.504.4.8.1 Verification of compliance. Documentation shall be provided verifying that acoustical finish materials meet the pollutant emission limits.

5.504.5.3 Filters. In mechanically ventilated buildings, provide regularly occupied areas of the building with air filtration media for outside and return air that provides at least a Minimum Efficiency Reporting Value (MERV) of 13. MERV 13 filters shall be installed prior to occupancy, and recommendations for maintenance with filters of the same value shall be included in the operation and maintenance manual.

Exceptions: Existing mechanical equipment.

5.504.5.3.1 Labeling. Installed filters shall be clearly labeled by the manufacturer indicating the MERV rating.

5.504.7 ENVIRONMENTAL TOBACCO SMOKE (ETS) CONTROL. Where outdoor areas are provided for smoking, prohibit smoking within 25 feet of building entries, outdoor air intakes and operable windows and within the building as already prohibited by other laws or regulations; or as enforced by ordinances, regulations or policies of any city, county, city and county, California Community College, campus of the California State University, or campus of the University of California, whichever are more stringent. When ordinances, regulations or policies are not in place, post signage to inform building occupants of the prohibitions.

SECTION 5.505 INDOOR MOISTURE CONTROL

5.505.1 INDOOR MOISTURE CONTROL. Buildings shall meet or exceed the provisions of California Building Code, CCR, Title 24, Part 2, Sections 1202 (Ventilation) and Chapter 14 (Exterior Walls). For additional measures, see Section 5.407.2 of this code.

SECTION 5.506 INDOOR AIR QUALITY

5.506.1 OUTSIDE AIR DELIVERY. For mechanically or naturally ventilated spaces in buildings, meet the minimum requirements of Section 120.1 (Requirements For Ventilation) of the *California Energy Code*, or the applicable local code, whichever is more stringent, and Division 1, Chapter 4 of CCR, Title 8.

5.506.2 CARBON DIOXIDE (CO_2) MONITORING. For buildings or additions equipped with demand control ventilation, CO_2 sensors and ventilation controls shall be specified and installed in accordance with the requirements of the California Energy Code, Section 120(c)(4).

5.506.3 Carbon dioxide (CO2) monitoring in classrooms.
(DSA-SS) Each public K-12 school classroom, as listed in Table 120.1-A of the *California Energy Code*, shall be equipped with a carbon dioxide monitor or sensor that meets the following requirements:

1. The monitor or sensor shall be permanently affixed in a tamper-proof manner in each classroom between 3 and 6 feet (914 mm and 1829 mm) above the floor and at least 5 feet (1524 mm) away from door and operable windows.
2. When the monitor or sensor is not integral to an Energy Management Control System (EMCS), the monitor or sensor shall display the carbon dioxide readings on the device. When the sensor is integral to an EMCS, the carbon dioxide readings shall be available to and regularly monitored by facility personnel.
3. A monitor shall provide notification though a visual indicator on the monitor when the carbon dioxide levels in the classroom have exceeded 1,100ppm. A sensor integral to an EMCS shall provide notification to facility personnel through a visual and/or audible indicator when the carbon dioxide levels in the classroom have exceeded 1,100ppm.
4. The monitor or sensor shall measure carbon dioxide levels at minimum 15- minute intervals and shall maintain a record of previous carbon dioxide measurements of not less than 30 days duration.
5. The monitor or sensor used to measure carbon dioxide levels shall have the capacity to measure carbon dioxide levels with a range of 400ppm to 2000ppm or greater.
6. The monitor or sensor shall be certified by the manufacturer to be accurate within 75ppm at 1,000ppm carbon dioxide concentration and shall be certified by the manufacturer to require calibration no more frequently than once every 5 years.

SECTION 5.507 ENVIRONMENTAL COMFORT

5.507.4 ACOUSTICAL CONTROL. Employ building assemblies and components with Sound Transmission Class (STC) values determined in accordance with ASTM E 90 and ASTM E 413, or Outdoor-Indoor Sound Transmission Class (OITC) determined in accordance with ASTM E 1332, using either the prescriptive or performance method in Section 5.507.4.1 or 5.507.4.2.

Exception: Buildings with few or no occupants or where occupants are not likely to be affected by exterior noise, as determined by the enforcement authority, such as factories, stadiums, storage, enclosed parking structures and utility buildings.

Exception: [DSA-SS] For public schools and community colleges, the requirements of this section and all subsections apply only to new construction.

5.507.4.1 Exterior noise transmission, prescriptive method. Wall and roof-ceiling assemblies exposed to the noise source making up the building or addition envelope or altered envelope shall meet a composite STC rating of at least 50 or a composite OITC rating of no less than 40, with exterior windows of a minimum STC of 40 or OITC of 30 in the following locations:

1. Within the 65 CNEL noise contour of an airport.

   Exceptions:

   1. L_{dn} or CNEL for military airports shall be determined by the facility Air Installation Compatible Land Use Zone (AICUZ) plan.
   2. L_{dn} or CNEL for other airports and heliports for which a land use plan has not been developed shall be determined by the local general plan noise element.

2. Within the 65 CNEL or L_{dn} noise contour of a freeway or expressway, railroad, industrial source or fixed-guideway source as determined by the Noise Element of the General Plan.

5.507.4.1.1. Noise exposure where noise contours are not readily available. Buildings exposed to a noise level of 65 dB L_{eq} - 1-hr during any hour of operation shall have building, addition or alteration exterior wall and roof-ceiling assemblies exposed to the noise source meeting a composite STC rating of at least 45 (or OITC 35), with exterior windows of a minimum STC of 40 (or OITC 30).

5.507.4.2 Performance Method. For buildings located as defined in Section 5.507.4.1 or 5.507.4.1.1, wall and roof-ceiling assemblies exposed to the noise source making up the building or addition envelope or altered envelope shall be constructed to provide an interior noise environment attributable to exterior sources that does not exceed an hourly equivalent noise level (Leq-1Hr) of 50 dBA in occupied areas during any hour of operation.

5.507.4.2.1 Site Features. Exterior features such as sound walls or earth berms may be utilized as appropriate to the building, addition or alteration project to mitigate sound migration to the interior.

5.507.4.2.2 Documentation of Compliance. An acoustical analysis documenting complying interior sound levels shall be prepared by personnel approved by the architect or engineer of record.

5.507.4.3 Interior sound transmission. Wall and floor-ceiling assemblies separating tenant spaces and tenant spaces and public places shall have an STC of at least 40.

Note: Examples of assemblies and their various STC ratings may be found at the California Office of Noise Control: www.toolbase.org/PDF/CaseStudies/stc_icc_ratings.pdf.

SECTION 5.508 OUTDOOR AIR QUALITY

5.508.1 Ozone depletion and greenhouse gas reductions. Installations of HVAC, refrigeration and fire suppression equipment shall comply with Sections 5.508.1.1 and 5.508.1.2.

5.508.1.1 Chlorofluorocarbons (CFCs). Install HVAC, refrigeration and fire suppression equipment that do not contain CFCs.

5.508.1.2 Halons. Install HVAC, refrigeration and fire suppression equipment that do not contain Halons.

5.508.2 Supermarket refrigerant leak reduction. New commercial refrigeration systems shall comply with the provisions of this section when installed in retail food stores 8,000 square feet or more conditioned area, and that utilize either refrigerated display cases, or walk-in coolers or freezers connected to remote compressor units or condensing units. The leak reduction measures apply to refrigeration systems containing high-global-warming potential (high-GWP) refrigerants with a GWP of 150 or greater. New refrigeration systems include both new facilities and the replacement of existing refrigeration systems in existing facilities.

Exception: Refrigeration systems containing low-global warming potential (low-GWP) refrigerant with a GWP value less than 150 are not subject to this section. Low-GWP refrigerants are nonozone-depleting refrigerants that include ammonia, carbon dioxide (CO_2), and potentially other refrigerants.

5.508.2.1 Refrigerant piping. Piping compliant with the California Mechanical Code shall be installed to be accessible for leak protection and repairs. Piping runs using threaded pipe, copper tubing with an outside diameter (OD) less than 1/4 inch, flared tubing connections and short radius elbows shall not be used in refrigerant systems except as noted below.

5.508.2.1.1 Threaded pipe. Threaded connections are permitted at the compressor rack.

5.508.2.1.2 Copper pipe. Copper tubing with an OD less than 1/4 inch may be used in systems with a refrigerant charge of 5 pounds or less.

5.508.2.1.2.1 Anchorage. One-fouth-inch OD tubing shall be securely clamped to a rigid base to keep vibration levels below 8 mils.

5.508.2.1.3 Flared tubing connections. Double-flared tubing connections may be used for pressure controls, valve pilot lines and oil.

Exception: Single-flared tubing connections may be used with a multiring seal coated with industrial sealant suitable for use with refrigerants and tightened in accordance with manufacturer's recommendations.

5.508.2.1.4 Elbows. Short radius elbows are only permitted where space limitations prohibit use of long radius elbows.

5.508.2.2 Valves. Valves Valves and fittings shall comply with the *California Mechanical Code* and as follows.

5.508.2.2.1 Pressure relief valves. For vessels containing high-GWP refrigerant, a rupture disc shall be installed between the outlet of the vessel and the inlet of the pressure relief valve.

5.508.2.2.1.1 Pressure detection. A pressure gauge, pressure transducer or other device shall be installed in the space between the rupture disc and the relief valve inlet to indicate a disc rupture or discharge of the relief valve.

5.508.2.2.2 Access valves. Only Schrader access valves with a brass or steel body are permitted for use.

5.508.2.2.2.1 Valve caps. For systems with a refrigerant charge of 5 pounds or more, valve caps shall be brass or steel and not plastic.

5.508.2.2.2.2 Seal caps. If designed for it, the cap shall have a neoprene O-ring in place.

5.508.2.2.2.2.1 Chain tethers. Chain tethers to fit ovr the stem are required for valves designed to have seal caps.

Exception: Valves with seal caps that are not removed from the valve during stem operation.

5.508.2.3 Refrigerated service cases. Refrigerated service cases holding food products containing vinegar and salt shall have evaporator coils of corrosion-resistant material, such as stainless steel; or be coated to prevent corrosion from these substances.

5.508.2.3.1 Coil coating. Consideration shall be given to the heat transfer efficiency of coil coating to maximize energy efficiency.

5.508.2.4 Refrigerant receivers. Refrigerant receivers with capacities greater than 200 pounds shall be fitted with a device tha indicates the level of refrigerant in the receiver.

5.508.2.5 Pressure testing. The system shall be pressure tested during installation prior to evacuation and charging.

5.508.2.5.1 Minimum pressure. The system shall be charged with regulated dry nitrogen and appropriate tracer gas to bring system pressure up to 300 psig minimum.

5.508.2.5.2 Leaks. Check the system for leaks, repair any leaks, and retest for pressure using the same gauge.

5.508.2.5.3 Allowable pressure change. The system shall stand, unaltered, for 24 hours with no more than a +/- one pound pressure change from 300 psig, measured with the same gauge.

5.508.2.6 Evacuation. The system shall be evacuated after pressure testing and prior to charging.

5.508.2.6.1 First vacuum. Pull a system vacuum down to at least 1000 microns (+/- 50 microns), and hold for 30 minutes.

5.508.2.6.2 Second vacuum. Pull a second system vacuum to a minimum of 500 microns and hold for 30 minutes.

5.508.2.6.3 Third vacuum. Pull a third vacuum down to a minimum of 300 microns, and hold for 24 hours with a maximum drift of 100 microns over a 24-hour period.

CHAPTER 7
INSTALLER & SPECIAL INSPECTOR QUALIFICATIONS

702 QUALIFICATIONS

702.1 INSTALLER TRAINING. HVAC system installers shall be trained and certified in the proper installation of HVAC systems including ducts and equipment by a nationally or regionally recognized training or certification program. Uncertified persons may perform HVAC installations when under the direct supervision and responsibility of a person trained and certified to install HVAC systems or contractor licensed to install HVAC systems. Examples of acceptable HVAC training and certification programs include but are not limited to the following:

1. State certified apprenticeship programs.
2. Public utility training programs.
3. Training programs sponsored by trade, labor or statewide energy consulting or verification organizations.
4. Programs sponsored by manufacturing organizations.
5. Other programs acceptable to the enforcing agency.

702.2 SPECIAL INSPECTION [HCD]. When required by the enforcing agency, the owner or the responsible entity acting as the owner's agent shall employ one or more special inspectors to provide inspection or other duties necessary to substantiate compliance with this code. Special inspectors shall demonstrate competence to the satisfaction of the enforcing agency for the particular type of inspection or task to be performed. In addition to other certifications or qualifications acceptable to the enforcing agency, the following certifications or education may be considered by the enforcing agency when evaluating the qualifications of a special inspector:

1. Certification by a national or regional green building program or standard publisher.
2. Certification by a statewide energy consulting or verification organization, such as HERS raters, building performance contractors, and home energy auditors.
3. Successful completion of a third party apprentice training program in the appropriate trade.
4. Other programs acceptable to the enforcing agency.

Notes:

1. Special inspectors shall be independent entities with no financial interest in the materials or the project they are inspecting for compliance with this code.
2. HERS raters are special inspectors certified by the California Energy Commission (CEC) to rate homes in California according to the Home Energy Rating System (HERS).

[BSC-CG] When required by the enforcing agency, the owner or the responsible entity acting as the owner's agent shall employ one or more special inspectors to provide inspection or other duties necessary to substantiate compliance with this code. Special inspectors shall demonstrate competence to the satisfaction of the enforcing agency for the particular type of inspection or task to be performed. In addition, the special inspector shall have a certification from a recognized state, national or international association, as determined by the local agency. The area of certification shall be closely related to the primary job function, as determined by the local agency.

Note: Special inspectors shall be independent entities with no financial interest in the materials or the project they are inspecting for compliance with this code.

703 VERIFICATIONS

703.1 DOCUMENTATION. Documentation used to show compliance with this code shall include but is not limited to, construction documents, plans, specifications, builder or installer certification, inspection reports, or other methods acceptable to the enforcing agency which demonstrate substantial conformance. When specific documentation or special inspection is necessary to verify compliance, that method of compliance will be specified in the appropriate section or identified applicable checklist.

FOR BUILDING ONLY - NOT FOR CONSTRUCTION

FUHRMAN LEAMY
LAND GROUP
DESIGN • SERVICE • SOLUTIONS
3400 DOUGLAS BLVD, SUITE 275
ROSEVILLE, CALIFORNIA 95661
916.783.5263 • FLLANDGROUP.COM

JOB NO. : CRV- 25027

CITY OF ROSEVILLE APPROVAL

PROJECT:
JM-52 PARK

5097 MISTY RIDGE DRIVE
ROSEVILLE, CA

CLIENT:
CITY OF ROSEVILLE

REVISIONS	DATE
1	
2	
3	
4	

ISSUE		DATE
1	1ST SUBMITTAL	9.05.2025
2	2ND SUBMITTAL	10.08.2025
3	3RD SUBMITTAL	11.21.2025
4	4TH SUBMITTAL	1.28.2026
5		

REGISTERED LANDSCAPE ARCHITECT
KEVIN C. LEAMY
No. 4965
Re-Issue
12/31/26
Renewal Date
1.15.2026
Date
STATE OF CALIFORNIA

DRAWN : AM
CHECKED : KCL
SCALE: : AS SHOWN

SHEET TITLE:
CAL GREEN DOCUMENTATION

SHEET
CV-2.0C
4 OF 30 SHEETS

DISCLAIMER:THIS DOCUMENT IS PROVIDED AND INTENDED TO BE USED AS A MEANS TO INDICATE AREAS OF COMPLIANCE WITH THE CALIFORNIA GREEN BUILDING STANDARDS (CALGREEN) CODE. DUE TO THE VARIABLES BETWEEN BUILDING DEPARTMENT JURISDICTIONS, THIS CHECKLIST IS TO BE USED ON AN INDIVIDUAL PROJECT BASIS AND MAY BE MODIFIED BY THE END USER TO MEET THOSE INDIVIDUAL NEEDS. THE END USER ASSUMES ALL RESPONSIBILITY ASSOCIATED WITH THE USE OF THIS DOCUMENT, INCLUDING VERIFICATION WITH THE FULL CODE.

FUHRMAN LEAMY LAND GROUP HEREBY EXPRESSLY RESERVES ITS COMMON LAW COPYRIGHT AND OTHER PROPERTY RIGHTS IN THESE PLANS. THESE PLANS AND DRAWINGS ARE NOT TO BE REPRODUCED, CHANGED OR COPIED IN ANY FORM OR MANNER WHATSOEVER WITHOUT FIRST OBTAINING THE EXPRESS WRITTEN PERMISSION OF FUHRMAN LEAMY LAND GROUP NOR ARE THEY TO BE ASSIGNED TO ANY THIRD PARTY WITHOUT FIRST OBTAINING WRITTEN PERMISSION AND CONSENT.

FUHRMAN LEAMY LAND GROUP HEREBY EXPRESSLY RESERVES ITS COMMON LAW COPYRIGHT AND OTHER PROPERTY RIGHTS IN THESE PLANS. THESE PLANS AND DRAWINGS ARE NOT TO BE REPRODUCED, CHANGED OR COPIED IN ANY FORM OR MANNER WHATSOEVER WITHOUT FIRST OBTAINING THE EXPRESS WRITTEN PERMISSION OF FUHRMAN LEAMY LAND GROUP NOR ARE THEY TO BE ASSIGNED TO ANY THIRD PARTY WITHOUT FIRST OBTAINING WRITTEN PERMISSION AND CONSENT.

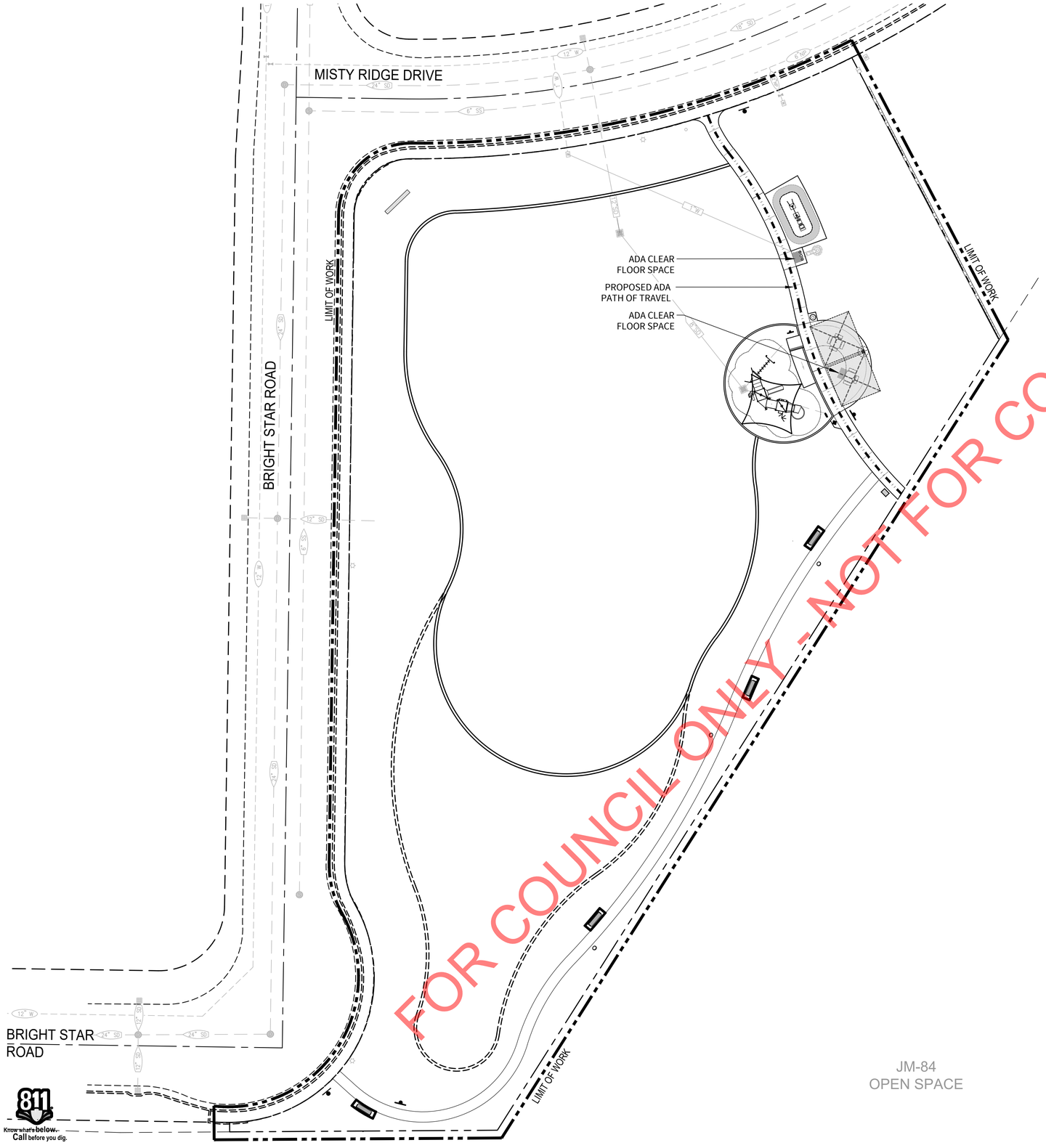

FOR COUNCIL ONLY - NOT FOR CONSTRUCTION

CITY OF ROSEVILLE ACCESSIBILITY NOTES:

1. ACCESSIBLE PATHS OF TRAVEL SHALL HAVE WALKING SURFACES NOT STEEPER THAN 1:20 AND THE CROSS SLOPES OF THESE SURFACES SHALL NOT EXCEED 1:48. REFERENCE CBC SEC. 11B-403.3.

2. SIDEWALKS SHALL BE A MINIMUM OF 48 INCHES WIDE. REFERENCE CBC SEC. 11B-403.5.

SCALE: 1" = 20'-0"

0' 20' 80'

10' 40'

FUHRMAN LEAMY
LAND GROUP
DESIGN • SERVICE • SOLUTIONS

3400 DOUGLAS BLVD, SUITE 275
ROSEVILLE, CALIFORNIA 95661
916.783.5263 • FLLANDGROUP.COM

JOB NO. : CRV- 25027

CITY OF ROSEVILLE APPROVAL

PROJECT:

JM-52 PARK

5097 MISTY RIDGE DRIVE
ROSEVILLE, CA

CLIENT:
CITY OF ROSEVILLE

REVISIONS	DATE
△	
△	
△	
△	

ISSUE		DATE
1	1ST SUBMITTAL	9.05.2025
2	2ND SUBMITTAL	10.08.2025
3	3RD SUBMITTAL	11.21.2025
4	4TH SUBMITTAL	1.28.2026
5		

REGISTERED LANDSCAPE ARCHITECT
KEVIN C. LEAMY
No. 4965
12/31/26
Renewal Date
1.15.2026
Date
STATE OF CALIFORNIA

DRAWN : AM
CHECKED : KCL
SCALE: : 1"=20'-0"

SHEET TITLE:

SITE ACCESSIBILITY PLAN

SHEET

SA-1.0

5 OF 30 SHEETS

FUHRMAN LEAMY LAND GROUP HEREBY EXPRESSLY RESERVES ITS COMMON LAW COPYRIGHT AND OTHER PROPERTY RIGHTS IN THESE PLANS. THESE PLANS AND DRAWINGS ARE NOT TO BE REPRODUCED, CHANGED, OR COPIED IN ANY FORM OR MANNER WHATSOEVER WITHOUT FIRST OBTAINING THE EXPRESS WRITTEN PERMISSION OF FUHRMAN LEAMY LAND GROUP NOR ARE THEY TO BE ASSIGNED TO ANY THIRD PARTY WITHOUT FIRST OBTAINING WRITTEN PERMISSION AND CONSENT.

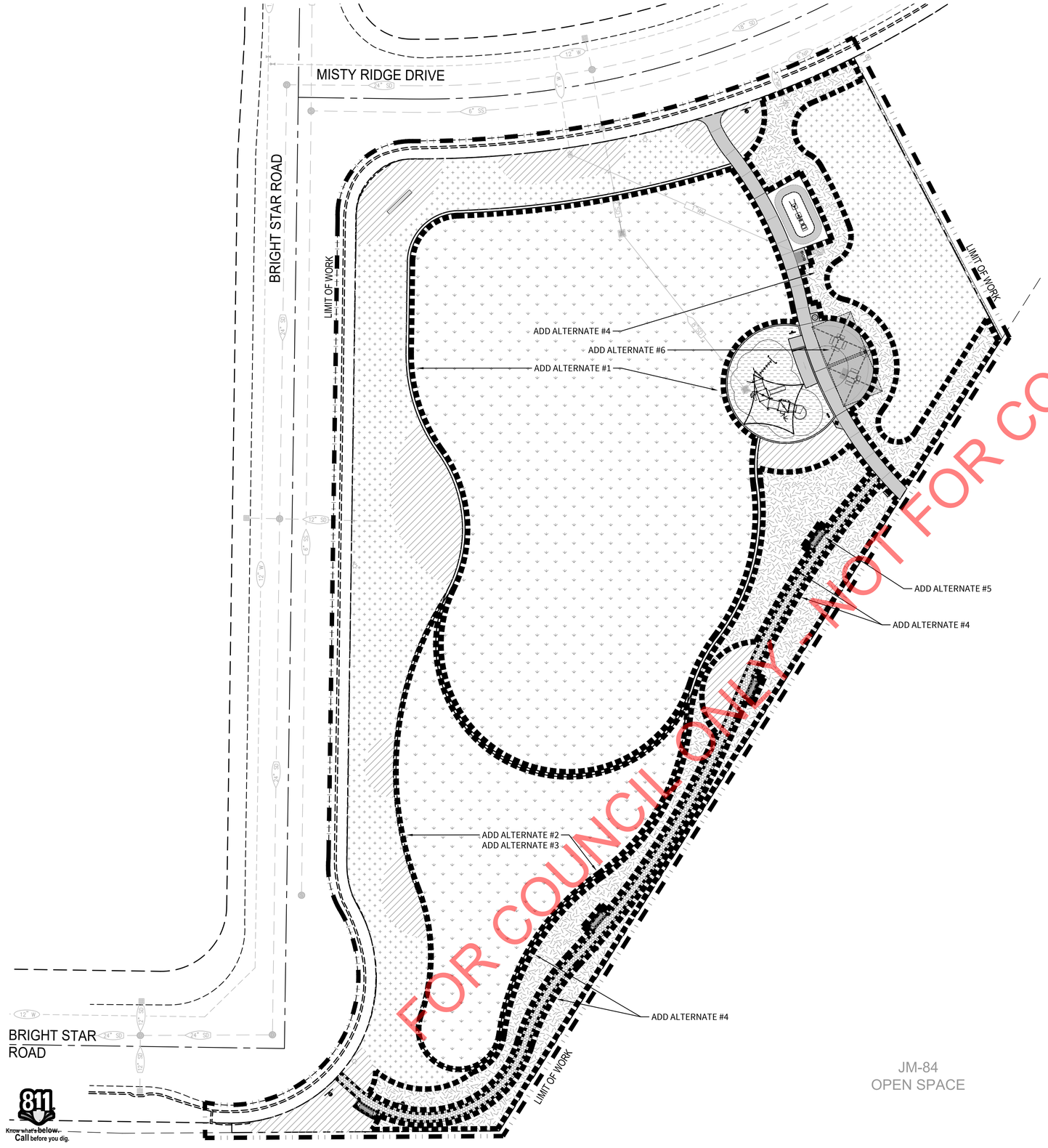

NOT FOR CONSTRUCTION
FOR COUNCIL ONLY

JM-84
OPEN SPACE

LEGEND:

- CURRENT PHASE LIMIT OF WORK
- ADD ALTERNATE LIMIT OF WORK
- ADD ALTERNATE LIMIT OF WORK - NATURE TRAIL

ADD ALTERNATE #1: SODDED TURF AREA.
BASE BID: SEEDED TURF

ADD ALTERNATE #2: SEEDED TURF AREA W/CONCRETE MOWSTRIP.
BASE BID: HYDROSEED & PLANTING POCKETS W/BARK MULCH.

ADD ALTERNATE #3: SODDED TURF AREA W/CONCRETE MOWSTRIP.
BASE BID: HYDROSEED & PLANTING POCKETS W/BARK MULCH.

ADD ALTERNATE #4: BARK MULCH ONLY BUFFER.
BASE BID: HYDROSEED & PLANTING POCKETS W/BARK MULCH.

ADD ALTERNATE #5: CONCRETE NATURE TRAIL.
BASE BID: DIRT TRAIL CUT IN AFTER HYDROSEED ESTABLISHMENT.

ADD ALTERNATE #6: ENGINEERED SHADE SAIL STRUCTURE.
BASE BID: NO SHADE SAIL

- PROPOSED TURF
- PROPOSED SHRUB AND GROUNDCOVER & BARK MULCH
- PROPOSED DIRT NATURE TRAIL
- PROPOSED PEDESTRIAN LOAD CONCRETE
- PROPOSED ENGINEERED WOOD FIBAR
- PROPOSED HYDROSEED & TREES
- PROPOSED BARK MULCH ONLY AREAS

SCALE: 1" = 20'-0"
0' 20' 80'
10' 40'

FUHRMAN LEAMY
LAND GROUP
DESIGN • SERVICE • SOLUTIONS
3400 DOUGLAS BLVD, SUITE 275
ROSEVILLE, CALIFORNIA 95661
916.783.5263 • FLLANDGROUP.COM

JOB NO. : CRV- 25027

CITY OF ROSEVILLE APPROVAL

PROJECT:
JM-52 PARK

5097 MISTY RIDGE DRIVE
ROSEVILLE, CA

CLIENT:
CITY OF ROSEVILLE

REVISIONS	DATE
△	
△	
△	
△	

ISSUE		DATE
1	1ST SUBMITTAL	9.05.2025
2	2ND SUBMITTAL	10.08.2025
3	3RD SUBMITTAL	11.21.2025
4	4TH SUBMITTAL	1.28.2026
5		

REGISTERED LANDSCAPE ARCHITECT
KEVIN C. LEAMY
No. 4965
12/31/26
Renewal Date
1.15.2026
Date
STATE OF CALIFORNIA

DRAWN : AM
CHECKED : KCL
SCALE: : 1"=20'-0"

SHEET TITLE:
SCOPE OF WORK PLAN

SHEET
SW-1.0
6 OF 30 SHEETS

FUHRMAN LEAMY LAND GROUP HEREBY EXPRESSLY RESERVES ITS COMMON LAW COPYRIGHT AND OTHER PROPERTY RIGHTS IN THESE PLANS. THESE PLANS AND DRAWINGS ARE NOT TO BE REPRODUCED, CHANGED OR COPIED IN ANY FORM OR MANNER WHATSOEVER WITHOUT FIRST OBTAINING THE EXPRESS WRITTEN PERMISSION OF FUHRMAN LEAMY LAND GROUP NOR ARE THEY TO BE ASSIGNED TO ANY THIRD PARTY WITHOUT FIRST OBTAINING WRITTEN PERMISSION AND CONSENT.

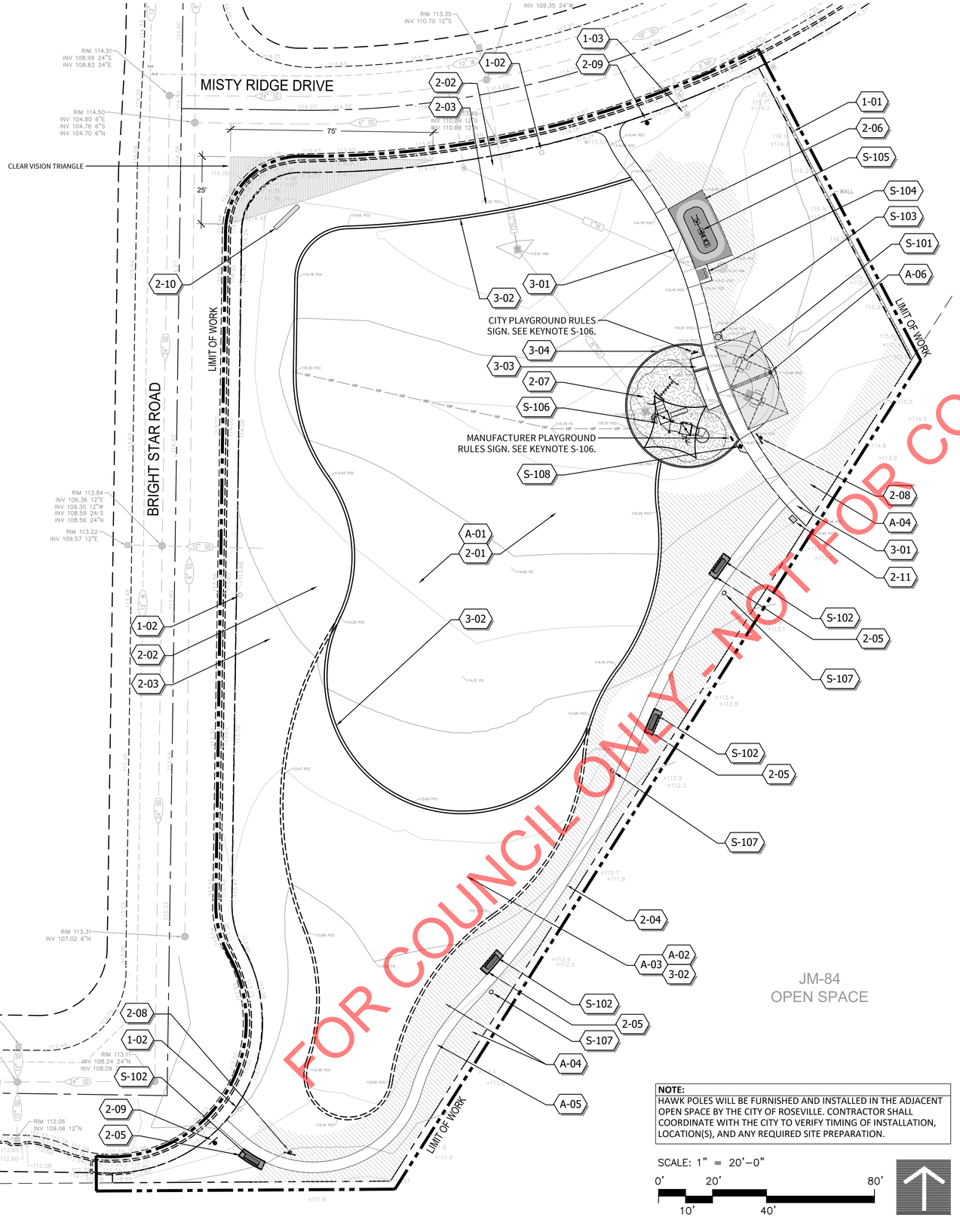

FOR COUNCIL ONLY - NOT FOR CONSTRUCTION

NOTE:
HAWK POLES WILL BE FURNISHED AND INSTALLED IN THE ADJACENT OPEN SPACE BY THE CITY OF ROSEVILLE. CONTRACTOR SHALL COORDINATE WITH THE CITY TO VERIFY TIMING OF INSTALLATION, LOCATION(S), AND ANY REQUIRED SITE PREPARATION.

SCALE: 1" = 20'-0"

0' 20' 80'
10' 40'

811 Know what's below. Call before you dig.

CONSTRUCTION KEYNOTES

CODE	DESCRIPTION	DETAIL
1 - GENERAL KEYNOTES		
1-01	EXISTING WALL TO REMAIN. VERIFY IN FIELD. PROTECT IN PLACE.	--
1-02	EXISTING STREET LIGHT. VERIFY IN FIELD. PROTECT IN PLACE.	--
1-03	EXISTING RECYCLED WATER POINT OF CONNECTION FOR IRRIGATION SERVICE. VERIFY LOCATION IN FIELD.	--
2 - SITE KEYNOTES		
2-01	PROPOSED SEEDED TURF AREA. SEE PLANTING PLANS.	--
2-02	PROPOSED PLANTING AREA. SEE PLANTING PLANS.	--
2-03	PROPOSED HYDROSEED AREA. SEE PLANTING PLANS.	--
2-04	PROVIDE DIRT NATURE TRAIL PER CITY OF ROSEVILLE PARKS CONSTRUCTION STDS. NOTE: FINAL NATURE TRAIL ALIGNMENT TO BE CONFIRMED BY CITY OF ROSEVILLE PARKS STAFF IN THE FIELD. CONTRACTOR TO CUT HYDROSEED PER FINAL TRAIL ALIGNMENT.	--
2-05	PROVIDE DECOMPOSED GRANITE PAD AT BENCHES PER CITY OF ROSEVILLE PARKS CONSTRUCTION STANDARDS. SEE DETAIL.	F/LC-2.0
2-06	PROVIDE DECOMPOSE GRANITE PAVING AT FITNESS STATION PER CITY OF ROSEVILLE PARKS CONSTRUCTION STANDARDS.	F/LC-2.0
2-07	PROVIDE ENGINEERED WOOD FIBAR AT PLAY AREA PER CITY OF ROSEVILLE PARKS CONSTRUCTION STANDARDS.	--
2-08	PROVIDE SCAVENGER HUNT SIGN PER CITY OF ROSEVILLE PARKS AND CONSTRUCTION STDS. TYPICAL OF 2. NOTE: FINAL GRAPHIC PANEL TO BE PROVIDED BY CITY OF ROSEVILLE.	--
2-09	PROVIDE RECYCLED WATER SIGN. TYPICAL OF 2.	J/LC-2.0
2-10	PROVIDE PARK SIGN PER CITY OF ROSEVILLE PARKS CONSTRUCTION STANDARDS.	H/LC-2.0
2-11	PROVIDE INFOGRAPHIC SIGN PER CITY OF ROSEVILLE PARKS CONSTRUCTION STANDARDS. TYPICAL OF 1. NOTE: FINAL GRAPHIC PANEL TO BE PROVIDED BY CITY OF ROSEVILLE.	--
3 - CONCRETE KEY NOTES		
3-01	PROVIDE PEDESTRIAN LOAD CONCRETE WALKS WITHIN PARK INTERIOR PER THE CITY OF ROSEVILLE PARKS CONSTRUCTION STANDARDS.	A/LC-2.0
3-02	PROVIDE CONCRETE MOWBAND PER CITY OF ROSEVILLE PARKS CONSTRUCTION STDS.	C/LC-2.0
3-03	PROVIDE CONCRETE PLAY AREA ACCESS WALK INTO PLAY AREAS PER CITY OF ROSEVILLE PARKS CONSTRUCTION STANDARDS.	E/LC-2.0
3-04	PROVIDE CONCRETE PLAY AREA CURB PER CITY OF ROSEVILLE PARKS CONST. STDS.	D/LC-2.0
SITE FURNISHINGS		
S-101	PROVIDE 4' SQUARE PICNIC TABLE PER MANUFACTURER SPECIFICATIONS AND CITY OF ROSEVILLE PARKS CONSTRUCTION STANDARDS. TYPICAL OF (1) STANDARD TABLES (4-SEATS) & (1) ADA TABLES (3-SEATS). MANUFACTURER: MYTCOAT OR APPROVED EQUAL MODEL: TSQ46-B-13-000 & TSQ46-B-15-013 (ADA) (PUNCHED STEEL - SURFACE MOUNT) COLOR: AS SELECTED BY CITY CONTACT: GLEN WURSTER W/ALL ABOUT PLAY @ 916.923.2180	G/LC-2.0
S-102	PROVIDE 6' BENCH PER MANUFACTURER SPECIFICATIONS AND CITY OF ROSEVILLE PARKS CONSTRUCTION STANDARDS. TYPICAL OF 4. MANUFACTURER: MYTCOAT OR APPROVED EQUAL MODEL: BRT06-B-19-000 (6' BENCH W/BACK - PUNCHED STEEL - IN-GROUND MOUNT) COLOR: AS SELECTED BY CITY CONTACT: GLEN WURSTER W/ALL ABOUT PLAY @ 916.923.2180	G/LC-2.0
S-103	PROVIDE TRASH RECEPTACLE PER CITY OF ROSEVILLE PARKS CONSTRUCTION STANDARDS. TYPICAL OF 1. MANUFACTURER: MY-T-COAT OR APPROVED EQUAL MODEL: RDW32-H-02-000 (DOWNTOWN W/SIDE OPENING, SLATTED STEEL, INDUSTRY STANDARD COATING, SURFACE MOUNT) COLOR: AS SELECTED BY CITY CONTACT: GLEN WURSTER W/ALL ABOUT PLAY @ 916.923.2180	--
S-104	PROVIDE DRINKING FOUNTAIN WITH BOTTLE FILLER AND RECESSED HOSE BIBB PER CITY OF ROSEVILLE PARKS CONSTRUCTION STANDARDS. SEE DETAIL. MANUFACTURER: MOST DEPENDABLE FOUNTAINS OR APPROVED EQUAL MODEL: 10145 SMFA (FRONT APPRAOCH) COLOR: AS SELECTED BY CITY WATER & SEWER CONNECTION: SEE CIVIL PLANS, THIS SET.	I/LC-2.0
S-105	PROVIDE FITNESS EQUIPMENT PER MANUFACTURER SPECIFICATIONS. MANUFACTURER: GREENFIELD OUTDOOR SYSTEMS OR APPROVED EQUAL MODEL: SGR071 (3-PERSON STATIC COMBO) COLOR: AS SELECTED BY CITY CONTACT: GLEN WURSTER W/ALL ABOUT PLAY @ 916.923.2180	--
S-106	PROVIDE 2-12 PLAYGROUND ASSEMBLY PER MANUFACTURER`S SPECIFICATIONS. MANUFACTURER: LITTLE TIKES MODEL: CUSTOM COLOR: AS SELECTED BY CITY CONTACT: GLEN WURSTER W/ALL ABOUT PLAY @ 916.923.2180 NOTE: CONTRACTOR TO PROVIDE CITY PLAYGROUND RULES SIGN PER CITY OF ROSEVILLE PARKS CONSTRUCTION STANDARDS AND MANUFACTURER PLAYGROUND RULES SIGN. SEE PLAN FOR LOCATION.	--
S-107	PROVIDE ACORN SEATS PER MANUFACTURER`S SPECIFICATIONS. TYPICAL OF 3. MANUFACTURER: LANDSCAPE STRUCTURES MODEL: 186579 ACORN SEAT CONTACT: NICOLE NOWAK W/ROSS RECREATION @ 707.538.3800	--
S-108	PROVIDE SECURITY LIGHT PER CITY OF ROSEVILLE PARKS CONSTRUCTION STANDARDS. TYPICAL OF 1. SEE ELECTRICAL SHEETS.	K/LC-2.0
ADD ALTERNATE KEYNOTES: SEE SCOPE OF WORK PLAN (SW-1.0)		
A-01	**ADD ALTERNATE #1:** PROVIDE SODDED TURF AREA PER CITY OF ROSEVILLE PARKS CONSTRUCTION STANDARDS. SEE PLANTING PLANS.	--
A-02	**ADD ALTERNATE #2:** PROVIDE SEEDED TURF WITH 12" CONCRETE MOWBAND PER CITY OF ROSEVILLE PARKS CONSTRUCTION STANDARDS. SEE PLANTING PLANS.	--
A-03	**ADD ALTERNATE #3:** PROVIDE SODDED TURF WITH 12" CONCRETE MOWBAND PER CITY OF ROSEVILLE PARKS CONSTRUCTION STANDARDS. SEE PLANTING PLANS.	--
A-04	**ADD ALTERNATE #4:** PROVIDE BARK MULCH BUFFER PER CITY OF ROSEVILLE PARKS CONSTRUCTION STANDARDS. SEE PLANTING PLANS.	--
A-05	**ADD ALTERNATE #5:** PROVIDE CONCRETE NATURE TRAIL PER CITY OF ROSEVILLE PARKS CONSTRUCTION STANDARDS.	A/LC-2.0
A-06	**ADD ALTERNATE #6:** PROVIDE CUSTOM FABRIC SHADE STRUCTURE. TYPICAL OF 1. MANUFACTURER: USA SHADE OR APPROVED EQUAL MODEL: CUSTOM COLOR: AS SELECTED BY CITY CONTACT: GLEN WURSTER W/ALL ABOUT PLAY @ 916.923.2180	A/LC-2.1

FUHRMAN LEAMY
LAND GROUP
DESIGN • SERVICE • SOLUTIONS

3400 DOUGLAS BLVD, SUITE 275
ROSEVILLE, CALIFORNIA 95661
916.783.5263 • FLLANDGROUP.COM

JOB NO. : CRV: 25027

CITY OF ROSEVILLE APPROVAL

PROJECT:

JM-52 PARK

5097 MISTY RIDGE DRIVE
ROSEVILLE, CA

CLIENT:
CITY OF ROSEVILLE

REVISIONS	DATE
△	
△	
△	
△	

ISSUE		DATE
1	1ST SUBMITTAL	9.05.2025
2	2ND SUBMITTAL	10.08.2025
3	3RD SUBMITTAL	11.21.2025
4	4TH SUBMITTAL	1.28.2026
5		

REGISTERED LANDSCAPE ARCHITECT
KEVIN C. LEAMY
No. 4965
12/31/26
Renewal Date
1.15.2026
Date
STATE OF CALIFORNIA

DRAWN : AM
CHECKED : KCL
SCALE: : 1"=20'-0"

SHEET TITLE:

LANDSCAPE CONSTRUCTION PLAN & KEYNOTES

SHEET

LC-1.0

7 OF 30 SHEETS

FUHRMAN LEAMY LAND GROUP COPYRIGHT AND OTHER PROPERTY RIGHTS IN THESE PLANS. THESE PLANS AND DRAWINGS ARE NOT TO BE REPRODUCED, CHANGED OR COPIED IN ANY FORM OR MANNER WHATSOEVER WITHOUT FIRST OBTAINING THE EXPRESS WRITTEN PERMISSION OF FUHRMAN LEAMY LAND GROUP NOR ARE THEY TO BE ASSIGNED TO ANY THIRD PARTY WITHOUT FIRST OBTAINING WRITTEN PERMISSION AND CONSENT

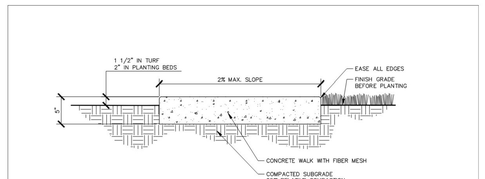

NOTES
1. PROVIDE CONROL JOINTS 2" DEEP AT INTERVALS THE WIDTH OF THE WALK.
2. MEDIUM BROOM FINISH PERPENDICULAR TO PATH OF TRAVEL UNLESS OTHERWISE SPECIFIED.

JAY GELLER, CPRE
PARKS, RECREATION & LIBRARIES DIRECTOR

CITY OF ROSEVILLE CALIFORNIA — PARKS, RECREATION, & LIBRARIES DEPARTMENT

CONCRETE PAVING

SCALE: NONE
REVISED: JULY 2025
REVIEWED BY: T. GEE
APPROVED BY: J. GELLER

PK-PA-2

A CONCRETE PAVING
NOT TO SCALE — PR-25027-38

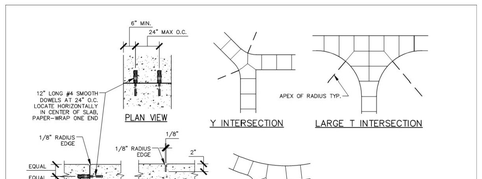

NOTES
1. CONTROL JOINTS SHALL NOT DIVIDE CONCRETE INTO SHAPES CONTAINING AN INTERIOR ANGLE OF 45 DEGREES OR LESS.
2. JOINTS SHALL BE SPACED EQUAL TO THE WIDTH OF THE PATH. EXAMPLE: A 10 FT. WIDE PATH SHALL HAVE JOINTS SPACED AT 10 FT. O.C.
3. EXPANSION JOINTS SHALL BE PLACED WHERE VERTICAL ELEMENTS MEET HORIZONTAL PAVING UNLESS OTHERWISE NOTED ON THE PLANS. THESE ELEMENTS INCLUDE BUT ARE NOT LIMITED TO THE FOLLOWING:
   - PLAY AREA CURB WALLS
   - BUILDINGS
   - SHADE STRUCTURES
   - WALLS
   - VERTICAL PLANTERS

JAY GELLER, CPRE
PARKS, RECREATION & LIBRARIES DIRECTOR

CITY OF ROSEVILLE CALIFORNIA — PARKS, RECREATION, & LIBRARIES DEPARTMENT

CONCRETE JOINTS

SCALE: NONE
REVISED: JULY 2025
REVIEWED BY: T. GEE
APPROVED BY: J. GELLER

PK-PA-3

B CONCRETE JOINTS
NOT TO SCALE — PR-25027-40

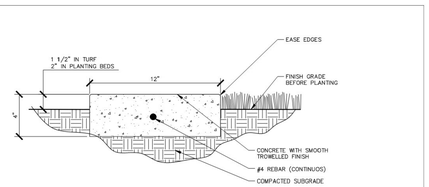

NOTES
1. WHERE VEHICULAR SERVICE/MAINTENANCE TRAFFIC WILL CROSS MOWBANDS, CONCRETE SECTIONS SHALL BE THICKENED TO 6" (SELECT AREAS ONLY).
2. PROVIDE 1/2" SCORE JOINTS AT 20' O.C.

JAY GELLER, CPRE
PARKS, RECREATION & LIBRARIES DIRECTOR

CITY OF ROSEVILLE CALIFORNIA — PARKS, RECREATION, & LIBRARIES DEPARTMENT

CONCRETE MOWBAND

SCALE: NONE
REVISED: JULY 2025
REVIEWED BY: T. GEE
APPROVED BY: J. GELLER

PK-MI-5

C CONCRETE MOWBAND
NOT TO SCALE — PR-25027-27

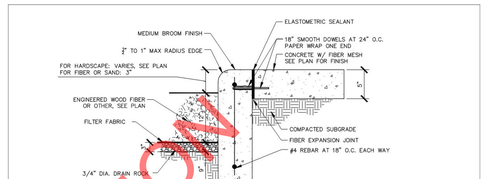

NOTES
1. INSTALL TYPE 3 CONCRETE CURB AND CONCRETE PAVING. PROVIDE 18" SMOOTH DOWELS AT 24" O.C.
2. PROVIDE VERTICAL SCORE JOINTS (1" DEEP) AT HORIZONTAL SCORE LINES. ALIGN WITH SIDEWALK.

JAY GELLER, CPRE
PARKS, RECREATION & LIBRARIES DIRECTOR

CITY OF ROSEVILLE CALIFORNIA — PARKS, RECREATION, & LIBRARIES DEPARTMENT

PLAY AREA
CONCRETE CURB

SCALE: NONE
REVISED: JULY 2025
REVIEWED BY: T. GEE
APPROVED BY: J. GELLER

PK-PL-2

D PLAY AREA CONCRETE CURB
NOT TO SCALE — PR-25027-45

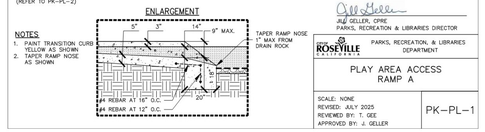

NOTES
1. PAINT TRANSITION CURB YELLOW AS SHOWN
2. TAPER RAMP NOSE AS SHOWN

JAY GELLER, CPRE
PARKS, RECREATION & LIBRARIES DIRECTOR

CITY OF ROSEVILLE CALIFORNIA — PARKS, RECREATION, & LIBRARIES DEPARTMENT

PLAY AREA ACCESS
RAMP A

SCALE: NONE
REVISED: JULY 2025
REVIEWED BY: T. GEE
APPROVED BY: J. GELLER

PK-PL-1

E PLAY AREA ACCESS RAMP 'A'
NOT TO SCALE — PR-25027-44



NOTES
1. CONTRACTOR TO SUBMIT SAMPLE OF LIGHT TAN OR CALIFORNIA GOLD DECOMPOSED GRANITE FOR APPROVAL BY CITY.

JAY GELLER, CPRE
PARKS, RECREATION & LIBRARIES DIRECTOR

CITY OF ROSEVILLE CALIFORNIA — PARKS, RECREATION, & LIBRARIES DEPARTMENT

DECOMPOSED GRANITE PAVING

SCALE: NONE
REVISED: JULY 2025
REVIEWED BY: T. GEE
APPROVED BY: J. GELLER

PK-PA-4

F DECOMPOSED GRANITE PAVING
NOT TO SCALE — PR-25027-43



PICNIC TABLES: SURFACE MOUNT
BENCHES: IN-GROUND MOUNT

NOTES
1. FURNISHING TO BE INSTALLED IN SURFACE MOUNT UNLESS OTHERWISE SPECIFIED
2. FOR IN GROUND MOUNT – INSTALL FOOTINGS PER MANUFACTURERS RECOMMENDATIONS.
3. FOR IN GROUND MOUNT – INSTALL PLUMB AND LEVEL.
4. INSTALLATION HEIGHTS:
   TABLE (TOP)– 28" MIN. – 34" MAX. PREFER 31" AT MID–POINT.
   –MAINTAIN 27" MIN. CLEAR SPACE TO BOTTOM OF TABLE
   BENCH (TOP)– 17" MIN. – 19" MAX. PREFER 18" AT MID–POINT.
5. REFER TO SPECIFICATIONS FOR SPECIFIED PRODUCTS.

JAY GELLER, CPRE
PARKS, RECREATION & LIBRARIES DIRECTOR

CITY OF ROSEVILLE CALIFORNIA — PARKS, RECREATION, & LIBRARIES DEPARTMENT

PICNIC TABLE AND BENCH
INSTALLATION HEIGHTS

SCALE: NONE
REVISED: JULY 2025
REVIEWED BY: T. GEE
APPROVED BY: J. GELLER

PK-MI-2

G PICNIC TABLE & BENCH INSTALLATION HEIGHTS
NOT TO SCALE — PR-25027-24

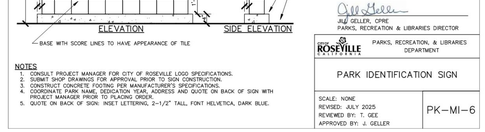

NOTES
1. CONSULT PROJECT MANAGER FOR CITY OF ROSEVILLE LOGO SPECIFICATIONS.
2. SUBMIT SHOP DRAWINGS FOR APPROVAL PRIOR TO SIGN CONSTRUCTION.
3. CONSTRUCT CONCRETE FOOTING PER MANUFACTURER'S SPECIFICATIONS.
4. COORDINATE PARK NAME, DEDICATION YEAR, ADDRESS AND QUOTE ON BACK OF SIGN WITH PROJECT MANAGER PRIOR TO PLACING ORDER.
5. QUOTE ON BACK OF SIGN: INSET LETTERING, 2–1/2" TALL, FONT HELVETICA, DARK BLUE.

JAY GELLER, CPRE
PARKS, RECREATION & LIBRARIES DIRECTOR

CITY OF ROSEVILLE CALIFORNIA — PARKS, RECREATION, & LIBRARIES DEPARTMENT

PARK IDENTIFICATION SIGN

SCALE: NONE
REVISED: JULY 2025
REVIEWED BY: T. GEE
APPROVED BY: J. GELLER

PK-MI-6

H PARK IDENTIFICATION SIGN
NOT TO SCALE — PR-25027-22

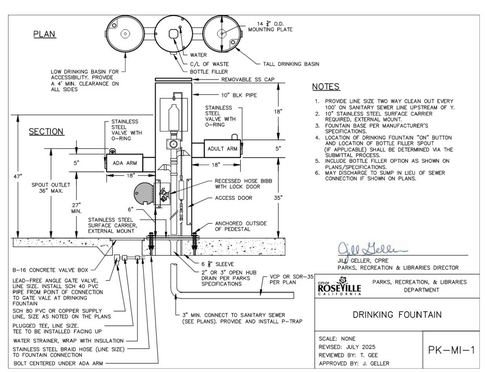

NOTES
1. PROVIDE LINE SIZE TWO WAY CLEAN OUT EVERY 100' ON SANITARY SEWER LINE UPSTREAM OF Y.
2. ALL PIPE PENETRATIONS, SURFACE CARRIER REQUIRED, EXTERNAL MOUNT.
3. FOUNTAIN BASE PER MANUFACTURER'S SPECIFICATIONS.
4. LOCATION OF DRINKING FOUNTAIN "ON" BUTTON AND LOCATION OF BOTTLE FILLER SPOUT (IF APPLICABLE) SHALL BE DETERMINED VIA THE SHOP DRAWING PROCESS.
5. INCLUDE BOTTLE FILLER OPTION AS SHOWN ON PLANS/SPECIFICATIONS.
6. MAY DISCHARGE TO SUMP IN LIEU OF SEWER CONNECTION IF SHOWN ON PLANS.

JAY GELLER, CPRE
PARKS, RECREATION & LIBRARIES DIRECTOR

CITY OF ROSEVILLE CALIFORNIA — PARKS, RECREATION, & LIBRARIES DEPARTMENT

DRINKING FOUNTAIN

SCALE: NONE
REVISED: JULY 2025
REVIEWED BY: T. GEE
APPROVED BY: J. GELLER

PK-MI-1

I DRINKING FOUNTAIN
NOT TO SCALE — PR-25027-21

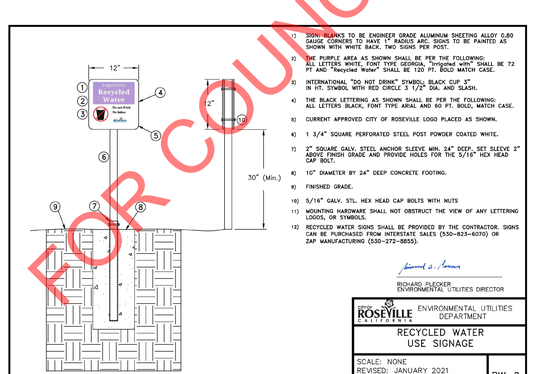

1) SIGN: BLANKS TO BE ENGINEER GRADE ALUMINUM SHEETING ALLOY 0.80 GAUGE CORNERS TO HAVE 1" RADIUS ARC. SIGNS TO BE PAINTED AS SHOWN WITH WHITE BACK. TWO SIGNS PER POST.
2) THE PURPLE AREA AS SHOWN SHALL BE PER THE FOLLOWING: ALL LETTERS WHITE, FONT TYPE GEORGIA, "Irrigated with" SHALL BE 72 PT AND "Recycled Water" SHALL BE 120 PT. BOLD MATCH CASE.
3) INTERNATIONAL "DO NOT DRINK" SYMBOL: BLACK CUP 3" IN HT. SYMBOL WITH RED CIRCLE 3 1/2" DIA. AND SLASH.
4) THE BLACK LETTERING AS SHOWN SHALL BE PER THE FOLLOWING: ALL LETTERS BLACK, FONT TYPE ARIAL AND 60 PT. BOLD, MATCH CASE.
5) CURRENT APPROVED CITY OF ROSEVILLE LOGO PLACED AS SHOWN.
6) 1 3/4" SQUARE PERFORATED STEEL POST POWDER COATED WHITE.
7) 2" SQUARE GALV. STEEL ANCHOR SLEEVE MIN. 24" DEEP, SET SLEEVE 2" ABOVE FINISH GRADE AND PROVIDE HOLES FOR THE 5/16" HEX HEAD CAP BOLT.
8) 10" DIAMETER BY 24" DEEP CONCRETE FOOTING.
9) FINISHED GRADE.
10) 5/16" GALV. STL HEX HEAD CAP BOLTS WITH NUTS
11) MOUNTING HARDWARE SHALL NOT OBSTRUCT THE VIEW OF ANY LETTERING LOGOS, OR SYMBOLS.
12) RECYCLED WATER SIGNS SHALL BE PROVIDED BY THE CONTRACTOR. SIGNS CAN BE PURCHASED FROM INTERSTATE SALES (530–823–6070) OR ZAP MANUFACTURING (530–272–8855).

RICHARD SLECKER
ENVIRONMENTAL UTILITIES DIRECTOR

CITY OF ROSEVILLE CALIFORNIA — ENVIRONMENTAL UTILITIES DEPARTMENT

RECYCLED WATER
USE SIGNAGE

SCALE: NONE
REVISED: JANUARY 2021
DRAWN BY: R. VAN NESS
APPROVED BY: RICHARD PLECKER

RW–9

J RECYCLED WATER SIGN
NOT TO SCALE — PR-25027-12

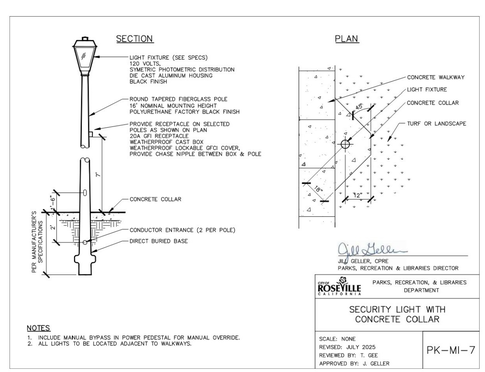

NOTES
1. INCLUDE MANUAL BYPASS IN POWER PEDESTAL FOR MANUAL OVERRIDE.
2. ALL LIGHTS TO BE LOCATED ADJACENT TO WALKWAYS.

JAY GELLER, CPRE
PARKS, RECREATION & LIBRARIES DIRECTOR

CITY OF ROSEVILLE CALIFORNIA — PARKS, RECREATION, & LIBRARIES DEPARTMENT

SECURITY LIGHT WITH
CONCRETE COLLAR

SCALE: NONE
REVISED: JULY 2025
REVIEWED BY: T. GEE
APPROVED BY: J. GELLER

PK-MI-7

K SECURITY LIGHT WITH CONCRETE COLLAR
NOT TO SCALE — PR-25027-26

FOR COUNCIL ONLY — NOT FOR CONSTRUCTION

FUHRMAN LEAMY
LAND GROUP
DESIGN • SERVICE • SOLUTIONS

3400 DOUGLAS BLVD, SUITE 275
ROSEVILLE, CALIFORNIA 95661
916.783.5263 • FLLANDGROUP.COM

JOB NO. : CRV- 25027

CITY OF ROSEVILLE APPROVAL

PROJECT:

JM-52 PARK

5097 MISTY RIDGE DRIVE
ROSEVILLE, CA

CLIENT:
CITY OF ROSEVILLE

REVISIONS	DATE
△	
△	
△	
△	

ISSUE		DATE
1	1ST SUBMITTAL	9.05.2025
2	2ND SUBMITTAL	10.08.2025
3	3RD SUBMITTAL	11.21.2025
4	4TH SUBMITTAL	1.28.2026
5		

REGISTERED LANDSCAPE ARCHITECT
KEVIN C. LEAMY
No. 4965
12/31/26 Renewal Date
1.15.2026 Date
STATE OF CALIFORNIA

DRAWN : AM
CHECKED : KCL
SCALE: : 1"=20'-0"

SHEET TITLE:

LANDSCAPE CONSTRUCTION DETAILS

SHEET

LC-2.0

8 OF 30 SHEETS

GENERAL NOTES

DESIGN LOADS

BUILDING CODE	CBC 2022 (BASED ON IBC 2021)
LIVE LOADS	5 PSF
SNOW LOAD	5 PSF
WIND LOADS	115 MPH[1]
	3-Sec. Gust, RISK CATEGORY II & EXPOSURE C

1.- 115 MPH ACCORDING TO THE BASIC WIND SPEED MAPS OF ASCE 7-16 IS EQUIVALENT TO THE ALLOWABLE STRESS DESIGN WIND SPEED OF 90 MPH ACCORDING TO ASCE 7-16 AND IBC 2021 EQ 16-17.

STRUCTURAL STEEL

1.- ALL STRUCTURAL SHAPES SHALL BE COLD FORMED HSS ASTM A500 GRADE C, UNLESS OTHERWISE NOTED, TYPICAL MECHANICAL PROPERTIES FOR HSS PRODUCTS:

SQUARE AND RECTANGULAR	50,000 PSI YIELD / 62,000 PSI TENSILE
ROUND PIPE	50,000 PSI YIELD / 62,000 PSI TENSILE

2.- ALL GALVANIZED STEEL TUBE PRODUCTS ARE MANUFACTURED PER ASTM A500, TYPICAL MECHANICAL PROPERTIES ACHIEVED FOR GALVANIZED TUBE PRODUCTS:

ROUND TUBE	50,000 PSI YIELD / 56,000 PSI TENSILE

3.- ALL PLATES SHALL COMPLY WITH ASTM A572 GRADE 50.

4.- ALL STEEL TUBING SHALL BE TRIPLE COATED FOR RUST PROTECTION USING THE IN-LINE ELECTROPLATING COAT PROCESS. TUBING SHALL BE INTERNALLY COATED WITH ZINC AND ORGANIC COATINGS TO PREVENT CORROSION AS MANUFACTURED BY ALLIED TUBE & CONDUIT.

5.- STRUCTURAL STEEL SHALL BE DETAILED, FABRICATED AND ERECTED IN ACCORDANCE WITH A.I.S.C. SPECIFICATIONS.

6.- ALL SHOP WELDS SHALL BE EXECUTED IN ACCORDANCE WITH THE LATEST EDITION OF THE AMERICAN WELDING SOCIETY (AWS) D1.1 SPECIFICATIONS. ALL WELDS SHALL BE CONTINUOUS WHERE LENGTH IS NOT GIVEN, UNLESS OTHERWISE SHOWN OR NOTED ON DRAWINGS. ALL WELDS SHALL DEVELOP THE FULL STRENGTH OF THE WEAKER MEMBER. ALL WELDS SHALL BE MADE USING E70XX .045 WIRE.

7.- SHOP CONNECTIONS SHALL BE WELDED UNLESS NOTED OTHERWISE. FIELD CONNECTIONS SHALL BE AS INDICATED ON THE DRAWINGS (IF REQUIRED). ALL FILLET WELDS SHALL BE A MINIMUM OF 3/16" UNLESS OTHERWISE NOTED. FIELD WELDS SHALL NOT BE ALLOWED.

8.- ALL HIGH STRENGTH BOLTS SHALL COMPLY WITH ASTM A325 TYPE 1 OR A490 TYPE 1. ALL NUTS SHALL COMPLY WITH ASTM A563DH, AND WASHERS SHALL COMPLY WITH ASTM F436.

9.- ALL HIGH STRENGTH BOLTS SHALL BE TIGHTENED TO A SNUG TIGHT CONDITION.

10.- ALL STAINLESS STEEL BOLTS / STUDS SHALL COMPLY WITH ASTM F-593, ALLOY GROUP 1 OR 2 ALL NUTS SHALL COMPLY WITH ASTM F-594 ALLOY GROUP 1 OR 2.

11.- ALL STRUCTURAL STEEL SHALL BE PAINTED WITH ONE SHOP COAT (2.5 TO 3.5 MILS THICK MIN). THIS COAT IS A WEATHER RESISTANT POWDER COATING BASED ON POLYESTER TGIC (MANUFACTURED BY SHERWIN WILLIAMS OR TIGER DRYLAC). TO ACHIEVE OPTIMUM ADHESION, IT IS RECOMMENDED THAT THE PROPER TREATMENT AND DRYING TAKE PLACE BEFORE COATING. POLYESTER POWDER (TGIC) SPECIFICATIONS SHALL BE AS FOLLOWS:
- PENCIL HARDNESS (ASTM D-3363)
- HUMIDITY (ASTM D-2247)
- SOLVENT RESISTANCE (PCI METHOD) - 50 DBL RUBS SL. SOFTNESS

FABRIC SPECIFICATION

1.- FABRIC SHALL BE SYNTHESIS COMMERCIAL 95 340 FR, A HIGH DENSITY POLYETHYLENE WITH ULTRA VIOLET ADDITIVES, WITH MONOFILAMENT AND TAPE CONSTRUCTION GIVING A STABLE MATERIAL AND LOCK-STITCH KNITTED.

2.- FABRIC SPECIFICATIONS:

	SOLID COLORS
- TENSILE STRENGTH	WARP 158 LBS
	WEFT 412 LBS
- WING TEAR	WARP 41 LBS
	WEFT 78 LBS
- BURST FORCE	435 LBS
- FADING	MINIMUM FADING AFTER 5 YEARS
- LIFE EXPECTANCY	A MINIMUM OF 10 YEARS CONTINUOUS EXPOSURE TO THE SUN

3.- FIRE TEST ON FABRIC: ASTM E 84, FLAME SPREAD INDEX 8, SMOKE DEVELOPED INDEX 6.

4.- THREAD-PTFE (TEFLON) USED MEET THE FOLLOWING SPECIFICATIONS: HIGH STRENGTH, LOW SHRINKAGE, WIDE TEMPERATURE RANGE, FLEX & ABRASION RESISTANT AND UV RADIATION IMMUNITY. LOCKSTITCH - 1200 DENIER. CHAINSTITCH THREAD - 2400 DENIER.

AIRCRAFT CABLE

1.- WIRE ROPE CABLE SHALL BE 7x19 STRAND CORE GALVANIZED WIRE ROPE WITH A BREAKING STRENGTH VALUE OF 7,000 LBS (1/4" DIAMETER).

2.- CABLES SHALL BE FED THROUGH THE FABRIC SLEEVES AROUND THE PERIMETER OF THE CANOPY AND TENSIONED UNTIL THE FABRIC PANELS (DESIGNED PURPOSELY UNDERSIZED) REACH A TAUT APPEARANCE. ANY LONG TERM CABLE SAG SHALL BE MINIMIZED DURING THE MAINTENANCE RE-TIGHTENING VISITS AS REQUIRED.

NOTICE

FABRIC SHALL BE REMOVED IF EITHER CONDITIONS ARE ANTICIPATED:

1. **SNOW LOAD EXCEEDS 5 PSF.**
2. **WIND SPEED EXCEEDS 115 MPH ULTIMATE (90 MPH ALLOWABLE).**

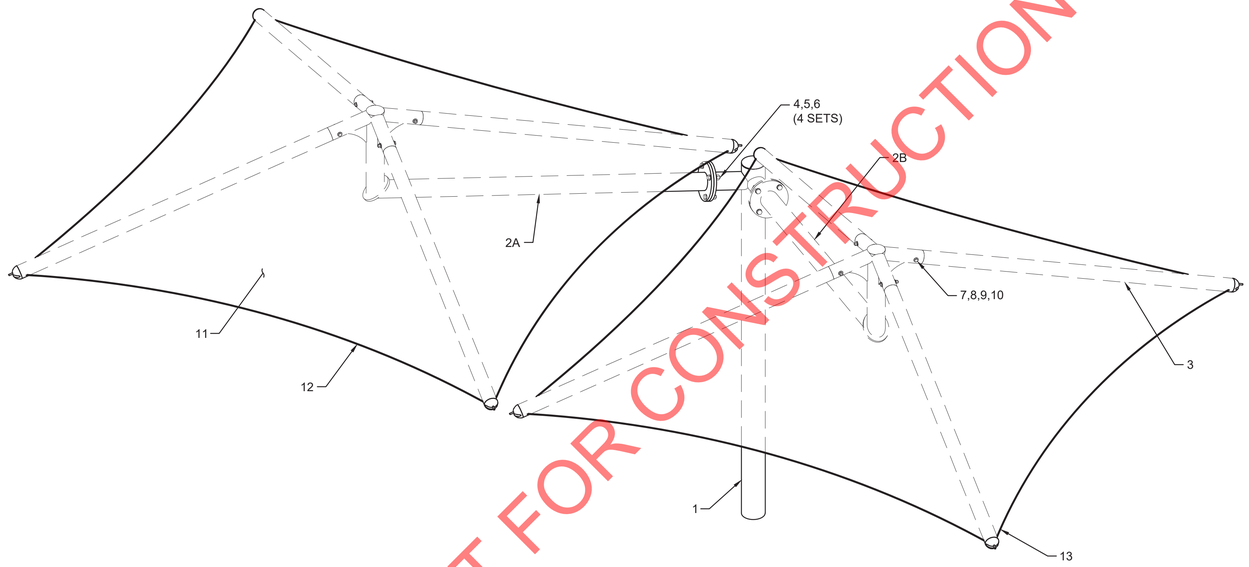

SPECIAL INSPECTION

1.- STRUCTURAL TESTS AND STRUCTURAL OBSERVATIONS SHALL COMPLY WITH THE APPLICABLE PROVISIONS OF CHAPTER 17 OF THE CBC 2022 BUILDING CODE.

2.- ALL CONTINUOUS INSPECTIONS SHALL BE DONE BY AN CERTIFIED DEPUTY INSPECTOR.

3.- CONTINUOUS SPECIAL INSPECTION BY A REGISTERED DEPUTY INSPECTOR IS REQUIRED FOR HIGH STRENGTH BOLTING. (1704 & CHAPTER 22)

4.- VISUAL NON DESTRUCTIVE TESTING PERFORMED TO AWS D1.1-2010 BY S.C.W.I. IS REQUIRED FOR ALL WELDS.

STATEMENT OF SPECIAL INSPECTION

ACTIVITY	CONTINUOUS	PERIODIC
HIGH STRENGTH BOLTING	X	
DRILLED PIERS		X

LIST OF MATERIALS

ITEM	QTY.	DESCRIPTION	MATERIAL / DWG	SMI PART NO.
STEEL AND BOLTS				
1	1	COLUMN	HSS Ø8.625 x 0.500	N/A
2A	1	CANTI ARM	HSS Ø6.625 x 0.375	N/A
2B	1	CANTI ARM	HSS Ø6.625 x 0.375	N/A
3	8	RAFTER	5.0 GA 7 RD. TUBING	SPR-500-130
4	8	Ø1"-8NC x 4" HEX BOLT	ASTM A325 GALVANIZED	307722
5	8	Ø1"-8NC HEX NUT	ASTM A563 GALVANIZED	307968
6	16	Ø1" FLAT WASHER	ASTM F436 GALVANIZED	307619
7	8	Ø5/8"-11NC x 6 1/2" HEX BOLT	ASTM A325 GALVANIZED	308894
8	8	Ø5/8"-11NC HEX NUT	ASTM A563 GALVANIZED	308181
9	8	Ø5/8" SPLIT LOCK WASHER	ASTM F436 GALVANIZED	308183
10	16	Ø5/8" FLAT WASHER	ASTM F436 GALVANIZED	308182
FABRIC AND HARDWARE				
11	2	FABRIC 16' x 16'	COMMERCIAL 95_340FR	AREA: 256 SQF, WEIGHT: 18 LBS
12	2	80 FT OF Ø1/4" STEEL CABLE	GALVANIZED CABLE	307604
13	8	Ø1/4" CABLE CLAMP	GALVANIZED	307633

ISOMETRIC VIEW

CODE ANALYSIS

BUILDING	OCCUPANCY	CONSTRUCTION TYPE	AREA (SQF)	OCCUPANT LOAD
SHADE STRUCTURE	U	V-B	528	N/A
16'-0" x 33'-0"				

FOR COUNCIL ONLY - NOT FOR CONSTRUCTION

REGISTERED PROFESSIONAL ENGINEER WILLIAM N. BOWEN II No. C32642 Exp 12-31-25 CIVIL STATE OF CALIFORNIA

Digitally signed by William N. Bowen II, P.E. Date: 2025.11.17 11:15:55 -06'00'

THESE PLANS AND SPECIFICATIONS ARE THE PROPERTY OF USA SHADE AND FABRIC STRUCTURES AND SHALL NOT BE REPRODUCED WITHOUT THEIR WRITTEN PERMISSION.

USASHADE & Fabric Structures®

CORPORATE HEADQUARTERS
2580 ESTERS BLVD., SUITE 100
DFW AIRPORT, TX 75261
800-966-5005

CERTIFICATIONS:
IAS CERTIFICATION No: FA-428
CLARK COUNTY MANUFACTURER CERTIFICATION NUMBER (NEVADA): 355

CUSTOMER:
CITY OF ROSEVILLE

PROJECT NAME:
CITY OF ROSEVILLE - JM-52 PARK

LOCATION:
ROSEVILLE CA

PROJECT NUMBER.
97334

STRUCTURE TYPE:
JOINED SPPYR CANTILEVER (FULL CUSTOM)

SIZE:
16' x 33' x 9'e

SCALE : AS NOTED

DRAWING SIZE: B

REV	DESCRIPTION	DATE	DRW	CHK	ENG
NC	FULL CUSTOM	11/11/25	MAC	QD-SM	MZG

Eng. By : MZG	11/11/25
Design By : MAC	11/11/25
Approved By : QD-SM-MS	11/11/25

DRAWING DESCRIPTION:
NOTES / LOM

DWG. 97334-1.0

PAGE 1000

SS-1

PLAN NORTH

FOR TRUE NORTH SEE CUSTOMER'S SITE PLAN

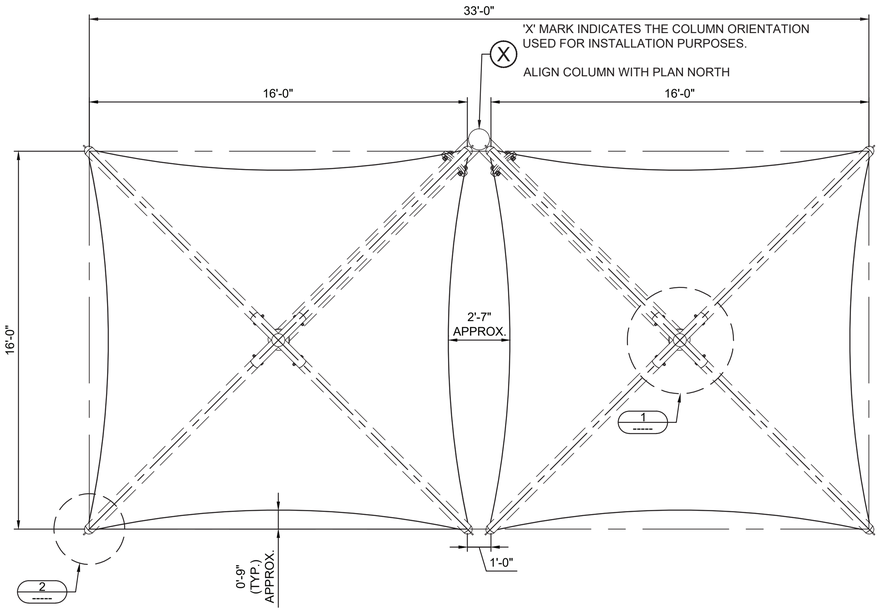

TOP VIEW

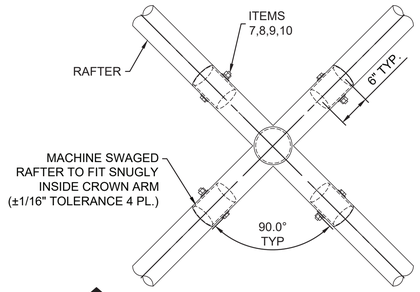

DETAIL 1

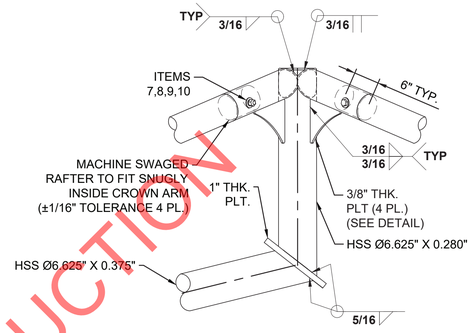

VIEW B-B

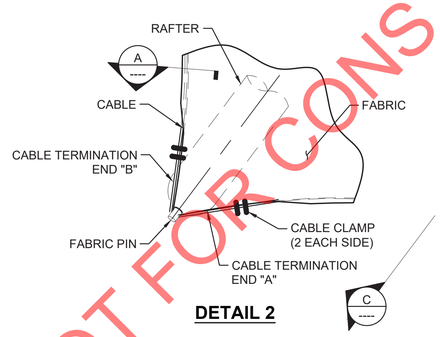

DETAIL 2

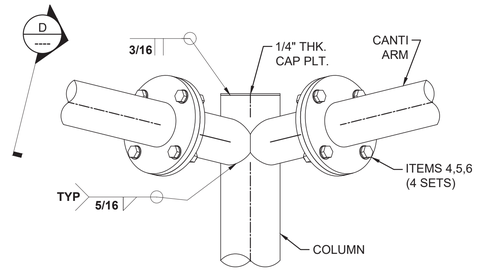

DETAIL 3

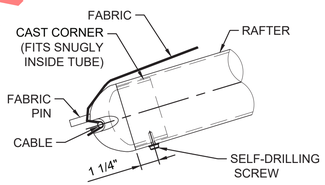

VIEW C-C

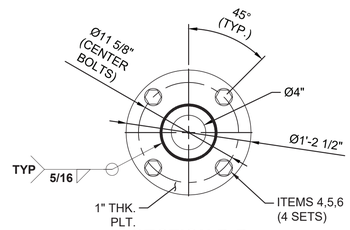

SECTION D-D

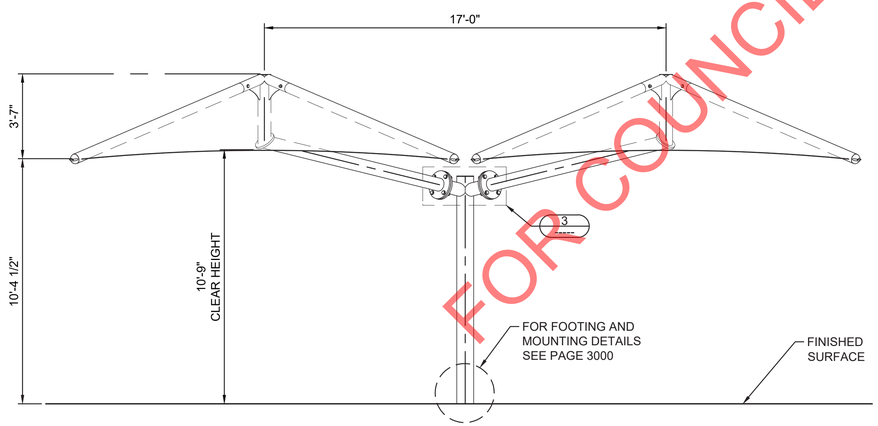

FRONT ELEVATION

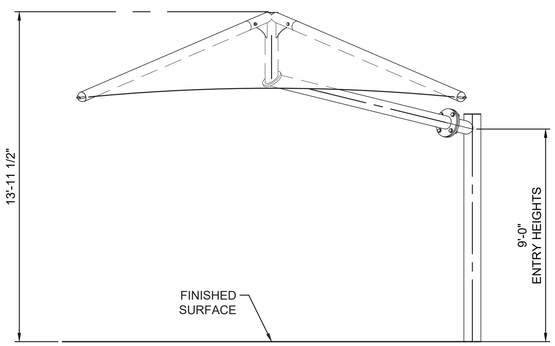

SIDE ELEVATION

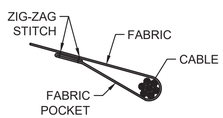

SECTION A-A

FOR COUNCIL ONLY - NOT FOR CONSTRUCTION

THESE PLANS AND SPECIFICATIONS ARE THE PROPERTY OF USA SHADE AND FABRIC STRUCTURES AND SHALL NOT BE REPRODUCED WITHOUT THEIR WRITTEN PERMISSION.

USASHADE & Fabric Structures

CORPORATE HEADQUARTERS
2580 ESTERS BLVD., SUITE 100
DFW AIRPORT, TX 75261
800-966-5005

CERTIFICATIONS:
IAS CERTIFICATION No: FA-428
CLARK COUNTY MANUFACTURER CERTIFICATION NUMBER (NEVADA): 355

CUSTOMER:
CITY OF ROSEVILLE

PROJECT NAME:
CITY OF ROSEVILLE - JM-52 PARK

LOCATION:
ROSEVILLE
CA

PROJECT NUMBER.
97334

STRUCTURE TYPE:
JOINED SPPYR CANTILEVER (FULL CUSTOM)

SIZE:
16' x 33' x 9'e

SCALE : AS NOTED

DRAWING SIZE: B

NC	REV	DESCRIPTION	DATE	DRW	CHK	ENG
	FULL CUSTOM		11/11/25	MAC	QD-SM	MZG

REGISTERED PROFESSIONAL ENGINEER
WILLIAM N. BOWEN II
No. C32642
Exp 12-31-25
CIVIL
STATE OF CALIFORNIA

Digitally signed by William N. Bowen II, P.E.
Date: 2025.11.17 11:16:15 -06'00'

Eng. By : MZG	11/11/25
Design By : MAC	11/11/25
Approved By : QD-SM-MS	11/11/25

DRAWING DESCRIPTION:
VIEWS AND DETAILS

DWG.
97334-1.0

PAGE
2000

SS-2

REINFORCED CONCRETE NOTES

1.- CONCRETE WORK SHALL BE EXECUTED IN ACCORDANCE WITH THE LATEST EDITION OF THE AMERICAN CONCRETE INSTITUTE SPECIFICATION FOR STRUCTURAL CONCRETE ACI 301 AND BUILDING CODE ACI 318.
CONCRETE SPECIFICATIONS, SHALL BE AS FOLLOWS:
- 28 DAY STRENGTH: 2500 PSI
- SLUMP: 3-5
- PORTLAND CEMENT SHALL CONFORM TO C-150
- AGGREGATE SHALL CONFORM TO ASTM C-33

2.- ALL REINFORCEMENT STEEL SHALL CONFORM TO ASTM A-615 GRADE 60; AND SHALL BE DETAILED, FABRICATED AND PLACED IN ACCORDANCE WITH THE LATEST ACI SPECIFICATION FOR STRUCTURAL CONCRETE ACI 301, ACI DETAILING MANUAL AND CRSI MANUAL OF STANDARD PRACTICE.

3.- ALL ANCHOR BOLTS SET IN NEW CONCRETE (WHEN APPLICABLE) SHALL COMPLY WITH ASTM F-1554 GRADE 55 (GALVANIZED).

4.- ALL NON-SHRINK GROUT SHALL HAVE A MINIMUM 28 DAYS COMPRESSIVE STRENGTH OF 5000 PSI, AND SHALL COMPLY THE REQUIREMENTS OF ASTM C109, ASTM C939, ASTM C1090, ASTM C1107, WHEN APPLICABLE.

5.- SOIL PARAMETERS FOR FOOTING ANALYSIS; TABLE 1806.2, CLASS : 5

FLAME RETARDANT

Fabric Registration

LICENSE NUMBER: F-037801

COMMERCIAL NINETYFIVE
340FR

Product Marketed by:

GALE PACIFIC LTD
145 WOODLANDS DRIVE
BRAESIDE, AUSTRAILIA 3195, ,

Issue Date : 04/09/2025
Expiration Date : 06/30/2026

This product meets the minimum requirements of flame resistance established by the California State Fire Marshal for products identified in Section 13115, California Health and Safety Code. The scope of the approved use of this product is provided in the current edition of the CALIFORNIA APPROVED LIST OF FLAME RETARDANT CHEMICALS AND FABRICS, GENERAL AND LIMITED APPLICATIONS CONCERNS published by the California State Fire Marshal.

Issued By Cortney Walker
Fire Engineering License Manager
Fire Engineering & Investigations Division

Reviewed and Approved By Patricia Setter
Program Coordinator
Fire Engineering & Investigations Division

OFFICE OF THE STATE FIRE MARSHAL

Please visit uatcalfire.govmotus.org for more information on Licensing and Permitting with CAL FIRE

Page 1 of 1

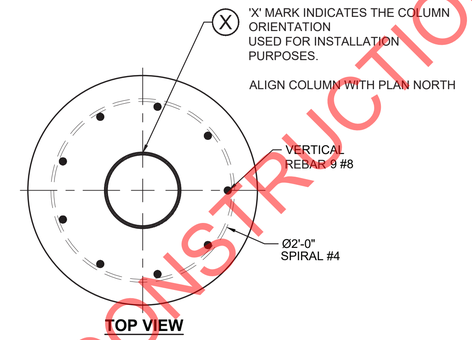

TOP VIEW

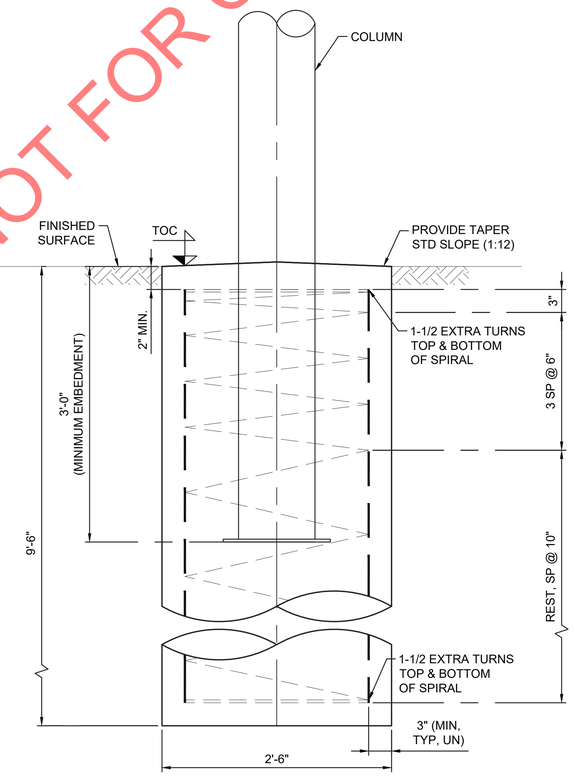

FOOTING TYPE Ø2'-6" X 9'-6" SD
(PIH-EMBEDDED)
USE FOR NON-CONSTRAINED CASES

FOR COUNCIL ONLY - NOT FOR CONSTRUCTION

PLAN NORTH

FOR TRUE NORTH SEE CUSTOMER'S SITE PLAN

THESE PLANS AND SPECIFICATIONS ARE THE PROPERTY OF USA SHADE AND FABRIC STRUCTURES AND SHALL NOT BE REPRODUCED WITHOUT THEIR WRITTEN PERMISSION.

USASHADE & Fabric Structures

CORPORATE HEADQUARTERS
2580 ESTERS BLVD., SUITE 100
DFW AIRPORT, TX 75261
800-966-5005

CERTIFICATIONS:
IAS CERTIFICATION No: FA-428
CLARK COUNTY MANUFACTURER CERTIFICATION NUMBER (NEVADA): 355

CUSTOMER:
CITY OF ROSEVILLE

PROJECT NAME:
CITY OF ROSEVILLE - JM-52 PARK

LOCATION:
ROSEVILLE
CA

PROJECT NUMBER.
97334

STRUCTURE TYPE:
JOINED SPPYR CANTILEVER (FULL CUSTOM)

SIZE:
16' x 33' x 9'e

SCALE : AS NOTED

DRAWING SIZE: B

NC	FULL CUSTOM	11/11/25	MAC	QD-SM	MZG
REV	DESCRIPTION	DATE	DRW	CHK	ENG

Eng. By : MZG	11/11/25
Design By : MAC	11/11/25
Approved By : QD-SM-MS	11/11/25

DRAWING DESCRIPTION:
FOOTING DETAILS

DWG. 97334-1.0

PAGE 3000

SS-3

REGISTERED PROFESSIONAL ENGINEER — WILLIAM N. BOWEN II — No. C32642 — Exp 12-31-25 — CIVIL — STATE OF CALIFORNIA

Digitally signed by William N. Bowen II, P.E.
Date: 2025.11.17 11:16:27 -06'00'

CITY GRADING NOTES

1. GRADING SHALL CONFORM TO APPENDIX CHAPTER 33 UBC, LATEST EDITION.
2. ALL EROSION AND SEDIMENT CONTROL MEASURES SHALL BE IMPLEMENTED AS SPECIFIED IN THE STORMWATER POLLUTION PREVENTION PLAN (SWPPP) FOR THIS PROJECT OR AS DETERMINED BY THE CITY INSPECTOR. THE SWPPP IS CONSIDERED A DYNAMIC DOCUMENT AND WILL CHANGE AS CONDITIONS WARRANT. PERMANENT EROSION AND SEDIMENT CONTROL MEASURES WILL BE CONSTRUCTED AS SHOWN ON THE SWPPP PLAN.
3. LOTS SHALL BE GRADED WITH A CONSTANT SLOPE ALONG THE FRONTAGE OF THE RIGHT-OF-WAY, FROM BUILDING SETBACK LINE TO BACK OF SIDEWALK. ALL TEMPORARY AND PERMANENT SLOPES STEEPER THAN 4:1 ALONG THIS FRONTAGE SHALL HAVE EROSION NETTING INSTALLED.
4. ALL REAR LOT CORNER ELEVATIONS SHALL BE EQUAL TO OR GREATER THAN THE HIGHEST ADJACENT PAD GRADE UNLESS SPECIFICALLY SHOWN ON THESE PLANS AND APPROVED BY ENGINEERING DIVISION.
5. NON-POTABLE WATER SHALL BE SPRAYED ON ALL EXPOSED EARTH SURFACES DURING CLEARING GRADING, EARTH MOVING, AND OTHER SITE PREPARATION ACTIVITIES. THE EXPOSED EARTH SHALL BE WATERED THROUGHOUT THE DAY TO MINIMIZE DUST.
6. TARPAULINS OR OTHER EFFECTIVE COVERS SHALL BE USED ON ALL STOCKPILED EARTH MATERIAL AND ON HAUL TRUCKS TO MINIMIZE DUST.
7. THE CITY SHALL HAVE THE AUTHORITY TO STOP ALL GRADING OPERATIONS, IF, IN OPINION OF CITY STAFF, INADEQUATE DUST CONTROL MEASURES ARE BEING PRACTICED OR EXCESSIVE WIND CONDITIONS CONTRIBUTE TO FUGITIVE DUST EMISSIONS.
8. ADJACENT STREET FRONTAGES SHALL BE SWEPT AT LEAST ONCE A DAY TO REMOVE SILT AND OTHER DIRT WHICH IS EVIDENT FROM CONSTRUCTION ACTIVITIES. REFER TO SCHEDULES WITHIN SWPPP.
9. THE CONTRACTOR SHALL BE RESPONSIBLE FOR CLEANING CONSTRUCTION VEHICLES LEAVING THE SITE ON A DAILY BASIS TO PREVENT DUST, SILT AND DIRT FROM BEING RELEASED OR TRACKED OFFSITE. REFER TO SWPPP FOR SPECIFIC REQUIRMENTS.
10. CONSTRUCTION SHALL STOP IF CULTURAL RESOURCES ARE SUSPECTED. IT IS POSSIBLE THAT PREVIOUS ACTIVITIES HAVE OBSCURED SURFACE EVIDENCE OF CULTURAL RESOURCES. IF SIGNS OF AN ARCHEOLOGICAL SITE, SUCH AS ANY UNUSUAL AMOUNTS OF STONE, BONE, OR SHELL, ARE UNCOVERED DURING GRADING OR OTHER CONSTRUCTION ACTIVITIES, WORK SHALL BE HALTED WITHIN 100 FEET OF THE FIND AND THE ROSEVILLE COMMUNITY DEVELOPMENT DEPARTMENT SHALL BE NOTIFIED. A QUALIFIED ARCHEOLOGIST SHALL BE CONSULTED FOR AN ON-SITE EVALUATION. THE ARCHEOLOGIST MAY REQUIRE ADDITIONAL MITIGATION.
11. SHOULD GRADING OPERATIONS UNCOVER HAZARDOUS MATERIALS, OR WHAT APPEARS TO BE HAZARDOUS MATERIALS, THE FIRE DEPARTMENT SHALL BE CONTACTED IMMEDIATELY AT (916) 774-5820. THE AREA, WHICH CONTAINS THE HAZARDOUS MATERIALS, SHALL BE MARKED OFF UNTIL AN INVESTIGATION BY A MEMBER OF THE FIRE DEPARTMENT IS CONDUCTED.
12. GRADES SHOWN OUTSIDE OF THE PUBLIC RIGHT OF WAY WITHIN THE APPROVED GRADING PLAN ARE SUBJECT TO FURTHER REVIEW AND MODIFICATION BY THE BUILDING DIVISION FOR COMPLIANCE WITH THE UNIFORM BUILDING CODE AND STATE OF CALIFORNIA TITLE 24 HANDICAP ACCESSIBILITY REQUIREMENTS.
13. THE CONTRACTOR/DEVELOPER IS EXPECTED TO COMPLY WITH THE FUGITIVE DUST CONTROL REQUIREMENTS FROM THE PLACER COUNTY AIR POLLUTION CONTROL DISTRICT: WWW.PLACER.CA.GOV/APCD
14. CONTAMINATED SOIL – DEVELOPER AGREES TO PROPERLY ADHERE TO ALL THEN CURRENT STATE AND FEDERAL REQUIREMENTS WHEN ANY EVIDENCE OF TOXIC, HAZARDOUS OR CONTAMINATED SOILS ARE ENCOUNTERED DURING ANY AND ALL EXCAVATION OR GRADING OPERATIONS, AND TO INDEMNIFY, DEFEND AND HOLD HARMLESS THE CITY OR ROSEVILLE, ITS OFFICERS, AGENTS AND EMPLOYEES, FROM ANY AND ALL LIABILITY, COSTS, CLAIMS, FEES, FINES, PENALTIES AND CLAIMS OF OR DAMAGE OF ANY TYPE WHATSOEVER. EXTRA COSTS FOR REMEDIATION AND/OR REMOVAL OF SOIL SHALL BE BOURN SOLELY BY THE DEVELOPER. THE PARTIES INTEND THAT THIS PROVISION BE BROADLY CONSTRUED.

EARTHWORK QUANTITIES

(FOLLOWING NUMBERS ARE FOR PERMITTING PURPOSES ONLY CONTRACTOR IS RESPONSIBLE FOR THEIR OWN EARTH WORK QUANTITIES)
CUT: ±380 CU.YD.
FILL: ±220 CU.YD.
NET: ±160 CU.YD. EXPORT
PRIOR TO SITE GRADING; CONTRACTOR SHALL PROVIDE CITY INSPECTOR THE LOCATION OF THE IMPORT (OR EXPORT) SITE AND THE ASSOCIATED GRADING PERMIT FOR THE CORRESPONDING SITE.

GRADING NOTES

1. CONTRACTOR SHALL PROTECT EXISTING UTILITIES AND APPURTENANCES. ADJUST VAULT LIDS TO GRADE AS NEEDED.
2. CONTRACTOR SHALL CONSTRUCT SIDEWALK (MAX. CROSS SLOPE 2%, LONGITUDINAL SLOPE 4.9% MAX.) VERIFY SLOPE PRIOR TO POURING CONCRETE.
3. CONTRACTOR SHALL CONSTRUCT PLAZA (MAX. CROSS SLOPE 2% IN ANY DIRECTION. VERIFY SLOPE PRIOR TO POURING CONCRETE.
4. CONTRACTOR SHALL VERIFY EXISTING ELEVATIONS, ADJUST PROPOSED SIDEWALK TO MAINTAIN ACCESSIBILITY. [2]
5. CONTRACTOR SHALL CONSTRUCT ACCESSIBLE PLAY AREA RAMP PER CITY STD DTL PK-PL-1.
6. CUT IN DIRT NATURE TRAIL AT EXISTING GRADE PER CITY OF ROSEVILLE DIRECTION.
7. INSTALL DECOMPOSED GRANITE "DG" PAD SEE LANDSCAPE PLANS.

DRAIN CONSTRUCTION NOTES

D1 EX STORM DRAIN STUB
CONTRACTOR SHALL POTHOLE EXISTING STORM DRAIN PIPE AND VERIFY INVERT. NOTIFY ENGINEER OF DISCREPANCIES.
EXISTING IE=±111.10 (12"ø)

D2 SEE GRADING DETAIL (C1.1)

SEWER CONSTRUCTION NOTES

S1 EX SEWER STUB
CONTRACTOR SHALL POTHOLE EXISTING SEWER PIPE AND VERIFY INVERT ELEVATION AND HORIZONTAL LOCATION. NOTIFY ENGINEER OF DISCREPANCIES.
(E) IE=±106.6 (6")
CONTRACTOR SHALL PLUG EXISTING STUB PER CITY STANDARDS.

S2 INSTALL DRINKING FOUNTAIN
PER CITY STD DTL PK-MI-1.
IE=112.42 (4"ø)

S3 INSTALL DRYWELL
NDS FLO-WELL OR APPROVED EQUAL (D C1.2)

WATER CONSTRUCTION NOTES

W1 EX DOMESTIC WATER STUB
CONTRACTOR SHALL REMOVE EXISTING BLOWOFF AND INSTALL 1" METER AND 1" BACKFLOW PER CITY STD DTL W-6.

W2 INSTALL DRINKING FOUNTAIN
PER CITY STD DTL PK-MI-1.

RECYCLED WATER CONSTRUCTION NOTES

RW1 EX RECYCLED WATER STUB
CONTRACTOR SHALL REMOVE EXISTING BLOWOFF AND INSTALL 1" RECYCLED WATER METER PER CITY STD DTL RW-8.

FIRST ORDER OF BUSINESS

CONTRACTOR SHALL POTHOLE ALL EXISTING UTILITIES TO VERIFY EXACT LOCATION PRIOR TO CONSTRUCTION OF ANY PROPOSED UTILITIES. COORDINATE WITH CITY INSPECTOR.

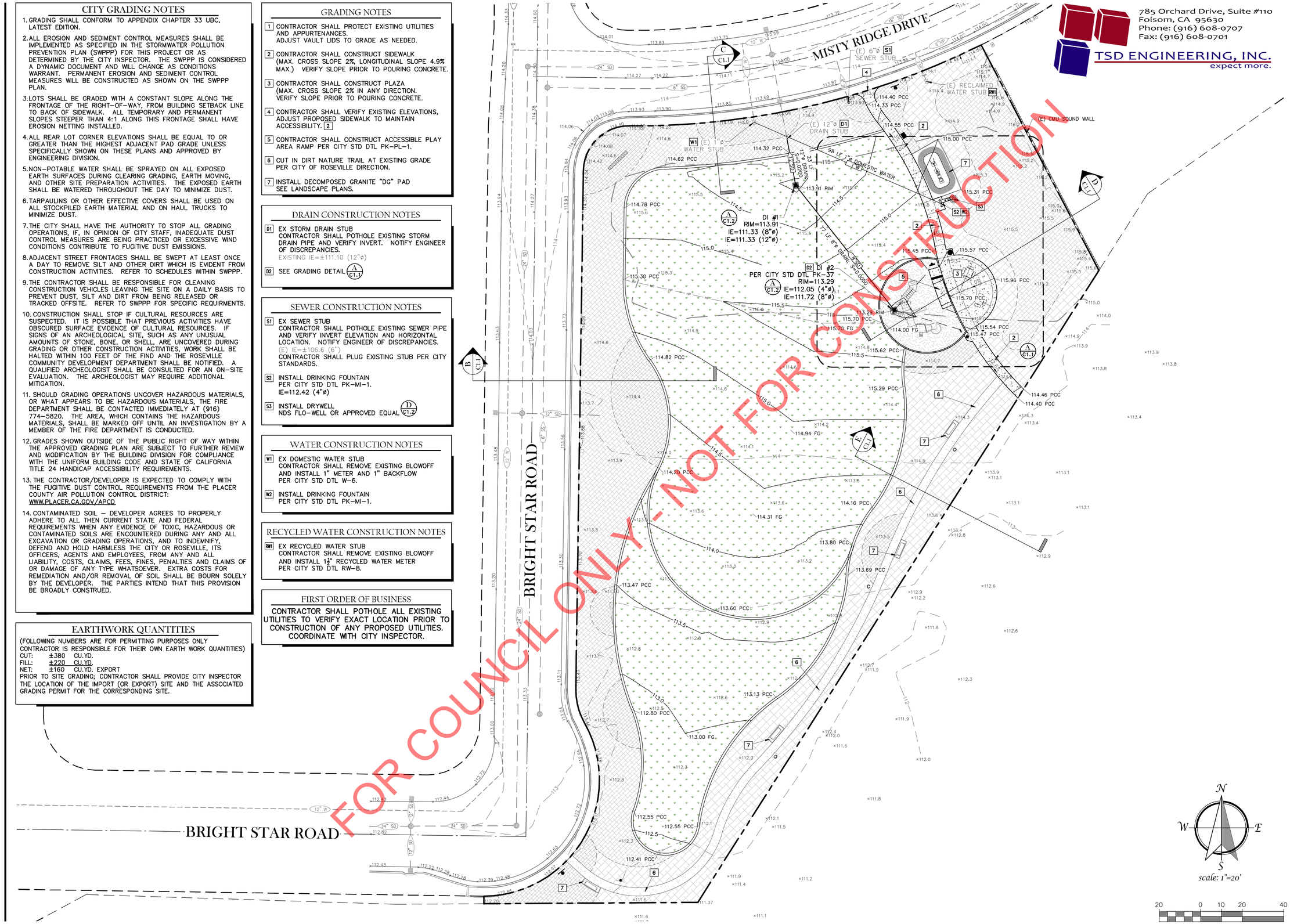

scale: 1"=20'

20 0 10 20 40

TSD ENGINEERING, INC.
expect more.
785 Orchard Drive, Suite #110
Folsom, CA 95630
Phone: (916) 608-0707
Fax: (916) 608-0701

FUHRMAN LEAMY LAND GROUP
DESIGN • SERVICE • SOLUTIONS
3400 DOUGLAS BLVD, SUITE 275
ROSEVILLE, CALIFORNIA 95661
916.783.5263 • FLLANDGROUP.COM

JOB NO. : CRV: 25027

CITY OF ROSEVILLE APPROVAL

PROJECT:

JM-52 PARK

5097 MISTY RIDGE DRIVE
ROSEVILLE, CA

CLIENT:
CITY OF ROSEVILLE

REVISIONS	DATE
△	
△	
△	
△	

ISSUE		DATE
1	1ST SUBMITTAL	09.05.2025
2	2ND SUBMITTAL	10.08.2025
3	3RD SUBMITTAL	11.21.2025
4	4TH SUBMITTAL	01.28.2026
5		

REGISTERED PROFESSIONAL ENGINEER
CASEY S. FEICHTER
No. 58930
Exp. 6-30-27
CIVIL
STATE OF CALIFORNIA

DRAWN : DJM
CHECKED : CSF
SCALE: : 1" = 20'-0"

SHEET TITLE:

GRADING & DRAINAGE PLAN

SHEET
C1.0
12 OF 30 SHEETS

PLANS AND DRAWINGS ARE NOT TO BE REPRODUCED, CHANGED OR COPIED IN ANY FORM OR MANNER WHATSOEVER WITHOUT FIRST OBTAINING THE EXPRESS WRITTEN PERMISSION OF FUHRMAN LEAMY LAND GROUP NOR ARE THEY TO BE ASSIGNED TO ANY THIRD PARTY WITHOUT FIRST OBTAINING WRITTEN PERMISSION AND CONSENT.
FUHRMAN LEAMY LAND GROUP HEREBY EXPRESSLY RESERVES ITS COMMON LAW COPYRIGHT AND OTHER PROPERTY RIGHTS IN THESE PLANS. THESE PLANS AND DRAWINGS

FURHMAN LEAMY LAND GROUP HEREBY EXPRESSLY RESERVES ITS COMMON LAW COPYRIGHT AND OTHER PROPERTY RIGHTS IN THESE PLANS. THESE PLANS AND DRAWINGS ARE NOT TO BE REPRODUCED, CHANGED OR COPIED IN ANY FORM OR MANNER WHATSOEVER WITHOUT FIRST OBTAINING THE EXPRESS WRITTEN PERMISSION OF FUHRMAN LEAMY LAND GROUP NOR ARE THEY TO BE ASSIGNED TO ANY THIRD PARTY WITHOUT FIRST OBTAINING WRITTEN PERMISSION AND CONSENT

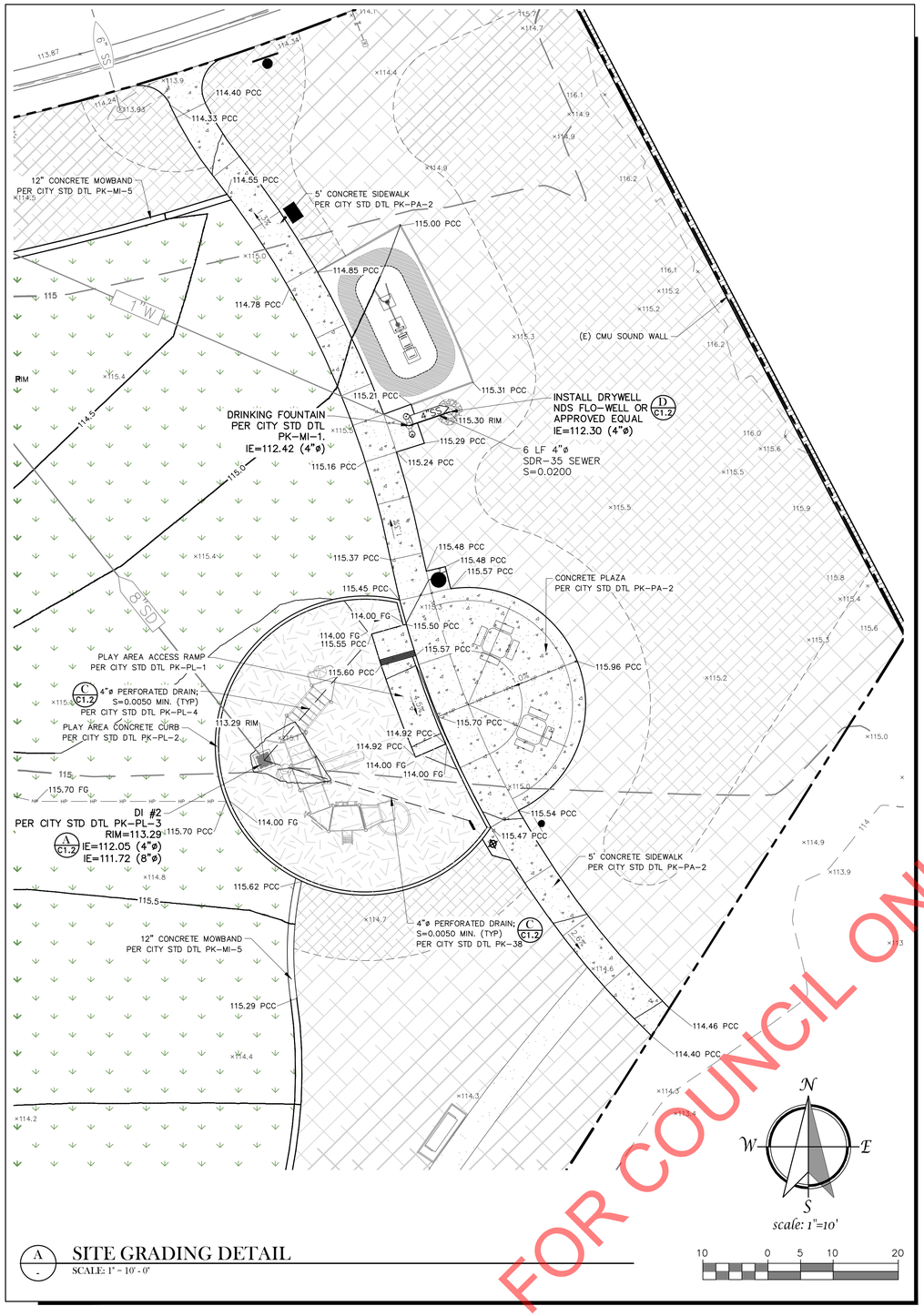

A
-
SITE GRADING DETAIL
SCALE: 1" = 10' - 0"

785 Orchard Drive, Suite #110
Folsom, CA 95630
Phone: (916) 608-0707
Fax: (916) 608-0701
TSD ENGINEERING, INC.
expect more.

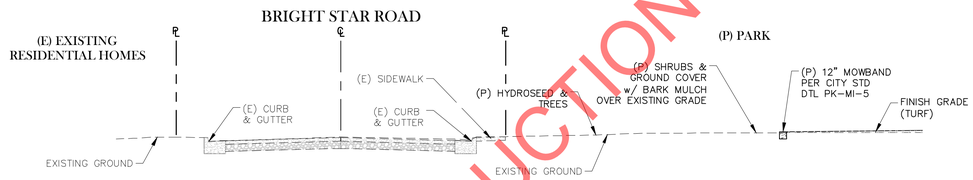

B
-
GRADING SECTION
SCALE: 1" = 10'-0"

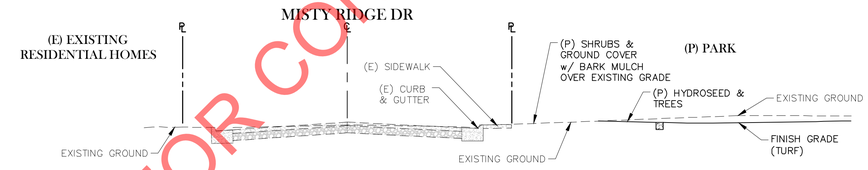

C
-
GRADING SECTION
SCALE: 1" = 10'-0"

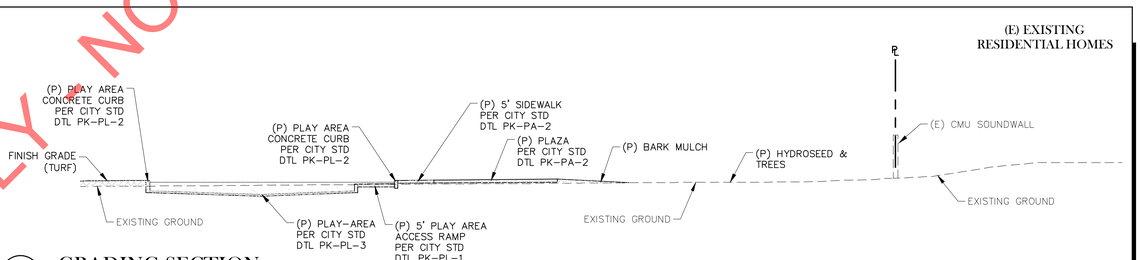

D
-
GRADING SECTION
SCALE: 1" = 10'-0"

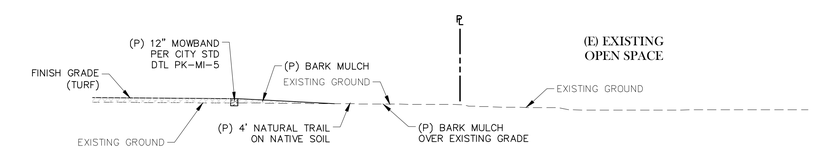

E
-
GRADING SECTION
SCALE: 1" = 10'-0"

FOR COUNCIL ONLY
NOT FOR CONSTRUCTION

FUHRMAN LEAMY
LAND GROUP
DESIGN • SERVICE • SOLUTIONS
3400 DOUGLAS BLVD, SUITE 275
ROSEVILLE, CALIFORNIA 95661
916.783.5263 • FLLANDGROUP.COM

JOB NO. : CRV: 25027

CITY OF ROSEVILLE APPROVAL

PROJECT:

JM-52 PARK

5097 MISTY RIDGE DRIVE
ROSEVILLE, CA

CLIENT:
CITY OF ROSEVILLE

REVISIONS	DATE
△	
△	
△	
△	

ISSUE		DATE
1	1ST SUBMITTAL	09.05.2025
2	2ND SUBMITTAL	10.08.2025
3	3RD SUBMITTAL	11.21.2025
4	4TH SUBMITTAL	01.28.2026
5		

REGISTERED PROFESSIONAL ENGINEER
CHRISTOPHER S. FERGUSON
No. 58930
Exp. 6-30-27
STATE OF CALIFORNIA CIVIL

DRAWN : DJM
CHECKED : CSF
SCALE: : 1" = 10'-0"

SHEET TITLE:

GRADING
DETAILS & SECTIONS

SHEET

C1.1

13 OF 30 SHEETS

FUHRMAN LEAMY LAND GROUP HEREBY EXPRESSLY RESERVES ITS COMMON LAW COPYRIGHT AND OTHER PROPERTY RIGHTS IN THESE PLANS. THESE PLANS AND DRAWINGS ARE NOT TO BE REPRODUCED, CHANGED OR COPIED IN ANY FORM OR MANNER WHATSOEVER WITHOUT FIRST OBTAINING THE EXPRESS WRITTEN PERMISSION OF FUHRMAN LEAMY LAND GROUP NOR ARE THEY TO BE ASSIGNED TO ANY THIRD PARTY WITHOUT FIRST OBTAINING WRITTEN PERMISSION AND CONSENT

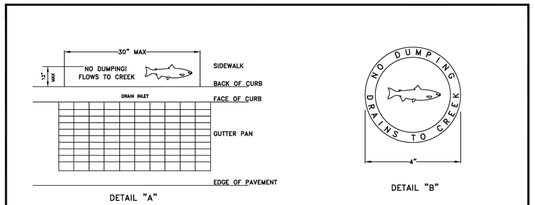

DETAIL "A"

DETAIL "B"

NOTES:

1. DETAIL "A" LETTERING SHALL BE 1 1/4 TO 1 1/2 INCHES HIGH. THE MESSAGE AND SYMBOL SHALL BE DEPRESSED 1/8 TO 1/4 INCH INTO THE CONCRETE. THE FISH SYMBOL SHALL BE A MINIMUM OF 11 INCHES LONG AND 3 1/2 INCHES HIGH.
2. DETAIL "A" SHALL BE PRE APPROVED BY THE CONSTRUCTION INSPECTOR PRIOR TO ITS USE.
3. DETAIL "A" SHALL APPLY TO ALL DRAIN INLET DESIGNS. WHERE THE SIDEWALK DOES NOT ADJOIN THE BACK OF CURB, THE NOTICE SHALL BE STAMPED IN THE CONCRETE BACKUP, BEHIND THE DRAIN INLET. WHERE THE DRAIN INLET IS PLACED IN A "V" GUTTER WITHOUT A CURB INLET, THE NOTICE SHALL BE STAMPED ON ONE SIDE OR THE OTHER, PARALLEL TO THE LENGTH OF THE INLET.
4. DETAIL "B" MAY BE PLACED WHERE DETAIL "A" DOES NOT WARRANT INSTALLATION AT THE DISCRETION OF THE PUBLIC WORKS CONSTRUCTION INSPECTOR. SEE DRAINAGE SECTION 101-8 OF THE DESIGN AND CONSTRUCTION STANDARDS FOR SPECIFICATIONS.
5. THE MESSAGE SHALL BE FREE OF BLEMISHES, LEGIBLE AND ACCEPTABLE TO THE CONSTRUCTION INSPECTOR.

RHON HERNDON
PUBLIC WORKS DIRECTOR

CITY OF ROSEVILLE CALIFORNIA — DEPARTMENT OF PUBLIC WORKS

"NO DUMPING"
PUBLIC NOTICE

SCALE: NONE
REVISED: JANUARY 1, 2010
DRAWN BY: J MCKINNEY
APPROVED BY: RHON HERNDON

DR-20

NOTES:

- ALL NEW AND REPLACEMENT STORM DRAIN INLETS ON THE PUBLIC RIGHT OF WAY, PRIVATE PROPERTY AND DRAINAGE EASEMENTS SHALL INCLUDE A "NO DUMPING – DRAINS TO CREEK" CONCRETE STAMP OR OTHER APPROVED EPOXY AFFIXED PERMANENT MARKER ON THE CURB ADJACENT TO THE DRAINAGE INLET. PER CITY STD DTL DR-20

A - DRAINAGE INLET (DI)
NOT TO SCALE

DROP INLET			
MODEL NO.	A	B	*WEIGHT
DI242436	36"	42"	1900 LBS.
DI242448	48"	54"	2500 LBS.

*BOX ONLY

FRAME AND GRATE			
MODEL NO.	RATING	D	WEIGHT
SG2424-DIP	PEDESTRIAN	1 1/2"	41 LBS.
SG2424-DIT	TRAFFIC	3"	120 LBS.

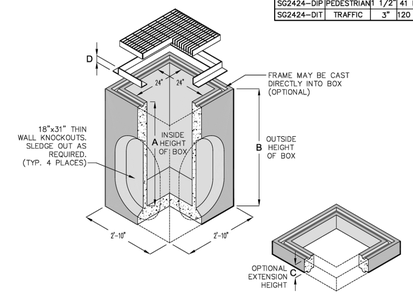

EXTENSION		
MODEL NO.	C	WEIGHT
RS242406	6"	300 LBS.
RS242412	12"	600 LBS.

- FRAME AND GRATE ASSEMBLY AVAILABLE IN TRAFFIC OR PEDESTRIAN MODELS.
- DESIGN FOR H-20-44 BRIDGE LOADING.
- ASSEMBLY TO BE PLACED ON A 6" BASE OF CRUSHER RUN FOR EASE OF INSTALLATION AND EVEN LOAD DISTRIBUTION.
- FOR COMPLETE DESIGN AND PRODUCT INFORMATION, CONTACT JENSEN PRECAST.
- ILLUSTRATION IS TYPICAL ONLY OF GENERAL SERIES CONFIGURATION; FOR SPECIFIC CONFIGURATION, CALL JENSEN PRECAST.

24" X 24" DRAIN INLET

APPL. APPV. DATE: 11-28-00

JENSEN PRECAST

DI2424

8.01

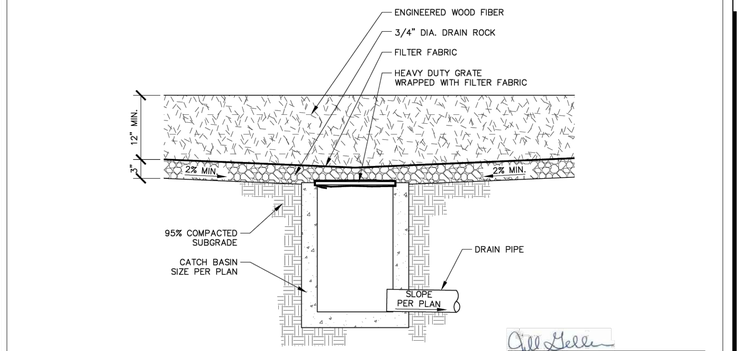

JILL GELLER, CPRE
PARKS, RECREATION & LIBRARIES DIRECTOR

CITY OF ROSEVILLE CALIFORNIA — PARKS, RECREATION, & LIBRARIES DEPARTMENT

PLAY AREA DRAIN

SCALE: NONE
REVISED: JULY 2025
REVIEWED BY: T. GEE
APPROVED BY: J. GELLER

PK-PL-3

B - PLAY AREA DRAIN DETAIL
NOT TO SCALE

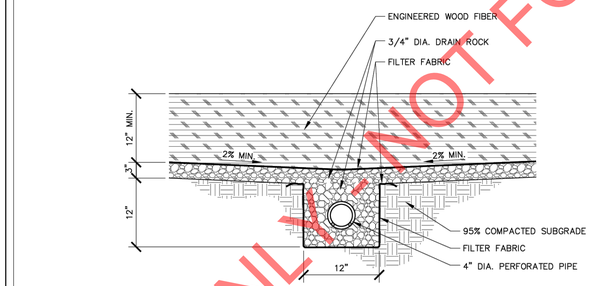

JILL GELLER, CPRE
PARKS, RECREATION & LIBRARIES DIRECTOR

CITY OF ROSEVILLE CALIFORNIA — PARKS, RECREATION, & LIBRARIES DEPARTMENT

PLAY AREA PERFORATED PIPE DRAIN

NOTES:
1. PERFORATED PIPE SHALL BE LAID IN A HERRINGBONE PATTERN AND CONNECTED TO A DRAIN INLET.
2. LOCATE ALL CLEAN OUTS OUTSIDE PLAY AREA WITHIN PLANTING/TURF AREAS.

SCALE: NONE
REVISED: JULY 2025
REVIEWED BY: T. GEE
APPROVED BY: J. GELLER

PK-PL-4

C - PLAY AREA PERFORATED DRAIN DETAIL
NOT TO SCALE

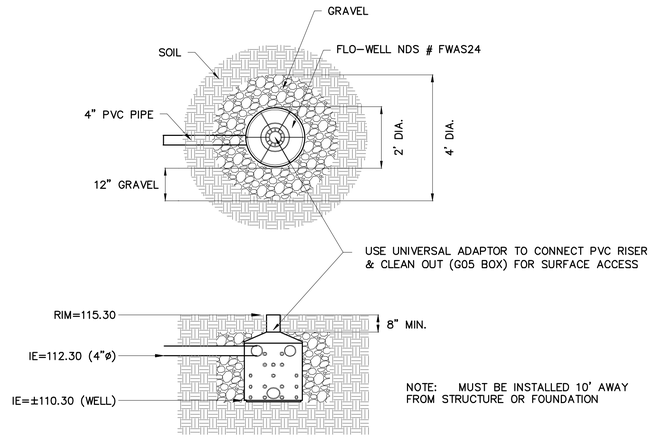

D - NDS FLO-WELL INSTALLATION DETAIL
NOT TO SCALE

NDS

FOR COUNCIL ONLY - NOT FOR CONSTRUCTION

785 Orchard Drive, Suite #110
Folsom, CA 95630
Phone: (916) 608-0707
Fax: (916) 608-0701
TSD ENGINEERING, INC.
expect more.

FUHRMAN LEAMY
LAND GROUP
DESIGN • SERVICE • SOLUTIONS

3400 DOUGLAS BLVD, SUITE 275
ROSEVILLE, CALIFORNIA 95661
916.783.5263 • FLLANDGROUP.COM

JOB NO. : CRV: 25027

CITY OF ROSEVILLE APPROVAL

PROJECT:

JM-52 PARK

5097 MISTY RIDGE DRIVE
ROSEVILLE, CA

CLIENT:
CITY OF ROSEVILLE

REVISIONS	DATE
1	
2	
3	
4	
5	

ISSUE		DATE
1	1ST SUBMITTAL	09.05.2025
2	2ND SUBMITTAL	10.08.2025
3	3RD SUBMITTAL	11.21.2025
4	4TH SUBMITTAL	01.28.2026

REGISTERED PROFESSIONAL ENGINEER — CASEY S. FEIGENBUT — No. 58930 Exp. 6-30-27 — CIVIL — STATE OF CALIFORNIA

DRAWN : DJM
CHECKED : CSF
SCALE: : 1" = 10'-0"

SHEET TITLE:

DRAINAGE
DETAILS - CITY

SHEET

C1.2

14 OF 30 SHEETS

EROSION CONTROL LEGEND

- LANDSCAPE AREA
- TURF AREA
- PCC PAVING AREA
- MAINTAIN NATIVE STABALIZED VEGETATION UNTIL READY FOR FINAL HYDROSEED
- DROP INLET
- SWALE
- LIMIT OF DISTURBANCE [1]
- FIBER ROLL [2]
- DRAIN INLET PROTECTION

EROSION CONTROL NOTES

[1] LIMIT OF DISTURBANCE. CONTRACTOR SHALL NOT DISTURB EXISTING VEGETATION OUTSIDE THESE LIMIT UNTIL SITE WORK IS COMPLETE. REFERENCE CASQA EC-2 FOR DETAILS

[2] PLACE FIBER ROLL AT LIMITS OF GRADING. REFERENCE CASQA SE-5 FOR DETAILS

[3] CONTRACTOR SHALL PROTECT STORM DRAIN INLETS. REFERENCE CASQA SE-10 FOR DETAILS

[4] INSTALL STABALIZED CONSTRUCTION ENTRANCE. REFERENCE CASQA TC-1 FOR DETAILS

1. EVERY FRIDAY AFTERNOON, THE ENTIRE STREET(S) FRONTAGE SHALL BE CLEANED AND PICKED UP WITH A STREET SWEEPER.
2. ADDITIONAL EROSION CONTROL METHODS MAY BE REQUIRED BY THE CITY OF ROSEVILLE & CASQA.
3. PLEASE REFERENCE SWPPP PLAN FOR DETAILED EROSION CONTROL METHODS.

EROSION CONTROL SCHEDULE

1. THE BMP INSPECTOR SHOULD INSPECT THE SITE ON A WEEKLY BASIS, AND BEFORE, DURING, AND AFTER ANY STORM GENERATING RUNOFF TO DETERMINE MAINTENANCE REQUIREMENTS AND GENERAL CONDITIONS OF THE INSTALLED SYSTEM. THE LOCAL AGENCY MAY ALSO INSPECT THE SITE ON A ROUTINE BASIS TO ASSESS THE MAINTENANCE PERFORMED ON THE SYSTEMS. ALL MAINTENANCE RELATED TO A STORM EVENT SHOULD BE COMPLETED WITHIN FORTY-EIGHT (48) HOURS OF THE STORM EVENT. THE FOLLOWING MAINTENANCE TASKS SHOULD BE PERFORMED ON A REGULAR BASIS:

A) REMOVAL OF SEDIMENT FROM BARRIERS AND SEDIMENTATION DEVICES.
B) REPLACEMENT OR REPAIR OF WORN OR DAMAGED SILT FENCE FABRICS.
C) REPLACEMENT OR REPAIR OF DAMAGED STRUCTURAL CONTROLS.
D) REPAIR OF DAMAGED SOIL STABILIZATION MEASURES.
E) OTHER CONTROL MAINTENANCE AS DEFINED IN EACH BMP FACT SHEET.

2. PRIOR TO A RAIN EVENT, OR IF AN AREA WILL NOT BE ACTIVELY WORKED ON WITHIN 14 DAYS, ALL DISTURBED OR EXPOSED SOILS SHALL BE PROTECTED, AT A MINIMUM, WITH A HYDROSEED/STRAW MULCH TACKIFIER 3-STEP APPLICATION, FIRST, A LAYER OF HYDROSEED CONSISTING OF NATIVE GRASSES OR TURF SEED WITH FERTILIZER SHALL BE EVENLY DISTRIBUTED ON DISTURBED AREA. THEN APPLY A LAYER OF STRAW MULCH IN PLACE. THIS IS A MINIMUM GUIDE ONLY. CONTRACTOR IS RESPONSIBLE FOR DETERMINING AND INSTALLING THE APPROPRIATE LEVEL OF EROSION AND SEDIMENT CONTROL.

3. PLAN SHOWN IS A BASIC DESIGN & FOR EROSION CONTROL BMP'S CONTRACTOR SHALL MODIFY WITH ASSISTANCE OF QSD/QSP BASED ON SITE CONDITIONS, PROJECT SCHEDULING PHASE OF CONSTRUCTION, TIME OF YEAR, AND APPROXIMATE RAINFALL EVENTS.

SWPPP NOTE:

EROSION CONTROL PLAN AND ASSOCIATED NOTES AND DETAILS HAVE BEEN PROVIDED FOR PERMITTING PURPOSES ONLY. CONTRACTOR SHALL IMPLEMENT/ INSTALL/ COORDINATE PER SWPPP & WDID# APPROVED BY THE STATE WATER RESOURCES CONTROL BOARD PRIOR TO THE INSTALLATION, MAINTENANCE AND REMOVAL OF EROSION AND SEDIMENT CONTROL DEVICES AND/OR BMP'S

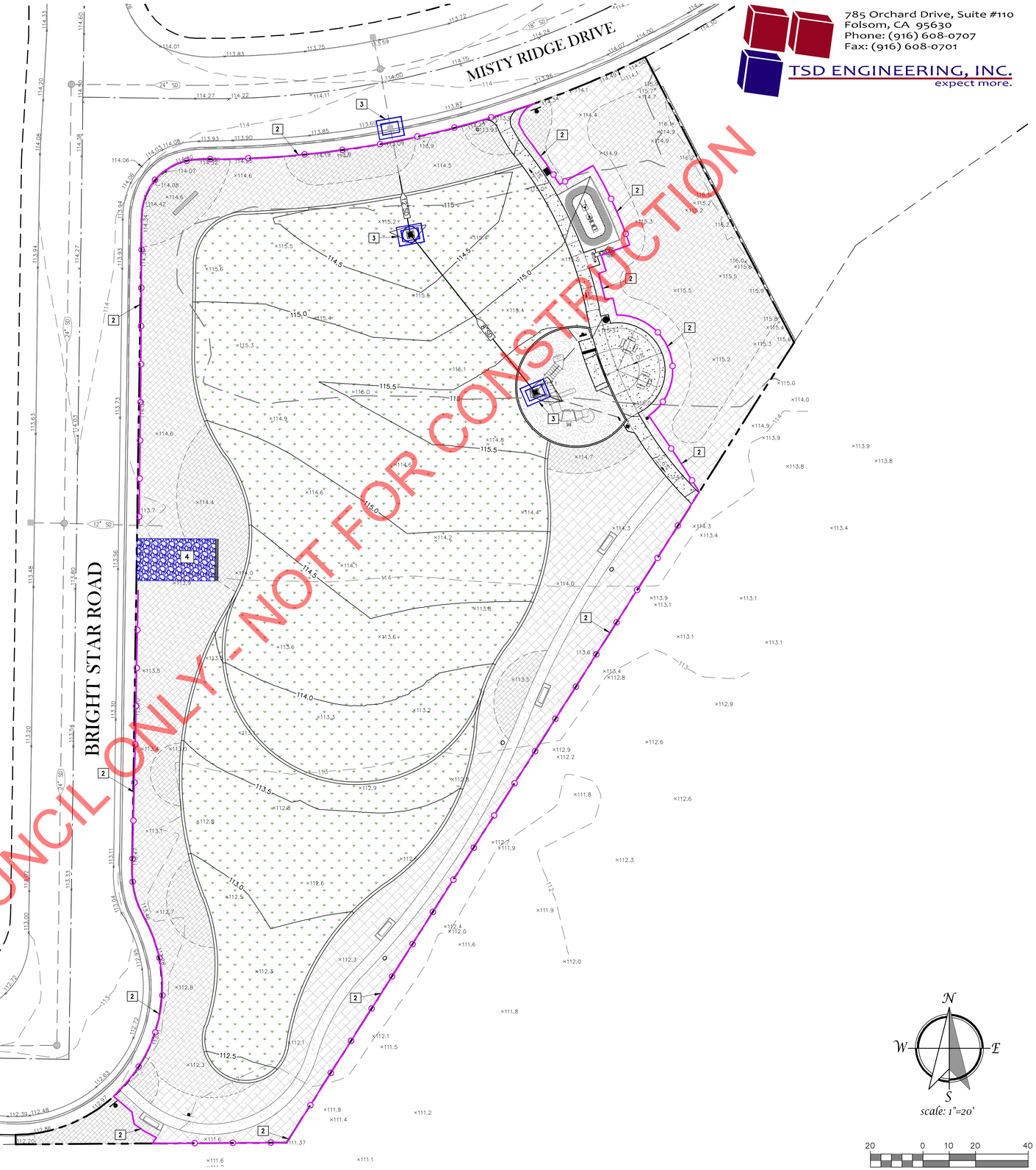

N
W E
S
scale: 1"=20'

20 0 10 20 40

TSD ENGINEERING, INC.
expect more.
785 Orchard Drive, Suite #110
Folsom, CA 95630
Phone: (916) 608-0707
Fax: (916) 608-0701

FUHRMAN LEAMY LAND GROUP
DESIGN • SERVICE • SOLUTIONS
3400 DOUGLAS BLVD, SUITE 275
ROSEVILLE, CALIFORNIA 95661
916.783.5263 • FLLANDGROUP.COM

JOB NO. : CRV: 25027

CITY OF ROSEVILLE APPROVAL

PROJECT:

JM-52 PARK

5097 MISTY RIDGE DRIVE
ROSEVILLE, CA

CLIENT:
CITY OF ROSEVILLE

REVISIONS	DATE
△	
△	
△	
△	

ISSUE		DATE
1	1ST SUBMITTAL	09.05.2025
2	2ND SUBMITTAL	10.08.2025
3	3RD SUBMITTAL	11.21.2025
4	4TH SUBMITTAL	01.28.2026
5		

REGISTERED PROFESSIONAL ENGINEER
CASEY S. FETCHER
No. 58930
Exp. 6-30-27
CIVIL
STATE OF CALIFORNIA

DRAWN : DJM
CHECKED : CSF
SCALE: : 1" = 20'-0"

SHEET TITLE:

EROSION CONTROL PLAN

SHEET

C2.0

15 OF 30 SHEETS

FUHRMAN LEAMY LAND GROUP HEREBY EXPRESSLY RESERVES ITS COMMON LAW COPYRIGHT AND OTHER PROPERTY RIGHTS IN THESE PLANS. THESE PLANS AND DRAWINGS ARE NOT TO BE REPRODUCED, CHANGED OR COPIED IN ANY FORM OR MANNER WHATSOEVER WITHOUT FIRST OBTAINING THE EXPRESS WRITTEN PERMISSION OF FUHRMAN LEAMY LAND GROUP NOR ARE THEY TO BE ASSIGNED TO ANY THIRD PARTY WITHOUT FIRST OBTAINING WRITTEN PERMISSION AND CONSENT

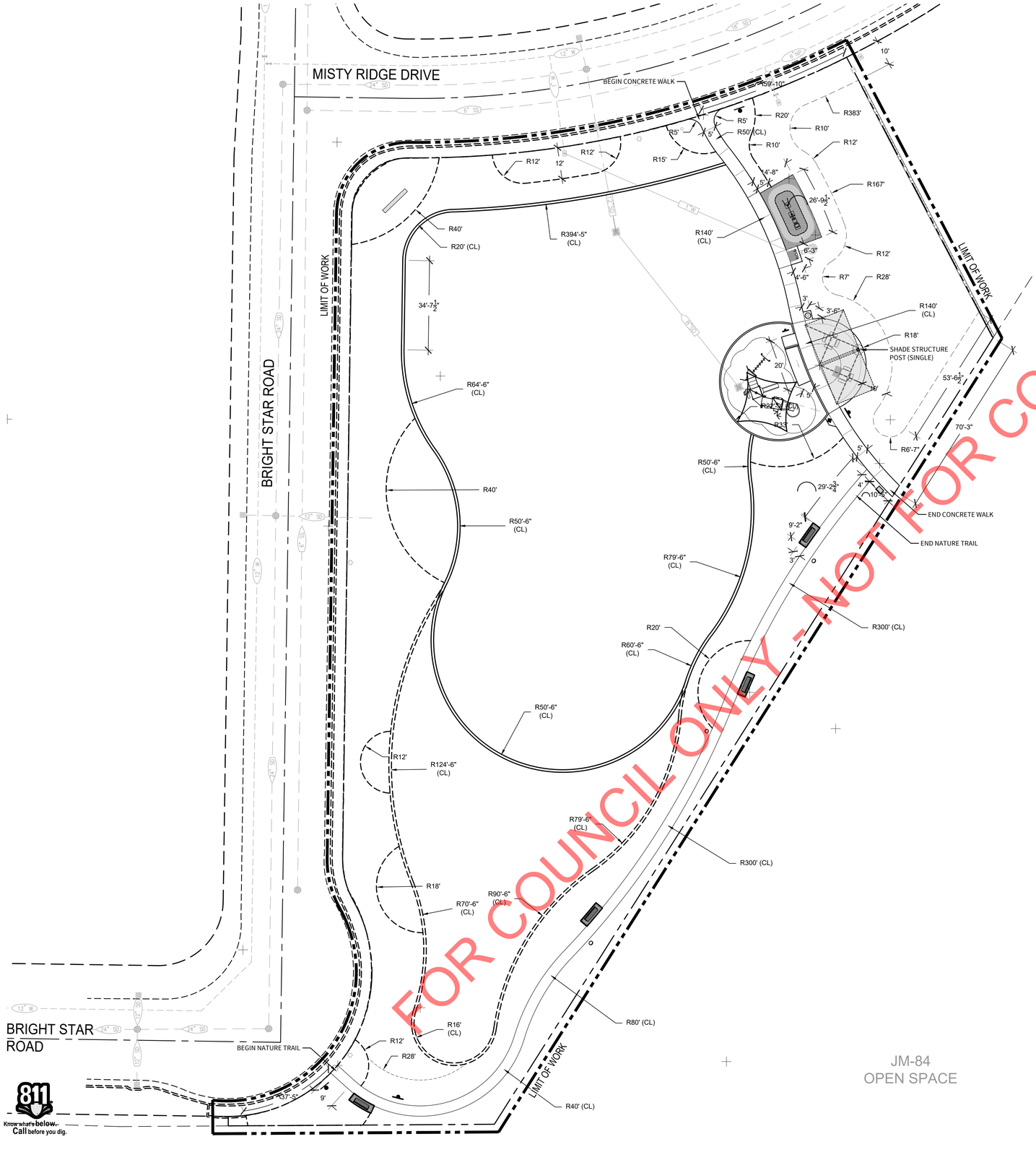

FOR COUNCIL ONLY - NOT FOR CONSTRUCTION

JM-84
OPEN SPACE

GENERAL LAYOUT NOTES

1. ALL DIMENSIONS ARE TO FACE OF WALLS, STAIRS, CURB AND EDGE OF CONCRETE WALKS, UNLESS OTHERWISE NOTED ON PLANS.
2. EXPANSION JOINTS AND SCORE LINES SHALL BE PLACED AS SHOWN ON PLAN. DESIRED MODULE IS 5'X5'. BRING TO THE PROJECT MANAGER'S ATTENTION IF ANY DEVIATIONS OCCUR DURING LAYOUT.
3. NEW CONCRETE FLATWORK FINISH SURFACE SHALL MEET FLUSH WITH EXISTING CONCRETE FLATWORK.
4. CONSTRUCT ALL CURVILINEAR SITE ELEMENTS WITH SMOOTH, CONTINUOUS, UNBROKEN CURVES.
5. MAINTAIN EXISTING GRADE AT THE BASE OF ALL EXISTING TREES WITHIN THE TREE DRIP LINE.
6. REFER TO IRRIGATION PLANS FOR LOCATIONS OF SLEEVES PRIOR TO THE START OF CONSTRUCTION.
7. UTILITIES ARE SHOWN FOR REFERENCE ON THESE PLANS. VERIFY ALL LOCATIONS PRIOR TO CONSTRUCTION. BRING TO PROJECT MANAGER'S ATTENTION IF THERE ARE ANY DISCREPANCIES BETWEEN DOCUMENTS AND FIELD CONDITION.
8. FINAL NATURE TRAIL ALIGNMENT TO BE CONFIRMED IN THE FIELD BY CITY PARKS STAFF.

NOTE

CONTRACTOR SHALL NOTIFY PROJECT MANAGER WHEN FIELD STAKING IS PLANNED TO OCCUR. LANDSCAPE ARCHITECT WILL PROVIDE ELECTRONIC FILES TO STAKING CONTRACTOR WHEN REQUESTED. SITE COMPONENTS SHALL BE LOCATED AND STAKED USING DIGITAL COORDINATES.

SCALE: 1" = 20'-0"

0' 20' 40' 80'

FUHRMAN LEAMY
LAND GROUP
DESIGN • SERVICE • SOLUTIONS

3400 DOUGLAS BLVD, SUITE 275
ROSEVILLE, CALIFORNIA 95661
916.783.5263 • FLLANDGROUP.COM

JOB NO. : CRV- 25027

CITY OF ROSEVILLE APPROVAL

PROJECT:

JM-52 PARK

5097 MISTY RIDGE DRIVE
ROSEVILLE, CA

CLIENT:
CITY OF ROSEVILLE

REVISIONS	DATE
△	
△	
△	
△	

ISSUE		DATE
1	1ST SUBMITTAL	9.05.2025
2	2ND SUBMITTAL	10.08.2025
3	3RD SUBMITTAL	11.21.2025
4	4TH SUBMITTAL	1.28.2026
5		

REGISTERED LANDSCAPE ARCHITECT
KEVIN C. LEAMY
No. 4965
12/31/26
Renewal Date
1.15.2026
Date
STATE OF CALIFORNIA

DRAWN : AM
CHECKED : KCL
SCALE: : 1"=20'-0"

SHEET TITLE:

LANDSCAPE LAYOUT PLAN

SHEET

LL-1.0

16 OF 30 SHEETS

FUHRMAN LEAMY LAND GROUP HEREBY EXPRESSLY RESERVES ITS COMMON LAW COPYRIGHT AND OTHER PROPERTY RIGHTS IN THESE PLANS. THESE PLANS AND DRAWINGS ARE NOT TO BE REPRODUCED, CHANGED OR COPIED IN ANY FORM OR MANNER WHATSOEVER WITHOUT FIRST OBTAINING THE EXPRESS WRITTEN PERMISSION OF FUHRMAN LEAMY LAND GROUP NOR ARE THEY TO BE ASSIGNED TO ANY THIRD PARTY WITHOUT FIRST OBTAINING WRITTEN PERMISSION AND CONSENT.

FUHRMAN LEAMY LAND GROUP HEREBY EXPRESSLY RESERVES ITS COMMON LAW COPYRIGHT AND OTHER PROPERTY RIGHTS IN THESE PLANS. THESE PLANS AND DRAWINGS ARE NOT TO BE REPRODUCED, CHANGED OR COPIED IN ANY FORM OR MANNER WHATSOEVER WITHOUT FIRST OBTAINING THE EXPRESS WRITTEN PERMISSION OF FUHRMAN LEAMY LAND GROUP NOR ARE THEY TO BE ASSIGNED TO ANY THIRD PARTY WITHOUT FIRST OBTAINING WRITTEN PERMISSION AND CONSENT.

ELECTRIC SERVICE SUPPLY FOR LANDSCAPE WORK

TESCO CONTROLS 100 AMP ELECTRIC SERVICE METER PANEL. SEE ELECTRIC ENGINEERING PLANS AND JOINT TRENCH PLANS FOR SERVICE LOCATION. PROVIDE PANEL PER ELECTRIC SERVICE PROVIDER.

POINT OF CONNECTION " J "

PROVIDE GATE VALVE ON WATER STUB PROVIDED BY CIVIL ENGINEER. VERIFY LOCATION IN FIELD.

WATER SUPPLY LINE SIZE:	1-1/2"
STATIC PSI:	65 PSI
WATER METER SIZE:	1-1/2" - RECYCLED
BACKFLOW DEVICE SIZE:	NA
OPERATING PSI:	60 PSI
BOOSTER INCREASE PSI:	NA
MAXIMUM FLOW DEMAND:	30.0 GPM
SITE ELEV DIFFERENCE:	3'

CONTROLLER " J "

CONTRACTOR TO MOUNT CONTROLLER PER MANUFACTURER'S SPECIFICATIONS. SEE IRRIGATION LEGEND AND DETAILS FOR MOUNTING TYPE AND ADDITIONAL INFORMATION. CONTRACTOR TO COORDINATE LOCATION AND ELECTRICAL SERVICE WITH OTHER TRADES.

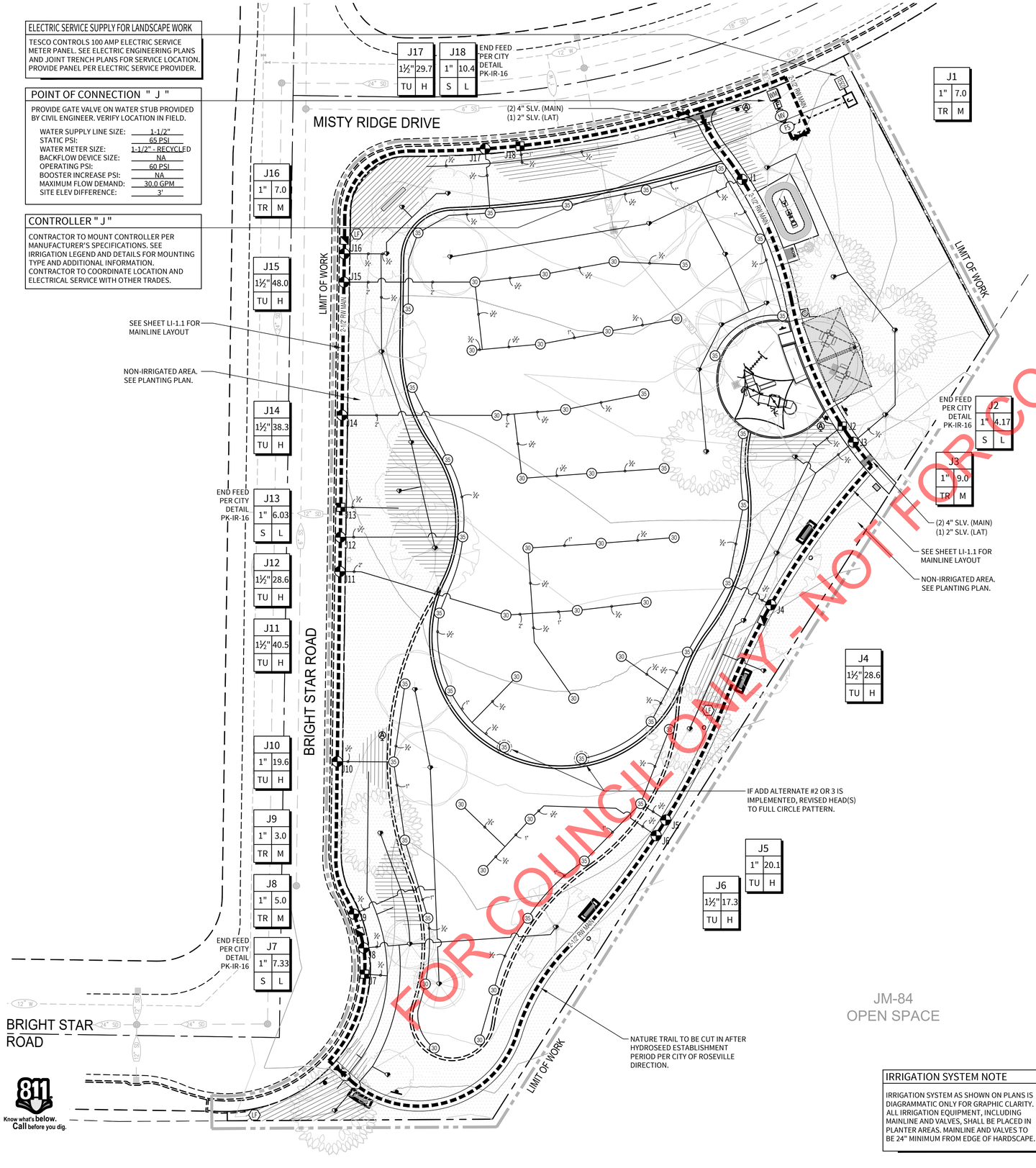

IRRIGATION LIST & LEGEND

SYMBOL	MANUFACTURER/MODEL/DESCRIPTION	PSI	DETAIL
1402	RAIN BIRD: RWS-B-C-P DEEP ROOT WATERING SYSTEM WITH CHECK VALVE AND PURPLE GRATE. RAINBIRD BUBBLER OPTION 1402 (0.50 GPM). CONTRACTOR TO PLACE (2) BUBBLERS PER TREE AS SHOWN ON PLANS.	30	J/LI-2.2
25 30 35	RAIN BIRD: 5006-PC-FC-NP-SS-MPR TURF ROTOR, 6" POP-UP, STAINLESS STEEL RISER, MATCHED PRECIP. ROTOR (MPR NOZZLE). ARC AND RADIUS AS PER SYMBOL (25 FT = RED, 30 FT = GREEN, 35 FT = BEIGE). WITH NON-POTABLE PURPLE CAP.	45	I/LI-2.2
SYMBOL	MANUFACTURER/MODEL/DESCRIPTION	PSI	DETAIL
	RAIN BIRD: XCZ-PRB-COM SERIES REMOTE CONTROL DRIP ZONE ASSEMBLY WITH PEB VALVE, PRESSURE REGULATING QUICK CHECK BASKET FILTER AND PURPLE HANDLE. SEE PLAN FOR SIZE. PROVIDE IN PURPLE VALVE BOX PER DETAIL.	--	A/LI-2.3
A	RAIN BIRD: ARV050 AIR RELIEF VALVE. PLACE AT HIGHEST POINT ON EACH EXHAUST HEADER. SEE PLAN FOR APPROXIMATE LOCATIONS.	--	C/LI-2.3
LF	LINE FLUSH VALVE: PER CITY SPECIFICATION PROVIDE AT THE LOWEST POINT ON EACH EXHAUST HEADER. SEE PLAN FOR APPROXIMATE LOCATIONS. PROVIDE OPERATION INDICATORS (OPERIND) AT ALL FLUSH VALVE LOCATIONS. INSTALL PER MANUFACTURER SPECIFICATIONS AND PK-16.	--	B/LI-2.3
	AREA TO RECEIVE DRIPLINE - RAIN BIRD: XFS-CV-06-18 SUB-SURFACE DRIPPER LINE WITH 0.6 GPH FLOW RATE AND 18" DRIPPER SPACING, PLACED AT 18" O.C. PROVIDE 6" BELOW GRADE OF TOP DRESSING (4" BELOW FINISHED SOIL GRADE). SPECIFY XF INSERT FITTINGS. INSTALL PER MANUFACTURER SPECIFICATIONS.	30	F/LI-2.3
SYMBOL	MANUFACTURER/MODEL/DESCRIPTION		DETAIL
	RAIN BIRD: PEBR REMOTE CONTROL VALVE WITH PURPLE FLOW CONTROL HANDLE FOR RECLAIMED WATER. SEE PLAN FOR SIZE. PROVIDE IN VALVE BOX PER DETAIL.		H/LI-2.2
	RAIN BIRD: 44-NP 1" BRASS QUICK COUPLING VALVE WITH PURPLE LOCKING RUBBER COVER FOR RECLAIMED WATER. PROVIDE IN VALVE BOX PER DETAIL.		G/LI-2.2
	NIBCO: T-113 CLASS 125 BRONZE, THREADED GATE VALVE WITH WHEEL HANDLE (LINE SIZE 2-1/2" AND SMALLER). PROVIDE IN PURPLE VALVE BOX PER DETAIL.		F/LI-2.2
MV	BUCKNER-SUPERIOR: 3300-150-RW 1-1/2" NORMALLY OPEN BRASS MASTER VALVE THAT PROVIDES DIRTY WATER PROTECTION AND NO MINIMUM FLOW FEATURE WITH PURPLE CROSS HANDLE FOR RECLAIMED WATER USE.		B/LI-2.2
J	CALSENSE: CS3-24-S1/CS3-EN/GR-STUBBY/FM-U 24-STATION AUTOMATIC CONTROLLER PER CITY STANDARD. PROVIDE IN STAINLESS STEEL PEDESTAL MOUNT ENCLOSURE WITH AUTOMATIC RAIN SHUT OFF DEVICE. INSTALL PER MANUFACTURER SPECIFICATIONS. NOTE: CONTRACTOR TO PROVIDE THIRD-PARTY COMMUNICATION HARDWARE PER CITY OF ROSEVILLE STANDARDS.		A/LI-2.2
FS	CALSENSE: FM-U 1-1/2" ULTRASONIC FLOW METER PER CITY OF ROSEVILLE CONSTRUCTION STANDARDS. INSTALL PER MANUFACTURER SPECIFICATIONS.		B/LI-2.2
F	AMIAD: 2" PLASTIC SUPER-T, SEMI-AUTOMATIC WATER FILTER WITH SCANAWAY 130 MICRON FILTER ELEMENT PER CITY OF ROSEVILLE CONSTRUCTION STANDARDS. INSTALL PER MANUFACTURER SPECIFICATIONS.		C/LI-2.2
TESCO	TESCO PEDESTAL (OR APPROVED EQUAL): ELECTRICAL PEDESTAL. SEE ELECTRICAL PLANS.		--
WM	WATER METER: 1-1/2" RECYCLED PER CIVIL PLANS.		--
	IRRIGATION LATERAL LINE: PVC SCHEDULE 40		D & E/LI-2.2
	IRRIGATION MAINLINE: PVC SCHEDULE 40		D & E/LI-2.2
	PIPE SLEEVE: PVC SCHEDULE 40. INSTALL SLEEVES TWICE THE DIAMETER OF THE PIPE. EXTEND 12" MINIMUM PAST HARDSCAPE EDGES. SEE PLANS.		D & E/LI-2.2
	CONDUIT: PVC SCHEDULE 40. 2" MIN. DIAMETER FOR LOW VOLTAGE WIRING		D & E/LI-2.2

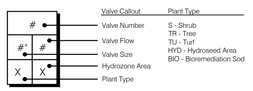

WATER AUDIT NOTE:
CONTRACTOR IS REQUIRED TO PROVIDE THE CITY OF ROSEVILLE A LANDSCAPE IRRIGATION AUDIT PERFORMED BY A 3RD PARTY CERTIFIED LANDSCAPE IRRIGATION AUDITOR. THE AUDIT MUST MEET CURRENT MWELO MANDATES. SEE PARKS CONSTRUCTION STANDARDS FOR ADDITIONAL INFORMATION.

IRRIGATION SYSTEM NOTE

IRRIGATION SYSTEM AS SHOWN ON PLANS IS DIAGRAMMATIC ONLY FOR GRAPHIC CLARITY. ALL IRRIGATION EQUIPMENT, INCLUDING MAINLINE AND VALVES, SHALL BE PLACED IN PLANTER AREAS. MAINLINE AND VALVES TO BE 24" MINIMUM FROM EDGE OF HARDSCAPE.

WATER EFFICIENT LANDSCAPE ORDINANCE:

"I have complied with the criteria of the Water Efficient Landscape Ordinance and applied such criteria for the efficient use of water in the irrigation design plan."

Applicant Signature	License #	Date
	4965	8.6.2025

SCALE: 1" = 20'-0"

0' 20' 80'
10' 40'

811 Know what's below. Call before you dig.

FUHRMAN LEAMY
LAND GROUP
DESIGN • SERVICE • SOLUTIONS
3400 DOUGLAS BLVD, SUITE 275
ROSEVILLE, CALIFORNIA 95661
916.783.5263 • FLLANDGROUP.COM

JOB NO. : CRV: 25027

CITY OF ROSEVILLE APPROVAL

PROJECT:

JM-52 PARK

5097 MISTY RIDGE DRIVE
ROSEVILLE, CA

CLIENT:
CITY OF ROSEVILLE

REVISIONS	DATE
△	
△	
△	
△	

ISSUE		DATE
1	1ST SUBMITTAL	9.05.2025
2	2ND SUBMITTAL	10.08.2025
3	3RD SUBMITTAL	11.21.2025
4	4TH SUBMITTAL	1.28.2026
5		

REGISTERED LANDSCAPE ARCHITECT
KEVIN C. LEAMY
No. 4965
12/31/26
Renewal Date
1.15.2026
Date
STATE OF CALIFORNIA

DRAWN : AM
CHECKED : KCL
SCALE: : 1"=20'-0"

SHEET TITLE:

LANDSCAPE IRRIGATION PLAN & LEGEND

SHEET

LI-1.0

17 OF 30 SHEETS

FUHRMAN LEAMY LAND GROUP HEREBY EXPRESSLY RESERVES ITS COMMON LAW COPYRIGHT AND OTHER PROPERTY RIGHTS IN THESE PLANS. THESE PLANS AND DRAWINGS ARE NOT TO BE REPRODUCED, CHANGED OR COPIED IN ANY FORM OR MANNER WHATSOEVER WITHOUT FIRST OBTAINING THE EXPRESS WRITTEN PERMISSION OF FUHRMAN LEAMY LAND GROUP NOR ARE THEY TO BE ASSIGNED TO ANY THIRD PARTY WITHOUT FIRST OBTAINING WRITTEN PERMISSION AND CONSENT.

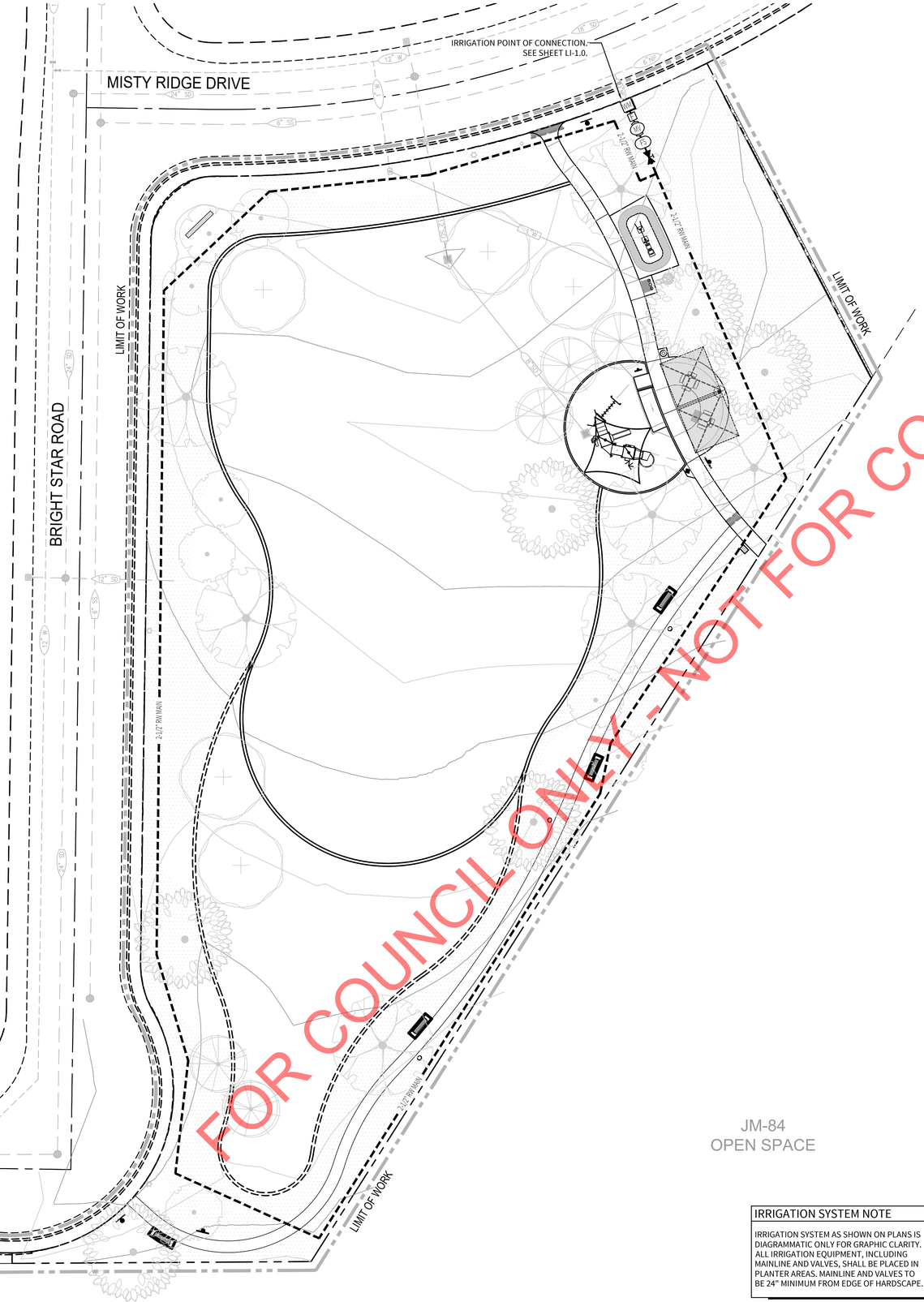

FOR COUNCIL ONLY - NOT FOR CONSTRUCTION

811 Know what's below. Call before you dig.

IRRIGATION SYSTEM NOTE
IRRIGATION SYSTEM AS SHOWN ON PLANS IS DIAGRAMMATIC ONLY FOR GRAPHIC CLARITY. ALL IRRIGATION EQUIPMENT, INCLUDING MAINLINE AND VALVES, SHALL BE PLACED IN PLANTER AREAS. MAINLINE AND VALVES TO BE 24" MINIMUM FROM EDGE OF HARDSCAPE.

WATER EFFICIENT LANDSCAPE ORDINANCE:

"I have complied with the criteria of the Water Efficient Landscape Ordinance and applied such criteria for the efficient use of water in the irrigation design plan."

Applicant Signature	License #	Date
	4965	8.6.2025

SCALE: 1" = 20'-0"

0' 20' 80'

10' 40'

FUHRMAN LEAMY
LAND GROUP
DESIGN • SERVICE • SOLUTIONS

3400 DOUGLAS BLVD, SUITE 275
ROSEVILLE, CALIFORNIA 95661
916.783.5263 • FLLANDGROUP.COM

JOB NO. : CRV- 25027

CITY OF ROSEVILLE APPROVAL

PROJECT:

JM-52 PARK

5097 MISTY RIDGE DRIVE
ROSEVILLE, CA

CLIENT:
CITY OF ROSEVILLE

REVISIONS	DATE
1	
2	
3	
4	

ISSUE		DATE
1	1ST SUBMITTAL	9.05.2025
2	2ND SUBMITTAL	10.08.2025
3	3RD SUBMITTAL	11.21.2025
4	4TH SUBMITTAL	1.28.2026
5		

REGISTERED LANDSCAPE ARCHITECT
KEVIN C. LEAMY
No. 4965
12/31/26
Renewal Date
1.15.2026
Date
STATE OF CALIFORNIA

DRAWN : AM
CHECKED : KCL
SCALE: : 1"=20'-0"

SHEET TITLE:

LANDSCAPE IRRIGATION PLAN - MAINLINE LAYOUT

SHEET

LI-1.1

18 OF 30 SHEETS

FUHRMAN LEAMY LAND GROUP HEREBY EXPRESSLY RESERVES ITS COMMON LAW COPYRIGHT AND OTHER PROPERTY RIGHTS IN THESE PLANS. THESE PLANS AND DRAWINGS ARE NOT TO BE REPRODUCED, CHANGED OR COPIED IN ANY FORM OR MANNER WHATSOEVER WITHOUT FIRST OBTAINING THE EXPRESS WRITTEN PERMISSION OF FUHRMAN LEAMY LAND GROUP NOR ARE THEY TO BE ASSIGNED TO ANY THIRD PARTY WITHOUT FIRST OBTAINING WRITTEN PERMISSION AND CONSENT.

CITY OF ROSEVILLE RECYCLED WATER NOTES

1. THE INSTALLATION OF THE RECYCLED WATER SYSTEM SHALL CONFORM TO THE REGULATIONS FOR THE CONSTRUCTION OF RECYCLED WATER SYSTEMS WITHIN THE CITY OF ROSEVILLE AND THE ACCOMPANYING PLANS AND SPECIFICATIONS.

2. ALL ON-SITE RECYCLED AND POTABLE WATER PIPING INSTALLED ON THIS PROJECT SHALL BE IDENTIFIED IN ACCORDANCE WITH THE CITY OF ROSEVILLE CONSTRUCTION STANDARDS FOR RECYCLED WATER INFRASTRUCTURE AND THE IRRIGATION SPECIFICATIONS.

3. CITY OF ROSEVILLE ENVIRONMENTAL UTILITIES DEPARTMENT SHALL BE NOTIFIED TWO DAYS PRIOR TO THE START OF CONSTRUCTION AT (916) 774-5750 AND EACH WORKDAY THEREAFTER UNTIL COMPLETION OF THE PROJECT FOR COMMERCIAL IRRIGATION SYSTEMS. CITY OF ROSEVILLE PARKS DEPARTMENT SHALL BE NOTIFIED TWO DAYS PRIOR TO THE START OF CONSTRUCTION AT (916) 746-1758 FOR LANDSCAPE CORRIDORS AND PARKS. A PRE-CONSTRUCTION MATERIALS INSPECTION MUST BE ARRANGED PRIOR TO THE START OF CONSTRUCTION.

4. NO FACILITY IS TO BE BACKFILLED UNTIL INSPECTED BY THE CITY OF ROSEVILLE ENVIRONMENTAL UTILITIES DEPARTMENT AND/OR PARKS DEPARTMENT INSPECTOR.

5. ALL RECYCLED WATER INFRASTRUCTURE, BOTH ON-SITE AND OFF-SITE SHALL BE INSPECTED BY CITY OF ROSEVILLE ENVIRONMENTAL UTILITIES AND/OR PARKS DEPARTMENT. FOR INSPECTION OF RECYCLED WATER SYSTEM CONTACT ENVIRONMENTAL UTILITIES AT 774-5750 FORTY-EIGHT (48) HOURS IN ADVANCE. POINTS OF INSPECTION ARE:

   a. PRE-CONSTRUCTION MATERIALS INSPECTION.
   b. IRRIGATION SYSTEM INSTALLATION BEFORE LINES ARE COVERED.
   c. PRESSURE TESTING.
   d. SYSTEM CROSS CONNECTION CONTROL TEST.
   e. SYSTEM COVERAGE TEST.

6. ALL RECYCLED WATER PIPING SHALL BE PURPLE COLORED PVC UNLESS OTHERWISE SPECIFIED. WHERE PURPLE PVC IS NOT USED, PIPE SHALL BE IDENTIFIED (MARKED) IN ACCORDANCE WITH THE CITY OF ROSEVILLE CONSTRUCTION STANDARDS.

7. MARKING ON THE PURPLE COLORED PVC PIPE SHALL INLCUDE THE FOLLOWING:
   "CAUTION: RECYCLED WATER - DO NOT DRINK". NOMINAL PIPE SIZE. PVC - 1120. PRESSURE RATING IN POUNDS PER SQUARE INCH AT 73 DEGREES. ASTM DESIGNATIONS SUCH AS 1785, 2241, 1672, 3139. PRINTING SHALL BE PLACED CONTINUOUSLY ON TWO SIDES OF THE PIPE.

8. ALL RECYCLED WATER SPRINKLER CONTROL VALVES, VALVE RISERS AND SWING JOINTS SHALL BE TAGGED WITH IDENTIFICATION TAGS OR ADHESIVE LABELS.

   a. TAGS SHALL BE WEATHERPROOF PLASTIC, 3"x4", PURPLE COLOR WITH THE WORDS "WARNING: RECYCLED WATER - DO NOT DRINK" IMPRINTED ON ONE SIDE AND "AVISA: AGUA IMPURA - NO TOMAR" ON THE OTHER SIDE. IMPRINTING SHALL BE PERMANENT AND BLACK IN COLOR. USE TAGS AS MANUFACTURED BY T. CHRISTY ENTERPRISES OR APPROVED EQUAL.

   b. ONE TAG SHALL BE ATTACHED TO EACH VALVE AS FOLLOWS:
      1. ATTACH TO VALVE STEM DIRECTLY OR WITH PLASTIC TIE-WRAP, OR
      2. ATTACH TO SOLENOID WIRE DIRECTLY OR WITH PLASTIC TIE-WRAP.

   c. RECYCLED WATER WARNING LABELS OR STICKERS THAT ARE CONSISTENT WITH CITY OR ROSEVILLE CONSTRUCTION STANDARDS FOR RECYCLED WATER INFRASTRUCTURE AND THE IRRIGATION SPECIFICATIONS MUST BE ATTACHED TO ALL PIPING NOT IN COMPLIANCE.

   d. ALL SPRINKLER HEADS MUST BE DESIGNED FOR RECYCLED WATER USAGE, WITH PURPLE RECYCLED WATER WARNING CAPS.

   e. SPRINKLER RISERS AND SWING JOINTS SHALL BE IDENTIFIED WITH PURPLE ADHESIVE 3"x3" LABELS. EACH LABEL SHALL STATE "RECYCLED WATER - DO NOT DRINK" IN ENGLISH AND SPANISH.

9. ALL RECYCLED WATER CONTROL VALVE BOXES SHALL BE PURPLE AND HAVE A WARNING LABEL PERMANENTLY MOLDED INTO OR AFFIXED ONTO THE LID WITH RIVETS, BOLTS, ETC. WARNING LABELS SHALL BE CONSTRUCTED OF A PURPLE WEATHERPROOF MATERIAL WITH THE WARNING PERMANENTLY STAMPED OR MOLDED INTO THE LABEL. THE WARNING SHALL CONTAIN THE FOLLOWING INFORMATION:

   a. "NON-POTABLE" OR "RECYCLED WATER"
   b. "DO NOT DRINK" IN ENGLISH AND SPANISH.

10. RECYCLED WATER QUICK COUPLING VALVES SHALL HAVE A PURPLE RUBBER OR VINYL COVER. THE COVER SHALL BE OF A LOCKING TYPE AND HAVE A WARNING PERMANENTLY STAMPED OR MOLDED AS FOLLOWS: "RECYCLED WATER - DO NOT DRINK" IN ENGLISH AND SPANISH.

11. PLASTIC WARNING TAPE SHALL BE USED ON ALL POTABLE WATER PIPING, POTABLE WATER WARNING TAPE SHALL BE A MINIMUM OF 3" WIDE AND SHALL RUN CONTINUOUSLY FOR THE ENTIRE LENGTH OF EACH LINE. THE TAPE SHALL BE ATTACHED TO THE TOP OF THE PIPE WITH NYLON TIE-WRAP BANDED AROUND THE WARNING TAPE AND THE PIPE EVERY FIVE FEET ON CENTER. WARNING TAPE FOR THE POTABLE WATER PIPING SHALL BE BLUE IN COLOR WITH WORDS "CAUTION: POTABLE WATER LINE BURIED BELOW" IMPRINTED IN MINIMUM 1" HIGH LETTERS, BLACK IN COLOR. IMPRINTING SHALL BE CONTINUOUS AND PERMANENT.

12. ALL PRESSURE MAIN LINE PIPING FROM THE RECYCLED WATER SYSTEM SHALL BE INSTALLED TO MAINTAIN 10 FEET MINIMUM HORIZONTAL SEPARATION FROM ALL POTABLE WATER PIPING. WHERE RECYCLED AND POTABLE WATER PRESSURE MAIN LINE PIPING CROSS, THE RECYCLED WATER PIPING SHALL BE INSTALLED 12" BELOW THE POTABLE WATER PIPING OD TO OD. WHERE THE RECYCLED WATER PRESSURE MAIN LINE MUST PASS ABOVE POTABLE WATER PIPING, THE RECYCLED WATER PIPING SHALL BE INSTALLED IN A CLASS 200 PURPLE COLORED PVC SLEEVE WHICH EXTENDS A MINIMUM OF FIVE FEET ON EITHER SIDE OF THE POTABLE WATER PIPING. A 12" VERTICAL SEPARATION OD TO OD MUST BE MAINTAINED. CONVENTIONAL (WHITE) PVC PIPE MAY BE USED FOR SLEEVING MATERIAL IF IT IS TAPED WITH 3" WIDE PURPLE WARNING TAPE WHICH READS "RECYCLED WATER - DO NOT DRINK".

13. ALL PRESSURE MAIN LINE PIPING FROM THE RECYCLED WATER SYSTEM SHALL BE INSTALLED TO MAINTAIN A 10' MINIMUM HORIZONTAL SEPARATION FROM ALL SANITARY SEWER LINES. WHERE RECYCLED WATER AND SEWER CROSS, THE RECYCLED WATER PIPING SHALL BE INSTALLED A MINIMUM OF ONE FOOT ABOVE THE SEWER LINE.

14. FOR ON-SITE RECLAIMED WATER PIPING, THE MINIMUM DEPTH FROM FINISH GRADE TO TOP OF PIPE SHALL BE AS FOLLOWS:

   a. INTERMITTENT PRESSURE LINES (ALL SIZES).....12"
   b. CONSTANT PRESSURE LINES 2.5" AND SMALLER.....18"
   c. CONSTANT PRESSURE LINES 3" AND LARGER.....24"

15. PRESSURE AND CROSS CONNECTION TESTING FOR ON-SITE RECYCLED WATER SYSTEMS

   a. ALL TESTING OF RECYCLED WATER SYSTEMS MUST BE PERFORMED UTILIZING A POTABLE WATER SOURCE VIA A CONSTRUCTION WATER CONNECTION PER CITY OF ROSEVILLE CONSTRUCTION STANDARDS. NO RECYCLED WATER MAY ENTER A RECYCLED WATER SYSTEM UNTIL ALL TESTING IS SUCCESSFULLY COMPLETED.

   b. THE SOURCE OF POTABLE WATER USED FOR TESTING MUST HAVE A METER AND AN APPROVED BACKFLOW PREVENTION DEVICE. THESE CAN BE OBTAINED THROUGH THE CITY OF ROSEVILLE.

   c. THE CONTRACTOR SHALL PROVIDE A MEANS TO PLUMB IN PRESSURE AND CROSS TESTING APPARATUS AT THE POINT OF HIGHEST ELEVATION FOR BOTH POTABLE AND CONSTANT PRESSURE RECYCLED WATER SYSTEMS.

   d. THE CONSTANT PRESSURE RECYCLED WATER SYSTEM INCLUDING ALL APPURTENANCES SHALL BE TESTED AT 125 PSI AT HIGHEST POINT OF ELEVATION FOR 1 HOUR WITH NO DETECTABLE LEAKAGE.

   e. PRESSURE TESTING MUST BE SUCCESSFULLY COMPLETED PRIOR TO CROSS CONNECTION TESTING.

   f. THE RECYCLED WATER SYSTEM SHALL BE TESTED FOR CROSS CONNECTION IN ACCORDANCE WITH UNIFORM PLUMBING CODE APPENDIX J PRIOR TO USE.

   g. FOR PROJECTS BEING PERFORMED IN PHASES, A CROSS CONNECTION TEST SHALL BE PERFORMED ON EACH PHASE INDEPENDENTLY BEFORE IT IS PUT INTO SERVICE. THE POTABLE WATER SOURCE USED FOR TESTING EACH PHASE MUST BE INDEPENDENT OF OTHER PREVIOUSLY COMPLETED PHASES.

   h. AT THE TIME A CROSS CONNECTION TEST IS TO BE PERFORMED, CONSTRUCTION ON BOTH THE POTABLE AND THE RECYCLED WATER SYSTEMS BEING TESTED MUST BE COMPLETE AND BOTH SYSTEMS FULLY OPERATIONAL AND FUNCTIONING AS DESIGNED.

   i. CROSS CONNECTION TESTING SHALL BE PERFORMED ON THE SYSTEM BY CITY FORCES WITH THE ASSISTANCE OF THE CONTRACTOR. THE TEST WILL BE COORDINATED THROUGH THE ENVIRONMENTAL UTILITIES OR PARKS DEPARTMENT INSPECTOR. FORTY-EIGHT (48) HOURS NOTICE IS REQUIRED BEFORE THE TEST. DEPENDING ON THE COMPLEXITY OF THE SITE, A PRELIMINARY FIELD MEET MAY ALSO BE REQUIRED.

16. COVERAGE TEST:
    ADJUST SPRAY HEADS TO ELIMINATE OVERSPRAY ONTO NATIVE OAK AREAS AND INTO AREAS NOT UNDER THE CONTROL OF THE CUSTOMER. FOR EXAMPLE: POOL DECKS, PRIVATE PATIOS, STREETS AND SIDEWALKS.

17. METER INSTALLATION:
    ONCE THE ON-SITE RECYCLED WATER SYSTEM HAS BEEN PROPERLY INSPECTED AND PASSED PRESSURE AND CROSS CONNECTION TESTING, A METER MAY BE INSTALLED. THE METER MUST BE PURCHASED FROM THE CITY OF ROSEVILLE AND INSTALLED BY CITY FORCES. COORDINATE METER PURCHASE AND INSTALLATION WITH THE ENVIRONMENTAL UTILITIES OR PARKS DEPARTMENT INSPECTOR.

18. NO CONNECTION SHALL BE MADE TO THE CITY'S EXISTING RECYCLED WATER SYSTEM UNTIL THE NEW FACILITIES HAVE BEEN SUCCESSFULLY PRESSURE AND CROSS CONNECTION TESTED. TAPS TO THE EXISTING RECYCLED SYSTEM WILL BE MADE BY CITY FORCES ONLY.

19. FAILURE TO COMPLY WITH ANY OR ALL OF THE ABOVE GUIDELINES VIOLATES THE CITY OF ROSEVILLE DESIGN AND CONSTRUCTION STANDARDS FOR RECYCLED WATER INFRASTRUCTURE AND WILL RESULT IN TERMINATION OF SERVICE UNTIL THE APPROPRIATE CORRECTIVE STEPS HAVE BEEN TAKEN.

20. RECYCLE WATER WARNING/INFORMATION SIGN SHALL BE LOCATED AT ALL ACCESS POINTS TO THE AREA OF RECYCLED WATER USE. SIGNS SHALL ALSO BE PLACED ALONG FRONTAGE ROADS AT INTERVALS OF EVERY 500 FEET OR LESS. THE SIGNS SHALL BE INSTALLED IN ACCORDANCE WITH THE CONSTRUCTION STANDARDS HEREIN AND AS REQUIRED BY THE ENVIRONMENTAL UTILITIES DIRECTOR.

GENERAL IRRIGATION NOTES

1. ALL POP-UP TYPE SPRINKLER HEADS INSTALLED IN SHRUB OR GROUNDCOVER AREAS SHALL BE INSTALLED SO THAT THE TOP OF THE SPRINKLER HEAD IS 1" ABOVE FINISH GRADE.

2. ALL POP-UP TYPE SPRINKLER HEADS INSTALLED IN TURF AREAS SHALL BE INSTALLED SO THAT THE TOP OF THE SPRINKLER HEAD IS FLUSH WITH ADJACENT SIDEWALK OR CURB.

3. ALL SPRINKLER HEADS SHALL BE SET PERPENDICULAR TO FINISH GRADE OF THE AREA TO BE IRRIGATED UNLESS OTHERWISE DESIGNATED ON THE PLANS.

4. ALL SPRINKLERS SHALL BE INSTALLED WITH A 'CHECK VALVE' TO PREVENT DRAINAGE FROM SPRINKLER HEAD WHEN THE SPRINKLER IS OFF. DRAINAGE OF IRRIGATION WATER THROUGH SPRINKLER HEADS WILL NOT BE ALLOWED.

5. THE SPRINKLER SYSTEM DESIGN IS BASED ON THE MINIMUM OPERATING PRESSURE OF 65 PSI AND THE MAXIMUM FLOW OF 30.0 GPM AS SHOWN ON THE IRRIGATION DRAWINGS AT THE METER OR POINT OF CONNECTION. THE IRRIGATION CONTRACTOR SHALL VERIFY WATER PRESSURE PRIOR TO CONSTRUCTION. REPORT ANY DIFFERENCE BETWEEN THE WATER PRESSURE IRRIGATION POINT OF CONNECTION TO THE OWNER'S AUTHORIZED REPRESENTATIVE. IN THE EVENT THAT PRESSURE DIFFERENCES ARE NOT REPORTED PRIOR TO THE START OF CONSTRUCTION, THE IRRIGATION CONTRACTOR SHALL ASSUME FULL RESPONSIBILITY FOR ANY REVISIONS NECESSARY.

6. 120 VOLT ELECTRICAL POWER OUTLET AT THE AUTOMATIC CONTROLLER LOCATION SHALL BE PROVIDED BY OTHERS. IT SHALL BE THE RESPONSIBILITY OF THE IRRIGATION CONTRACTOR TO MAKE THE FINAL HOOK-UP FROM THE ELECTRICAL OUTLET TO THE AUTOMATIC CONTROLLER.

7. THIS DESIGN IS DIAGRAMMATIC. ALL PIPING, VALVES, ETC. SHOWN WITHIN PAVED AREAS IS FOR DESIGN CLARIFICATION ONLY AND SHALL BE INSTALLED IN PLANTING AREAS. AVOID ANY CONFLICTS BETWEEN THE SPRINKLER SYSTEM, PLANTING AND ARCHITECTURAL FEATURES.

8. THE IRRIGATION CONTRACTOR SHALL FLUSH AND ADJUST ALL SPRINKLER HEADS FOR OPTIMUM PERFORMANCE AND TO PREVENT OVER-SPRAY ONTO WALKS, ROADWAYS AND/OR BUILDINGS AS MUCH AS POSSIBLE. THIS SHALL INCLUDE SELECTING THE BEST DEGREE OF ARC TO FIT THE EXISTING SITE CONDITIONS AND TO THROTTLE THE FLOW CONTROL AT EACH VALVE TO OBTAIN THE OPTIMUM OPERATING PRESSURE FOR EACH SYSTEM.

9. DO NOT WILLFULLY INSTALL THE SPRINKLER SYSTEM AS SHOWN ON THE DRAWINGS WHEN IT IS OBVIOUS IN THE FIELD THAT OBSTRUCTIONS, GRADE DIFFERENCES OR DIFFERENCES IN THE AREA DIMENSIONS EXIST THAT MIGHT NOT HAVE BEEN CONSIDERED IN THE ENGINEERING. SUCH OBSTRUCTIONS OR DIFFERENCES SHOULD BE BROUGHT TO THE ATTENTION OF THE OWNER'S AUTHORIZED REPRESENTATIVE. IN THE EVENT THAT THIS NOTIFICATION IS NOT PERFORMED, THE IRRIGATION CONTRACTOR SHALL ASSUME FULL RESPONSIBILITY FOR ANY REVISIONS NECESSARY.

10. INSTALL ALL PIPE MATERIALS AND EQUIPMENT AS SHOWN IN THE DETAILS. USE TEFLON TAPE OR TEFLON PIPE DOPE ON ALL PVC MALE PIPE THREADS ON ALL SPRINKLER SWING JOINT AND VALVE ASSEMBLIES.

11. IT IS THE RESPONSIBILITY OF THE IRRIGATION CONTRACTOR TO FAMILIARIZE HIMSELF WITH ALL GRADE DIFFERENCES, LOCATION OF WALLS, RETAINING WALLS, ETC. HE SHALL COORDINATE HIS WORK WITH THE GENERAL CONTRACTOR AND OTHER SUB- CONTRACTORS FOR THE LOCATION AND THE INSTALLATION OF PIPE SLEEVES THROUGH WALLS, UNDER ROADWAYS, PAVING, STRUCTURES, ETC.

12. IN ADDITION TO THE CONTROL WIRE SLEEVES SHOWN ON THE DRAWINGS, THE IRRIGATION CONTRACTOR SHALL BE RESPONSIBLE FOR THE INSTALLATION OF CONTROL WIRE SLEEVES OF SUFFICIENT SIZE UNDER ALL OTHER PAVED AREAS.

13. IN ADDITION TO THE CONTROL WIRE NECESSARY FOR THE REMOTE CONTROL VALVES SHOWN ON THE DRAWING, THE CONTRACTOR SHALL PROVIDE A MINIMUM OF EIGHTEEN (18) INCHES OF A COMPLETE SET OF SPARE CONTROL WIRES, LOOPED, WITHIN EACH VALVE BOX.

14. CONTRACTOR SHALL PROGRAM IRRIGATION CONTROLLER TO OPERATE AS FOLLOWS POST-CONSTRUCTION: SPRAY VALVES SHALL ONLY BE TURNED ON BETWEEN THE HOURS OF 10:00 P.M. AND 6:00 A.M. BUBBLER AND DRIP VALVES CAN OPERATE AT ANY TIME.

15. PER MWELO, IRRIGATION HEADS MUST BE PLACED SO THAT HARDSCAPED AREAS DRAIN TOWARD LANDSCAPED AREAS, AND WITH NO OVERSPRAY. OTHERWISE A SETBACK FROM HARDSCAPE OF 24" MINIMUM IS REQUIRED.

16. ALL LANDSCAPE AUDITS SHALL BE CONDUCTED BY A THIRD PARTY CERTIFIED LANDSCAPE IRRIGATION AUDITOR.

17. THE PROJECT APPLICANT SHALL SUBMIT AN IRRIGATION AUDIT REPORT WITH THE CERTIFICATE OF COMPLETION TO THE RESPONSIBLE LOCAL AGENCY PER WELO REQUIREMENTS.

FOR CONSTRUCTION
NOT FOR CONSTRUCTION
FOR BIDDING ONLY

FUHRMAN LEAMY
LAND GROUP
DESIGN • SERVICE • SOLUTIONS

3400 DOUGLAS BLVD, SUITE 275
ROSEVILLE, CALIFORNIA 95661
916.783.5263 • FLLANDGROUP.COM

JOB NO. : CRV- 25027

CITY OF ROSEVILLE APPROVAL

PROJECT:

JM-52 PARK

5097 MISTY RIDGE DRIVE
ROSEVILLE, CA

CLIENT:
CITY OF ROSEVILLE

REVISIONS	DATE
△	
△	
△	
△	

ISSUE		DATE
1	1ST SUBMITTAL	9.05.2025
2	2ND SUBMITTAL	10.08.2025
3	3RD SUBMITTAL	11.21.2025
4	4TH SUBMITTAL	1.28.2026
5		

REGISTERED LANDSCAPE ARCHITECT
KEVIN C. LEAMY
No. 4965
STATE OF CALIFORNIA
12/31/26
Renewal Date
1.15.2026
Date

DRAWN : AM
CHECKED : KCL
SCALE: : AS SHOWN

SHEET TITLE:

LANDSCAPE IRRIGATION NOTES

SHEET

LI-2.0

19 OF 30 SHEETS

FUHRMAN LEAMY LAND GROUP RESERVES ITS COMMON LAW COPYRIGHT AND OTHER PROPERTY RIGHTS IN THESE PLANS. THESE PLANS AND DRAWINGS ARE NOT TO BE REPRODUCED, CHANGED OR COPIED IN ANY FORM OR MANNER WHATSOEVER NOR ARE THEY TO BE ASSIGNED TO ANY THIRD PARTY WITHOUT FIRST OBTAINING THE EXPRESS WRITTEN PERMISSION AND CONSENT OF FUHRMAN LEAMY LAND GROUP HEREBY EXPRESSLY RESERVES ITS COMMON LAW COPYRIGHT AND OTHER PROPERTY RIGHTS IN THESE PLANS. THESE PLANS AND DRAWINGS ARE NOT TO BE REPRODUCED, CHANGED OR COPIED IN ANY FORM OR MANNER WHATSOEVER WITHOUT FIRST OBTAINING THE EXPRESS WRITTEN PERMISSION OF FUHRMAN LEAMY LAND GROUP NOR ARE THEY TO BE ASSIGNED TO ANY THIRD PARTY WITHOUT FIRST OBTAINING WRITTEN PERMISSION AND CONSENT

WATER EFFICIENT LANDSCAPE WORKSHEET

FUHRMAN LEAMY LAND GROUP
DESIGN · SERVICE · SOLUTIONS

PROJECT: JM-52 PARK
LOCATION: ROSEVILLE, CA 95765
JOB#: CRV:25027
DATE: 11.15.2025

Appendix B

This w orksheet is filled out by the project applicant and it is a required element of the Landscape Documentation Package.

Reference Evapotranspiration (ETo) 52.2

Hydrozone # /Planting Description[a]	Plant Factor (PF)	Irrigation Method[b]	Irrigation Efficiency (IE)[c]	ETAF (PF/IE)	Landscape Area (sq. ft.)	ETAF x Area	Estimated Total Water Use (ETWU)[d]
Regular Landscape Areas							
					0		
				Totals	0	0.00	0.00
Special Landscape Areas							
J1 Tree				1	70	70.00	2265
J2 Shrub/GC				1	675	675.00	21846
J3 Tree				1	90	90.00	2913
J4 WS Turf				1	3,740	3740.00	121041
J5 WS Turf				1	2,620	2620.00	84794
J6 WS Turf				1	2,620	2620.00	84794
J7 Shrub/GC				1	985	985.00	31879
J8 Tree				1	50	50.00	1618
J9 Tree				1	30	30.00	971
J10 WS Turf				1	2,620	2620.00	84794
J11 WS Turf				1	4,690	4690.00	151787
J12 WS Turf				1	3,740	3740.00	121041
J13 Shrub/GC				1	1,140	1140.00	36895
J14 WS Turf				1	4,690	4690.00	151787
J15 WS Turf				1	4,690	4690.00	151787
J16 Tree				1	70	70.00	2265
J17 WS Turf				1	3,740	3740.00	121041
J18 Shrub/GC				1	1,720	1720.00	55666
				Totals	37,980	37980.00	1229185
Non Irrigated Landscape Areas							
Water Feature				1	0		
Non Irrigated					0		
				Totals	0	0.00	0
						ETWU Total	1229185
						Maximum Allowed Water Allowance (MAWA)e	1229185

[a] ***Hydrozone #/Planting Descrip.*** E.g. 1.) front lawn 2.) low water use plantings 3.) medium water use planting

[b] ***Irrigation Method*** overhead spray or drip

[c] ***Irrigation Efficiency*** 0.75 for spray head 0.81 for drip

[d] ***ETWU (Annual Gallons Required) =*** *Eto x 0.62 x ETAF x Area*
where 0.62 is a conversion factor that converts acre-inches per acre per year to gallons per square foot per year.

[e] ***MAWA (Annual Gallons Allowed) =*** *(Eto) (0.62) [(ETAF x LA) + ((1-ETAF) x SLA)]*
where 0.62 is a conversion factor that converts acre-inches per acre per year to gallons per square foot per year, LA is the total landscape area in square feet, SLA is the total special landscape area in square feet, and ETAF is .55 for residential areas

ETAF Calculations

Regular Landscape Areas

Total ETAF x Area	0
Total Area	0
Average ETAF	

Average ETAF for Regular Landscape Areas must be 0.55 or below for residential areas, and 0.45 or below for non-residential

All Landscape Areas

Total ETAF x Area	37980
Total Area	37,980
Sitewide ETAF	**1.00**

IRRIGATION SCHEDULE - COMMERCIAL

FUHRMAN LEAMY LAND GROUP
DESIGN · SERVICE · SOLUTIONS

PROJECT: JM-52 PARK
LOCATION: ROSEVILLE, CA 95765
JOB#: CRV:25027
DATE: 11.15.2025

CONTROLLER: J

VALVE	GPM	Landscape Area (S.F.)	PLANT TYPE	WATER USE	IRRIGATION METHOD	WATERING DAYS/WK	MAX RUN TIME/ CYCLE	ESTABLISHMENT PERIOD JAN	FEB	MAR	APR	MAY	JUN	JULY	AUG	SEP	OCT	NOV	DEC	MAINTENANCE PERIOD JAN	FEB	MAR	APR	MAY	JUN	JULY	AUG	SEP	OCT	NOV	DEC	PER VALVE PR (In/Yr)	MAWA (Gal/Yr)	ETWU (Gal/Yr)
								MONTHLY ETO												MONTHLY ETO														
								1.1	1.7	3.1	4.7	6.2	7.7	8.5	7.3	5.6	3.7	1.7	1	1.1	1.7	3.1	4.7	6.2	7.7	8.5	7.3	5.6	3.7	1.7	1			
								RUN TIME IN MINUTES/DAY												RUN TIME IN MINUTES/DAY														
J1	7.0	70	Tree	Med	Bubblers/Drip	4	0.62	0	0	1	1	2	2	2	2	1	0	0		0	0	1	1	2	2	2	2	1	1	0	0	21.67	2265	2265
J2	4.2	675	Shrub/GC	Low	Bubblers/Drip	3	10.09	4	6	11	17	23	28	31	27	20	14	6	4	3	5	9	13	17	22	24	21	16	10	5	3	17.14	21846	21846
J3	9.0	90	Tree	Med	Bubblers/Drip	4	0.62	0	0	1	1	2	2	2	2	1	0	0		0	0	1	1	2	2	2	2	1	1	0	0	21.67	2913	2913
J4	28.6	3,740	WS Turf	High	Stream Spray/Rotors	5	8.15	6	9	16	24	32	39	43	37	29	19	9	5	4	7	12	18	24	30	33	29	22	15	7	4	30.31	121041	121041
J5	20.1	2,620	WS Turf	High	Stream Spray/Rotors	5	8.13	6	9	16	24	32	39	43	37	28	19	9	5	4	7	12	18	24	30	33	29	22	14	7	4	30.31	84794	84794
J6	17.3	2,620	WS Turf	High	Stream Spray/Rotors	5	9.44	7	10	18	28	37	46	50	43	33	22	10	6	5	7	14	21	28	35	39	33	25	17	8	5	30.31	84794	84794
J7	7.3	985	Shrub/GC	Low	Bubblers/Drip	3	8.38	3	5	9	14	19	23	26	22	17	11	5	3	3	4	7	11	14	18	20	17	13	9	4	2	17.14	31879	31879
J8	5.0	50	Tree	Med	Bubblers/Drip	4	0.62	0	0	1	1	2	2	2	2	1	0	0		0	0	1	1	2	2	2	2	1	1	0	0	21.67	1618	1618
J9	3.0	30	Tree	Med	Bubblers/Drip	4	0.62	0	0	1	1	2	2	2	2	2	1	0	0	0	0	1	1	1	2	2	2	2	1	1	0	0	21.67	971	971
J10	19.6	2,620	WS Turf	High	Stream Spray/Rotors	5	8.33	6	9	16	25	32	40	44	38	29	19	9	5	4	7	12	19	25	31	34	29	22	15	7	4	30.31	84794	84794
J11	40.5	4,690	WS Turf	High	Stream Spray/Rotors	5	7.22	5	8	14	21	28	35	38	33	25	17	8	5	4	6	11	16	22	27	30	25	19	13	6	3	30.31	151787	151787
J12	28.6	3,740	WS Turf	High	Stream Spray/Rotors	5	8.15	6	9	16	24	32	39	43	37	29	19	9	5	4	7	12	18	24	30	33	29	22	15	7	4	30.31	121041	121041
J13	6.0	1,140	Shrub/GC	Low	Bubblers/Drip	3	11.79	5	7	13	20	26	33	36	31	24	16	7	4	4	6	10	15	20	25	28	24	18	12	6	3	17.14	36895	36895
J14	38.3	4,690	WS Turf	High	Stream Spray/Rotors	5	7.63	5	8	15	22	30	37	41	35	27	18	8	5	4	6	11	17	23	28	31	27	21	14	6	4	30.31	151787	151787
J15	48.0	4,690	WS Turf	High	Stream Spray/Rotors	5	6.09	4	6	12	18	24	29	32	28	21	14	6	4	3	5	9	14	18	23	25	21	16	11	5	3	30.31	151787	151787
J16	7.0	70	Tree	Med	Bubblers/Drip	4	0.62	0	0	1	1	2	2	2	2	1	0	0		0	0	1	1	2	2	2	2	1	1	0	0	21.67	2265	2265
J17	29.7	3,740	WS Turf	High	Stream Spray/Rotors	5	7.85	5	8	15	23	30	38	42	36	28	18	8	5	4	6	12	18	23	29	32	28	21	14	6	4	30.31	121041	121041
J18	10.4	1,720	Shrub/GC	Low	Bubblers/Drip	3	10.31	4	6	12	18	23	29	32	27	21	14	6	4	3	5	9	14	18	22	24	21	16	11	5	3	17.14	55666	55666
																													ESTIMATED PLANTED AREA AVERAGE PRECIPITATION IN INCHES/YEAR				24.98		
																													TOTAL # OF VALVES				18		
NON IRRIGATED LANDSCAPE AREA																																			
		0	Water Feature	High	Water Feature	5																											0	0
		0	Non Irrigated		Non Irrigated																												0	
																													TOTAL # OF VALVES				0		

IRRIGATED LA		
SHRUB	0	S.F.
ANNUALS	0	S.F.
TURF	0	S.F.
TREE	0	S.F.
TEMP	0	S.F.
HA	**0**	**S.F.**

IRRIGATED SPECIAL LA		
SHRUB	4,520	S.F.
TURF	33,150	S.F.
TREE	310	S.F.
EDIBLE	0	S.F.
ACTIVE	0	S.F.
SLA	**37,980**	**S.F.**

NON IRRIGATED		
WATER FEATURE	0	S.F.
NON IRRIGATED	0	S.F.
SLA	**0**	**S.F.**

TOTAL AREA	
37,980	S.F.

WATER DEMAND		
Maximum Flow Demand	30	Gpm/Day
Watering Window of	8	Hours
# of Watering Days/Wk - Turf	3	Days
# of Watering Days/Wk - Shrub	3	Days

SOILS	YEARLY ETO	
Texture	Clay and Clay Loam	Roseville 52.2

MAWA = (YEARLY ETO) (0.62) [(0.45 x LA) + (0.55 x SLA)] — **MAWA** 1,229,185

ETWU = (YEARLY ETO)(0.62)((HA x Ks/IE)+SLA) — **ETWU** 1,229,185

ETWU 1,229,185 > **MAWA** 1,229,185

NOTES:
1. Run Time in Minutes/Day shall occur on each Watering Day per Week. Run Time = Weekly ETO*60/(PR*IE)*Watering Days
2. Any irrigation valve w hose Precipitation Rate (PR) exceeds the Soil Infiltration Rate (SIR), shall be programmed using the Cycle and Soak feature. Run times in minutes per day shall be divided into the necessary amount of cycles to avoid runoff. Do not exceed Max Cycle Time. Maximum Run Time per Cycle show n becomes invalid if there is a slope involved. Visual analysis in the field w ill be needed to determine Cycle time.
3. Any landscaped area graded to a slope of 10:1 or greater shall be programed using the Cycle and Soak feature. Run times in minutes per day shall be divided in half for each cycle. Do not exceed Max Cycle Time.
4. Controllers need to be programmed using multiple program features in order to obtain the maximum flow demand. If necessary, program multiple valves to run simultaneously so that the Maximum Flow Demand is met.
5. Establishment period is 6 months.

ESTIMATED TOTAL WATER USE:
This estimate of water use is based on watering properly maintained, established plantings with a water use management plan in place. In providing this estimate of water use, it is recognized that Fuhrman Leamy Land Group does not have control over the maintenance of the landscaped areas or management of water use. This estimate of water use is based on AB1881 requirements and Fuhrman Leamy Land Group's reasonable professional judgement and experience and does not constitute a warranty, express or implied, that the actual water use will not vary from this estimate.

WATER EFFICIENT LANDSCAPE ORDINANCE

SUBMITTAL DOCUMENTATION COVERSHEET

FUHRMAN LEAMY LAND GROUP
DESIGN · SERVICE · SOLUTIONS

PROJECT: JM-52 PARK
JOB#: CRV:25027
DATE: 11.15.2025

APPLICANT

CONTACT NAME: ANGELA MILLER
TITLE: SENIOR PROJECT MANAGER
COMPANY NAME: FUHRMAN LEAMY LAND GROUP
STREET ADDRESS: 3400 DOUGLAS BLVD., SUITE 275
CITY, STATE, ZIP: ROSEVILLE, CA 95661
TELEPHONE #: 916.783.5263
FAX #: n/a
EMAIL ADDRESS: angelam@fllandgroup.com

PROPERTY OWNER AND/OR REPRESENTATIVE

CONTACT NAME: TARA GEE
TITLE: REPRESENTATIVE
COMPANY NAME: CITY OF ROSEVILLE PARKS DEPT.
STREET ADDRESS: 311 VERNON STREET
CITY, STATE, ZIP: ROSEVILLE, CA 95678
TELEPHONE #: 916.774.5253
FAX #: n/a
EMAIL ADDRESS: TGee@roseville.ca.us

PROJECT

STREET ADDRESS: BRIGHT STAR ROAD & MISTY RIDGE DRIVE
CITY, STATE, ZIP: ROSEVILLE, CA 95765
PARCEL, TRACT, OR LOT NUMBER: -
LATTITUDE/LONGITUDE (Optional): -

PROJECT TYPE: PARK
TOTAL LANDSCAPE AREA: 37,980 S.F.
WATER SUPPLY TYPE: RECYCLED

APPLICANT

"I agree to comply with the requirements of the water efficient landscape ordinance and submit a complete landscape documentation package."

Angela Miller — Applicant Signature
11.15.2025 — Date

MWELO CERTIFICATE OF COMPLETION

THE FOLLOWING LANDSCAPE DOCUMENTATION IS TO BE SUBMITTED TO THE BUILDING INSPECTOR AT TIME OF FINAL INSPECTION:

CERTIFICATE OF COMPLETION:	COMPLETED BY PROPERTY OWNER
CERTIFICATE OF INSTALLATION:	COMPLETED BY LANDSCAPE ARCHITECT OR LICENSED LANDSCAPE CONTRACTOR
SCHEDULE OF LANDSCAPE MAINTANENCE:	SEE IRRIGATION PLANS FOR LANDSCAPE MAINTENANCE SCHEDULES
SOIL MANAGEMENT REPORT:	CONTRACTOR TO PROVIDE SOILS FERTILITY REPORT.
LANDSCAPE AUDIT REPORTS:	PREPARED BY A CERTIFIED LANDSCAPE IRRIGATION AUDITOR

FOR COUNCIL ONLY - NOT FOR CONSTRUCTION

FUHRMAN LEAMY LAND GROUP
DESIGN · SERVICE · SOLUTIONS
3400 DOUGLAS BLVD, SUITE 275
ROSEVILLE, CALIFORNIA 95661
916.783.5263 • FLLANDGROUP.COM

JOB NO. : CRV: 25027

CITY OF ROSEVILLE APPROVAL

PROJECT:
JM-52 PARK

5097 MISTY RIDGE DRIVE
ROSEVILLE, CA

CLIENT:
CITY OF ROSEVILLE

REVISIONS — DATE
1.
2.
3.
4.

ISSUE		DATE
1	1ST SUBMITTAL	9.05.2025
2	2ND SUBMITTAL	10.08.2025
3	3RD SUBMITTAL	11.21.2025
4	4TH SUBMITTAL	1.28.2026
5		

REGISTERED LANDSCAPE ARCHITECT
KEVIN C. LEAMY
No. 4965
12/31/26
Renewal Date
1.15.2026
Date
STATE OF CALIFORNIA

DRAWN : AM
CHECKED : KCL
SCALE: : AS SHOWN

SHEET TITLE:
MWELO DOCUMENTATION

SHEET
LI-2.1
20 OF 30 SHEETS

FURHMAN LEAMY LAND GROUP HEREBY EXPRESSLY RESERVES ITS COMMON LAW COPYRIGHT AND OTHER PROPERTY RIGHTS IN THESE PLANS. THESE PLANS AND DRAWINGS ARE NOT TO BE REPRODUCED, CHANGED OR COPIED IN ANY FORM OR MANNER WHATSOEVER WITHOUT FIRST OBTAINING THE EXPRESS WRITTEN PERMISSION OF FUHRMAN LEAMY LAND GROUP NOR ARE THEY TO BE ASSIGNED TO ANY THIRD PARTY WITHOUT FIRST OBTAINING WRITTEN PERMISSION AND CONSENT

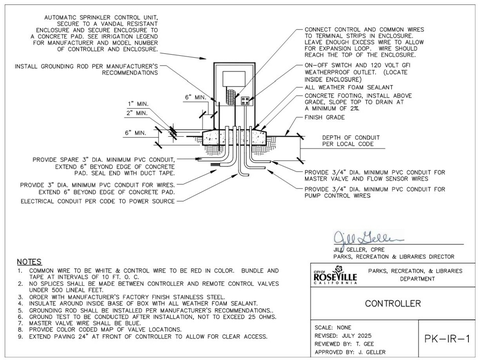

NOTES
1. COMMON WIRE TO BE WHITE & CONTROL WIRE TO BE RED IN COLOR. BUNDLE AND TAPE AT INTERVALS OF 10 FT. O. C.
2. NO SPLICES SHALL BE MADE BETWEEN CONTROLLER AND REMOTE CONTROL VALVES UNLESS SHOWN ON PLANS.
3. UNDER WITH MANUFACTURER'S FACTORY FINISH, STAINLESS STEEL.
4. INSULATE AROUND INSIDE BASE OF BOX WITH ALL WEATHER FOAM SEALANT.
5. GROUNDING ROD SHALL BE INSTALLED PER MANUFACTURER'S RECOMMENDATIONS..
6. GROUND TEST TO BE CONDUCTED AFTER INSTALLATION, NOT TO EXCEED 25 OHMS.
7. MASTER VALVE WIRE SHALL BE BLUE.
8. PROVIDE COLOR CODED MAP OF VALVE LOCATIONS.
9. EXTEND PAVING 24" AT FRONT OF CONTROLLER TO ALLOW FOR CLEAR ACCESS.

Jeff Geller, CPRE
PARKS, RECREATION & LIBRARIES DIRECTOR

CITY OF ROSEVILLE CALIFORNIA — PARKS, RECREATION, & LIBRARIES DEPARTMENT

CONTROLLER

SCALE: NONE
REVISED: JULY 2025
REVIEWED BY: T. GEE
APPROVED BY: J. GELLER

PK–IR–1

A CONTROLLER
NOT TO SCALE — PR-25027-01

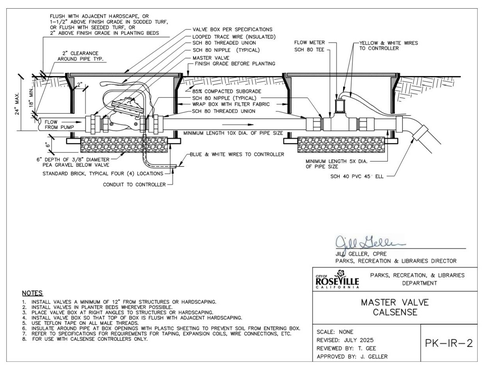

NOTES
1. INSTALL VALVES A MINIMUM OF 12" FROM STRUCTURES OR HARDSCAPING.
2. INSTALL VALVES IN PLANTER BEDS WHEREVER POSSIBLE.
3. PLACE VALVE BOX AT RIGHT ANGLES TO STRUCTURES OR HARDSCAPING.
4. INSTALL VALVE BOX SO THAT TOP OF BOX IS FLUSH WITH ADJACENT HARDSCAPING.
5. USE TEFLON TAPE ON ALL MALE THREADS.
6. ISOLATE AROUND PIPE AT BOX OPENINGS WITH PLASTIC SHEETING TO PREVENT SOIL FROM ENTERING BOX.
7. REFER TO SPECIFICATIONS FOR REQUIREMENTS FOR TAPING, EXPANSION COILS, WIRE CONNECTIONS, ETC.
8. FOR USE WITH CALSENSE CONTROLLERS ONLY.

Jeff Geller, CPRE
PARKS, RECREATION & LIBRARIES DIRECTOR

CITY OF ROSEVILLE CALIFORNIA — PARKS, RECREATION, & LIBRARIES DEPARTMENT

MASTER VALVE CALSENSE

SCALE: NONE
REVISED: JULY 2025
REVIEWED BY: T. GEE
APPROVED BY: J. GELLER

PK–IR–2

B MASTER VALVE - CALSENSE
NOT TO SCALE — PR-25027-02

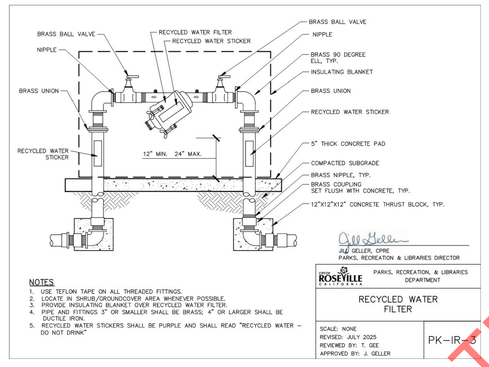

NOTES
1. USE TEFLON TAPE ON ALL THREADED FITTINGS.
2. LOCATE IN SHRUB/GROUNDCOVER AREA WHENEVER POSSIBLE.
3. PROVIDE INSULATING BLANKET OVER RECYCLED WATER FILTER.
4. PIPE AND FITTINGS 3" OR SMALLER SHALL BE BRASS; 4" OR LARGER SHALL BE DUCTILE IRON.
5. RECYCLED WATER STICKERS SHALL BE PURPLE AND SHALL READ "RECYCLED WATER – DO NOT DRINK"

Jeff Geller, CPRE
PARKS, RECREATION & LIBRARIES DIRECTOR

CITY OF ROSEVILLE CALIFORNIA — PARKS, RECREATION, & LIBRARIES DEPARTMENT

RECYCLED WATER FILTER

SCALE: NONE
REVISED: JULY 2025
REVIEWED BY: T. GEE
APPROVED BY: J. GELLER

PK–IR–3

C RECYCLED WATER FILTER
NOT TO SCALE — PR-25027-04

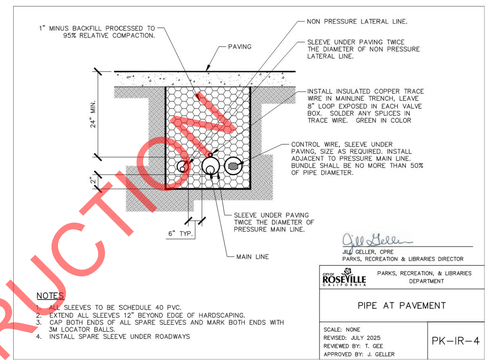

NOTES
1. ALL SLEEVES TO BE SCHEDULE 40 PVC.
2. EXTEND ALL SLEEVES 12" BEYOND EDGE OF HARDSCAPING.
3. CAP BOTH ENDS OF ALL SPARE SLEEVES AND MARK BOTH ENDS WITH 3M LOCATOR BALLS.
4. INSTALL SPARE SLEEVE UNDER ROADWAYS

Jeff Geller, CPRE
PARKS, RECREATION & LIBRARIES DIRECTOR

CITY OF ROSEVILLE CALIFORNIA — PARKS, RECREATION, & LIBRARIES DEPARTMENT

PIPE AT PAVEMENT

SCALE: NONE
REVISED: JULY 2025
REVIEWED BY: T. GEE
APPROVED BY: J. GELLER

PK–IR–4

D PIPE AT PAVEMENT
NOT TO SCALE — PR-25027-05

NOTES
1. RECLAIMED WATER REQUIRES BURIED TAPE LINE PER PUBLIC WORKS CONSTRUCTION STANDARDS.

Jeff Geller, CPRE
PARKS, RECREATION & LIBRARIES DIRECTOR

CITY OF ROSEVILLE CALIFORNIA — PARKS, RECREATION, & LIBRARIES DEPARTMENT

PIPE TRENCH

SCALE: NONE
REVISED: JULY 2025
REVIEWED BY: T. GEE
APPROVED BY: J. GELLER

PK–IR–5

E PIPE TRENCH
NOT TO SCALE — PR-25027-06

NOTES
1. COMPACT SOIL AROUND BOX TO 90% MINIMUM COMPACTION.
2. PLACE DRAIN ROCK PRIOR TO INSTALLING VALVE BOX.
3. GATE VALVE AND FITTINGS SHALL BE LINE SIZE UNLESS OTHERWISE NOTED.
4. USE TEFLON TAPE ON ALL THREADED FITTINGS.
5. LOCATE VALVES IN SHRUB/GROUNDCOVER AREAS WHENEVER POSSIBLE.
6. LOOP EXTRA TRACER WIRE UP TO TOP OF BOX.

Jeff Geller, CPRE
PARKS, RECREATION & LIBRARIES DIRECTOR

CITY OF ROSEVILLE CALIFORNIA — PARKS, RECREATION, & LIBRARIES DEPARTMENT

VALVE 3 INCH AND SMALLER

SCALE: NONE
REVISED: JULY 2025
REVIEWED BY: T. GEE
APPROVED BY: J. GELLER

PK–IR–10

F GATE VALVE (3" & SMALLER)
NOT TO SCALE — PR-25027-11

NOTES
1. INSTALL VALVE BOXES SO THAT THE TOP OF THE BOX IS FLUSH WITH THE TOP OF THE ADJACENT HARDSCAPE.
2. USE TEFLON TAPE ON ALL THREADED CONNECTIONS.

Jeff Geller, CPRE
PARKS, RECREATION & LIBRARIES DIRECTOR

CITY OF ROSEVILLE CALIFORNIA — PARKS, RECREATION, & LIBRARIES DEPARTMENT

VALVE QUICK COUPLING

SCALE: NONE
REVISED: JULY 2025
REVIEWED BY: T. GEE
APPROVED BY: J. GELLER

PK–IR–13

G VALVE - QUICK COUPLING
NOT TO SCALE — PR-25027-14

NOTES
1. INSTALL VALVES A MINIMUM OF 12" FROM STRUCTURES OR HARDSCAPING.
2. INSTALL VALVES IN PLANTER BEDS WHEREVER POSSIBLE.
3. PLACE VALVE BOX AT RIGHT ANGLES TO STRUCTURES OR HARDSCAPING.
4. INSTALL VALVE BOX SO THAT TOP OF BOX IS FLUSH WITH ADJACENT HARDSCAPING.
5. USE TEFLON TAPE ON ALL MALE THREADS.
6. VALVES ON MAINLINES 3" AND LARGER REQUIRE SADDLE TAPS, 2 1/2" AND SMALLER MAINLINE REQUIRES GLUED SCHEDULE 80 FITTINGS.
7. PROVIDE SCHEDULE 80 THREADED UNION ON BOTH UPSTREAM AND DOWNSTREAM SIDES.
8. INSULATE AROUND PIPE AT BOX OPENINGS WITH PLASTIC SHEETING TO PREVENT SOIL FROM ENTERING BOX.
9. REFER TO SPECIFICATIONS FOR REQUIREMENTS FOR TAPING, EXPANSION COILS, WIRE CONNECTIONS, ETC.
10. ALL RCV'S SHALL BE TAGGED INDICATING STATION #'S.
11. ALL VALVE BOXES SHALL HAVE STATION #'S PERMANENTLY BURNED ON VALVE BOX LIDS. MARKINGS SHALL BE AS FOLLOWS:
TURF VALVES: 1#
LANDSCAPE AREA VALVES: 1#
BUBBLER VALVES: 1#
12. REFER TO PK-51 FOR INFIELD VALVES DETAILS AND INFIELD VALVE BOX LAYOUT

Jeff Geller, CPRE
PARKS, RECREATION & LIBRARIES DIRECTOR

CITY OF ROSEVILLE CALIFORNIA — PARKS, RECREATION, & LIBRARIES DEPARTMENT

VALVE REMOTE CONTROL AT GRADE

SCALE: NONE
REVISED: JULY 2025
REVIEWED BY: T. GEE
APPROVED BY: J. GELLER

PK–IR–14

H VALVE - REMOTE CONTROL AT GRADE
NOT TO SCALE — PR-25027-15

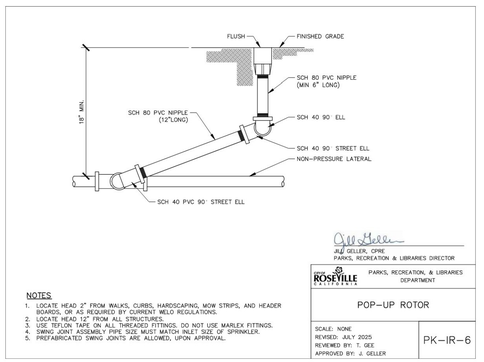

NOTES
1. LOCATE HEAD 2" FROM WALKS, CURBS, HARDSCAPING, MOW STRIPS, AND HEADER BOARDS, OR AS REQUIRED BY CURRENT WELO REGULATIONS.
2. LOCATE HEAD 12" FROM ALL STRUCTURES.
3. USE TEFLON TAPE ON ALL THREADED FITTINGS. DO NOT USE MARLEX FITTINGS.
4. SWING JOINT ASSEMBLY PIPE SIZE MUST MATCH INLET SIZE OF SPRINKLER.
5. PREFABRICATED SWING JOINTS ARE ALLOWED, UPON APPROVAL.

Jeff Geller, CPRE
PARKS, RECREATION & LIBRARIES DIRECTOR

CITY OF ROSEVILLE CALIFORNIA — PARKS, RECREATION, & LIBRARIES DEPARTMENT

POP-UP ROTOR

SCALE: NONE
REVISED: JULY 2025
REVIEWED BY: T. GEE
APPROVED BY: J. GELLER

PK–IR–6

I POP-UP ROTOR
NOT TO SCALE — PR-25027-07

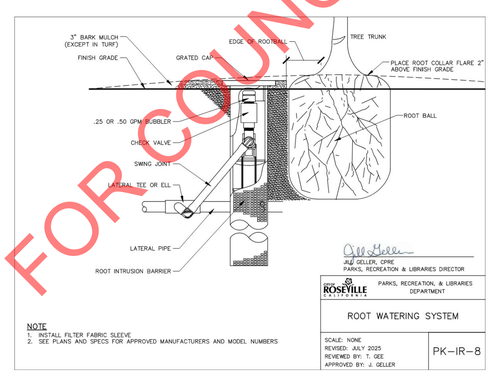

NOTE
1. INSTALL FILTER FABRIC SLEEVE.
2. SEE PLANS AND SPECS FOR APPROVED MANUFACTURERS AND MODEL NUMBERS

Jeff Geller, CPRE
PARKS, RECREATION & LIBRARIES DIRECTOR

CITY OF ROSEVILLE CALIFORNIA — PARKS, RECREATION, & LIBRARIES DEPARTMENT

ROOT WATERING SYSTEM

SCALE: NONE
REVISED: JULY 2025
REVIEWED BY: T. GEE
APPROVED BY: J. GELLER

PK–IR–8

J ROOT WATERING SYSTEM
NOT TO SCALE — PR-25027-09

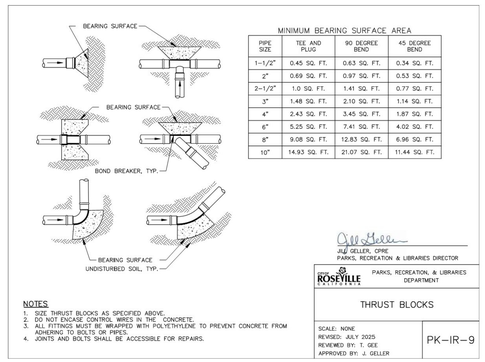

MINIMUM BEARING SURFACE AREA

PIPE SIZE	TEE AND PLUG	90 DEGREE BEND	45 DEGREE BEND
1–1/2"	0.45 SQ. FT.	0.63 SQ. FT.	0.34 SQ. FT.
2"	0.69 SQ. FT.	0.97 SQ. FT.	0.53 SQ. FT.
2–1/2"	1.0 SQ. FT.	1.41 SQ. FT.	0.77 SQ. FT.
3"	1.48 SQ. FT.	2.10 SQ. FT.	1.14 SQ. FT.
4"	2.43 SQ. FT.	3.45 SQ. FT.	1.87 SQ. FT.
6"	5.25 SQ. FT.	7.41 SQ. FT.	4.02 SQ. FT.
8"	9.08 SQ. FT.	12.83 SQ. FT.	6.96 SQ. FT.
10"	14.93 SQ. FT.	21.07 SQ. FT.	11.44 SQ. FT.

NOTES
1. SIZE THRUST BLOCKS AS SPECIFIED ABOVE.
2. DO NOT ENCASE CONTROL WIRES IN THE CONCRETE.
3. ALL FITTINGS MUST BE WRAPPED WITH POLYETHYLENE TO PREVENT CONCRETE FROM ADHERING TO BOLTS OR PIPES.
4. JOINTS AND BOLTS SHALL BE ACCESSIBLE FOR REPAIRS.

Jeff Geller, CPRE
PARKS, RECREATION & LIBRARIES DIRECTOR

CITY OF ROSEVILLE CALIFORNIA — PARKS, RECREATION, & LIBRARIES DEPARTMENT

THRUST BLOCKS

SCALE: NONE
REVISED: JULY 2025
REVIEWED BY: T. GEE
APPROVED BY: J. GELLER

PK–IR–9

K THRUST BLOCKS
NOT TO SCALE — PR-25027-10

FOR COUNCIL ONLY - NOT FOR CONSTRUCTION

FUHRMAN LEAMY
LAND GROUP
DESIGN • SERVICE • SOLUTIONS
3400 DOUGLAS BLVD, SUITE 275
ROSEVILLE, CALIFORNIA 95661
916.783.5263 • FLLANDGROUP.COM

JOB NO. : CRV- 25027

CITY OF ROSEVILLE APPROVAL

PROJECT:
JM-52 PARK
5097 MISTY RIDGE DRIVE
ROSEVILLE, CA

CLIENT:
CITY OF ROSEVILLE

REVISIONS — DATE

ISSUE — DATE
1. 1ST SUBMITTAL 9.05.2025
2. 2ND SUBMITTAL 10.08.2025
3. 3RD SUBMITTAL 11.21.2025
4. 4TH SUBMITTAL 1.28.2026
5.

REGISTERED LANDSCAPE ARCHITECT — KEVIN C. LEAMY — No. 4965 — 12/31/26 Renewal Date — 1.15.2026 Date — STATE OF CALIFORNIA

DRAWN : AM
CHECKED : KCL
SCALE. : AS SHOWN

SHEET TITLE:
LANDSCAPE IRRIGATION DETAILS

SHEET
LI-2.2
21 OF 30 SHEETS

FUHRMAN LEAMY LAND GROUP HEREBY EXPRESSLY RESERVES ITS COMMON LAW COPYRIGHT AND OTHER PROPERTY RIGHTS IN THESE PLANS. THESE PLANS AND DRAWINGS ARE NOT TO BE REPRODUCED, CHANGED OR COPIED IN ANY FORM OR MANNER WHATSOEVER WITHOUT FIRST OBTAINING THE EXPRESS WRITTEN PERMISSION OF FUHRMAN LEAMY LAND GROUP NOR ARE THEY TO BE ASSIGNED TO ANY THIRD PARTY WITHOUT FIRST OBTAINING WRITTEN PERMISSION AND CONSENT

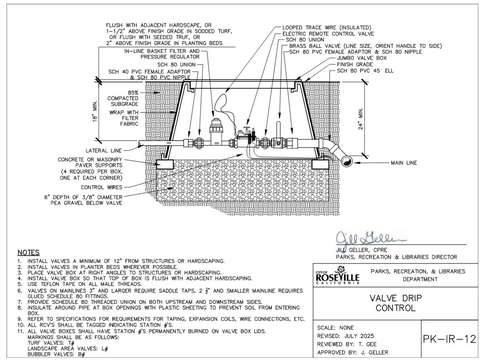

NOTES
1. INSTALL VALVES A MINIMUM OF 12" FROM STRUCTURES OR HARDSCAPING.
2. INSTALL VALVES IN PLANTER BEDS WHEREVER POSSIBLE.
3. INSTALL VALVES A MINIMUM OF 6" FROM EDGE OF HARDSCAPING.
4. INSTALL VALVE BOX SO THAT TOP OF BOX IS FLUSH WITH ADJACENT HARDSCAPING.
5. USE TEFLON TAPE ON ALL MALE THREADS.
6. VALVES ON MAINLINES 3" AND LARGER REQUIRE SADDLE TAPS, 2 1/2" AND SMALLER MAINLINE REQUIRES GLUED SCHEDULE 80 FITTINGS.
7. PROVIDE SCHEDULE 80 THREADED UNION ON BOTH UPSTREAM AND DOWNSTREAM SIDES.
8. INSULATE AROUND PIPE AT BOX OPENINGS WITH PLASTIC SHEETING TO PREVENT SOIL FROM ENTERING BOX.
9. REFER TO SPECIFICATIONS FOR REQUIREMENTS FOR TAPING, EXPANSION COILS, WIRE CONNECTIONS, ETC.
10. ALL RCV'S SHALL BE TAGGED INDICATING STATION #'S.
11. ALL VALVE BOXES SHALL HAVE STATION #'S PERMANENTLY BURNED ON VALVE BOX LIDS.

MARKINGS SHALL BE AS FOLLOWS:
TURF VALVES: T
LANDSCAPE AREA VALVES: L
BUBBLER VALVES: B

JILL GELLER, CPRE
PARKS, RECREATION & LIBRARIES DIRECTOR

ROSEVILLE — PARKS, RECREATION, & LIBRARIES DEPARTMENT

VALVE DRIP CONTROL

SCALE: NONE
REVISED: JULY 2025
REVIEWED BY: T. GEE
APPROVED BY: J. GELLER

PK–IR–12

A VALVE - DRIP CONTROL
NOT TO SCALE — PR-25027-13

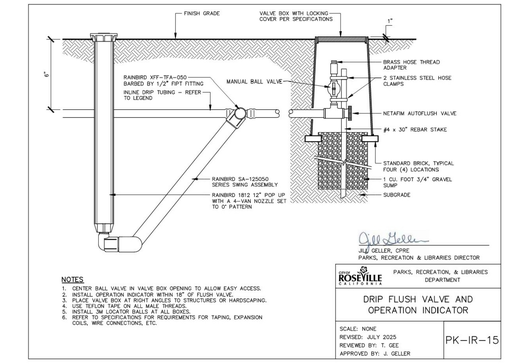

NOTES
1. CENTER BALL VALVE IN VALVE BOX OPENING TO ALLOW EASY ACCESS.
2. INSTALL OPERATION INDICATOR WITHIN 18" OF FLUSH VALVE.
3. PLACE VALVE BOX AT RIGHT ANGLES TO STRUCTURES OR HARDSCAPING.
4. INSTALL 3M LOCATOR BALLS AT TURNS.
5. INSTALL 3M LOCATOR BALLS AT 100' INTERVALS.
6. REFER TO SPECIFICATIONS FOR REQUIREMENTS FOR TAPING, EXPANSION COILS, WIRE CONNECTIONS, ETC.

JILL GELLER, CPRE
PARKS, RECREATION & LIBRARIES DIRECTOR

ROSEVILLE — PARKS, RECREATION, & LIBRARIES DEPARTMENT

DRIP FLUSH VALVE AND OPERATION INDICATOR

SCALE: NONE
REVISED: JULY 2025
REVIEWED BY: T. GEE
APPROVED BY: J. GELLER

PK–IR–15

B DRIP FLUSH VALVE & OPERATION INDICATOR
1" = 1" — PR-25027-16

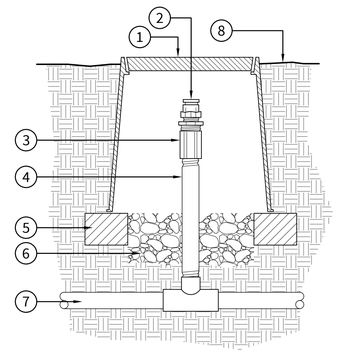

1. 6" ROUND VALVE BOX.
2. AIR/VACUUM RELIEF VALVE.
3. 1/2" PVC COUPLING: T x T.
4. 1/2" SCH 80 RISER. LENGTH AS REQUIRED.
5. STANDARD BRICK SUPPORTS. THREE EACH BOX.
6. 3/4" CRUSHED GRAVEL SUMP.
7. PVC PIPING AND FITTINGS.
8. FINISH GRADE.

C AIR/VACUUM RELIEF VALVE (PLUMBED TO PVC)
NOT TO SCALE — PR-25027-35

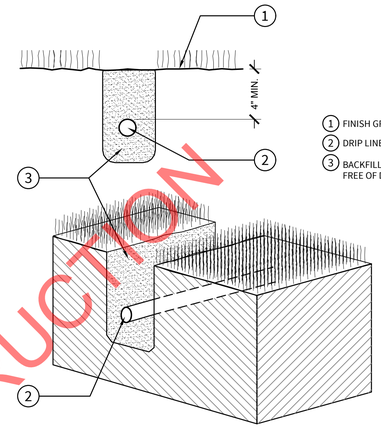

1. FINISH GRADE.
2. DRIP LINE TUBING.
3. BACKFILLED TRENCH FREE OF DEBRIS.

D DRIP LINE TRENCHING
NOT TO SCALE — PR-25027-31

1. DRIP LINE: 180 2-WAY TEE (CENTER FEED LAYOUT). 90 TEE (END FEED).
2. DRIP LINE TUBING. SEE LEGEND.
3. 3/4" SCH. 80 PVC NIPPLE.
4. PVC TEE: S x S x T.
5. FINISH GRADE.

E DRIP LINE START CONNECTION W/PVC RISER
NOT TO SCALE — PR-25027-36

DRIPLINE MAXIMUM LENGTH OF SINGLE LATERAL (FEET)

EMITTER SPACING	12"		18"		24"	
EMITTER FLOW RATE (GPH)	0.40	0.6	0.6	0.90	0.6	0.9
5	121	109	181	177	121	181
10	422	325	378	344	242	363
15	724	474	511	344	363	574
20	845	643	644	509	363	574
25	966	812	777	674	363	574
30	1087	981	910	839	363	574
35	1208	1150	1043	1004	363	574
40	1329	1319	1176	1169	363	574
45	1450	1488	1309	1334	363	574
50	1571	1657	1442	1499	363	574

DRIPLINE FLOW PER 100 FEET

EMITTER FLOW GPH / EMITTER SPACING	0.4 GPH 24INFDD	0.6 GPH 24INFDD	0.9 GPH 24INFDD
	GPH	GPM	GPH	GPM	GPH	GPM
12"	26.40	0.44	40.00	0.67	61.60	1.03
18"	17.60	0.29	26.67	0.44	41.07	1.03
24"	N/A	N/A	N/A	N/A	30.80	0.51
					46.00	0.77

DRIPLINE GENERAL GUIDELINES FOR WATERING TIME

	TURF		SHRUB IN GROUND COVER		
	CLAY	LOAM	SAND	CLAY	LOAM	SAND
DRIPPER FLOW (GPH)	0.26	0.4	0.6	0.26	0.4	0.6
DRIPPER INTERVAL	12"	12"	12"	18"	18"	12"
LATERAL SPACING	18"-22"	18"-22"	12"-14"	18"-24"	18"-24"	18"-22"
APPLICATION RATE (IN/HR)	0.6-0.55	0.6-.55	0.6-.51	.51-.25	.51-.25	.51-.38
TIME TO APPLY 1/4"	7hr-16hr	55-45	44-.23	7hr-15?	51-7h	21-26

SUPPLY AND EXHAUST HEADER SIZING CHART

USE 1"	MAX LENGTH OF ALL REGULAR LATERAL TUBING CONNECTED TO THE HEADER	0 TO 10 GPM	11 TO 20 GPM	21 TO 30 GPM	31 TO 40 GPM
USE 1 1/4"	LOCATE THE GPM THAT APPLIES FOR EACH ONE" OF ODD DIST LENGTH IN THE	1" HEADER	1 1/4" HEADER	1 1/2" HEADER	
USE 1 1/2"	THE SUM OF THE ODD FOR THE TOTAL GPM AT THAT HEADER	1" TO 3 GPM	1 1/4" HEADER	1 1/2" HEADER	
	1" TO 3 GPM	1 1/4" HEADER	0 TO 15 GPM	1" HEADER	
	10 TO 20 GPM	1 1/4" HEADER	20 TO 30 GPM	1 1/2" HEADER	

NOTES
1. USE SUPPLY AND EXHAUST HEADER SIZING CHART UNLESS NOTED ON PLANS.
2. REFER TO PLANS FOR LOCATION OF SUPPLY AND EXHAUST AREA PER SPECIFIC ZONE AND TYPE OF PLANTING.
3. AIR RELIEF VALVES TO BE LOCATED AT THE HIGHEST ELEVATION OF EACH ZONE.
4. DRIP HEADER AND FLUSH VALVE TO BE LOCATED AT THE LOWEST ELEVATION OF EACH ZONE AND SHALL BE INSTALLED PER PARKS STANDARD AND SPECIFICATIONS.

JILL GELLER, CPRE
PARKS, RECREATION & LIBRARIES DIRECTOR

ROSEVILLE — PARKS, RECREATION, & LIBRARIES DEPARTMENT

TYPICAL DRIPLINE DRIPGRID REQUIREMENTS

SCALE: NONE
REVISED: JULY 2025
REVIEWED BY: T. GEE
APPROVED BY: J. GELLER

PK–IR–16

F TYPICAL DRIPLINE DRIPGRID REQUIREMENTS
NOT TO SCALE — PR-25027-57

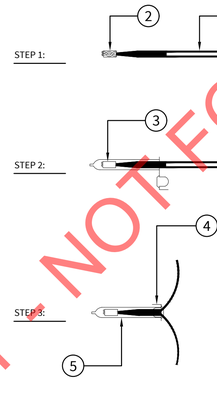

1. STRIP WIRES APPROX. 3/8" FROM ENDS - TWIST TOGETHER.
2. APPLY THE SCOTCHLOK ELECTRICAL CONNECTOR AND TWIST IN A CLOCKWISE DIRECTION.
3. INSERT THE SPLICE INTO THE GEL-FILLED INSULATOR TUBE. PUSH PAST THE LOCKING FINGERS TO HOLD THE SCOTCHLOK CONNECTOR IN PLACE.
4. POSITION WIRE CHANNELS AND SNAP INSULATOR TUBE COVER CLOSED.
5. 3M "DBY" WIRE CONNECTOR OR APPROVED EQUAL.

G WIRE CONNECTION - 3M DBY
NOT TO SCALE — PR-25027-42

1. 10" ROUND VALVE BOX. HEAT BRAND "QCV" ON LID IN 2" HIGH CHARACTERS.
2. RECTANGULAR VALVE BOX W/BOLT DOWN COVER. HEAT BRAND VALVE STATION NO. ON LID IN 2" HIGH CHARACTERS.
3. EDGE OF LAWN, WALK, FENCE, CURB, ETC.

NOTES:
1. CENTER BOXES OVER VALVES.
2. PLACE BOXES IN GROUNDCOVER AREA WHERE POSSIBLE. TYPICAL.
3. PLACE BOXES PARALLEL TO EACH OTHER AND PERPENDICULAR TO EDGE OF HARDSCAPE.
4. VALVE BOX SHALL BE PURPLE FOR RECYCLE (PANTONE 512) FOR RECLAIMED WATER.

H VALVE BOX LAYOUT (RECYCLED)
NOT TO SCALE — PR-25027-41

FOR COUNCIL ONLY - NOT FOR CONSTRUCTION

FUHRMAN LEAMY
LAND GROUP
DESIGN • SERVICE • SOLUTIONS

3400 DOUGLAS BLVD, SUITE 275
ROSEVILLE, CALIFORNIA 95661
916.783.5263 • FLLANDGROUP.COM

JOB NO. : CRV- 25027

CITY OF ROSEVILLE APPROVAL

PROJECT:

JM-52 PARK

5097 MISTY RIDGE DRIVE
ROSEVILLE, CA

CLIENT:
CITY OF ROSEVILLE

REVISIONS	DATE
△	
△	
△	
△	

ISSUE		DATE
1	1ST SUBMITTAL	9.05.2025
2	2ND SUBMITTAL	10.08.2025
3	3RD SUBMITTAL	11.21.2025
4	4TH SUBMITTAL	1.28.2026
5		

REGISTERED LANDSCAPE ARCHITECT
KEVIN C. LEAMY
No. 4965
12/31/26
Renewal Date
1.15.2026
Date
STATE OF CALIFORNIA

DRAWN : AM
CHECKED : KCL
SCALE: : AS SHOWN

SHEET TITLE:

LANDSCAPE IRRGATION DETAILS

SHEET

LI-2.3

22 OF 30 SHEETS

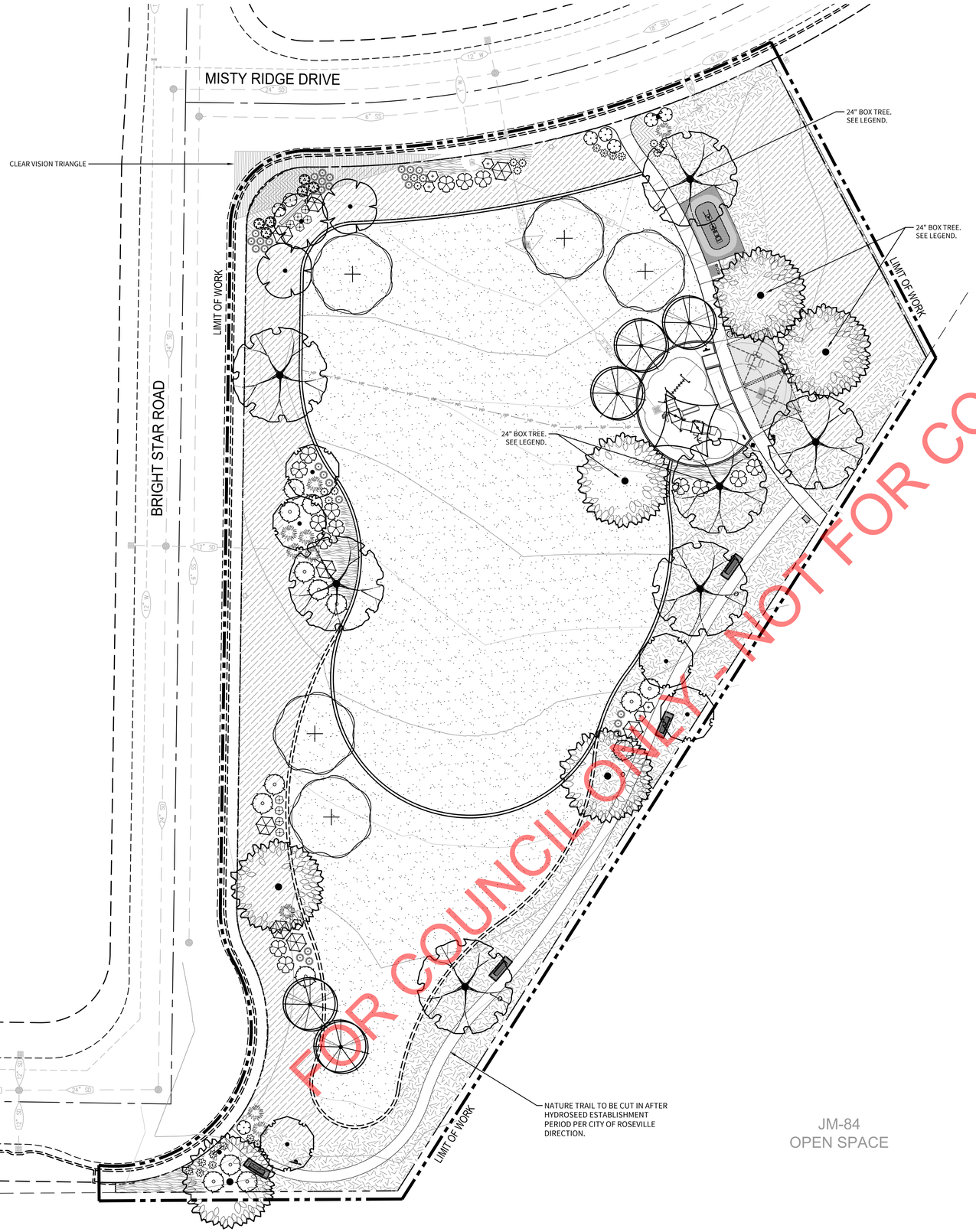

FOR COUNCIL ONLY - NOT FOR CONSTRUCTION

JM-84
OPEN SPACE

PLANT LIST & SCHEDULE

SYMBOL	BOTANICAL / COMMON NAME	SIZE	WATER USE	REMARKS	QTY
TREES					
	ACER CIRCINATUM VINE MAPLE	15 GAL.	MODERATE	STD. NATIVE	5
	ACER RUBRUM `OCTOBER GLORY` OCTOBER GLORY RED MAPLE (40'X35')	15 GAL.	MODERATE	STD.	5
	CHIONANTHUS RETUSUS CHINESE FRINGE TREE (20'X15')	15 GAL.	MODERATE	STD.	3
	NYSSA SYLVATICA TUPELO (40'X20')	15 GAL.	MODERATE	STD.	5
	QUERCUS AGRIFOLIA COAST LIVE OAK (60'X40')	15 GAL. 24" BOX	VERY LOW	STD. NATIVE	5 2
	QUERCUS LOBATA VALLEY OAK (60'X40')	15 GAL. 24" BOX	LOW	STD. NATIVE	3 3
SHRUBS					
	ACACIA REDOLENS 'LOW BOY' LOW BOY BANK CATCLAW	5 GAL.	LOW	--	15
	CISTUS X SKANBERGII CORAL ROCKROSE	5 GAL.	LOW	--	15
	ELYMUS CONDENSATUS `CANYON PRINCE` CANYON PRINCE WILD RYE	1 GAL.	LOW	--	27
	EPILOBIUM CANUM CALIFORNIA FUCHSIA	5 GAL.	LOW	--	12
	LANTANA MONTEVIDENSIS PURPLE TRAILING LANTANA	1 GAL.	LOW	--	8
	LOMANDRA LONGIFOLIA PLATINUM BEAUTY PLATINUM BEAUTY LOMANDRA	1 GAL.	LOW	--	12
	MUHLENBERGIA CAPILLARIS PINK MUHLY GRASS	5 GAL.	LOW	--	9
	PHLOMIS FRUTICOSA JERUSALEM SAGE	1 GAL.	LOW	--	6
	ROSA X FLOWER CARPET WHITE FLOWER CARPET ROSE	2 GAL.	MOD	--	6
	SALVIA LEUCOPHYLLA 'POINT SAL' POINT SAL PURPLE SAGE	1 GAL.	VERY LOW	--	8
	SALVIA MICROPHYLLA `HOT LIPS` HOT LIPS SAGE	1 GAL.	LOW	--	9

SYMBOL	BOTANICAL / COMMON NAME	SIZE	WATER USE	SPACING	QTY
GROUND COVERS					
	MYOPORUM PARVIFOLIUM 'WHITE' CREEPING MYOPORUM	1 GAL.	LOW	72" o.c.	23
	HYDROSEED: NON-IRRIGATED NATIVE LANDMARK MIX 36LBS./AC.	HYDROSEED	NON IRRIGATED	--	12,287 SF
	TEUCRIUM CHAMAEDRYS 'PROSTRATUM' PROSTRATE GERMANDER	1 GAL.	LOW	36" o.c.	33
	TURF SOD 90/10 TALL FESCUE FESCUE BLEND NOTE: BASE BID IS TURF SEED. (ADD ALTERNATE #1 - SEE SCOPE OF WORK PLAN)	SEED	HIGH	--	33,162 SF
	BARK ONLY - 3" LAYER (ADD ALTERNATE #4 - SEE SCOPE OF WORK PLAN)	--	--	--	9,714 SF

WATER EFFICIENT LANDSCAPE ORDINANCE:
"I have complied with the criteria of the Water Efficient Landscape Ordinance and applied such criteria for the efficient use of water in the landscape design plan."

Applicant Signature | 4965 License # | 8.6.2025 Date

SCALE: 1" = 20'-0"
0' 20' 80'
10' 40'

FUHRMAN LEAMY
LAND GROUP
DESIGN • SERVICE • SOLUTIONS
3400 DOUGLAS BLVD, SUITE 275
ROSEVILLE, CALIFORNIA 95661
916.783.5263 • FLLANDGROUP.COM

JOB NO. : CRV: 25027

CITY OF ROSEVILLE APPROVAL

PROJECT:
JM-52 PARK

5097 MISTY RIDGE DRIVE
ROSEVILLE, CA

CLIENT:
CITY OF ROSEVILLE

REVISIONS	DATE
1	
2	
3	
4	

ISSUE		DATE
1	1ST SUBMITTAL	9.05.2025
2	2ND SUBMITTAL	10.08.2025
3	3RD SUBMITTAL	11.21.2025
4	4TH SUBMITTAL	1.28.2026
5		

REGISTERED LANDSCAPE ARCHITECT
KEVIN C. LEAMY
No. 4965
12/31/26 Renewal Date
1.15.2026 Date
STATE OF CALIFORNIA

DRAWN : AM
CHECKED : KCL
SCALE: : 1"=20'-0"

SHEET TITLE:
LANDSCAPE PLANTING PLAN & LEGEND

SHEET
LP-1.0
23 OF 30 SHEETS

FUHRMAN LEAMY LAND GROUP HEREBY EXPRESSLY RESERVES ITS COMMON LAW COPYRIGHT AND OTHER PROPERTY RIGHTS IN THESE PLANS. THESE PLANS AND DRAWINGS ARE NOT TO BE REPRODUCED, CHANGED OR COPIED IN ANY FORM OR MANNER WHATSOEVER WITHOUT FIRST OBTAINING THE EXPRESS WRITTEN PERMISSION OF FUHRMAN LEAMY LAND GROUP NOR ARE THEY TO BE ASSIGNED TO ANY THIRD PARTY WITHOUT FIRST OBTAINING WRITTEN PERMISSION AND CONSENT.

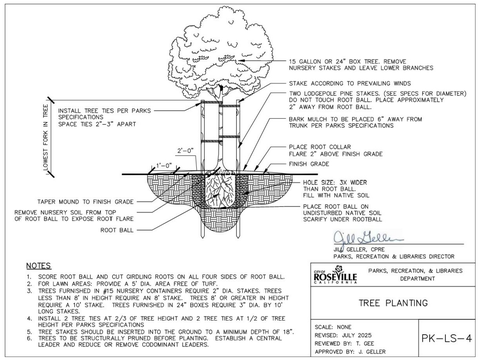

A TREE PLANTING

NOT TO SCALE PR-25027-20

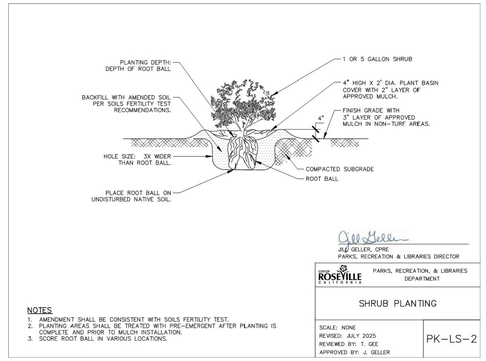

B SHRUB PLANTING

NOT TO SCALE PR-25027-18

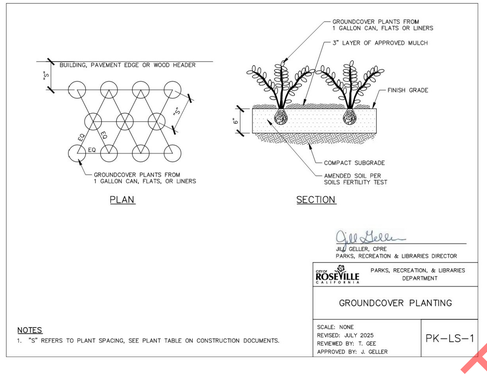

C GROUNDCOVER PLANTING

NOT TO SCALE PR-25027-17

Sunland Analytical
11419 Sunrise Gold Circle, #10
Rancho Cordova, CA 95742
(916) 852-8557

Date Reported 01/30/2026
Date Submitted 01/27/2026

To: Joel DeJong
City Of Roseville
311 Vernon St.
Roseville,CA 95678

From: Gene Oliphant, Ph.D. \
General Manager \

The reported analysis was requested for the following:
Location : PARK SITE JM-52 Site ID : JM-52.
Thank you for your business.

* For future reference to this analysis please use SUN # 97374-198895.

SOIL ANALYSIS

Saturation Percent (SP)	51		Soil Texture Clay Loam
pH	6.22		
E.C.	0.31	mmho/cm	
Tot.Dissolved Salts	198.4	ppm	
Infiltration Rate (0% Slope)	0.25	in/hr	
% Organic Matter	3.4		
C.E.C.	12.3	meq/100g	
Sodium Absorption Ratio (SAR)	1.6		
Exchangable Sodium Percent (ESP)	1.1		
Gypsum Req. (CaSO4*2H2O)	None Required		
est. Nitrogen Release	1.4	#/1000 sq.ft.	

Nitrate	0.33	ppm	*
Phosphorus	28.08	ppm	**********
Potassium	70.84	ppm	**********
Sulfur	6.10	ppm	********
Chloride	17.18	ppm	**********
Carbonates	50.05	ppm	**********
Sodium	30.87	ppm	**********
Calcium	1576.36	ppm	**********
Magnesium	505.57	ppm	**********
Boron	0.03	ppm	
Copper	0.69	ppm	******
Iron	20.03	ppm	**********
Manganese	18.22	ppm	**********
Zinc	0.20	ppm	******

Very Low | Low | Adequate | Excessive

Sunland Analytical
11419 Sunrise Gold Circle, #10
Rancho Cordova, CA 95742
(916) 852-8557

DATE 01/30/2026
SUN NUMBER 198895

Information requested by: Joel DeJong, City Of Roseville
Information for: PARK SITE JM-52, Sample ID: JM-52

SOIL RECOMMENDATIONS FOR LANDSCAPE GARDENING

SOIL pH (Acidity and Alkalinity)
The pH of this sample indicates the soil is moderately acid and should be modified for non acid-tolerant plants. Apply 17 pounds of Lime per 1000 sq.ft. and work into ground before planting.

DISSOLVED SALTS (Indicated by E.C. & TDS)
These conditions are in the normal range for plant growth.

SOIL TEXTURE AND RATE OF WATER INFILTRATION
The infiltration rate for all soil textures decreases with increasing ground slope. At 0 to 4%, 5 to 8%, 9 to 12%, 13 to 16% and above 16% the infiltration rate of this sample decreases from 0.25 to 0.20, 0.15, 0.10, 0.06, respectively. Infiltration rate also decreases with percent of ground cover and by compaction.

WATER PENETRATION OF SOIL DUE TO CHEMICAL CHARACTERISTICS
When exchangable Sodium increases in the soil, water penetration decreases. Based on SAR and ESP values this sample has no penetration problem due to soil Sodium. No Gypsum required.

ORGANIC MATTER
Organic matter provides a slow nitrogen release and aids water retention. This sample has a moderate Organic Matter content.
To maintain moisture and provide sustained nitrogen release a level of 10% organic matter is recommended. This can be accomplished by adding 3 yards per 1000 sq.ft. of ground fir bark that is approximately 75% organic matter (i.e. typically found in ground fir bark which also has naturally low salt and boron concentrations). In California, the MWELO ordenance requires a fixed application of four yards of COMPOST if the soil organic matter is less than 6%. However, of significant concern when applying COMPOST is the potential for the compost to have high salt, high boron content, high C to N ratio and having a higly variable pH (very high to very low). All of these COMPOST characteristics can have very negative affect on plant growth. Take care by having the compost analyzed or by seeing a recent analysis of the compost to be used.

Sunland Analytical
11419 Sunrise Gold Circle, #10
Rancho Cordova, CA 95742
(916) 852-8557

PAGE #2
DATE 01/30/2026
SUN NUMBER 198895

Information requested by: Joel DeJong, City Of Roseville
Information for: PARK SITE JM-52, Sample ID: JM-52

SOIL RECOMMENDATIONS FOR LANDSCAPE GARDENING

SOIL BORON
Boron concentration is below adequate level. Apply 0.5 (1/2) oz./1000 sq.ft. of boric acid. Dissolve in 2 gallons of water and apply by spraying. Apply carefully because excess boron is toxic to plants !!

SOIL MICRONUTRIENTS
Micronutrients, Copper, Iron, Manganese and Zinc, in soil are present in small amounts. However, they play a necessary role in plant metabolism. Without appropriate amounts plants will not thrive. Apply the following per 1000/ sq.ft. Do not mix micronutrients during application (use a separate application for each element indicated).
Because copper, manganese and zinc are in very small amounts, dissolve (each) in 2 gallons of water and use a sprayer to obtain an even application.
Apply 0.2 # Copper Sulfate, 0.5 # Zinc Sulfate and water.
SOIL MACRONUTRIENTS : NITROGEN-PHOSPHORUS-POTASSIUM (N-P-K)
GENERAL N-P-K RECOMMENDATION

Use ONE of these NPK preparations for the first fertilizer application.

Standard NPK Fertilizer Preparations	6-24-24	5-20-10	16-16-16	0-10-10	28-3-4	21-0-0	Customer Choice None
#/1000 sq.ft.	21	25	8	N/A	N/A	N/A	**

GRASS OR SOD PREPARATION
Till in organic matter, N,P,K and micro nutrients in addition to any lime gypsum or sulfur as directed above. Smooth soil surface and follow seed or sod producers direction for moisture and product application.

TREES AND SHRUBS
Excavate holes for planting shrubs and trees to at least twice the volume of the container. Prepare backfill for tree and shrub planting holes by mixing three parts of native soil (or imported top soil) with one part organic amendment (preferably nitrogen and iron fortified) and 2.5 pounds of 6-24-24 per yard of mix. For extended fertilization, place slow release fertilizer tablets in each hole per manufacturer's instructions. If 6-24-24 was not directly added to backfill mix, during backfill apply uniformly 1/2 oz of 6-24-24 per gallon containers, 2.5 oz per 5 gallons, 6 oz per 24 inch boxes.

Sunland Analytical
11419 Sunrise Gold Circle, #10
Rancho Cordova, CA 95742
(916) 852-8557

PAGE #3
DATE 01/30/2026
SUN NUMBER 198895

Information requested by: Joel DeJong, City Of Roseville
Information for: PARK SITE JM-52, Sample ID: JM-52

SOIL RECOMMENDATIONS FOR LANDSCAPE GARDENING

Summary and Suggested Sequence of Soil Improvements (#/1000 Sq.Ft.)

Lime	17	#	
Organic Amendment	3	Yd./1000 Sq.Ft. Bulk organic amendment (nitrified). or in Calif. if Org.Mat. less than 6% use 4 yd compost.
N-P-K Fertilizer	See above chart		
Micro Nutrients			
Copper	0.2	#	Copper sulfate
Zinc	0.5	#	Zinc Sulfate
Boron	0.5	oz	Boric Acid - excess TOXIC !!!
Sulfate-Sulfur	2	#	Ammonium Sulfate

Maintenance Fertilization
Apply 5 pounds of Ammonium sulfate (21-0-0) per 1000 sq.ft.every month until plants become established. After established, apply 28-3-4 (or similar preparation) to provide desired growth rate and color.

D SOILS ANALYSIS REPORT

NOT TO SCALE

CITY OF ROSEVILLE GENERAL PLANTING NOTES

1. CONTRACTOR SHALL VERIFY ALL SITE CONDITIONS PRIOR TO BIDDING AND CONSTRUCTION.
2. ALL TREES SHALL BE TAGGED AND/OR APPROVED BY OWNER & LANDSCAPE ARCHITECT. NURSERY SOURCES SHALL BE AT OWNER/LANDSCAPE ARCHITECT'S DISCRETION.
3. ALL SHRUBS AND GROUND COVER AREAS SHALL BE TOP DRESSED WITH A THREE (3") INCH LAYER "WALK-ON" FIR BARK PER PLANS AND SPECIFICATIONS.
4. ALL TREES (EXCEPT IN TURF AREAS), SHRUBS AND GROUND COVERS (INCLUDING THOSE ON SLOPES) SHALL HAVE WATERING BASINS BUILT UP AT LEAST TWO (2) TIMES THE DIAMETER OF THE ROOTBALL. TREE AND SHRUB BASINS SHALL BE A MINIMUM OF THREE (3") INCHES HIGH. GROUND COVER BASINS SHALL BE A MINIMUM OF TWO (2") INCHES HIGH.
5. ALL PLANT MATERIALS SHALL BE IMMEDIATELY "HAND" WATERED AFTER PLANTING AND CONTINUALLY MONITORED AND SUPPLEMENTALLY "HAND" WATERED DURING THE CONSTRUCTION AND CONTRACT MAINTENANCE PHASES AS NEEDED.
6. SUBSTITUTION OF PLANT MATERIALS WILL NOT BE ACCEPTABLE UNLESS OTHERWISE APPROVED BY THE LANDSCAPE ARCHITECT.
7. ALL PLANT MATERIALS DELIVERED TO THE SITE MUST HAVE AT LEAST ONE OF EACH PLANT TYPE TAGGED WITH THE GENUS AND SPECIES CLEARLY MARKED. PLANTS OF THE SAME GENUS TYPE WITH DIFFERENT SPECIES TYPE WITH DIFFERENT COLOR OR SPECIES VARIATION MUST HAVE ALL OF EACH DIFFERENT SPECIES CLEARLY TAGGED.
8. ALL PLANT HOLES SHALL BE DUG TO A MINIMUM OF TWO (2) TIMES THE PLANT CONTAINER WIDTH (WIDTH ONLY, NOT DEPTH) AND ALL VERTICAL SIDES IN THE HOLES SHALL BE SHOVEL SCORED. IN NO CASE SHALL SMOOTHLY EXCAVATED SIDES BE ALLOWED FOR PLANTING.
9. PRIOR TO PLANTING OF ANY MATERIALS, COMPACTED SOILS SHALL BE TRANSFORMED INTO A FRIABLE CONDITION. ON ENGINEERED SLOPES, ONLY AMENDED PLANTING HOLES NEED TO MEET THIS REQUIREMENT. "FRIABLE" MEANS A SOIL CONDITION THAT IS EASILY CRUMBLED OR LOOSELY COMPACTED DOWN TO A MINIMUM PLANTING DEPTH PER PLANTING MATERIAL WHEREBY THE ROOT STRUCTURE OR NEWLY PLANTED MATERIAL WILL BE ALLOWED TO SPREAD UNIMPEDED.
10. PREPARE ALL PLANTING AREAS WITH FOUR (4) CUBIC YARDS/1,000 S.F. OF NITROLIZED ORGANIC SOIL CONDITIONER. ROTOTILL EVENLY TO A DEPTH OF SIX (6") INCHES INTO EXISTING SOIL.
11. PROVIDE SOILS FERTILITY TEST, AS PER SPECIFICATIONS, TO LANDSCAPE ARCHITECT PRIOR TO COMMENCING WITH WORK. PREPARE ALL PLANTING AREAS WITH THE MINIMUM OF SOIL CONDITIONER AS STATED IN NOTE #10 ABOVE, OR AS PER RECOMMENDATIONS OF SOILS FERTILITY TEST, WHICHEVER IS GREATER. PROVIDE FERTILIZER PER SOILS FERTILITY REPORT. ROTOTILL EVENLY TO A DEPTH OF SIX (6") INCHES INTO EXISTING SOIL.
12. IF ANY PORTION OF THE SITE IS LIME TREATED, THE LANDSCAPE CONTRACTOR SHALL IMMEDIATELY NOTIFY THE ARCHITECT IN WRITING. DO NOT PROCEED WITH ANY WORK IN LIME TREATED SOIL. TYPICALLY, LIME TREATED SOILS ABOVE 1% RESULT IN PH VALUES AND COMPACTION THAT ARE DELETERIOUS TO PLANT MATERIAL, EVEN WITH AGGRESSIVE AMENDMENTS AND CONDITIONERS. THESE LIME TREATED SOILS MUST BE REMOVED AND REPLACED WITH IMPORT SOILS OF SUITABLE CHEMISTRY AND COMPATIBLE TEXTURE. THE LANDSCAPE CONTRACTOR SHALL NOT PROCEED WITH ANY WORK IN LIME TREATED AREAS UNTIL A RESOLUTION IS PROVIDED IN WRITING.
13. ALL LANDSCAPE BERMS ARE TO BE GRADED SIX (6") INCHES HIGHER THAN THE HIGHEST CONTOUR SHOWN ON PLANS, TYPICAL.
14. ALL LANDSCAPE AREAS WITH A SLOPE OF TWO AND A HALF TO ONE (2-1/2:1) OR GREATER MUST HAVE JUTE NETTING INSTALLED FOR EROSION CONTROL.
15. SHRUB AND GROUND COVER AREAS SHALL BE TREATED WITH CHIPCO RONSTAR 'G' PRE-EMERGENT HERBICIDE. PROVIDE PER MANUFACTURER'S SPECIFICATIONS.

FOR CONSTRUCTION ONLY - NOT FOR CONSTRUCTION!

FUHRMAN LEAMY LAND GROUP HEREBY EXPRESSLY RESERVES ITS COMMON LAW COPYRIGHT AND OTHER PROPERTY RIGHTS IN THESE PLANS. THESE PLANS AND DRAWINGS ARE NOT TO BE REPRODUCED, CHANGED OR COPIED IN ANY FORM OR MANNER WHATSOEVER WITHOUT FIRST OBTAINING THE EXPRESS WRITTEN PERMISSION OF FUHRMAN LEAMY LAND GROUP NOR ARE THEY TO BE ASSIGNED TO ANY THIRD PARTY WITHOUT FIRST OBTAINING WRITTEN PERMISSION AND CONSENT

FUHRMAN LEAMY
LAND GROUP
DESIGN • SERVICE • SOLUTIONS
3400 DOUGLAS BLVD, SUITE 275
ROSEVILLE, CALIFORNIA 95661
916.783.5263 • FLLANDGROUP.COM

JOB NO. : CRV- 25027

CITY OF ROSEVILLE APPROVAL

PROJECT:
JM-52 PARK
5097 MISTY RIDGE DRIVE
ROSEVILLE, CA

CLIENT:
CITY OF ROSEVILLE

REVISIONS	DATE
△	
△	
△	
△	

ISSUE		DATE
1	1ST SUBMITTAL	9.05.2025
2	2ND SUBMITTAL	10.08.2025
3	3RD SUBMITTAL	11.21.2025
4	4TH SUBMITTAL	1.28.2026
5		

REGISTERED LANDSCAPE ARCHITECT
KEVIN C. LEAMY
No. 4965
Signature
12/31/26
Renewal Date
1.15.2026
Date
STATE OF CALIFORNIA

DRAWN : AM
CHECKED : KCL
SCALE: : AS SHOWN

SHEET TITLE:
LANDSCAPE PLANTING NOTES & DETAILS

SHEET
LP-2.0
24 OF 30 SHEETS

FUHRMAN LEAMY LAND GROUP HEREBY EXPRESSLY RESERVES ITS COMMON LAW COPYRIGHT AND OTHER PROPERTY RIGHTS IN THESE PLANS. THESE PLANS AND DRAWINGS ARE NOT TO BE REPRODUCED, CHANGED OR COPIED IN ANY FORM OR MANNER WHATSOEVER WITHOUT FIRST OBTAINING THE EXPRESS WRITTEN PERMISSION OF FUHRMAN LEAMY LAND GROUP, NOR ARE THEY TO BE ASSIGNED TO ANY THIRD PARTY WITHOUT FIRST OBTAINING WRITTEN PERMISSION AND CONSENT.

ELECTRICAL ABBREVIATION

ABBREVIATION	DESCRIPTION
A	AMPERES, AMBER
AC	ALTERNATING CURRENT, AIR CONDITIONER
AFC	ABOVE FINISHED CEILING
AFF	ABOVE FINISHED FLOOR
AFG	ABOVE FINISHED GRADE
AIC	AVAILABLE INTERRUPTING CAPACITY
AWG	AMERICAN WIRE GAUGE
BC	BARE COPPER
C	CONDUIT, CLOSE, CONTROL
CB	CIRCUIT BREAKER
CFCI	CONTRACTOR FURNISHED CONTRACTOR INSTALLED
CFOI	CONTRACTOR FURNISHED OWNER INSTALLED
CLG	CEILING
COM	COMMUNICATION
CT	CURRENT TRANSFORMER
CU	COPPER
(D)	DEMOLISH
DN	DOWN
(E)	EXISTING
EF	EXHAUST FAN
ECH	ELECTRIC CONVECTION HEATER
F	FUSE
FACP	FIRE ALARM CONTROL PANEL
FBO	FURNISHED BY OTHERS
G, GND	GROUND
GFCI	GROUND FAULT CIRCUIT INTERRUPTER
GFI	GROUND FAULT INTERRUPTER
GRC	GALVANIZED RIGID STEEL CONDUIT
KVA	KILOVOLT AMPERES
KW	KILOWATT
LED	LIGHT EMITTING DIODE
MDB	MAIN DISTRIBUTION BOARD
MDP	MAIN DISTRIBUTION PANEL
MSB	MAIN SWITCHBOARD
MT, MTD	MOUNT, MOUNTED
MT	EMPTY CONDUIT WITH NYLON PULL CORD
N/A	NOT APPLICABLE
(N)	NEW
N	NEUTRAL
NEC	NATIONAL ELECTRIC CODE
NEMA	NATIONAL ELECTRICAL MANUFACTURERS ASSOCIATION
OFCI	OWNER FURNISHED, CONTRACTOR INSTALLED
OFOI	OWNER FURNISHED, OWNER INSTALLED
OS	OCCUPANCY SENSOR
PH	PHASE
PHP	PACKAGED HEAT PUMP
PNL	PANEL
REF	REFERENCE
REQD	REQUIRED
S	SWITCH
SIM	SIMILAR
TELE	TELEPHONE
TTB	TELEPHONE TERMINAL BOARD
TYP	TYPICAL
UL	UNDERWRITERS LABORATORIES
UON	UNLESS OTHERWISE NOTED
V	VOLTS, VOLTAGE
W/	WITH
W	WIRE, WHITE
WP	WEATHERPROOF
XFMR	TRANSFORMER

ELECTRICAL LEGEND

SYMBOL	DESCRIPTION
	GENERAL
X / X	DETAIL NUMBER AND SHEET LOCATION
	NEW WORK
##	CONDUIT AND WIRE TAG
	KEYED NOTE
	LIGHTING
	AREA LUMINAIRE ARM MOUNTED WITH POLE AND CONCRETE BASE
	MISCELLANEOUS
#10 B-27,29,31. B-27,29,31.	BRANCH CIRCUIT WIRING. ARROW INDICATES HOME RUN TO PANEL WITH CIRCUITS AS NOTED. WIRE SIZE IS #12 AWG MINIMUM UNLESS NOTED OTHERWISE. SHORT TICK MARKS INDICATE PHASE CONDUCTORS. LONG TICK MARKS INDICATE NEUTRAL CONDUCTORS. A SINGLE CURVED TICK MARK INDICATES INSULATED GREEN GROUND CONDUCTOR. SECOND CURVED TICK MARK INDICATES "ISOLATED GROUND" (GREEN INSULATION WITH YELLOW STRIPE) CONDUCTOR.
	BRANCH PANEL
	CIRCUIT BREAKER
	CURRENT TRANSFORMER
M	DIGITAL TYPE METER WITH VOLTMETER, AMMETER, KW METER, KVA METER, KVAR METER, AND %THD METER
	EQUIPMENT CONNECTION ITEM. REFER TO SCHEDULE
	FLUSH MOUNT EQUIPMENT ENCLOSURE AS NOTED
	FLUSH WALL MOUNTED BRANCH PANEL
	GROUND ROD
	GROUNDING POINT
	LANDING LUG
	MAIN DISTRIBUTION PANEL / SUB DISTRIBUTION PANEL
M	METER WITH CONNECTION
	SURFACE MOUNT EQUIPMENT ENCLOSURE AS NOTED
	RACEWAYS
	CONDUIT CONCEALED IN WALL OR CEILING SPACE
	CONDUIT ROUTED BELOW FLOOR / GRADE
	CONDUIT ELLED DOWN
	CONDUIT ELLED UP
	CONDUIT/WIRING CONTINUATION
	CONDUIT/WIRING STUBBED OUT WITH END CAP OR INSULATED PLASTIC BUSHING

ELECTRICAL LEGEND

SYMBOL	DESCRIPTION
UT	UTILITY TRANSFORMER PAD/VAULT
	WALL MOUNTING BRACKET
	WATER PIPE GROUND CONNECTION
	CONNECTIONS / EQUIPMENT
	HEAVY DUTY FUSED DISCONNECT SWITCH
J OR J	JUNCTION BOX
J	JUNCTION BOX WITH FLEX CONNECTION TO EQUIPMENT
J	WALL-MOUNTED JUNCTION BOX
	NON-FUSED DISCONNECT SWITCH
T	TRANSFORMER
PB	PULL BOX
	ENCLOSED CIRCUIT BREAKER
XX-1 (SEE SCHEDULE)	MOTOR / ELECTRICAL EQUIPMENT

ELECTRICAL GENERAL NOTES

A. ALL WORK SHALL COMPLY WITH ALL LOCAL AND STATE CODES AND AUTHORITIES HAVING JURISDICTION.

B. THE CONTRACTOR SHALL SECURE AND PAY FOR ALL REQUIRED PERMITS AND ARRANGE ALL REQUIRED INSPECTIONS.

C. THE CONTRACTOR SHALL COORDINATE HIS WORK WITH OTHER CONTRACTORS AND TRADES.

D. THESE DRAWINGS, AS PREPARED, ARE DIAGRAMMATIC BUT SHALL BE FOLLOWED AS CLOSELY AS CONSTRUCTION OF THE PROJECT AND THE WORK OF THE TRADES WILL PERMIT. EQUIPMENT LOCATIONS INDICATED ARE APPROXIMATE. COORDINATE EXACT LOCATIONS AND REQUIRED CLEARANCES WITH EQUIPMENT SUPPLIER AND ALL TRADES PRIOR TO INSTALLATION.

E. THE CONTRACTOR SHALL FURNISH AND INSTALL ALL THE EQUIPMENT INDICATED WITHIN THESE DRAWINGS UNLESS OTHERWISE NOTED. VERIFY LOCATION AND DIMENSIONS IN THE FIELD PRIOR TO FABRICATION AND / OR INSTALLATION.

F. THE ENTIRE INSTALLATION SHALL BE GUARANTEED FREE OF DEFECTS AND CONTRACTOR SHALL REPAIR AND / OR REPLACE ANY DEFECTIVE MATERIALS OR EQUIPMENT AT NO COST TO THE OWNER FOR A MINIMUM PERIOD OF ONE YEAR FROM THE DATE OF ACCEPTANCE BY ARCHITECT OR ENGINEER.

G. ALL WORK SHALL BE SUBJECT TO THE ACCEPTANCE AND APPROVAL OF THE ARCHITECT AND OWNER. THE ARCHITECT SHALL BE NOTIFIED OF ANY AND ALL DISCREPANCIES BETWEEN FIELD CONDITIONS AND THE CONTRACT DOCUMENTS BEFORE PROCEEDING WITH THAT PORTION OF THE WORK. FAILURE OF PROPER NOTIFICATION DOES NOT RELIEVE THE CONTRACTOR. THE CONTRACTOR SHALL CORRECT ANY AND ALL WORK ARISING FROM SUCH FAILURE TO COORDINATE DISCREPANCIES TO THE SATISFACTION OF THE ARCHITECT WITHOUT ADDITIONAL COST TO THE OWNER.

H. CONTRACTOR SHALL COORDINATE ALL ELECTRICAL SERVICE REQUIREMENTS WITH ROSEVILLE ELECTRIC.

FOR COUNCIL ONLY - NOT FOR CONSTRUCTION

SHEET INDEX

E0.1	ELECTRICAL COVER SHEET
E0.2	ONE-LINE DIAGRAM & ELEVATION, FEEDER SCHEDULE AND LOAD CALCULATIONS
E0.3	TITLE 24 LTO FORMS
E1.0	ELECTRICAL SITE PLAN
E2.0	ELECTRICAL DETAILS
E2.1	ELECTRICAL DETAILS

capital engineering
RANCHO CORDOVA, CALIFORNIA
NH - JC — PM - DESIGN TEAM
250275.00 — PROJECT NO.

FUHRMAN LEAMY
LAND GROUP
DESIGN • SERVICE • SOLUTIONS
3400 DOUGLAS BLVD, SUITE 275
ROSEVILLE, CALIFORNIA 95661
916.783.5263 • FLLANDGROUP.COM

JOB NO. :CRV: 25027

CITY OF ROSEVILLE APPROVAL

PROJECT:
JM-52 PARK

2097 MISTY RIDGE DRIVE
ROSEVILLE, CA

CLIENT:
CITY OF ROSEVILLE

REVISIONS	DATE
1	
2	
3	
4	

ISSUE		DATE
1	1ST SUBMITTAL	9.05.2025
2	2ND SUBMITTAL	10.08.2025
3	3RD SUBMITTAL	11.21.2025
4		
5		

REGISTERED PROFESSIONAL ENGINEER
NATHAN A. HEARN
No. E 23927
3-31-2026
ELECTRICAL
STATE OF CALIFORNIA
Date Signed: 11/18/25

DRAWN : JC
CHECKED : NH
SCALE: : AS SHOWN

SHEET TITLE:
ELECTRICAL COVER SHEET

SHEET
E0.1
25 OF 30 SHEETS

FUHRMAN LEAMY LAND GROUP HEREBY EXPRESSLY RESERVES ITS COMMON LAW COPYRIGHT AND OTHER PROPERTY RIGHTS IN THESE PLANS. THESE PLANS AND DRAWINGS ARE NOT TO BE REPRODUCED, CHANGED OR COPIED IN ANY FORM OR MANNER WHATSOEVER WITHOUT FIRST OBTAINING THE EXPRESS WRITTEN PERMISSION OF FUHRMAN LEAMY LAND GROUP, NOR ARE THEY TO BE ASSIGNED TO ANY THIRD PARTY WITHOUT FIRST OBTAINING WRITTEN PERMISSION AND CONSENT.

POWER CONDUIT & WIRE ROUTING SCHEDULE

ID	CONDUIT NO AND SIZE	CONDUCTORS PER CONDUIT NO AND SIZE	FROM	TO	REMARKS
P0	1 2" PVC	3 #1 PWR	ELECTRIC UTILITY SERVICE CONNECTION POINT	UTILITY SERVICE PEDESTAL	PWR: ROSEVILLE ELECTRIC SECONDARY SERVICE
P1	1 3/4" PVC	1 #6 GND	UTILITY SERVICE PEDESTAL	GROUND ROD BOX	
P2	1 1" PVC	2 #12 PWR 1 #12 GND	UTILITY SERVICE PEDESTAL	UNDERGROUND CONCRETE PULL BOX	PWR: 120VAC, 1 PH
P3	1 1" PVC	2 #12 PWR 1 #12 GND	UNDERGROUND CONCRETE PULL BOX	LIGHT POLE	PWR: 120VAC, 1PH
P4	1 1" PVC	2 #12 PWR 1 #12 GND	UTILITY SERVICE PEDESTAL	UNDERGROUND CONCRETE PULL BOX	PWR: 120VAC, 1 PH
P5	1 1" PVC	2 #12 PWR 1 #12 GND	UNDERGROUND CONCRETE PULL BOX	IRRIGATION CONTROLLER	PWR: 120VAC, 1 PH
P6	2 1" PVC	PULL CORD	UTILITY SERVICE PEDESTAL	UNDERGROUND CONCRETE PULL BOX	SPARE CONDUITS

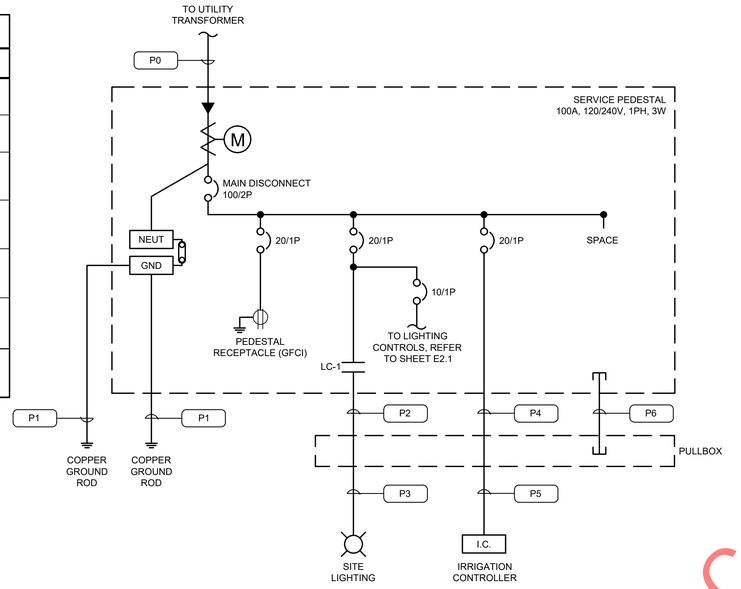

ONE-LINE DIAGRAM

SCALE : NOT TO SCALE

2 / E0.2

UTILITY SERVICE PEDESTAL LOAD CALCULATION

PEDESTAL RECEPTACLE	=	180 VA
SECURITY LIGHT POLE	=	39 VA
IRRIGATION CONTROLLER	=	516 VA
SUB-TOTAL	=	735 VA
+25% CONTINUOUS	=	10 VA
TOTAL	=	745 VA

UTILITY SERVICE:
745 VA/240 VOLTS = 3.1 AMPS
REQUIRED SERVICE = 120/240V, 1Ø, 3W, 100 AMPS

SERVICE PEDESTAL NAMEPLATE SCHEDULE

No.	LETTER SIZE	INSCRIPTION
1	3/16"	MAIN DISCONNECT
2	3/16"	PEDESTAL RECEPTACLE
3	3/16"	SITE LIGHTING/CONTROLS
4	3/16"	IRRIGATION CONTROLLER
5	3/16"	LIGHTING CONTROLS DISCONNECT
6	3/16"	LIGHTING CONTROLS HAND-OFF-AUTO
7	1/4"	SERVICE PEDESTAL

VOLTAGE DROP CALCULATION

CEC 215.2(A)(3) FPN No. 2

3 PHASE FORMULA: $VD=\frac{\sqrt{3}*L*R*A}{1000}$ $\%VD=\frac{VD*100\%}{V}$

1 PHASE FORMULA: $VD=\frac{2*L*R*A}{1000}$ $\%VD=\frac{VD*100\%}{V}$

PANEL - CKT	DISTANCE (FT)	AMPS	VOLTAGE	CONDUCTOR TYPE	PHASE	WIRE SIZE	CONDUIT	IMPEDANCE: OHMS/kFT	VD	%VD
PED. 3	150	2	120	CU	1	#12	PVC	1.700	0.88	0.74%

1. CONDUCTOR IMPEDANCE VALUES BASED ON CEC CHAPTER 9 TABLE 9 - EFFECTIVE IMPEDANCE FOR UNCOATED COPPER WIRES IN PVC OR STEEL CONDUIT @ 0.85 PF (OHM/kFT)

2. PER CEC 210.19(A)(1)FPN NO. 4: BRANCH CIRCUITS ARE ALOWED 3% VOLTAGE DROP AND THE MAXIMUM TOTAL VOLTAGE DROP ON BOTH FEEDERS AND BRANCH CIRCUITS TO THE FARTHEST OUTLET DOES NOT EXCEED 5%

SERVICE PEDESTAL CONSTRUCTION NOTES

1. EXTERIOR 12 GA. GALVANIZED STEEL AND INTERIOR 14 GA. COLD ROLLED STEEL ELECTRICALLY WELDED AND REINFORCED WHERE REQUIRED.
2. CONSTRUCTION SHALL BE NEMA 3R AND 12, RAINTIGHT AND DUSTTIGHT.
3. ALL NUTS, BOLTS, SCREWS AND HINGES SHALL BE STAINLESS STEEL.
4. NUTS, BOLTS & SCREWS SHALL NOT BE VISIBLE FROM OUTSIDE OF PEDESTAL.
5. PHENOLIC NAMEPLATES SHALL BE PROVIDED AS REQUIRED.
6. CONTROL WIRING WILL BE MARKED AT BOTH ENDS BY PERMANENT WIRE MARKERS. STICK ON WIRE MARKERS ARE NOT ACCEPTABLE.
7. A PLASTIC COVERED WIRING DIAGRAM WILL BE ATTACHED TO THE INSIDE OF THE FRONT DOOR.
8. PEDESTAL SHALL BE FACTORY WIRED AND CONFORM TO REQUIRED NEMA STANDARDS.
9. PEDESTAL WILL BE U.L. LISTED AS INDUSTRIAL CONTROL PANELS U.L. 508 FILE NO. E62062
10. EXTERIOR COLOR IS TO BE HUNTER GREEN, REMOVABLE INTERIOR SHEET METAL TO BE WHITE.

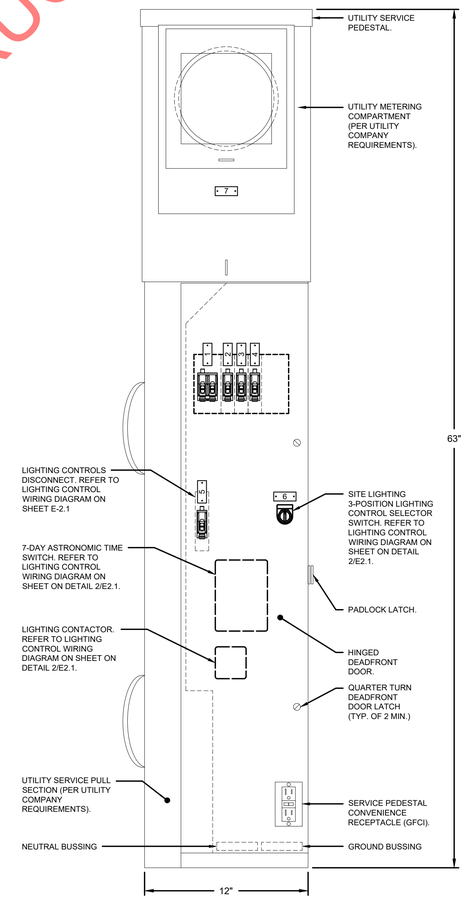

UTILITY SERVICE PEDESTAL - ELEVATION

SCALE : NOT TO SCALE

1 / E0.2

FOR COUNCIL ONLY - NOT FOR CONSTRUCTION

FUHRMAN LEAMY LAND GROUP
DESIGN • SERVICE • SOLUTIONS
3400 DOUGLAS BLVD, SUITE 275
ROSEVILLE, CALIFORNIA 95661
916.783.5263 • FLLANDGROUP.COM

JOB NO. :CRV: 25027

CITY OF ROSEVILLE APPROVAL

PROJECT:
JM-52 PARK
2097 MISTY RIDGE DRIVE
ROSEVILLE, CA

CLIENT:
CITY OF ROSEVILLE

REVISIONS	DATE
△	
△	
△	
△	

ISSUE		DATE
1	1ST SUBMITTAL	9.05.2025
2	2ND SUBMITTAL	10.08.2025
3	3RD SUBMITTAL	11.21.2025
4		
5		

REGISTERED PROFESSIONAL ENGINEER
NATHAN A. HEARN
No. E 23927
3-31-2026
ELECTRICAL
STATE OF CALIFORNIA

Date Signed: 11/18/25

DRAWN	:	JC
CHECKED	:	NH
SCALE:	:	AS SHOWN

SHEET TITLE:
ONE-LINE DIAGRAM & ELEVATION, FEEDER SCHEDULE AND LOAD CALCULATIONS

SHEET
E0.2
26 OF 30 SHEETS

capital engineering
RANCHO CORDOVA, CALIFORNIA
NH - JC 250275.00
PM - DESIGN TEAM PROJECT NO.

FUHRMAN LEAMY LAND GROUP HEREBY EXPRESSLY RESERVES ITS COMMON LAW COPYRIGHT AND OTHER PROPERTY RIGHTS IN THESE PLANS. THESE PLANS AND DRAWINGS ARE NOT TO BE REPRODUCED, CHANGED OR COPIED IN ANY FORM OR MANNER WHATSOEVER WITHOUT FIRST OBTAINING THE EXPRESS WRITTEN PERMISSION OF FUHRMAN LEAMY LAND GROUP, NOR ARE THEY TO BE ASSIGNED TO ANY THIRD PARTY WITHOUT OBTAINING WRITTEN PERMISSION AND CONSENT.

STATE OF CALIFORNIA
Outdoor Lighting CALIFORNIA ENERGY COMMISSION

CERTIFICATE OF COMPLIANCE	NRCC-LTO-E
Project Name: Roseville JM-52 Park	**Report Page:** (Page 1 of 7)
Project Address:	**Date Prepared:** 10/1/2025

This document is used to demonstrate compliance with requirements in 110.9, 130.0, 130.2, 140.7, and 141.0(b)2L for outdoor lighting scopes using the prescriptive path for nonresidential and hotel/motel occupancies. It is also used to document compliance with requirements in 160.5, 170.2(e)6, 180.1(a) and 180.2(b)4Bv for outdoor lighting scopes using the prescriptive path for multifamily and mixed-use occupancies. Multifamily includes dormitory and senior living facilities.

A. GENERAL INFORMATION

01	Project Location (city)	Roseville	04	Total Illuminated Hardscape Area (ft²)	1256
02	Climate Zone	12			
03	Outdoor Lighting Zone per Title 24 Part 1 10.114 or as designated by Authority Having Jurisdiction (AHJ):				
☐ LZ-0: Very Low - Undeveloped Parkland	☒ LZ-2: Moderate - Urban Clusters	☐ LZ-4: High - Must be reviewed by CA Energy Commission for Approval			
☐ LZ-1: Low - Rural Areas	☐ LZ-3: Moderately High - Urban Areas				
05	Occupancy Types within Project				
• All Other Occupancies					

B. PROJECT SCOPE

This table includes outdoor lighting systems that are within the scope of the permit application and are demonstrating compliance using the prescriptive path outlined in 140.7 / 170.2(e)6 or 141.0(b)2L / 180.2(b)4Bv for alterations.

My Project Consists of:

01	02		
☒ New Lighting System	Must Comply with Allowances from 140.7 / 170.2(e)6		
☐ Altered Lighting System	Is your alteration increasing the connected lighting load (Watts)?	○ Yes	○ No
03	04	05	
% of Existing Luminaires Being Altered[1]	Sum Total of Luminaires Being Added or Altered	Calculation Method	
☐ < 10% ☐ >= 10% and < 50% ☐ >= 50%			

Please proceed to Table F. Outdoor Lighting Fixture Schedule to define the project's luminaires.

[1] FOOTNOTES: % of Existing Luminaires Being Altered = (Sum Total of Luminaires Being Added or Altered / Existing Luminaires within the Scope of the Permit Application) x 100.

STATE OF CALIFORNIA
Outdoor Lighting CALIFORNIA ENERGY COMMISSION

CERTIFICATE OF COMPLIANCE	NRCC-LTO-E
Project Name: Roseville JM-52 Park	**Report Page:** (Page 2 of 7)
	Date Prepared: 10/1/2025

C. COMPLIANCE RESULTS

Results in this table are automatically calculated from data input and calculations in Tables F through N. Note: If any cell on this table says "COMPLIES with Exceptional Conditions" refer to Table D. Exceptional Conditions for guidance or see applicable Table referenced below.

Calculations of Total Allowed Lighting Power (Watts) 140.7 / 170.2(e)6 or 141.0(b)2L / 180.2(b)4Bv															Compliance Results			
01		02		03		04		05	OR	06	=	07		08	09
General Hardscape Allowance 140.7(d)1 / 170.2(e)6 (See Table I)	+	Per Application 140.7(d)2 / 170.2(e)6 (See Table J)	+	Sales Frontage 140.7(d)2 (See Table K)	+	Ornamental 140.7(d)2 / 170.2(e)6 (See Table L)	+	Per Specific Area 140.7(d)2 / 170.2(e)6 (See Table M)		Existing Power Allowance 141.0(b)2L / 180.2(b)4Bv (See Table N)		**Total Allowed** (Watts)	≥	**Total Actual** (Watts)	**07 must be >= 08**
243	+	---	+	---	+	---	+	---	OR	---	=	243	≥	39	COMPLIES
Shielding Compliance (See Table G for Details)															COMPLIES
Controls Compliance (See Table H for Details)															Not applicable

D. EXCEPTIONAL CONDITIONS

This table is auto-filled with uneditable comments because of selections made or data entered in tables throughout the form.

E. ADDITIONAL REMARKS

This table includes remarks made by the permit applicant to the Authority Having Jurisdiction.

STATE OF CALIFORNIA
Outdoor Lighting CALIFORNIA ENERGY COMMISSION

CERTIFICATE OF COMPLIANCE	NRCC-LTO-E
Project Name: Roseville JM-52 Park	**Report Page:** (Page 3 of 7)
	Date Prepared: 10/1/2025

F. OUTDOOR LIGHTING FIXTURE SCHEDULE

For new or altered lighting systems demonstrating compliance with 140.7 / 170.2(e)6 all new luminaires being installed and any existing luminaires remaining or being moved within the spaces covered by the permit application are included in the Table below. For altered lighting systems using the Existing Power method per 141.0(b)2L only new luminaires being installed and replacement luminaires being installed as part of the project scope are included (ie, existing luminaires remaining or existing luminaires being moved are not included). Outdoor lighting attached to multifamily buildings and controlled from the inside of a dwelling unit are included in Table H. and are not included here. All other multifamily outdoor lighting is included here.

Designed Wattage:

01	02	03	04	05	06	07	08	09	10	
Name or Item Tag	Complete Luminaire Description	Watts per luminaire[1,2]	How is Wattage determined	Total Number Luminaires[2]	Luminaire Status[3]	Excluded per 140.7(a) / 170.2(e)6A	Design Watts	Cutoff Req. > 6,200 initial lumen output 130.2(b) / 160.5(c)1[4]	Field Inspector	
									Pass	Fail
A	A	☐ Linear	39	Mfr. Spec	1	New	☐	39	Provided	☐ ☐
							Total Design Watts:	39		

* NOTES: Selections with a * require a note in the space below explaining how compliance is achieved.
EX: Luminaire is lighting a statue; EXCEPTION 2 to 130.2(b)

[1] FOOTNOTES: Authority Having Jurisdiction may ask for Luminaire cut sheets to confirm wattage used for compliance per 130.0(c) / 160.5(b)
[2] For linear luminaires, wattage should be indicated as W/lf instead of Watts/luminaire. Total linear feet should be indicated in column 05 instead of number of luminaires.
[3] Select "New" for new luminaires in a new outdoor lighting project, or for added luminaires in an alteration. Select "Altered" for replacement luminaires in an alteration. Select "Existing to Remain" for existing luminaires within the project scope that are not being altered and are remaining. Select "Existing Reinstalled" for existing luminaires which are being removed and reinstalled as part of the project scope.
[4] Compliance with mandatory shielding requirements is required for luminaires with initial lumen output >= 6,200 unless exempted by 130.2(b)/ 160.5(c)

STATE OF CALIFORNIA
Outdoor Lighting CALIFORNIA ENERGY COMMISSION

CERTIFICATE OF COMPLIANCE	NRCC-LTO-E
Project Name: Roseville JM-52 Park	**Report Page:** (Page 4 of 7)
	Date Prepared: 10/1/2025

G. SHIELDING REQUIREMENTS (BUG)

This table includes fixtures of >=6,200 initial lumens indicated on Table F as needing to comply with Shielding Requirements. Maximum lumens can be found in Title 24, Part 11, Section 5.106.8.

01	02	03	04	05	06	07	08	09	10	11	12	
Name or Item Tag	Complete Luminaire Description	Backlight Rating[2]			Uplight Rating[2]			Glare Rating (Lumens)[2]			Field Inspector	
		Mounting Height[1]	Max Allowable Backlight Rating[3]	Backlight Rating Per Design	Lighting type	Max Allowable Uplight Rating[3]	Uplight Rating Per Design	Mounting Height[1]	Max Allowable Glare Rating[3]	Glare Rating Per Design	Pass	Fail
A	A	2 MH from property line	No Limit	B3	All other outdoor lighting, including decorative	U2	U4	> 2 MH from property line	G2	G2	☐	☐

[1] FOOTNOTES: Mounting Height is labeled MH in this table.
[2] Authority Having Jurisdiction may ask for Luminaire cut sheets or other documentation to confirm luminaire type, uplight ratings and glare ratings used for compliance per 130.2(b)/ 160.5(c)
[3] BUG ratings with a lower number than the 'Max Allowable' are compliant. Ex. If Max Allowable is Bug Rating B4, then B0, B1, B2 and B3 are all compliant.

H. OUTDOOR LIGHTING CONTROLS

This table demonstrates compliance with controls requirements for all new or altered luminaires installed as part of the permit application. For alteration projects, luminaires which are existing to remain (ie untouched) and luminaires which are removed and reinstalled (wiring only) do not need to be included in this table even if they are within the spaces covered by the permit application.
Outdoor lighting for nonresidential buildings, parking garages and common service areas in multifamily buildings must be documented separately from outdoor lighting attached to multifamily buildings and controlled from the inside of a dwelling unit

Mandatory Controls for Nonresidential Occupancies, Parking Garages & Common Areas in Multifamily Buildings

01	02	03	04	05	
Area Description	Shut-Off 130.2(c)1 / 160.5(c)	Auto-Schedule 130.2(c)2 / 160.5(c)	Motion Sensor 130.2(c)3 / 160.5(c)	Field Inspector	
				Pass	Fail

[1] FOOTNOTE: Text has been abbreviated, please refer to Table 160.5-A to confirm compliance with the specific light source technologies listed.
[2] Authority having jurisdiction may ask for cutsheets or other documentation to confirm compliance of light source.
[3] Recessed luminaires marked for use in fire-rated installations, and recessed luminaires installed in non-insulated ceilings are excepted from ii and iii.

STATE OF CALIFORNIA
Outdoor Lighting CALIFORNIA ENERGY COMMISSION

CERTIFICATE OF COMPLIANCE	NRCC-LTO-E
Project Name: Roseville JM-52 Park	**Report Page:** (Page 5 of 7)
	Date Prepared: 10/1/2025

I. LIGHTING POWER ALLOWANCE (per 140.7 / 170.2(e))

This table includes areas using allowance calculations per 140.7 / 170.2(e). General Hardscape Allowance is per Table 140.7-A/Table 170.2-R while "Use it or lose it" Allowances are per Table 140.7-B /Table 170.2-S. Indicate which allowances are being used to expand sections for user input. Luminaires that qualify for one of the "Use it or lose it" allowances shall not qualify for another "Use it or lose it" allowance. Outdoor lighting attached to multifamily buildings and controlled from the inside of a dwelling unit are included in Table H. and are not included here. All other multifamily outdoor lighting is included here.

01				
	"Use it or lose it" Allowance (select all that apply) (select all that apply)			
☒ General Hardscape Allowance Table I (below)	☐ Per Application Table J	☐ Sales Frontage Table K	☐ Ornamental Table L	☐ Per Specific Area Table M

Calculated General Hardscape Lighting Power Allowance per Table 140.7-A for Nonresidential & Hotel/Motel

02	03	04	05	06	07	08	09
Area Description	Area Wattage Allowance (AWA)			Linear Wattage Allowance (LWA)			Total General AWA + LWA (Watts)
	Illuminated Area (ft²)	Allowed Density (W/ft²)	Area Allowance (Watts)	Perimeter Length (lf)	Allowed Density (W/lf)	Linear Allowance (Watts)	
Roseville JM-52 Park	1256	0.019	23.9	125	0.2	18.8	43
				Initial Wattage Allowance for Entire Site (Watts):			200
				Instances of Initial Wattage Allowance (LZ 0 only)[1]			
				Total General Hardscape Allowance (Watts):			243

J. LIGHTING ALLOWANCE: PER APPLICATION

This section does not apply to this project.

K. LIGHTING ALLOWANCE: SALES FRONTAGE

This section does not apply to this project.

L. LIGHTING ALLOWANCE: ORNAMENTAL

This section does not apply to this project.

STATE OF CALIFORNIA
Outdoor Lighting CALIFORNIA ENERGY COMMISSION

CERTIFICATE OF COMPLIANCE	NRCC-LTO-E
Project Name: Roseville JM-52 Park	**Report Page:** (Page 6 of 7)
	Date Prepared: 10/1/2025

M. LIGHTING ALLOWANCE: PER SPECIFIC AREA

This section does not apply to this project.

N. EXISTING CONDITIONS POWER ALLOWANCE (alterations only)

This section does not apply to this project.

O. DECLARATION OF REQUIRED CERTIFICATES OF INSTALLATION

Selections have been made based on information provided in this document. If any selection has been changed by permit applicant, an explanation should be included in Table E. Additional Remarks. These documents must be provided to the building inspector during construction and can be found online

Form/Title
NRCI-LTO-E - Must be submitted for all buildings

P. DECLARATION OF REQUIRED CERTIFICATES OF ACCEPTANCE

There are no NRCA forms required for this project.

STATE OF CALIFORNIA
Outdoor Lighting CALIFORNIA ENERGY COMMISSION

CERTIFICATE OF COMPLIANCE	NRCC-LTO-E
Project Name: Roseville JM-52 Park	**Report Page:** (Page 7 of 7)
Project Address:	**Date Prepared:** 10/1/2025

DOCUMENTATION AUTHOR'S DECLARATION STATEMENT

I certify that this Certificate of Compliance documentation is accurate and complete.

Documentation Author Name: Rustem Kopbayev	Documentation Author Signature: Rustem
Company: Capital Engineering Consultants Inc.	Signature Date: 2025-10-01
Address: 11020 Sun Center Drive Suite 100	CEA/ HERS Certification Identification (if applicable):
City/State/Zip: Rancho Cordova CA 95670	Phone: 916-851-3575

RESPONSIBLE PERSON'S DECLARATION STATEMENT

I certify the following under penalty of perjury, under the laws of the State of California:
1. The information provided on this Certificate of Compliance is true and correct.
2. I am eligible under Division 3 of the Business and Professions Code to accept responsibility for the building design or system design identified on this Certificate of Compliance (responsible designer).
3. The energy features and performance specifications, materials, components, and manufactured devices for the building design or system design identified on this Certificate of Compliance conform to the requirements of Title 24, Part 1 and Part 6 of the California Code of Regulations.
4. The building design features or system design features identified on this Certificate of Compliance are consistent with the information provided on other applicable compliance documents, worksheets, calculations, plans and specifications submitted to the enforcement agency for approval with this building permit application.
5. I will ensure that a completed signed copy of this Certificate of Compliance shall be made available with the building permit(s) issued for the building, and made available to the enforcement agency for all applicable inspections. I understand that a completed signed copy of this Certificate of Compliance is required to be included with the documentation the builder provides to the building owner at occupancy.

Responsible Designer Name: Nathan Hearn	Responsible Designer Signature: Nathan A Hearn
Company: Capital Engineering Consultants Inc.	Date Signed: 2025-10-01
Address: 11020 Sun Center Drive, Suite 100	License: E23927
City/State/Zip: Rancho Cordova CA 95670	Phone: 916-851-3568

NOT FOR CONSTRUCTION
FOR COUNCIL ONLY - NOT

FUHRMAN LEAMY
LAND GROUP
DESIGN • SERVICE • SOLUTIONS
3400 DOUGLAS BLVD, SUITE 275
ROSEVILLE, CALIFORNIA 95661
916.783.5263 • FLLANDGROUP.COM

JOB NO. :CRV: 25027

CITY OF ROSEVILLE APPROVAL

PROJECT:
JM-52 PARK

2097 MISTY RIDGE DRIVE
ROSEVILLE, CA

CLIENT:
CITY OF ROSEVILLE

REVISIONS DATE
1 2 3 4 5

ISSUE		DATE
1	1ST SUBMITTAL	9.05.2025
2	2ND SUBMITTAL	10.08.2025
3	3RD SUBMITTAL	11.21.2025
4		
5		

REGISTERED PROFESSIONAL ENGINEER — NATHAN A. HEARN — No. E 23927 — 3-31-2026 — ELECTRICAL — STATE OF CALIFORNIA
Date Signed: 11/18/25

DRAWN : JC
CHECKED : NH
SCALE: : AS SHOWN

SHEET TITLE:
TITLE 24
LTO FORMS

capital engineering
RANCHO CORDOVA, CALIFORNIA
NH - JC 250275.00
PM - DESIGN TEAM PROJECT NO.

SHEET
E0.3
27 OF 30 SHEETS

FUHRMAN LEAMY LAND GROUP HEREBY EXPRESSLY RESERVES ITS COMMON LAW COPYRIGHT AND OTHER PROPERTY RIGHTS IN THESE PLANS. THESE PLANS AND DRAWINGS ARE NOT TO BE REPRODUCED, CHANGED OR COPIED IN ANY FORM OR MANNER WHATSOEVER WITHOUT FIRST OBTAINING THE EXPRESS WRITTEN PERMISSION OF FUHRMAN LEAMY LAND GROUP, NOR ARE THEY TO BE ASSIGNED TO ANY THIRD PARTY WITHOUT FIRST OBTAINING WRITTEN PERMISSION AND CONSENT.

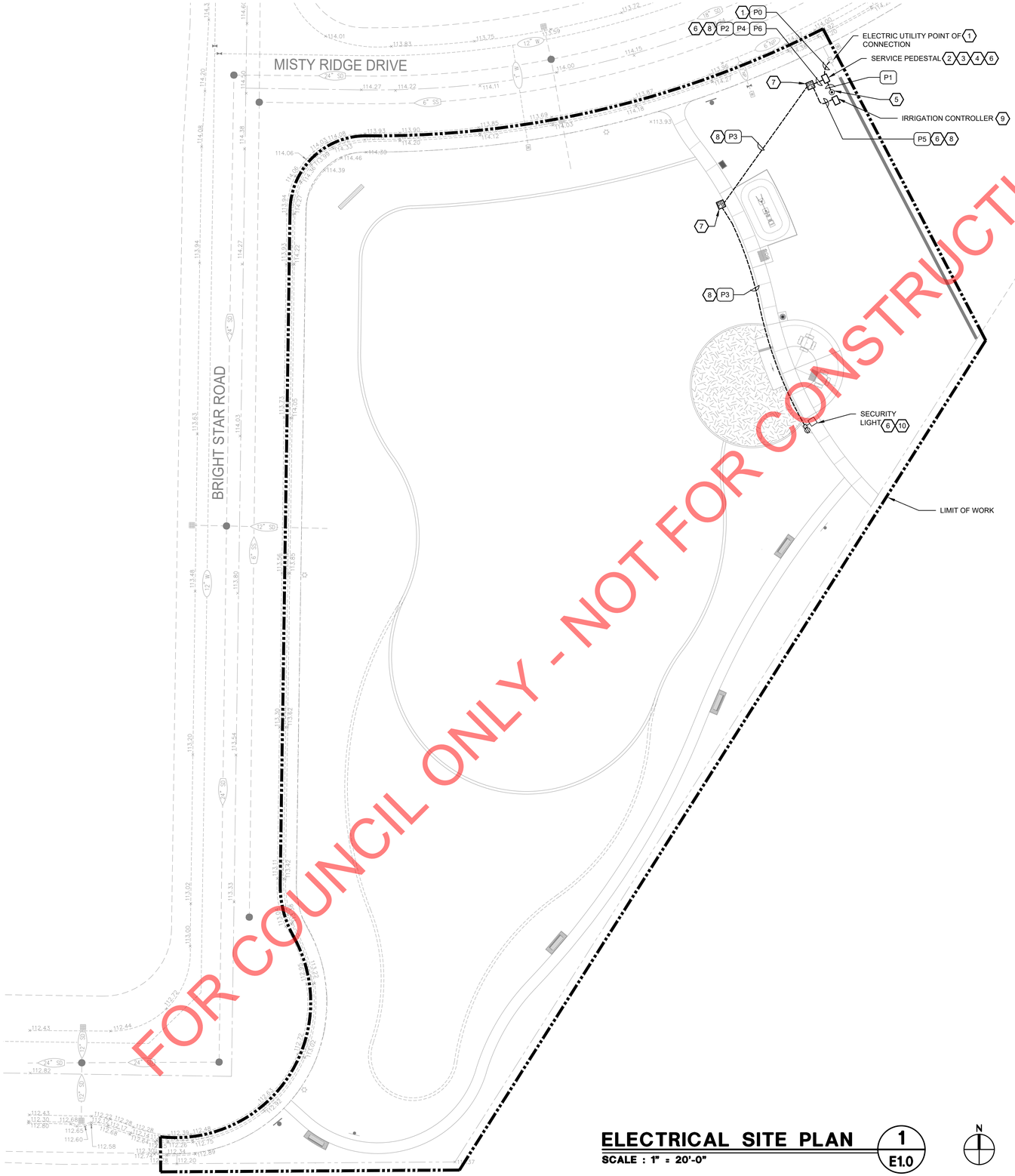

FOR COUNCIL ONLY - NOT FOR CONSTRUCTION

ELECTRICAL SITE PLAN 1 / E1.0

SCALE : 1" = 20'-0"

N

KEY NOTES:

1. UNDERGROUND ELECTRICAL UTILITY SERVICE CONDUIT, COORDINATE SERVICE, TRENCH REQUIREMENTS AND ROUTING WITH ELECTRICAL UTILITY COMPANY PRIOR TO INSTALLATION. REFER TO DRY UTILITIES DRAWING FOR ADDITIONAL INFORMATION. FOR INSTALLATION SEE TYPICAL SECONDARY SERVICE TRENCH DETAIL 4, SHT. E2.0.
2. UTILITY SERVICE PEDESTAL. FOR LAYOUT SEE ELEVATION ON SHEET E0.2. FOR CONNECTIONS SEE ONE-LINE DIAGRAM ON SHEET E0.2.
3. UTILITY SERVICE PEDESTAL CONCRETE PAD, FOR INSTALLATION SEE SERVICE PEDESTAL CONCRETE PAD DETAIL 8 ON SHEET E2.0.
4. UTILITY SERVICE PEDESTAL MOUNTING, FOR INSTALLATION SEE UTILITY SERVICE PEDESTAL MOUNTING DETAIL 7, SHT. E2.0.
5. UNDERGROUND CONCRETE GROUND ROD BOX, FOR INSTALLATION SEE TYPICAL CONCRETE GROUND ROD BOX DETAIL 3, SHT. E2.0.
6. CONDUIT STUB-UP. FOR INSTALLATION, SEE CONDUIT STUB-UP DETAIL 2, SHT. E2.0.
7. UNDERGROUND CONCRETE PULLBOX, FOR INSTALLATION SEE TYPICAL CONCRETE PULLBOX DETAIL 1, SHT. E2.0.
8. UNDERGROUND CONDUIT. FOR INSTALLATION SEE TYPICAL TRENCH DETAIL 5, SHT. E2.0.
9. IRRIGATION CONTROLLER. COORDINATE EXACT LOCATION AND CONNECTION REQUIREMENTS WITH LANDSCAPE CONTRACTOR. INSTALL AND CONNECT 5/8" x 8' GROUND ROD WITH #6 CU CONDUCTOR AT FOUNDATION PER MANUFACTURERS REQUIREMENTS. FOR INSTALLATION SEE IRRIGATION CONTROLLER DETAIL 6, SHT. E2.0.
10. CITY OF ROSEVILLE STANDARD AREA LIGHT POLE. FOR DESCRIPTION SEE LIGHTING FIXTURE SCHEDULE SHT. E2.1. FOR LIGHT POLE INSTALLATION SEE TYPICAL POLE MOUNTED AREA LIGHT DETAIL 1, SHT. E2.1.

FUHRMAN LEAMY
LAND GROUP
DESIGN • SERVICE • SOLUTIONS

3400 DOUGLAS BLVD, SUITE 275
ROSEVILLE, CALIFORNIA 95661
916.783.5263 • FLLANDGROUP.COM

JOB NO. :CRV: 25027

CITY OF ROSEVILLE APPROVAL

PROJECT:

JM-52 PARK

2097 MISTY RIDGE DRIVE
ROSEVILLE, CA

CLIENT:
CITY OF ROSEVILLE

REVISIONS	DATE
△	
△	
△	
△	

ISSUE		DATE
1	1ST SUBMITTAL	9.05.2025
2	2ND SUBMITTAL	10.08.2025
3	3RD SUBMITTAL	11.21.2025
4		
5		

REGISTERED PROFESSIONAL ENGINEER
NATHAN A. HEARN
No. E 23927
3-31-2026
ELECTRICAL
STATE OF CALIFORNIA

Date Signed: 11/18/25

DRAWN	:	JC
CHECKED	:	NH
SCALE:	:	AS SHOWN

SHEET TITLE:
ELECTRICAL SITE PLAN

SHEET
E1.0
28 OF 30 SHEETS

capital engineering
RANCHO CORDOVA, CALIFORNIA

NH - JC	250275.00
PM - DESIGN TEAM	PROJECT NO.

FURHMAN LEAMY LAND GROUP HEREBY EXPRESSLY RESERVES ITS COMMON LAW COPYRIGHT AND OTHER PROPERTY RIGHTS IN THESE PLANS. THESE PLANS AND DRAWINGS ARE NOT TO BE REPRODUCED, CHANGED OR COPIED IN ANY FORM OR MANNER WHATSOEVER WITHOUT FIRST OBTAINING THE EXPRESS WRITTEN PERMISSION OF FUHRMAN LEAMY LAND GROUP, NOR ARE THEY TO BE ASSIGNED TO ANY THIRD PARTY WITHOUT FIRST OBTAINING WRITTEN PERMISSION AND CONSENT.

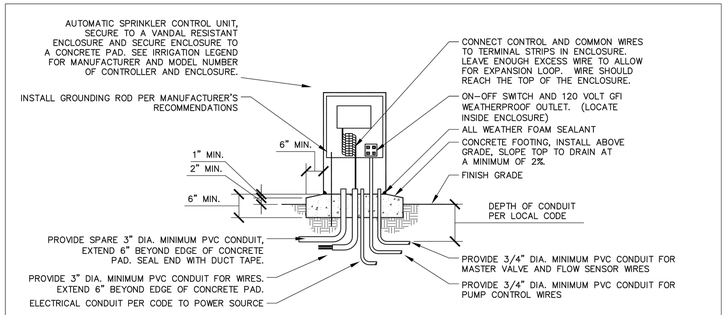

NOTES

1. COMMON WIRE TO BE WHITE & CONTROL WIRE TO BE RED IN COLOR. BUNDLE AND TAPE AT INTERVALS OF 10 FT. O. C.
2. NO SPLICES SHALL BE MADE BETWEEN CONTROLLER AND REMOTE CONTROL VALVES UNDER 500 LINEAL FEET.
3. ORDER WITH MANUFACTURER'S FACTORY FINISH STAINLESS STEEL.
4. INSULATE AROUND INSIDE BASE OF BOX WITH ALL WEATHER FOAM SEALANT.
5. GROUNDING ROD SHALL BE INSTALLED PER MANUFACTURER'S RECOMMENDATIONS..
6. GROUND TEST TO BE CONDUCTED AFTER INSTALLATION, NOT TO EXCEED 25 OHMS.
7. MASTER VALVE WIRE SHALL BE BLUE.
8. PROVIDE COLOR CODED MAP OF VALVE LOCATIONS.
9. EXTEND PAVING 24" AT FRONT OF CONTROLLER TO ALLOW FOR CLEAR ACCESS.

JILL GELLER, CPRE
PARKS, RECREATION & LIBRARIES DIRECTOR

CITY OF ROSEVILLE CALIFORNIA — PARKS, RECREATION, & LIBRARIES DEPARTMENT

CONTROLLER

SCALE: NONE
REVISED: JULY 2025
REVIEWED BY: T. GEE
APPROVED BY: J. GELLER

PK-IR-1

IRRIGATION CONTROLLER DETAIL

SCALE : NO SCALE

6 / E2.0

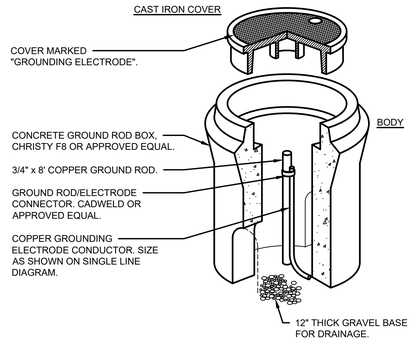

TYPICAL CONCRETE GROUND ROD BOX DETAIL

SCALE : NO SCALE

3 / E2.0

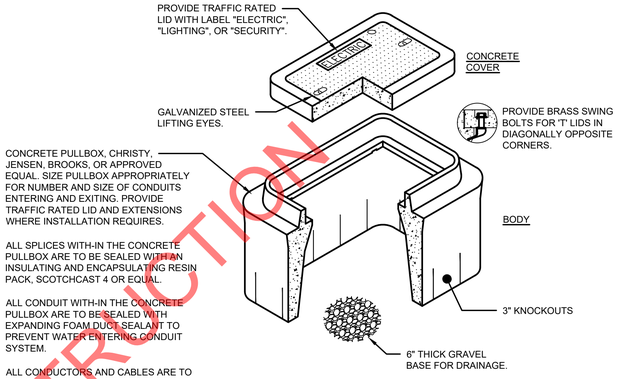

TYPICAL CONCRETE PULLBOX DETAIL

SCALE : NO SCALE

1 / E2.0

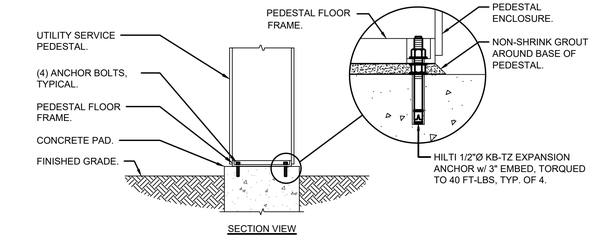

SECTION VIEW

UTILITY SERVICE PEDESTAL MOUNTING DETAIL

SCALE : NO SCALE

7 / E2.0

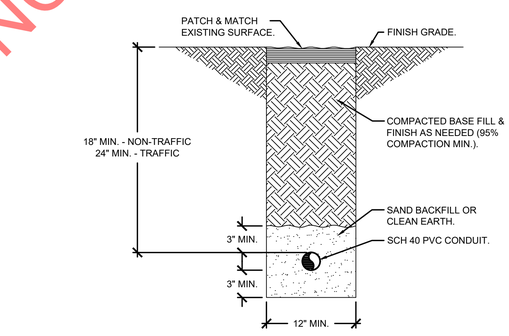

TYPICAL SECONDARY SERVICE TRENCH DETAIL

SCALE : NO SCALE

4 / E2.0

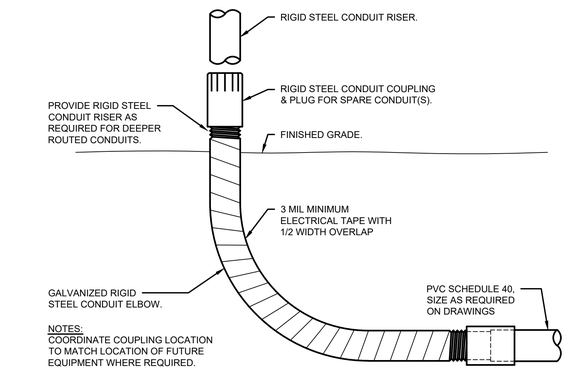

NOTES:
COORDINATE COUPLING LOCATION TO MATCH LOCATION OF FUTURE EQUIPMENT WHERE REQUIRED.

CONDUIT STUB-UP DETAIL

SCALE : NO SCALE

2 / E2.0

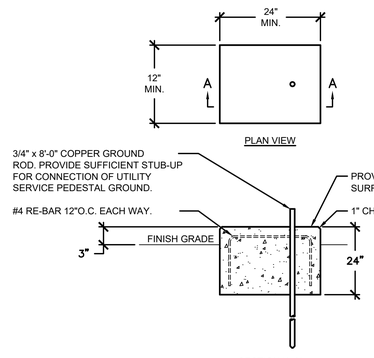

SECTION 'A-A'

NOTES:

1. EQUIPMENT BASE TOP SHALL BE LEVEL.
2. PRIOR TO EQUIPMENT BASE INSTALLATION, COMPACT SOIL UNDER THE BASE TO 95% RELATIVE COMPACTION.
3. CONCRETE COMPRESSIVE STRENGTH, 3000 PSI IN 28 DAYS.

UTILITY SERVICE PEDESTAL CONCRETE PAD DETAIL

SCALE : NO SCALE

8 / E2.0

TYPICAL TRENCH DETAIL

SCALE : NO SCALE

5 / E2.0

NOT FOR CONSTRUCTION
NOT FOR COUNCIL ONLY - NOT

FUHRMAN LEAMY
LAND GROUP
DESIGN • SERVICE • SOLUTIONS

3400 DOUGLAS BLVD, SUITE 275
ROSEVILLE, CALIFORNIA 95661
916.783.5263 • FLLANDGROUP.COM

JOB NO. :CRV: 25027

CITY OF ROSEVILLE APPROVAL

PROJECT:

JM-52 PARK

2097 MISTY RIDGE DRIVE
ROSEVILLE, CA

CLIENT:
CITY OF ROSEVILLE

REVISIONS	DATE
△	
△	
△	
△	

ISSUE		DATE
1	1ST SUBMITTAL	9.05.2025
2	2ND SUBMITTAL	10.08.2025
3	3RD SUBMITTAL	11.21.2025
4		
5		

REGISTERED PROFESSIONAL ENGINEER
NATHAN A. HEARN
No. E 23927
3-31-2026
ELECTRICAL
STATE OF CALIFORNIA

Date Signed: 11/18/25

DRAWN	:	JC
CHECKED	:	NH
SCALE:	:	AS SHOWN

SHEET TITLE:
ELECTRICAL DETAILS

capital engineering
RANCHO CORDOVA, CALIFORNIA

NH - JC — PM - DESIGN TEAM
250275.00 — PROJECT NO.

SHEET
E2.0
29 OF 30 SHEETS

FUHRMAN LEAMY LAND GROUP HEREBY EXPRESSLY RESERVES ITS COMMON LAW COPYRIGHT AND OTHER PROPERTY RIGHTS IN THESE PLANS. THESE PLANS AND DRAWINGS ARE NOT TO BE REPRODUCED, CHANGED OR COPIED IN ANY FORM OR MANNER WHATSOEVER WITHOUT FIRST OBTAINING THE EXPRESS WRITTEN PERMISSION OF FUHRMAN LEAMY LAND GROUP, NOR ARE THEY TO BE ASSIGNED TO ANY THIRD PARTY WITHOUT FIRST OBTAINING WRITTEN PERMISSION AND CONSENT.

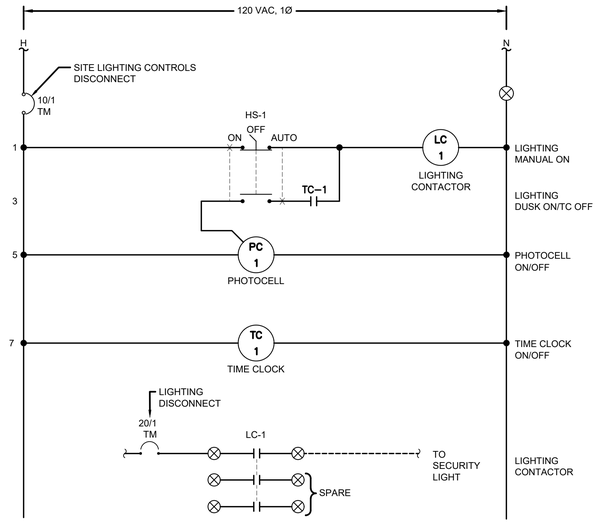

LCC EQUIPMENT LIST		
TAG	EQUIPMENT	MANUFACTURER/MODEL
PC-1	PHOTOCELL	INTERMATIC / K 4136M OR EQUAL
TC-1	TIMECLOCK	TORK / DWZ100B OR EQUAL
HS-1	SELECTOR SWITCH (3-POSITION)	SQUARE D / CLASS 9001K OR EQUAL
LC-1	LIGHTING CONTACTOR (3-POLE, 30 AMP)	SQUARE D / CLASS 8903, TYPE L OR EQUAL
CB-1	MINATURE CIRCUIT BREAKER (10 AMP, 120 VAC)	SQUARE D / QOB OR EQUAL

LIGHTING CONTROLS WIRING DIAGRAM

2 / E2.1

SCALE : NO SCALE

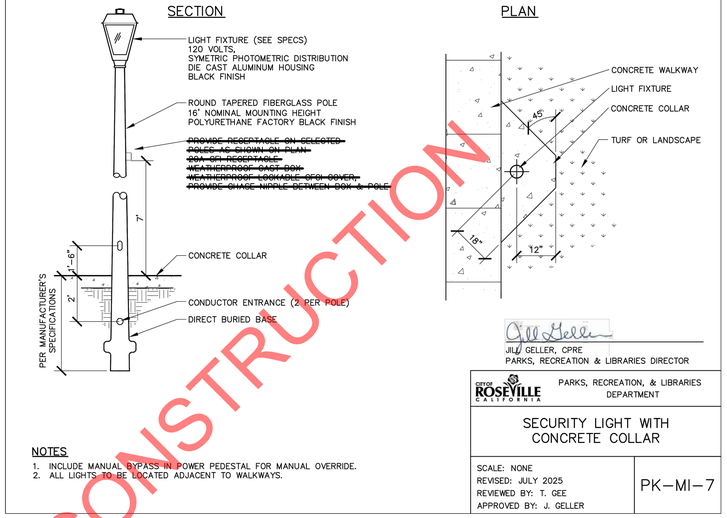

NOTES

1. INCLUDE MANUAL BYPASS IN POWER PEDESTAL FOR MANUAL OVERRIDE.
2. ALL LIGHTS TO BE LOCATED ADJACENT TO WALKWAYS.

Jill Geller
JILL GELLER, CPRE
PARKS, RECREATION & LIBRARIES DIRECTOR

CITY OF ROSEVILLE CALIFORNIA — PARKS, RECREATION, & LIBRARIES DEPARTMENT

SECURITY LIGHT WITH CONCRETE COLLAR

SCALE: NONE
REVISED: JULY 2025
REVIEWED BY: T. GEE
APPROVED BY: J. GELLER

PK-MI-7

TYPICAL POLE MOUNTED AREA LIGHT DETAIL

1 / E2.1

SCALE : NO SCALE

LIGHTING FIXTURE SCHEDULE

TAG	DESCRIPTION	MANUFACTURER	LAMPS	WATTS	COLOR	MOUNTING	NOTES
A	POST TOP REFRACTIVE GLOBE	HADCO RL54 B B N N 1 A W N N N A 2 N N N N SP1	LED	39	BLACK	POLE	1

NOTES:

1 POLE: WHATLEY #TR34 16 DE BLK TXT 30 (DIRECT BURIAL)

GENERAL NOTES:

A. THIS LIGHTING SCHEDULE IS NOT COMPLETE WITHOUT A COPY OF THE PROJECT MANUAL CONTAINING ELECTRICAL SPECIFICATIONS.

B. SPECIFIED MANUFACTURERS ARE APPROVED TO SUBMIT BID. INCLUSION DOES NOT RELIEVE MANUFACTURER FROM SUPPLYING PRODUCT AS DESCRIBED.

C. PROVIDE SUBMITTALS THAT INCLUDE LIGHTING FIXTURE, LED, AND DRIVER INFORMATION FOR EACH FIXTURE, WITH APPLICABLE OPTIONS CLEARLY CHECKED OR HIGHLIGHTED. SUBMITTALS NOT INCLUDING THIS INFORMATION WILL BE RETURNED AS REJECTED BY THE ENGINEER OF RECORD.

D. PROVIDE COMMISSIONING OF THE LIGHTING AND LIGHTING CONTROLS IN ACCORDANCE WITH CALIFORNIA TITLE 24 COMMISSIONING REQUIREMENTS.

FOR COUNCIL ONLY NOT FOR CONSTRUCTION

capital engineering
RANCHO CORDOVA, CALIFORNIA
NH - JC — PM - DESIGN TEAM
250275.00 — PROJECT NO.

FUHRMAN LEAMY
LAND GROUP
DESIGN • SERVICE • SOLUTIONS
3400 DOUGLAS BLVD, SUITE 275
ROSEVILLE, CALIFORNIA 95661
916.783.5263 • FLLANDGROUP.COM

JOB NO. :CRV: 25027

CITY OF ROSEVILLE APPROVAL

PROJECT:
JM-52 PARK

2097 MISTY RIDGE DRIVE
ROSEVILLE, CA

CLIENT:
CITY OF ROSEVILLE

REVISIONS	DATE
△	
△	
△	
△	

ISSUE		DATE
1	1ST SUBMITTAL	9.05.2025
2	2ND SUBMITTAL	10.08.2025
3	3RD SUBMITTAL	11.21.2025
4		
5		

REGISTERED PROFESSIONAL ENGINEER
NATHAN A. HEARN
No. E 23927
3-31-2026
ELECTRICAL
STATE OF CALIFORNIA

Date Signed: 11/18/25

DRAWN : JC
CHECKED : NH
SCALE: : AS SHOWN

SHEET TITLE:
ELECTRICAL DETAILS

SHEET
E2.1
30 OF 30 SHEETS

City Council Communication

Meeting Date: 3/4/2026
Item #: VII.16
File #: 0704-01-01
Item ID: 2026-121

Title:	CO-61 Park Project - Approval of Plans and Specifications and Authorize Staff to Call for Bids
Contact:	Joel De Jong 916-774-5924 jdejong@roseville.ca.us

SUMMARY

Staff recommends approval of plans and specifications for the CO-61 Park Project and authorize staff to call for bids. The project scope includes grading and utilities, a playground, picnic area, walking paths, turf area, planting and irrigation. The project is estimated to cost $1,395,000 and will be funded by the Campus Oaks Neighborhood Park Fund.

RECOMMENDATION

Staff recommends that the City Council approve plans and specifications for the CO-61 Park Project and authorize staff to call for bids.

BACKGROUND

CO-61 Park is a 5.7-acre neighborhood park located at Ashbrook St and Knightsbridge in Campus Oaks. This park backs up to an open space area. The master plan for this park was approved by the City Council on June 18, 2025. Amenities planned for the park include a playground, picnic area, walking paths, turf area, planting and irrigation. Additive alternates have been identified for budget purposes to allow for "menu style" bidding, and include a swing set, a half-court basketball court, a shade structure over the picnic area, additional turf and irrigation, a paved bike trail, and a shade structure over the play area. Bids are scheduled to be opened later in March 2026. Staff plans to return to Council in May to seek approval to award the project.

The architect's estimate for construction for the base bid is $1,395,000.

FISCAL IMPACT

Funding for construction of this park was included in the FY2025-26 budget for construction through the Neighborhood Park - Campus Oaks Fund. Maintenance will be funded by the HP Campus Oaks Community Facilities District No. 2 (Public Services). Maintenance costs will be approximately $16,000/acre/year and will be funded by the HP Campus Oaks Community Facilities District No. 2 (Public Services). There will be no General Fund impact.

ENVIRONMENTAL REVIEW

CEQA compliance for development of the CO-61 Neighborhood Park project site was originally achieved in February 1996 with adoption of the Hewlitt-Packard Master Plan EIR (SCH No. 95112022). An Addendum to the original Hewlitt-Packard Master Plan EIR was prepared on July 6, 2015 to provide CEQA compliance for the Campus Oaks Master Plan, consistent with CEQA Guidelines § 15164. The Campus Oaks Master Plan approved land uses changes to 375.73 acres within the western portion of the Hewlitt-Packard Master Plan area from Light Industrial and Open Space to a mix of Residential, Community

Commercial, Light Industrial, Business Professional, Tech/Business Park, Open Space, Parks & Recreation, Paseo, and Public land uses. The plan included 19.29 acres of parks, including approximately 6 acres for at neighborhood park to be located on Parcel CO-61.

According to CEQA, an Addendum to an adopted EIR can be prepared to address minor technical changes or project modifications (CEQA Guidelines § 15164). An Addendum is appropriate only if these minor technical changes or modifications do not result in any new significant impacts or a substantial increase in the severity of previously identified significant impacts. The Addendum need not be circulated for public review (CEQA Guidelines § 15164 [c]); however, the Addendum is to be considered along with the adopted Initial Study/Mitigated Negative Declaration, or Initial Study/Negative Declaration or EIR by the decision making body prior to making a decision on the project (CEQA Guidelines § 15164 [d]). It should also be noted that the Campus Oaks Master Plan Addendum was circulated for formal public review in 2015 despite it not being required and that the CO-61 Neighborhood Park Master Plan was also distributed for public review in May 2025.

The proposed CO-61 Neighborhood Park Master Plan is consistent with the Campus Oaks Master Plan and the Addendum to the Hewlitt-Packard Master Plan EIR. The Addendum demonstrates that the environmental analysis, impacts, and mitigation measures identified in the original February 1996 EIR remain substantively unchanged and supports the finding that the proposed project does not raise any new issues and does not exceed the level of impacts identified in the previous EIR. Because the project is consistent with the Campus Oaks Master Plan, no new effects would be expected to occur and all applicable mitigation measures from the Hewlitt-Packard Master Plan EIR will be implemented through the development of the CO-61 Neighborhood Park. Because the proposed project meets the requirements identified in Section 15164 of the State CEQA Guidelines, no additional CEQA review is required.

CITY COUNCIL STRATEGIC PLAN/OVERARCHING GOALS

1. Ensure a safe and healthy community
2. Remain fiscally responsible in a changing world
4. Invest in well-planned infrastructure and growth
6. Deliver exceptional City services

Respectfully Submitted,
Joel De Jong, Park Development Project Manager

Jill Geller, Parks Recreation and Libraries Director

ATTACHMENTS:

1. Vicinity Map
2. Project Manual
3. Plans

REVIEWERS:

Joel De Jong, Parks, Recreation, and Libraries Department - Park Development	Created/Initiated - 2/11/2026
Tara Gee, Parks, Recreation, and Libraries Department - Park Development	Approved - 2/11/2026

Jill Geller, Parks, Recreation, and Libraries - All	Approved - 2/13/2026
Kelly Aye, City Attorney Department	Approved - 2/17/2026
Katrina Six, City Clerk Department	Approved - 2/17/2026
Ryan DeVore, City Manager Department - Assistant City Manager	Approved - 2/17/2026
Dennis Kauffman, City Manager Department - Assistant City Manager	Approved - 2/17/2026
Michelle Sheidenberger, City Attorney Department	Approved - 2/18/2026
Dominick Casey, City Manager Department - City Manager	Approved - 2/18/2026
Katrina Six, City Clerk Department	Final Approval - 2/18/2026

CO-61 PARK
VICINITY MAP

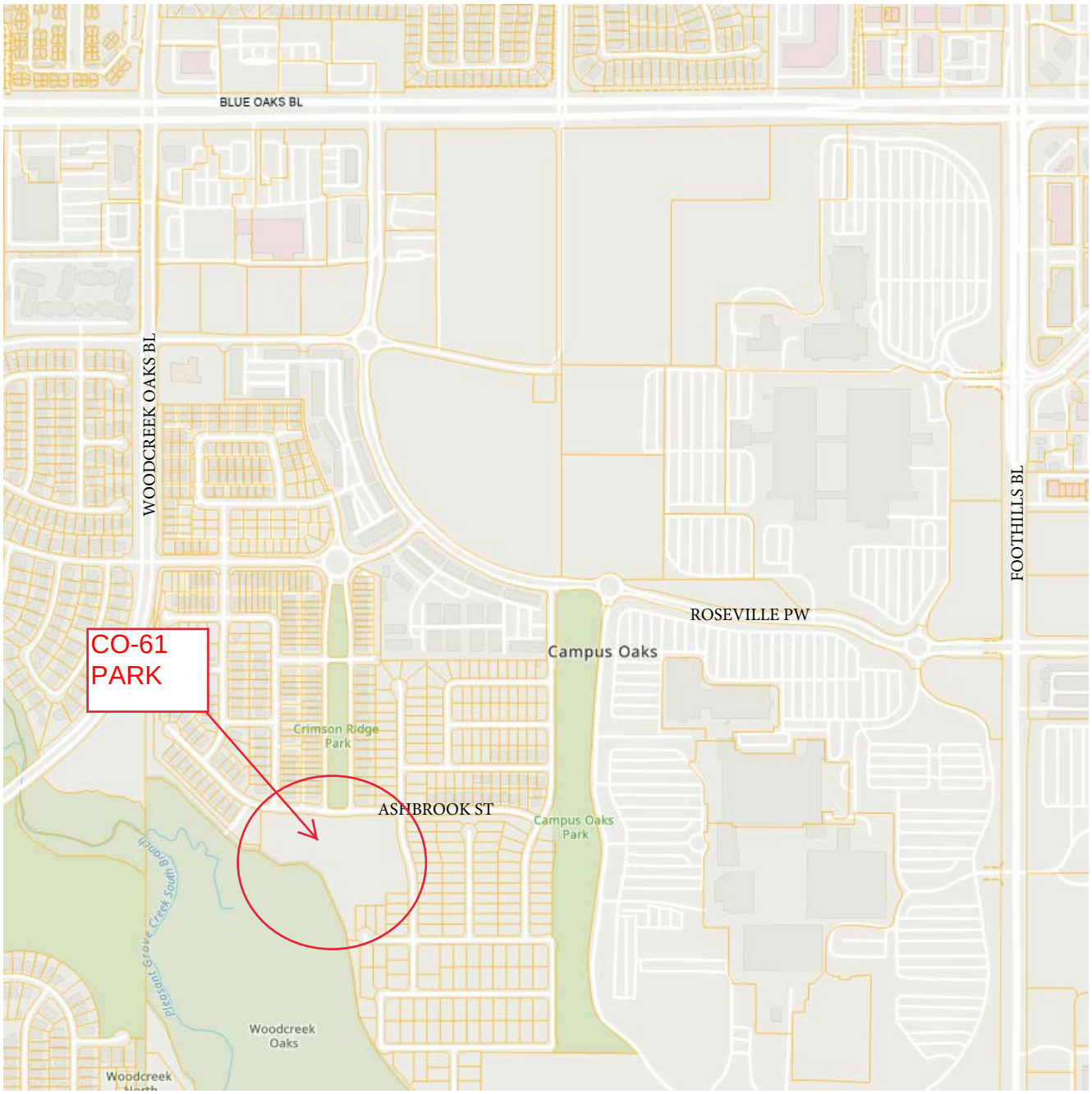



Project Manual for the

CO-61 Park Project

FOR COUNCIL APPROVAL ONLY

March 2026

The latest edition of the City of Roseville Parks Construction Standards are incorporated by reference as a part of this Project Manual. The Parks Construction Standards can be purchased at the address listed below.

Parks, Recreation & Libraries
316 Vernon Street, Suite 400
Roseville, California 95678
www.roseville.ca.us

CITY OF ROSEVILLE CALIFORNIA

Parks, Recreation & Libraries
Park Development
316 Vernon Street, Suite 400
Roseville, California 95678

Notice to Bidders

DATE: March 5, 2026

TO: Prospective Bidders

FROM: Joel De Jong, Park Development Project Manager

RE: CO-61 Park Project

Project Description: The City of Roseville is now accepting bid proposals for the CO-61 Park Project from **pre-qualified** Prime Contractors. The scope of work for the base bid includes, but is not limited to, grading and utilities, a playground, picnic area, walking paths, turf area, planting and irrigation. Additive alternates include a swing set with containment and seating, a half-court basketball court, a shade structure over the picnic area, additional turf and irrigation, a paved bike trail, and a shade structure over the play area.

Prime Contractors: At this time, this project is only available for bidding by Prime Contractors listed on the City of Roseville Parks, Recreation and Libraries 2026 Pre-Qualified Contractor List. Please see attached Pre-Qualified Prime Contractors memo for more information.

Subcontractors: The City reserves the right to conduct a post-bid qualifications review of any subcontractors if deemed necessary.

Contract Documents: A Project Manual, including all Contract Documents and the Proposal forms for bidding this project, may be obtained online from the City of Roseville's website at www.roseville.ca.us/business/procurement_services/bids_rfps. Potential bidders are advised to obtain all documents and specifications related to this project directly from the City of Roseville / Public Purchase. The City of Roseville does not guarantee the accuracy of any forms, plans, or project manuals obtained through outside sources other than the City of Roseville. Furthermore, the City does not guarantee the distribution of any addendums or the accuracy of their content if obtained from a third party.

Engineer's Estimate: The engineer's estimate for construction of the base bid items is $1,395,000.

Questions: The deadline for submission of questions and clarifications regarding the Contract Documents is Monday, March 23, 2026 at 5:00 p.m. In order to meet the required timeline to issue addenda, questions will not be accepted after this date. Only Addenda issued by the City are binding. All questions shall be directed to the attention of Joel De Jong either via e-mail at jdejong@roseville.ca.us, or Public Purchase at https://roseville.ca.us/rfp.

Pre-Bid Conference: There is NO pre-bid conference for this project.

Bid Deadline: Proposals will be received at the Office of the City Clerk, 311 Vernon Street, Roseville, California, until 3:00 p.m. on Tuesday, March 31, 2026. The proposals will be publicly opened and read by the City Clerk or designee of the City of Roseville in the City Clerk's Office at 3:05 p.m. on that same day.

The July 2025 edition of the City of Roseville Parks Construction Standards will be applicable to this project. The successful bidder will be required to use the standards contained in the book for the construction of this project.

FOR COUNCIL APPROVAL ONLY

Parks, Recreation & Libraries
Park Development
316 Vernon Street, Suite 400
Roseville CA 95678

To the successful bidder:

In order to move forward with the award of this project, the City of Roseville requests that you submit the following documents:

1. Please return two, original signed agreements OR a PDF of original signatures if unable to get originals. Corporations require two corporate signatures –OR- one corporate signature and a corporate seal. For a listing of accepted signatures, please see below *.

   * In accordance with Section 313 of the California Corporations Code, any document executed by a corporation requires the signature from at least one person from EACH of the following two groups:

GROUP ONE	GROUP TWO
Chairman of the Board	Secretary
President	Assistant Secretary
Vice President	Chief Financial Officer
	Assistant Treasurer

   If an officer holds a title in each of the above groups (dual title), that officer may sign for each of the two groups by two separate signatures with the appropriate title listed with his or her signature.

   There are also two exceptions whereby we would accept only one signature:
   - One corporate signature AND a corporate seal
     -OR-
   - They are able to provide a current resolution from their Board of Directors, stating that a particular person has the sole authority to bind the corporation.

2. Public Works Faithful Performance Bond – fully executed and notarized.

3. Public Works Labor and Materials Payment Bond – fully executed and notarized.

4. Insurance - fully executed and notarized.

We request that all documents be received by April 10, 2026.

The Parks, Recreation & Libraries Department requires submittal of all of the above executed documents prior to City Council bid award.

FOR COUNCIL APPROVAL ONLY

916.774.5505 phone
916.774.5251 fax
www.roseville.ca.us

TABLE OF CONTENTS

	Pagination Notation
Notice to Contractors	NTC
Instructions to Bidders	INT
Proposal	PROP
Insurance Broker Information Packet	INS
General Conditions for Buildings and Grounds	GC
Supplemental Conditions	SC
Specifications	SPEC
Drawings	DRAW
Assembly Bill No. 626	AB 626

FOR COUNCIL APPROVAL ONLY

CITY OF ROSEVILLE

DEPARTMENT OF Parks, Recreation & Libraries

Name of Project: CO-61 Park Project

NOTICE TO CONTRACTORS

NOTICE IS HEREBY GIVEN THAT sealed Proposals will be received at the Office of the City Clerk, 311 Vernon Street, Roseville, California, until March 31, 2026 at 3:00 p.m. Late Proposals will be rejected. No exceptions.

The Proposals will be publicly opened and read by the City Clerk or designee of the City of Roseville at 3:05 p.m. on Tuesday, March 31, 20 26 at the Office of the City Clerk located at 311 Vernon Street, Roseville California for the following project:

CO-61Park Project.

A pre-bid meeting will be held at N/A- No Pre-bid .

A Project Manual, including all Contract Documents and the Proposal forms for bidding this project, may be obtained on-line from the City of Roseville's website at https://www.roseville.ca.us/business/procurement_services/bids_rfps. All communications relative to this project shall be conducted through Public Purchase.

Bids shall be submitted on the City's Proposal Forms included in the Project Manual, plainly endorsed with the Bidder's name together with signed acknowledgement of any and all addenda. Proposal Forms shall be securely sealed in a suitable envelope marked with the name and address of the Bidder, and marked in capital letters on the front and back of the envelope as

FOR COUNCIL APPROVAL ONLY

follows:

[NAME OF PROJECT]

(Name of Bidder)

(Address of Bidder)

Whether mailed or personally delivered, all bids shall be addressed to the City of Roseville, Office of the City Clerk, 311 Vernon Street, Roseville, California, 95678.

Each bid must be accompanied by a Bid Guaranty in the form of a Certificate of Deposit, Certified or Cashier's Check, Bidder's Bond or Irrevocable Standby Letter of Credit in an amount equal to at least ten percent (10%) of the Bidder's Grand Total Price. The Bid Guaranty will be retained by the City and applied to any and all damages sustained by the City in the event that the successful Bidder fails or refuses to enter into the Contract awarded to it and to furnish all required bonds and Certificates of Insurance. The City intends to award the Contract to the lowest responsible Bidder based on the Grand Total Bid Price for all components of the Project. To the extent allowed by law, the City reserves the right to reject any and all bids and/or to waive any irregularities or informalities in any bid or in the bidding procedure. The City specifically reserves the right to not award the Contract after the opening of bids.

Any bid may be withdrawn at any time prior to the time fixed in the public notice for the deadline submission of bids only by written request for the withdrawal of the bid filed with the City Clerk. The request shall be executed by the Bidder or his or her duly authorized representative. The withdrawal of a bid does not prejudice the right of the Bidder to file a new bid by the submission deadline. Whether or not bids are opened exactly at the time fixed in the public notice for opening bids, a bid will not be received after the deadline submission of bids

FOR COUNCIL APPROVAL ONLY

nor may any bid be withdrawn after the time fixed in the public notice for deadline for submission of bids. Immediately following the deadline for submission of bids all bids shall become the property of the City of Roseville and the City is under no obligation to return bids.

Bids will be examined and reported to the City Council within sixty (60) business days after the bid opening. Except as permitted by applicable law, no Bidder may withdraw its bid for a period of sixty (60) business days after the date of bid opening. Each Bidder will be notified of any award of the Contract by the City.

The City will affirmatively ensure non-discrimination on the basis of one or more of the following: race, religious creed, color, national origin, ancestry, physical disability, mental disability, medical condition, genetic information, marital status, sex, age, sexual orientation, or military and veteran status in the award and administration of contracts that it awards.

Pursuant to Public Contract Code Section 22300, the successful Bidder may submit certain securities in lieu of the City withholding retention of payments during the Project.

The City has determined that the Contractor shall possess a valid Class A, B or C-27 Contractor's license at the time that the bid is submitted, as well as any other license classification as may be required by the laws of the California for the performance of the work specified in the Contract Documents. Said license shall be maintained during the Contract period. Failure to possess the specified license shall render the bid nonresponsive and will act as a bar to the award of the Contract to any Bidder not possessing such a license at the time of bid submittal. The Contractor shall provide certification of the license, its number and the expiration date on the proposal form.

The work is to be done in Placer County. Pursuant to California Labor Code Section 1773, the City has ascertained the General Prevailing Rate of Wages in the County in which the

FOR COUNCIL APPROVAL ONLY

work is to be done to be as determined by the Director of Industrial Relations of the State of California. The Contractor is hereby made aware that information regarding prevailing wage rates may be obtained from the State Department of Industrial Relations and/or the following website address: http://www.dir.ca.gov/dlsr/DPreWageDetermination.htm. The Contractor is required to post a copy of the applicable wage rates at the job site. Attention is directed to Section 5 "Legal Relations and Responsibility" of the General Conditions.

Pursuant to Labor Code Section 1771.1(b), notice is hereby given that a contractor or subcontractor shall not be qualified to bid on, be listed in a bid proposal, subject to the requirements of Section 4104 of the Public Contract Code, or engage in the performance of any contract for public work, as defined in Labor Code Sections 1720, et seq., unless currently registered and qualified to perform public work pursuant to Labor Code Section 1725.5 or exempt from registration requirements pursuant to Labor Code Section 1725.5(f). It is not a violation of Labor Code Section 1771.1 for an unregistered contractor to submit a bid that is authorized by Section 7029.1 of the Business and Professions Code or by Section 10164 or 20103.5 of the Public Contract Code, provided the contractor is registered to perform work pursuant to Labor Code Section 1725.5 at the time the contract is awarded or is exempt from registration requirements pursuant to Labor Code Section 1725.5(f). The Contractor is hereby notified that this project is subject to compliance monitoring and enforcement by the Department of Industrial Relations.

Vehicles with a GVWR greater than 8,500 lbs. and light – duty package delivery vehicles operated in California may be subject to the California Air Resources Board Advanced Clean Fleets regulations. Such vehicles may therefore be subject to requirements to reduce emissions and air pollutants. For more information, please visit the CARB Advanced Clean Fleets

FOR COUNCIL APPROVAL ONLY

webpage at https://ww2.arb.ca.gov/our-work/programs/advanced-clean-fleets. In addition, certain off-road diesel vehicles may be subject to the CARB In-Use Off-Road Diesel-Fueled Fleets Regulation. For more information, please visit the CARB In-Use Off-Road Diesel-Fueled Fleets Regulation webpage at https://ww2.arb.ca.gov/our-work/programs/use-road-diesel-fueled-fleets-regulation.

All questions prior to the deadline for bid submissions shall be directed to the attention of Joel De Jong via Public Purchase Q&A at www.publicpurchase.com or, via email at jdejong@roseville.ca.us. The deadline for submissions of questions and clarifications regarding the Contract Documents is 8 calendar days before the deadline for bid submissions. Only Addenda issued by the City are binding.

_____
City Clerk, City of Roseville

Dated: _____

Published: _____

FOR COUNCIL APPROVAL ONLY

INSTRUCTIONS TO BIDDERS

SECTION 1. GENERAL

1-1.01 **GENERAL.** These Instructions to Bidders form a part of the Contract Documents. Capitalized terms are defined in the General Conditions Section 1.

1-1.02 **EXAMINATION OF PLANS, CONTRACT DOCUMENTS AND SITE OF THE WORK.** The Bidder shall examine carefully the site of the Work and all the Contract Documents, including these Instructions to Bidders, and shall inform itself of the conditions relating to the execution of the Work. Failure to do so will not relieve the successful Bidder of its obligation to enter into an Agreement and complete the Work in strict accordance with the Contract Documents. Conditions relating to the execution of the Work include the requirements of federal, state, and local laws, statutes and ordinances relative to the execution of Work, including, but not limited to, applicable regulations concerning prevailing wage rates, non-discrimination in the employment of labor, protection of the public, employee health and safety, and environmental protection.

The submission of a bid shall be conclusive evidence that the Bidder has investigated and is satisfied as to the conditions to be encountered, as to the character, quality, and scope of Work to be performed, the quantities of materials to be furnished, and as to the requirements of all the Contract Documents.

1-1.03 **EXISTING INFORMATION.** Where the Department has made investigations of site conditions, including subsurface conditions in areas where Work is to be performed under the Contract, such investigations are made only for the purpose of study and design. City does not represent that such conditions as found in these investigations or inferences or conclusions drawn as a result of these investigations will represent actual site

FOR COUNCIL APPROVAL ONLY

conditions and hereby disclaims any liability as a result of Contractor's or Bidder's reliance on such investigations. City will presume that all Bidders have conducted their own site investigations, including investigations of subsurface conditions. Where such investigations have been made, Bidders or Contractors may, upon written request, inspect the records of the Department as to such investigations subject to the conditions set forth in these Instructions to Bidders. Such inspection of records may be made only at the location noted above. The records of such investigations are not a part of the Contract Documents and are shown solely for the convenience of the Bidder or Contractor. The City assumes no responsibility whatsoever with respect to the sufficiency or accuracy of the investigations made, the records thereof, or of the interpretations set forth therein or made by the City in its use thereof. The City makes no warranty or guarantee, either express or implied, that the conditions indicated by such investigations or records are representative of those existing throughout such areas, or any part thereof, or that unforeseen developments may not occur, or that materials other than, or in proportions different from those indicated, may not be encountered.

No information derived from such inspection of records of investigations or compilation thereof made by the City, the Department or from the Engineer, or his or her assistants, will in any way relieve the Bidder or Contractor from properly examining the site and making such additional investigations as it may elect, or from properly fulfilling the terms of the Contract.

FOR COUNCIL APPROVAL ONLY

SECTION 2: BID REQUIREMENTS

2-1.01 **PROPOSAL FORMS.** The Department will furnish to each Bidder standard Proposal Forms, which, when filled out and executed may be submitted as the bid. Proposals shall include all pages in the Project Manual with page numbers marked "PROP" plus the Addendum acknowledgment form (front sheet) from all Addenda received by the Bidder. Proposals shall be removed from the Project Manual. The full Project Manual shall not be submitted with the proposal. Bids not presented on forms so furnished will be disregarded.

The Proposal and one (1) copy thereof shall be submitted as directed in the "Notice to Contractors" under sealed cover plainly marked as a Proposal, and identifying the project to which the Proposal relates and the date of the bid opening therefor. Proposals which are not properly marked may be disregarded.

All blank spaces in the Proposal must be completed, as required, in ink. All price information shall be shown, clearly legible, in figures where required.

The Bidder shall sign the Proposal in the blank space provided therefor. If the Bidder is the sole owner, the Proposal shall be signed by the owner. If the Bidder is a corporation, the legal name of the corporation and its State of incorporation shall be set forth and the Proposal shall be signed by at least two officers authorized to sign contracts on behalf of the corporation. If the Bidder is a partnership, the true name of the firm shall be set forth, the names and addresses of all partners shall be given and the Proposal shall be signed by a partner in the firm authorized to sign contracts on behalf of the partnership. If the Bidder is a joint venture, the Proposal shall be signed on behalf of each participating company by officers or other individuals who have the full and proper authorization to do so. If the Proposal is signed by an agent of the Bidder other than an officer of a corporation or a member of a partnership, a notarized Power of

FOR COUNCIL APPROVAL ONLY

Attorney must be on file with the City prior to opening of bids or must be submitted with the Proposal. If requested by the City, the Bidder shall promptly submit evidence satisfactory to the City of the authority of the person signing the Proposal.

2-1.02 **SUBMISSION OF BIDS.** Bids must be submitted at the prescribed time and location specified in the Notice to Contractors. Any submission received after the prescribed time shall be rejected, regardless of whether or not bids are opened exactly at the prescribed time.

Any unauthorized conditions or qualifications entered on, or changes made to, the Proposal may render it invalid and may cause its rejection.

No telegraphic, telephonic, or facsimile or other electronically transmitted bids will be considered.

2-1.03 **REQUIRED LISTING OF PROPOSED SUBCONTRACTORS.** Each Proposal shall list the name, address and Contractor license number of each Subcontractor to whom the Bidder proposes to subcontract portions of the Work in an amount in excess of one-half of one percent (0.5%) of its total bid, in accordance with Section 4100 to 4114, inclusive, of the Public Contract Code for the State of California. The Bidder shall list the Subcontractor's license number and the portion of the Work that will be done by each Subcontractor. If the Bidder fails to specify a Subcontractor for any portion of the Work, the Bidder agrees to perform that portion of the Work itself, and represents that it is qualified to perform that portion of the Work itself. The Bidder's attention is invited to other provisions of the Public Contract Code related to the imposition of penalties for a failure to observe its provisions by using unauthorized Subcontractors or by making unauthorized substitutions.

2-1.04 **CONTRACTOR'S LICENSING LAWS.** Attention is directed to the

FOR COUNCIL APPROVAL ONLY

provisions of Business and Professions Code Chapter 9 of Division 3 concerning the licensing of Contractors.

All Bidders at the time of bid submittal shall be licensed as Contractors in accordance with the laws of this State. Any Bidder or Contractor not so licensed is subject to the penalties imposed by such laws. The form of Contractor's license required is stated in the Notice to Contractors, provided that the City makes no representation as to whether the State may require other or additional licenses. It is the Bidder's and Contractor's responsibility to obtain the correct Contractor's licenses. Bidders shall be skilled and regularly engaged in the general class or type of Work called for under this Contract.

All Bidders and Contractors, including Subcontractors, shall have a current City business license before undertaking any Work.

2-1.05 **NONCOLLUSION DECLARATION.** By submitting a bid, the Bidder represents and warrants that such bid is genuine and not a sham or collusive or made in the interest or on the behalf of any person therein named, and that the Bidder has not, directly or indirectly, included or solicited any other Bidder to put in a sham bid, or any other person, firm, or corporation to refrain from bidding, and that the Bidder has not in any manner sought collusion to secure the Bidder an advantage over any other Bidder.

Bidders shall submit a properly completed and executed "Noncollusion Declaration" in the form required by Public Contract Code Section 7106 and provided with the Proposal (PROP-11).

2-1.06 **DISQUALIFICATION, REMOVAL OR OTHER PREVENTION OF BIDDING.** A bid may be rejected on the basis of a Bidder, any officer of such Bidder, or any employee of such Bidder who has a proprietary interest in such Bidder, having been disqualified,

FOR COUNCIL APPROVAL ONLY

removed, or otherwise prevented from bidding on, or completing a federal, state, or local project because of a violation of law or a safety regulation.

2-1.07 **PROPOSAL GUARANTY.** All bids shall be accompanied by one of the following forms of Bidder's security: Cash, a cashier's check, a certified check, or a Bidder's bond executed by an admitted California surety insurer, made payable to the City of Roseville, or any other form of security deemed acceptable by the City Attorney. The security shall be in an amount equal to at least ten percent (10%) of the amount bid. A bid will not be considered unless one of the form of Bidder's security is enclosed with it.

A Bidder's bond shall conform to the City's bond form in the Proposal and shall be properly filled out and executed.

2-1.08 **SCHEDULE OF BID PRICES.** Bidders are directed to submit unit and lump sum prices for all Work set forth in the Contract Documents on the Proposal Form entitled "Schedule of Bid Prices."

Unit prices and lump sum prices, as indicated, must be entered in the appropriate spaces provided in the Schedule of Bid Prices. If applicable, unit prices shall be multiplied by the quantities shown, and the total shall be inserted in the Amount column. In the event of any error or discrepancy between the unit price and the calculated amount, the unit prices shall govern. The City may correct any mathematical errors apparent on the face of the bid.

The amounts shown in the Amount column must be added together in arriving at the Grand Total Bid Price.

Amounts for Allowance bid items must be entered in the exact amount in the Amount column.

The prices included within the Schedule of Bid Prices shall include all costs for labor,

FOR COUNCIL APPROVAL ONLY

materials, tools, equipment, services, Subcontractors, suppliers, taxes, insurance, shipment, delivery, overhead, profit, and all other costs necessary to perform the Work in accordance with the Contract Documents.

The Grand Total Bid Price shall be indicated in the Summary table form included with the Schedule of Bid Prices. The Grand Total Bid Price shall be the sum of the amounts bid for each of the designated portions of the Work, as more specifically described on the Schedule of Bid Prices form itself.

Full compensation for complying with the Contract Documents, including requirements of the Standard Specifications, the General Conditions, Supplemental Conditions, and all warranties, shall be considered included in the bid items and no additional compensation shall be allowed therefor.

Full compensation for completion of all work as shown on the plans, as specified in the Specifications, and as directed by the City, shall be considered included in the bid items and no additional compensation shall be allowed.

Bidders are strongly discouraged from submitting unbalanced bids. As used herein, the term "unbalanced bid" is defined as any bid that does not include a reasonable proportionate allocation of indirect costs and profit of each bid item indicated in the Schedule of Bid Prices. The City reserves the right to reject any unbalanced bid if the City determines that there is a reasonable doubt that an acceptance of the bid will not result in the lowest ultimate cost to the City with regard to the work or a disproportionate distribution of contract funds.

The City reserves the right to delete any bid item in its entirety and/or significantly reduce the quantity of Work under a bid item. The City makes no representation that any Work under a bid item will be performed during the course of the Project or that the Work will be

FOR COUNCIL APPROVAL ONLY

performed at the quantities included in the Schedule of Bid Prices. As provided in the General Conditions, for any deleted Work, Contractor shall not be entitled to payment of the indirect costs and profit included for said bid item. All bid items shall be considered distinct and severable from the remaining bid items, and each Bidder acts at its peril if its bid is unbalanced.

The City shall compare bids on the basis of the Grand Total Bid Price, which includes the base bid and any alternates designated on the Schedule of Bid Prices. Alternates may or may not be awarded, or may be awarded in any combination, at the City's discretion.

2-1.09 **WITHDRAWAL OF PROPOSALS.** Any bid may be withdrawn at any time prior to the time fixed in the Notice to Contractors for the opening of bids, provided that a request in writing, executed by the Bidder or its duly authorized representative, for the withdrawal of such bid is filed with the City Clerk. Facsimile and electronic mail requests are not acceptable. The withdrawal of a bid shall not prejudice the right of a Bidder to file a new bid. The withdrawal of any bid after the time fixed in the Notice to Contractors for the opening of bids will not be permitted.

2-1.10 **ADDENDUM.** Proposals shall include all costs and account for all Addenda issued prior to opening of bids. The Bidder is responsible for verifying that all issued Addenda have been received. An Addendum acknowledgment form for each Addendum shall be included as part of the Proposal submittal.

2-1.11 **PUBLIC OPENING OF PROPOSALS.** Proposals will be publicly opened and read at the time and place indicated in the Notice to Contractors. Bidders or their authorized agents are invited to be present.

2-1.12 **TRENCHING AND EXCAVATION WORK.** In accordance with the provisions of California Labor Code Section 6707, if the Work involves construction of a

FOR COUNCIL APPROVAL ONLY

pipeline, sewer, sewage disposal system, boring or jacking pits, or similar trenches or open excavations, which are five feet (5') or deeper, each bid submitted shall contain, as a bid item, adequate sheeting, shoring, and bracing, or equivalent method, for the protection of life or limb, which shall conform to all applicable safety orders.

FOR COUNCIL APPROVAL ONLY

SECTION 3: EVALUATION OF BIDS

3-1.01 **BID EVALUATION PROCESS.** Bids will be evaluated to determine the apparent low Bidder. The apparent low Bidder will be determined on the basis of the Grand Total Bid Price, as shown in the Schedule of Bid Prices. If additive or deductive alternates are used in the Schedule of Bid Prices, the apparent low Bidder will be the Bidder with the lowest total of the bid prices for base contract items plus the alternates designated by the City as those that will be used for determining the lowest bid price. However, the City reserves the right to (1) not award any alternates or (2) award any combination of alternates.

In case of discrepancy between the total of the base contract items and any specified alternates and the stated Grand Total Bid Price, the total of the base contract items plus specified alternates shall prevail. Any mathematical errors that appear on the face of the bid will be corrected by the City and the City will use the mathematically corrected addition. For example, if the mathematical total of Bidder's base contract items plus specified alternates equals $1,000,000, but the Bidder has written $1,250,000 as the Grand Total Bid Price, the City will consider $1,000,000 to be the Bidder's Grand Total Bid Price for purposes of comparison to other Bidders and actual bid award. The City reserves its rights to reject or accept bids based on discrepancies between the stated Grand Total Bid Price and the actual mathematical total of the base contract bid items, plus specified alternates.

FOR COUNCIL APPROVAL ONLY

3-1.02 **REJECTION OF IRREGULAR PROPOSALS.** Proposals may be rejected in the City's sole discretion if they show any alterations of form, additions not called for, conditional bids, incomplete bids, erasures, or irregularities of any kind. However, the City reserves the right to waive any minor irregularities and informalities in any bid or in the bid procedure for any reason.

3-1.03 **COMPETITIVE BIDDING.** If more than one proposal is offered by any individual, firm, partnership, corporation, association, or any combination thereof, under the same or different names, all such proposals may be rejected. A party who has quoted prices on materials or Work to a Bidder is not thereby disqualified from quoting prices to other Bidders, or from submitting a bid directly for the materials or Work.

All Bidders are put on notice that any collusive agreement to control or affect the awarding of this Contract is in violation of the competitive bidding requirements of the City Charter, State Contract Act and the Business and Professions Code and may render void any Contract let under such circumstances.

3-1.04 **RELIEF OF BIDDERS.** If the Bidder claims a mistake was made in its bid, the Bidder shall give the Department written notice within five (5) Days after the opening of the bids of the alleged mistake, specifying in the notice in detail how the mistake occurred. No relief from a claimed mistaken bid shall be granted unless such mistake clearly appears on the face of the bid submitted to the City. Claimed mistakes on backup worksheets, spreadsheets, computerized bidding programs, or any other similar calculative bidding mistake which is not apparent on the face of the bid shall not under any circumstance be considered as a basis for relief. The burden of proving the occurrence of a mistake entitling a Bidder to relief from its bid rests entirely on the Bidder. Relief from bids shall be in the City's sole discretion.

FOR COUNCIL APPROVAL ONLY

SECTION 4: AWARD AND EXECUTION OF CONTRACT

4-1.01 **AWARD OF CONTRACT.** The City reserves the right to reject any and all proposals and to award (or not award) any combination of bid items at its option. Any such award will be to the lowest responsible Bidder whose proposal complies with the requirements prescribed for the bid items awarded. Such award, if made, will be made within sixty (60) business days after the opening of the proposals. If the lowest responsible Bidder refuses or fails to execute the Contract, or provide an acceptable Performance Bond, Payment Bond, and insurance certificate(s), the City may award the Contract to the second lowest responsible Bidder. Such award, if made, will be made within eighty-two (82) business days after the opening of proposals. If the second lowest responsible Bidder refuses or fails to execute the Contract, or provide an acceptable Performance Bond, Payment Bond, and insurance certificate(s), the City may award the Contract to the third lowest responsible Bidder. Such award, if made, will be made within one hundred four (104) business days after the opening of the proposals. The above time periods within which the award of Contract may be made are subject to extension for such further period as may be agreed upon in writing between the City and the Bidder concerned.

FOR COUNCIL APPROVAL ONLY

4-1.02 **RETURN OF BIDDER'S SECURITIES.** Within ten (10) Days after the award of the Contract, the City Clerk will return all Bidders' securities, other than Bidders' bonds, accompanying the proposals that are not to be further considered in making the award. Retained Bidders' securities will be held until the Contract has been fully executed, after which all Bidders' securities, except Bidders' bonds and any Bidders' securities that have been forfeited, will be returned.

4-1.03 **CONTRACT BONDS.** The successful Bidder shall furnish two (2)

bonds in the form contained in the section entitled Insurance Broker Information Packet and Bonds. One (1) bond shall secure the payment of the claims of laborers, mechanics or materialmen employed on the Work under the Contract, and the other bond shall guarantee the faithful performance of the Contract.

Each of the two (2) bonds shall be in a sum equal to one hundred percent (100%) of the Contract Price. If the Contract Price increases by the issuance of Change Orders, the penal amounts of the bonds required shall increase accordingly. Sureties on each of said bonds shall be satisfactory to the City.

All alterations, extensions of time, extra and additional Work, and other changes authorized by the Standard Specifications, the General Conditions, the Supplemental Conditions or any part of the Contract may be made without securing the consent of the surety or sureties on the Contract bonds.

Furthermore, the successful Bidder shall furnish a certificate from the County Clerk as required by California Civil Code of Procedure Section 995.660(a)(3).

4-1.04 **INSURANCE.** At the time of the execution of the Contract, the Contractor shall, at its own expense, procure, and at all times during the prosecution of the Work maintain in full force and effect Worker's Compensation Insurance, and Liability Insurance as specified in the General Conditions. The Contractor shall provide a Certificate of Insurance in the form contained in the section entitled Insurance Broker Information Packet.

4-1.05 **EXECUTION OF CONTRACT.** The Contract shall be signed by the successful Bidder and returned, together with all the required Contract bonds and insurance certificates, within fifteen (15) Days after the Contract has been awarded, or as otherwise directed, in writing, by the City.

FOR COUNCIL APPROVAL ONLY

If the Bidder is an individual, the Contract shall be executed personally by the Bidder. If the Bidder is a partnership, it is desirable that the Contract be executed by all of the partners, but it may be executed by one of them. If the Bidder is a corporation, it must be executed by two officers of the corporation consisting of (1) the chairman of the board, president or vice president; and (2) the secretary, assistant secretary, chief financial officer, treasurer or assistant treasurer, or by a person authorized by the corporation to execute written contracts on its behalf, and the corporate seal affixed thereto. In the alternative, a person other than an officer may sign the Contract, provided evidence satisfactory to the City is provided indicating the individual's authority to bind the corporation. If the corporate seal is not affixed to the Contract, or if it is executed by a person other than officers, or only by one officer, there must be attached to the Contract a certified copy of a resolution of the corporation authorizing such officer or person to execute written contracts for and on behalf of the corporation. If the Bidder is a joint venture, the Contract must be executed on behalf of each participating firm by officers or other individuals who have the full and proper authorization to do so.

4-1.06 **FAILURE TO EXECUTE CONTRACT.** Failure of the lowest responsible Bidder, the second lowest responsible Bidder, or the third lowest responsible Bidder to execute the Contract and file acceptable bonds and insurance as provided within fifteen (15) Days after the Contract has been awarded, or as otherwise directed, in writing, by the City, shall be just cause for annulment of the award and forfeiture of the Bidder's security. The successful Bidder may file with the City Clerk a written notice, signed by the Bidder or Bidder's authorized representative, specifying that the Bidder will refuse to execute the Contract if presented to Bidder. The filing of such notice shall have the same force and effect as the failure of the Bidder to execute the Contract and furnish acceptable bonds within the time prescribed.

FOR COUNCIL APPROVAL ONLY

SECTION 5: BID PROTEST PROCEDURES

5-1.01 **POLICY/PROCEDURES.** It is the policy of the City to consider fully and adjudicate promptly protests filed by prospective Bidders relating to the City's bidding procedure or award of the Contract. Protests shall be filed and processed in accordance with Section 4.12.150 of the Roseville Municipal Code. A Bidder's failure to follow the bid protest procedures may result in rejection of the protest by the City.

FOR COUNCIL APPROVAL ONLY

PROPOSAL TO THE DEPARTMENT OF Parks, Recreation & Libraries

Project: CO-61 Park Project

Name of Bidder _____ Business Phone _____

Business Address _____

Place of Business _____

Contractor's License No. _____

License Expiration Date_____

License Classification Type _____

DIR Registration No. _____

Type of business organization: _____

*If a Corporation, incorporated under the laws of the State of: _____

City of Roseville Business License No._____

The undersigned Bidder herewith submits this Proposal and binds itself on award by the City of Roseville under this bid to execute a Contract in accordance with its bid and the Contract Documents.

The Notice to Contractors, Instructions to Bidders, Form of Agreement, Specifications, General Conditions, Supplemental Conditions, Contract Drawings, and Addenda, if any, are made part of this bid and all provisions thereof are hereby accepted, and all representations and warranties are required thereby are hereby affirmed.

The work to be done is described in the Bidding Documents entitled _____ _____, City of Roseville, California. This offer shall be irrevocable for a period of sixty (60) Days after the date on which bids are opened.

FOR COUNCIL APPROVAL ONLY

The undersigned Bidder understands that any clarification made to the above or any new and different conditions or information submitted on or with its Proposal, other than that requested, may render the bid non-responsive.

The undersigned, as Bidder, declares that the only persons or parties interested in this Proposal as principals are those named herein; that this Proposal is made without collusion with any other person, firm, or corporation; that the Bidder has carefully examined the location of the proposed Work, the attached Form of Agreement, and the plans, Specifications, and other Contract Documents; and agrees if this Proposal is accepted, that it will contract with the City of Roseville, in the form of a copy of the Agreement contained in the Project Manual, to provide all necessary machinery, tools, apparatus and other means of construction, and to do all the work and furnish all the materials specified in the Contract Documents, in the manner and time therein prescribed, and according to the requirements of the Director, as therein set forth, and that the Bidder will take in full payment therefore prices indicated in the Schedule of Bid Items, including all work modified by addendum numbers_____. (IF NONE, STATE NONE).

Bids are required for all Bid Items. The amount of the Bid for comparison purposes will be the total of all items awarded.

The Bidder shall set forth for each item of work, in clearly legible figures, an item ("unit") price and a total for the item in the respective spaces provided for this purpose in the Schedule of Bid Items.

The prices included within the Schedule of Bid Items include all costs for labor, materials, tools, equipment, services, Subcontractors, suppliers, taxes, insurance, shipment, delivery, overhead, profit, and for all other costs necessary to perform the Work in accordance

FOR COUNCIL APPROVAL ONLY

with the Contract Documents.

Accompanying this Proposal is _____.

(Notice: Insert the words "Cash $_____," "Cashier's Check," "Certified Check," or "Bidder's Bond," as the case may be, in an amount equal to at least ten percent (10%) of the total of the Bid.)

The names of all persons interested in the foregoing Proposal as Principals, are as follows: _____

_____

_____

_____

FOR COUNCIL APPROVAL ONLY

If SOLE OWNER, execute here:

I sign as sole owner of the business named above:

_____

If PARTNERSHIP, one or more partners sign here:

The undersigned certify that we are partners in the business named above and that we sign this bid with the full authority to do so:

_____

_____

If CORPORATION, execute here:

Corporate Name: _____

Incorporated under the laws of the State of _____

The undersigned certify that they sign this bid with the full and proper authorization so to do:

By_____	By_____
*Signature of Authorized Official**	*Signature of Authorized Official**
_____	_____
Title	*Title*
_____	_____
Typewritten or Printed Name	*Typewritten or Printed Name*

If JOINT VENTURE, execute here:

Joint Venture name composed of: _____

The undersigned certify that they sign this bid with the full and proper authorization so to do:

_____	_____
*Signature of Authorized Official**	*Signature of Authorized Official**
_____	_____
Title	*Title*
_____	_____
Typewritten or Printed Name	*Typewritten or Printed Name*

FOR COUNCIL APPROVAL ONLY

*If Bidder is a partnership or Joint Venture, give the full names of all partners and/or Joint Ventures in the space provided (use additional sheet if required). If Bidder is a corporation, two signatures are required as follows: (1) the Chairman, President, or Vice-President and (2) the Secretary, Assistant Secretary, Chief Financial Officer, Treasurer, or Assistant Treasurer. In the alternative, this Agreement may be executed by a single officer or a person other than an officer provided that evidence satisfactory to City is provided demonstrating that such individual is authorized to bind the corporation (example, a copy of a certified resolution from the corporation's board or a copy of the corporation's bylaws).

[LIST OF SUBCONTRACTORS FOLLOWS ON NEXT PAGE.]

FOR COUNCIL APPROVAL ONLY

LIST OF SUBCONTRACTORS

Contractor's Name: _____

The Bidder is required to furnish the following information in accordance with the provisions of Section 4100 and 4114, inclusive, of the Public Contract Code of the State of California. This list and information shall include all Subcontractors that perform work, provide labor or render services to the Bidder in connection with the Project in an amount in excess of one-half of one percent (0.5%) of the total amount of the Bidder Grand Total Price.

FOR COUNCIL APPROVAL ONLY

PORTION/ TYPE OF WORK	% OF CONTRACT	SUB-CONTRACTOR'S NAME	CONTRACTOR LICENSE NO.	DIR REG NO.	BUSINESS ADDRESS (CITY, STATE)

SECURITY FOR COMPENSATION CERTIFICATE

(Required by California Labor Code Section 1861)

TO: City Council
City of Roseville

I am aware of the provisions of Section 3700 of the Labor Code which require every employer to be insured against liability for workers' compensation or to undertake self-insurance in accordance with the provisions of that code, and I will comply with such provisions before commencing the performance of the work of this Contract.

FOR COUNCIL APPROVAL ONLY

_____

_____
(Signature of Bidder)

_____

_____
Business Address

_____
Telephone

BIDDER'S BOND

City Council of the City of Roseville

KNOW ALL MEN BY THESE PRESENTS:

That we _____

_____, as PRINCIPAL, and

_____

a, _____ and duly authorized to transact business under the laws of the State of California, as SURETY, are held and firmly bound unto the City of Roseville in the penal sum of _____ dollars ($_____), being at least TEN PERCENT (10%) OF THE TOTAL AMOUNT OF THE BID of the Principal above named, submitted by said Principal to the City of Roseville, acting by and through the Public Works Director, for the work described below, for the payment of which sum in lawful money of the United States, well and truly to be made, to the Director of the Department to which said Bid was submitted, we bind ourselves, our heirs, executors, administrators and successors, jointly and severally, firmly by these presents.

THE CONDITION OF THIS OBLIGATION IS SUCH,

That whereas the Principal has submitted the above-mentioned Bid to the City Council of the City of Roseville, as aforesaid, for certain construction specifically described as follows, for which Bids are to be opened at the Office of the City Clerk located at 311 Vernon Street, Roseville, California, on _____, 20__ FOR

_____

(Copy here the exact title of work as it appears on the Proposal.)

FOR COUNCIL APPROVAL ONLY

NOW, THEREFORE, IF THE AFORESAID PRINCIPAL is awarded the Contract and, within the time and manner required under the Contract Documents, after the prescribed forms are presented for signature, enters into a written Contract, in the prescribed form, in accordance with the Bid, and files all insurance and two (2) Bonds with the Department, one (1) to guarantee Faithful Performance and the other to guarantee Payment for Labor and Materials, as required by law, then this obligation shall be null and void; otherwise, it shall be and remain in full force and effect.

IN WITNESS WHEREOF, we have hereunto set our hands and seals on this _____ day of _____, 20___.

_____(Seal)

_____(Seal)

_____(Seal)
Principal

_____(Seal)

_____(Seal)

_____(Seal)
Surety

_____

_____
Business Address

FOR COUNCIL APPROVAL ONLY

NOTE: To be considered complete, both the Principal and the Surety must sign this Bidder's Bond. In addition, signatures of those executing for the Surety must be properly acknowledged.

Project CO-61 Park Project

Contractor _____

SCHEDULE OF BID ITEMS

FOR COUNCIL APPROVAL ONLY

SCHEDULE OF BID ITEMS

CO-61 PARK

The bidder, in compliance with the published Notice to Contractors, having examined the Plans and Specifications, any and all addenda, any related documents, and all of the sites of the proposed work, and being familiar with all the conditions surrounding the construction of the proposed project, including the availability of material, hereby proposes to furnish all labor, materials, and supplies, and to construct the project in accordance with the Contract Documents, within the time period set forth therein, and at the prices stated. This is a lump sum bid project. These prices are to include all labor, materials, supplies, and all other expenditures incidental to complete compliance to the Contract Documents.

The work to be included in the Contract shall be determined by the City prior to award of Contract. **The amount of the bid for comparison and award purposes shall be the total amount set forth in the "Grand Total Bid Price".** The City reserves the right to award none, all or selected add alternates as the budget permits.

BASE BID:
Base bid includes all work as shown on the plans, project manual, and addenda to construct the **CO-61 Park** project.

Numerical **Base** Bid: $_____

Written **Base** Bid: _____ dollars and _____

ADD ALTERNATES:

Add Alternate #1 – Swing Set with Containment and Seating

Numerical **Additive Alternative #1** Bid: $_____

Written **Additive Alternative #1** Bid: _____ dollars and _____

Add Alternate #2 – Half-Court Basketball and Benches

Numerical **Additive Alternative #2** Bid: $_____

Written **Additive Alternative #2** Bid: _____ dollars and _____

Add Alternate #3 – Shade Structure over Picnic Area

Numerical **Additive Alternative #3** Bid: $_____

Written **Additive Alternative #3** Bid: _____ dollars and _____

Add Alternate #4 – Additional Turf Area with Irrigation & Mow Band

Numerical **Additive Alternative #4** Bid: $_____

Written **Additive Alternative #4** Bid: _____ dollars and _____

FOR COUNCIL APPROVAL ONLY

SCHEDULE OF BID ITEMS- continued

Add Alternate #5 – Paved Bike Trail

Numerical **Additive Alternative #5** Bid: $_____

Written **Additive Alternative #5** Bid: _____ dollars and _____

Add Alternate #6 – Shade Structure over Play Area

Numerical **Additive Alternative #5** Bid: $_____

Written **Additive Alternative #5** Bid: _____ dollars and _____

GRAND TOTAL BID PRICE:

Lump Sum Base Bid plus Add Alternates #1 through #6

Numerical **Grand Total Bid Price**: $_____

Written **Grand Total Bid Price**: _____ dollars and _____

The additions/deletions sheets (PROP – 13C through PROP – 13E) are required to be completed in their entirety.

The additions/deletions sheets will not be considered for bid award but may be used for contract change orders.

Contractor Name (print or type): _____

Signature (by authorized representative): _____

Date: _____ License No.: _____ Class: _____

FOR COUNCIL APPROVAL ONLY

CO-61 PARK PROJECT

For Additions and Deletions Only

Contractor shall provide itemized costs as shown below for use during construction for additions or deletions only. Unit costs to be listed are based on the project plans, specifications, Parks Construction Standards and the Design & Construction Standards, unless otherwise noted. Items listed are not necessarily shown on the plans or identified in the Technical Specifications.

Item	Description	Unit	Unit Cost
1	EC-2 Preservation of Existing Vegetation	sf	
2	EC-3 Hydraulic Mulch	sf	
3	EC-4 Hydroseeding	sf	
4	EC-6 Straw Mulch	sf	
5	EC-7 Geotextiles and Mats	sf	
6	EC-8 Wood Mulching	sf	
7	EC-10 Velocity dissipation device	ea	
8	EC-11 Slope Drains	ea	
9	EC-14 Compost Blanket	sf	
10	EC-16 Non-Vegetative Stabilization	sf	
11	SE-1 Silt Fence	lf	
12	SE-5 Fiber Rolls	lf	
13	SE-6 Gravel Bag Berm	ea	
14	SE-7 Street Sweeping and Vacuuming	ea	
15	SE-8 Sandbag Barrier	lf	
16	SE-9 Straw Bale Barrier	lf	
17	SE-10 Storm Drain Inlet Protection	ea	
18	TC-1 Stabilized construction entrance/exit	ea	
19	TC-3 Entrance/outlet tire wash	ea	
20	Clearing and Grubbing	sf	
21	Site Security Fencing	lf	
22	Rough Grading (Earthwork)	cy	

Items 1 through 19 are to be consistent with requirements detailed in California Stormwater Quality Association Stormwater Best Management Practice Handbook, latest edition.

FOR COUNCIL APPROVAL ONLY

CO-61 PARK PROJECT

For Additions and Deletions Only (continued)

Item	Description	Unit	Unit Cost
23	Finish grading (earthwork)	sf	
24	1" Schedule 80 PVC Pipe	lf	
25	12" Storm drain, PVC, SDR-35	lf	
26	6" Storm drain, PVC, SDR-35	lf	
27	4" Storm drain, PVC, SDR-35	lf	
28	4" Sanitary Sewer, SDR-35	lf	
29	1" Domestic Water Service, meter, backflow	ls	
30	2" Recycled Water Service, Meter	ea	
31	Sanitary Sewer Cleanout	ea	
32	12"x12" Storm Drain Catch Basin	ea	
33	24"x24" Storm Drain Drop Inlet	ea	
34	Storm Drain Connection to Existing SD Stub	ea	
35	Electrical POC	ls	
36	Concrete Paving - ROW (per DS Standard)	sf	
37	Concrete Paving (per Parks detail PK-31)	sf	
38	Redwood Header Board	lf	
39	Concrete Mow Curb (6")		
40	Concrete Mow Curb (12")	lf	
41	Stabilized Decomposed Granite Paving	sf	
42	Drinking Fountain with Bottle Filler	ea	
43	Picnic Table	ea	
44	Picnic Table, Accessible	ea	
45	Park Bench with Back	ea	
46	Basketball Hoop, standard, backboard, Assembly	ea	
47	Park Identification Sign	ea	
48	16' Pole Light LED	ea	
49	Trash Receptacle	ea	
50	Play Area Curb (PK-36)	lf	

FOR COUNCIL APPROVAL ONLY

CO-61 PARK PROJECT

For Additions and Deletions Only (continued)

Item	Description	Unit	Unit Cost
51	Play Equipment (small)	ls	
52	Engineered Wood Fiber (12" depth)	cy	
53	Drain rock (3" depth)	cy	
54	Play Area Access Ramp	ea	
55	Playground Rules Sign	ea	
56	Irrigation Booster Pump	ls	
57	Irrigation Controller with Enclosure	ea	
58	2" Recycled Water Filter (Amiad)	ls	
59	Flow meter and Master Valve	ls	
60	Irrigation Mainline 3"	lf	
61	Irrigation Control Wire (#12,#14 AWG-UF)	lf	
62	6" Sleeve (Sch 40)	lf	
63	Irrigation Lateral Lines PVC	lf	
64	Irrigation Remote Control Valve 2"	ea	
65	Irrigation Remote Control Valve 1.5"	ea	
66	Irrigation Remote Control Valve 1"	ea	
67	Quick Coupling Valve 1"	ea	
68	R-VAN Rotary Assembly incl. Swing Joint	ea	
69	Tree Bubbler	ea	
70	Soil Amendments	sf	
71	Hydroseeded Turf	sf	
72	Sodded Turf	sf	
73	Install Trees (15 Gal.)	ea	
74	Install Trees (24" Box)	ea	
75	Install Shrubs (5 Gallon)	ea	
76	Install Shrubs/Grasses (1 Gallon)	ea	
77	Install Groundcover Roses (2 Gallon)	ea	
78	Bark Mulch (3")	cy	
79	Landscape Maintenance (per 30 Day)	ea	

FOR COUNCIL APPROVAL ONLY

NONCOLLUSION DECLARATION TO BE EXECUTED BY
BIDDER AND SUBMITTED WITH BID

The undersigned declares:

I am the _____ of _____, the party making the foregoing bid.

The bid is not made in the interest of, or on behalf of, any undisclosed person, partnership, company, association, organization, or corporation. The bid is genuine and not collusive or sham. The Bidder has not directly or indirectly induced or solicited any other Bidder to put in a false or sham bid. The Bidder has not directly or indirectly colluded, conspired, connived, or agreed with any Bidder or anyone else to put in a sham bid, or to refrain from bidding. The Bidder has not in any manner, directly or indirectly, sought by agreement, communication, or conference with anyone to fix the bid price of the Bidder or any other Bidder, or to fix any overhead, profit, or cost element of the bid price, or of that of any other Bidder. All statements contained in the bid are true. The Bidder has not, directly or indirectly, submitted his or her bid price or any breakdown thereof, or the contents thereof, or divulged information or data relative thereto, to any corporation, partnership, company, association, organization, bid depository, or to any member or agent thereof, to effectuate a collusive or sham bid, and has not paid, and will not pay, any person or entity for such purpose.

FOR COUNCIL APPROVAL ONLY

Any person executing this declaration on behalf of a Bidder that is a corporation, partnership, joint venture, limited liability company, limited liability partnership, or any other entity, hereby represents that he or she has full power to execute, and does execute, this declaration on behalf of the Bidder.

I declare under penalty of perjury under the laws of the State of California that the foregoing is true and correct and that this declaration is executed on _____ [date], at _____ [city], _____ [state].

_____
(Signature of Declarant)

DISQUALIFICATION QUESTIONNAIRE

The Bidder shall complete, under the penalty of perjury, the following questionnaire:

Has the Bidder, any officer of the Bidder, or any employee of the Bidder who has proprietary interest in the Bidder, ever been disqualified, removed, or otherwise prevented from bidding on, or completing a federal, state, or local government project because of a violation of law or a safety regulation?

Yes_____ No_____

If the answer is yes, explain the circumstances in the following space.

_____

_____

_____

_____

_____

_____

FOR COUNCIL APPROVAL ONLY

NAME OF BIDDER: _____

SIGNATURE OF BIDDER: _____

TITLE OF BIDDER: _____

DATE: _____

ACKNOWLEDGEMENT OF INSURANCE AND BOND REQUIREMENTS

Included in the Bid Price is full compensation for the requirements set forth in the INSURANCE BROKER INFORMATION PACKET of the Project Manual.

NAME OF BIDDER: _____

SIGNATURE OF BIDDER: _____

TITLE OF BIDDER: _____

DATE: _____

FOR COUNCIL APPROVAL ONLY

DISCLAIMER OF WARRANTIES AND ACCURACY OF DATA

Although soil and site investigation reports have been obtained from sources believed to be reliable, no warranty expressed or implied is made regarding accuracy, adequacy, completeness, legality, reliability or usefulness of any information contained therein. These reports are subject to change at any time, may be incomplete, and/or may contain errors. This information is provided for informational purposes only. The City of Roseville provides this information on an "as is" basis. Warranties of any kind, express or implied, or statutory, including but not limited to the implied warranties of merchantability, and fitness for a particular purpose ARE DISCLAIMED to any party viewing these documents or to any third party.

The City of Roseville does not accept and expressly disclaims liability to any party viewing such information, or to any third party whatsoever, for any loss, damage, or injury (including incidental or consequential damages) whether such loss, damage, or injury is the result of negligence, willful or intentional misconduct, or any other cause.

I have read and acknowledged the above disclaimer and agree to hold harmless the City of Roseville on any theory of liability for any loss, damage or injury whether in contract, strict liability or tort arising in any way out of the use or contents of the released information or documents described above or the performance of the work called for herein.

FOR COUNCIL APPROVAL ONLY

Print Name	Signature
Name of Business/Company/Corporation	Date
Address	Phone

END OF PROPOSAL

FOR COUNCIL APPROVAL ONLY

A G R E E M E N T

THIS AGREEMENT, is made and entered into this _____ day of _____, 20_____, by and between the City of Roseville, a municipal corporation, ("CITY"), and _____, a _____, ("CONTRACTOR"); and

W I T N E S E T H:

WHEREAS, the City Council of the CITY, at a meeting held on the____day of _____, 20_____, approved plans and specifications for the _____

and directed the City Clerk to advertise for sealed proposals for doing said work and providing that bids be submitted on the _____ day of _____, 20_____; and

WHEREAS, the City Clerk, thereafter duly and regularly caused a notice to be published in the manner and for the time prescribed by law; and

WHEREAS, CONTRACTOR, pursuant to the provisions of said notice duly filed a bid with the City Clerk, a true copy of which bid is now on file in the office of the City Clerk, and is hereby referred to and by this reference made a part hereof as fully as if set forth at length herein; and

WHEREAS, all bids received pursuant to said notice were opened and examined and publicly declared at the time specified in said advertisement for bids and at a meeting of the City Council held on the _____ day of _____, 20_____, the Council found and

FOR COUNCIL APPROVAL ONLY

declared the bid of CONTRACTOR to be the lowest responsible bid and thereupon awarded a contract to CONTRACTOR to do the work referred to in the aforementioned specifications.

NOW, THEREFORE, the parties agree as follows:

1. THE WORK. CONTRACTOR agrees:

a. To do the work and furnish all the labor, materials, tools, supplies, equipment, superintendence, insurance, and bonds required for the _____

_____

in accordance with the Contract Documents (the Work).

b. To do and perform the Work contemplated hereby in a good and workmanlike manner under the direction of and to the satisfaction of the Director of Public Works of the City of Roseville.

2. PAYMENT. CITY shall pay CONTRACTOR _____

_____ dollars ($_____) for the Work to be done under this Agreement in accordance with the Contract Documents.

3. CONTRACT DOCUMENTS. The complete Agreement between the parties hereto consists of the following documents:

a. The advertisement for bids (including the notice to bidders, instructions to bidders and proposals);

b. The accepted bid;

c. Plans and specifications (including general conditions, supplemental conditions, special provisions and construction details);

d. Bonds and insurance required by the specifications; and

FOR COUNCIL APPROVAL ONLY

e. This contract.

All documents specified above are intended to operate so that any work called for in any one and not mentioned in the other, or vice versa, is to be executed the same as if mentioned in all said documents.

4. LIQUIDATED DAMAGES. In the event CONTRACTOR does not complete the Work within the time specified, CONTRACTOR agrees that CITY will suffer damages. Inasmuch as the actual damages which would result from such breach by CONTRACTOR under this Agreement are uncertain, and would be impractical or extremely difficult to fix, CONTRACTOR agrees that it shall pay, or CITY shall deduct from CONTRACTOR's fee, the amount of $_____ per day as liquidated damages, in the event of such delay.

5. TIME OF COMPLETION. Time is of the essence of this Agreement. CONTRACTOR shall complete all Work under the Contract Documents within _____ Days of the date of this Contract. CONTRACTOR shall begin work by the date specified in the "Notice to Proceed" letter and shall diligently prosecute all of the Work under this Contract in all parts and requirements as defined in the Contract Documents.

6. SERVICE OF NOTICE. Any notice required or permitted to be given under this Agreement shall be deemed given when (a) personally delivered to the recipient identified below; (b) mailed by registered or certified mail, return receipt requested, postage pre-paid, to the address specified below; or (c) sent by facsimile, with confirmation of receipt, to the facsimile number identified below.

FOR COUNCIL APPROVAL ONLY

CITY OF ROSEVILLE	CONTRACTOR
_____	_____
_____	_____
_____	_____
_____	_____

CITY may also act through either its architect or construction manager if CITY expressly gives notice to CONTRACTOR, in writing, that CITY's designee has authority to act for CITY in a specific capacity.

7. DISPUTES. Disputes arising from this Agreement will be determined in accordance with the Contract Documents and Public Contract Code Sections 10240-10240.13.

8. GOVERNING LAW. This Agreement shall be governed by and construed in accordance with the laws of the State of California.

9. INDEPENDENT CONTRACTOR. CONTRACTOR shall act as an independent contractor, and covenants and agrees that it will conduct itself consistent with such status, that it will neither hold itself out as, nor claim to be, an officer or employee of CITY by reason of this Agreement.

10. SUCCESSORS IN INTEREST. This Agreement shall be binding upon the heirs, successors, executors, administrators and assigns of the respective parties hereto.

11. MODIFICATION. This Agreement and each provision contained herein may be waived, amended, supplemented or eliminated only by mutual written agreement of the parties.

12. SEVERABILITY. If any of the provisions contained in this Agreement are for any reason held invalid or unenforceable, such holding shall not affect the remaining provisions or the validity and enforceability of the Agreement as a whole.

13. INTEGRATED AGREEMENT. This is an integrated agreement and contains all of the terms, considerations, understanding and promises of the parties. It shall be read as a whole.

14. CONTRACTORS LICENSE LAW. CONTRACTORS ARE REQUIRED BY LAW TO BE LICENSED AND REGULATED BY THE CONTRACTORS' STATE LICENSE

FOR COUNCIL APPROVAL ONLY

BOARD WHICH HAS JURISDICTION TO INVESTIGATE COMPLAINTS AGAINST CONTRACTORS IF A COMPLAINT REGARDING A PATENT ACT OR OMISSION IS FILED WITHIN FOUR (4) YEARS OF THE DATE OF THE ALLEGED VIOLATION. A COMPLAINT REGARDING A LATENT ACT OR OMISISON PERTAINING TO STRUCUTRAL DEFECTS MUST BE FILED WITHIN TEN (10) YEARS OF THE DATE OF THE ALLEGED VIOLATION. ANY QUESTIONS CONCERNING A CONTRACTOR MAY BE REFERRED TO THE REGISTRAR, CONTRACTORS' STATE LICENSE BOARD, P.O. BOX 26000, SACRAMENTO, CALIFORNIA 95826.

IN WITNESS WHEREOF, the City of Roseville, a municipal corporation, has authorized the execution of this Agreement in duplicate by its City Manager and attestation by its City Clerk under authority of Resolution No. _____, adopted by the Council of the City of Roseville on the ____day of _____, 20_____, and CONTRACTOR has caused this Agreement to be duly executed.

FOR COUNCIL APPROVAL ONLY

CITY OF ROSEVILLE, a municipal corporation

BY:_____
DOMINICK CASEY
City Manager

ATTEST:

BY:_____
CARMEN AVALOS
City Clerk

_____, a
_____

BY: _____
its: _____

and

BY: _____
its: _____

APPROVED AS TO FORM:

BY: _____
MICHELLE SHEIDENBERGER
City Attorney

APPROVED AS TO SUBSTANCE:

BY: _____

Print Name:_____

Title:_____

FOR COUNCIL APPROVAL ONLY

INSURANCE BROKER INFORMATION PACKET

Project:_____

NOTICE TO CONTRACTOR:

For your convenience, this package contains the Requirements for Insurance and Bonds for this project, including the necessary City forms. You are required to return these forms in addition to the executed Contract within fifteen (15) calendar days after the award of the Bid, unless otherwise directed by City in writing. (See the Instructions to Bidders.)

Please insert the dollar amount of your accepted Bid into the blank on page INS-1 and present this entire package to your insurance broker if you are awarded the Bid.

FOR COUNCIL APPROVAL ONLY

TABLE OF CONTENTS

	Page
Notice to Insurance Broker	INS 1
Insurance Requirements	INS 2
Public Works Faithful Performance Bond	INS 10
Public Works Payment Bond	INS 13

FOR COUNCIL APPROVAL ONLY

NOTICE TO INSURANCE BROKER

Your client has been awarded a bid by the City Council of the City of Roseville to perform a public works project known as _____. The Contract Conditions for that project require your client ("the Contractor") to return certain evidence of insurance and bonds to the City Attorney of the City within fifteen (15) days after the Bid award, unless otherwise directed by the City in writing, or else the Bid award may be terminated and awarded to another company.

This package contains the information you will need as an insurance broker to provide the appropriate insurance and bonds to the City. The insurance coverages the Contractor needs are specified in the section entitled "Insurance Requirements." Please note that, in addition to the insurance certificate itself, copies of several endorsements must be actually furnished.

Please refer to the Supplemental Conditions for modifications of the General Conditions, if any, and the requirements of this insurance packet.

Please use the standard City of Roseville Bond Forms provided in this package.

The Bonds required must each be in the penal amount of: $_____.

Bonds must be sent to the following staff person:

_____

_____

_____

Insurance documents must be provided using one of the following methods:

a. By email to roseville@ebix.com

b. By fax to (770) 335-5727

After using one of these methods, please **DO NOT** also send the insurance certificate(s) by mail.

c. Or mail the documents to

City of Roseville
Insurance Compliance
P.O. Box 100085-R1
Duluth, GA 30096

FOR COUNCIL APPROVAL ONLY

When forwarding the documents, please refer to the project name so that the documents can be matched with the Contract for which they are submitted.

Thank you.

FOR COUNCIL APPROVAL ONLY

INSURANCE REQUIREMENTS

The following sections are quoted from the General Conditions:

5-1.23 **INSURANCE COVERAGE.**

A. Evidence of Maintenance Required. The Contractor shall, at its expense, procure and at all times maintain in full force and effect at a minimum the insurance required by this section on all of its operations; and the Contractor shall not allow any Subcontractor to commence work until similar insurance required of the Subcontractor has been obtained and filed. An original Certificate of Insurance, and copies of all required endorsements, all in a form approved by the Risk Manager, evidencing all required coverage or policies shall be filed after the award of the bid and prior to approval of the Contract by the City Council. Contractor shall provide ten (10) days prior written notice to the City of any reduction of coverage limits or cancellation of the coverage or policies shall be given to the City of Roseville as Certificate holder.

B. Qualifying Insurers. With the exception of the State Compensation Insurance Fund, all required insurance policies shall be issued by companies acceptable to the City and licensed to do business in the State of California and who hold a current policy holders alphabetic and financial size category rating of not less than AVII according to the most recent issue of Best's Insurance Reports.

C. Insurance Required.

1. **Commercial General Liability (CGL):** Insurance Services Office Form CG 00 01 covering CGL on an "occurrence" basis, including products and completed operations with limits of no less than Two Million Dollars ($2,000,000) per occurrence for bodily injury, personal injury and property damage for projects under One Million Dollars ($1,000,000) and

FOR COUNCIL APPROVAL ONLY

limits of no less than Five Million Dollars ($5,000,000) per occurrence for bodily injury, personal injury and property damage for projects over One Million Dollars ($1,000,000). If a general aggregate limit applies, either the aggregate limit shall apply separately to this project or the general aggregate limit shall be twice the required occurrence limit.

The Commercial General Liability insurance shall include the following, copies of which shall be provided:

a. Inclusion of the City of Roseville, and its officers, agents, employees, and volunteers, as additional insureds (except for workers' compensation) as respects services or operations under the Contract. The additional insured endorsement for the general liability policy shall be at least as broad as the ISO CG 2010 10 01 combined with ISO CGL Endorsement CG 2037 10 01. Any other endorsement must be approved in writing by the City. Endorsements must include coverage for on-going and completed operations, which coverage shall be maintained for four (4) years following completion of the Project. Endorsements shall cover the City of Roseville, its officers, agents, employees, and volunteers.

b. The insurance shall provide coverage for claims by one insured against another insured and the policies shall not contain any cross-suits exclusions, cross-liability exclusions, or insured versus insured exclusions. The policies shall not contain any classification exclusions purporting to deny coverage for any work to be performed by Contractor or any of its Subcontractors.

c. Stipulation that the insurance is primary and noncontributory, as evidenced by a separate endorsement (CG 20 01 04 13 or an equivalent) or section of the policy, and that neither the City nor its insurers will be called upon to contribute to a loss.

d. Such insurance shall specifically cover the contractual liability of

FOR COUNCIL APPROVAL ONLY

the Contractor.

e. Any available insurance proceeds in excess of the specified minimum insurance coverage requirements and limits shall be available to the additional insureds. Furthermore, the requirements for coverage and limits shall be: (1) the minimum coverage and limits specified in this Agreement; or (2) the full coverage and maximum limits of any insurance proceeds available to the named insureds, whichever is greater.

f. Waiver of subrogation endorsement.

g. The Contractor shall furnish a certificate for the period covered.

2. **Automobile Liability:** Insurance Services Office Form Number CA 0001 covering Code 1 (any auto), or if Contractor has no owned autos, Code 8 (hired) and Code 9 (non-owned), with limits of no less than One Million Dollars ($1,000,000) per accident for bodily injury and property damage.

3. **Workers' Compensation:** In accordance with the provisions of the California Labor Code, Contractor is required to be insured against liability for Workers' Compensation or to undertake self-insurance. Statutory Workers' Compensation and Employers' Liability of at least One Million Dollars ($1,000,000) shall cover all Contractors staff while performing any work incidental to the performance or this Agreement.

4. **Professional Liability:** Professional Liability (Errors and Omission) Insurance appropriate to Contractor's profession, with a limit of liability not less than One Million Dollars ($1,000,000) per occurrence or claim and Two Million Dollars ($2,000,000) aggregate to cover all design and engineering services rendered by Contractor pursuant to the Agreement. Coverage must commence from the first day that Contractor or any of its Subcontractors provided any design or engineering services in connection with the Project.

FOR COUNCIL APPROVAL ONLY

5. **Builder's Risk/Course of Construction Insurance Is ____ OR Is Not _X_ Required by Risk Management:** The Contractor shall be responsible for all loss, damage or destruction whatsoever to the work called for by this Contract until the approval of a Notice of Completion or acceptance of the Work if no Notice of Completion is to be recorded.

The Contractor shall secure "All Risk" type of builder's Risk Insurance of the type covering one hundred percent (100%) of the value of the work performed under this Contract (the value is presumed to be the Contract amount unless otherwise stated in Supplemental Conditions) and all materials, equipment, or other items to be incorporated therein while the same are located at the construction site, a bonded warehouse, or its place of manufacture. At any time, the policy shall cover the value of the work completed. The policy shall cover hazards including the losses due to fire, explosion, hail, rain, lightning, flood (separate insurance as needed), vandalism, malicious mischief, wind, collapse, aircraft, and smoke.

The policies providing such insurance shall name the City as a loss payee as its respective interests may appear, and certified copies of such policies shall be filed with the City. The maximum deductible allowable under the Builder's All Risk policy shall be five percent (5%) of the Contract amount.

Builder's Risk Insurance is not required for coverage of losses in excess of five percent (5%) of the Contract amount for damages resulting from earthquake in excess of a magnitude of 3.5 on the Richter scale, or tidal waves. Coverage in the amount of five percent (5%) of the Contract amount for such losses is required.

6. **Pollution Coverage:** Contractor shall procure pollution liability coverage or other insurance covering claims for bodily injury or property damage arising out of the abatement, removal, storage, transportation, or other exposure to hazardous materials or

FOR COUNCIL APPROVAL ONLY

pollutants, in limits not less than Two Million Dollars ($2,000,000). Contractor shall add the City and all parties required to be indemnified by Contractor as additional insured on all pollution liability policies. X POLLUTION COVERAGE IS NOT REQUIRED ON THIS PROJECT

7. **Higher Coverage Limits:** If Contractor maintains higher coverage limits than the amounts shown above, then the City requires and shall be entitled to coverage for the higher coverage limits maintained by Contractor. Any available insurance proceeds in excess of the specified minimum limits of insurance and coverage shall be available to the City.

8. **Claims Made Coverage:** Liability insurance coverage may not be written on a "claims made" or modified occurrence basis. The Certificate of Insurance must clearly provide that the coverage is on an "occurrence" basis.

5-1.24 **OTHER INSURANCE PROVISIONS.**

A. The requirements of the Standard Specifications as to types and limits of insurance coverage to be maintained by the Contractor, and any approval of insurance by the City, are not intended to, and shall not in any manner limit or qualify the liabilities and obligations otherwise assumed by the Contractor pursuant to the Contract, including, but not limited to, the provisions concerning indemnification, nor preclude the City from taking any other action available to it under any other provision of the Contract or law.

B. The City acknowledges that some insurance requirements contained in these Standard Specifications may be fulfilled by self-insurance on the part of the Contractor. However, this shall not in any way limit liabilities assumed by Contractor under the Contract. Any self-insurance must be approved in writing by the City, in its sole discretion and shall not reduce the limits of liability. Any deductibles or self-insured retentions ("SIR") must be declared on the certificate of insurance and approved by City in writing. Policies containing any

FOR COUNCIL APPROVAL ONLY

SIR provision shall provide or be endorsed to provide that the SIR may be satisfied by either the named insured or City. City reserves the right to obtain a full certified copy of any insurance policy and endorsements. The failure to exercise this right shall not constitute a waiver of such right.

C. The Contractor agrees to include in its contracts with all subcontractors the same requirements and provisions of this Contract, including the indemnity and insurance requirements, to the extent they apply to the scope of the subcontractor's work. Furthermore, the Contractor shall require its subcontractors to agree to be bound to the Contractor and the City in the same manner and to the same extent as the Contractor is bound to the City under this Contract. Additionally, the Contractor shall obligate its subcontractors to comply with these same provisions with respect to any tertiary subcontractor, regardless of tier. A copy of the City's indemnity and insurance provisions will be furnished to the subcontractor or tertiary subcontractor upon request. Alternatively, the Contractor may insure subcontractor(s) under its own policy.

D. The City, its officers, agents, employees, and volunteers are to be covered as insureds with respect to liability arising out of automobiles owned, leased, hired or borrowed by or on behalf of the Contractor; and with respect to liability arising out of work or operations performed by or on behalf of the Contractor including materials, parts or equipment furnished in connection with such work or operations. Coverage shall not extend to any indemnity coverage for the active negligence of the additional insured in any case where an agreement to indemnify the additional insured would be invalid under California Insurance Code Section 11580.04.

E. The limits of insurance required in this Contract may be satisfied by a combination of primary and excess insurance. Any excess insurance shall contain or be

FOR COUNCIL APPROVAL ONLY

endorsed to contain a provision that such coverage shall also apply on a primary and noncontributory basis for the benefit of the City (if agreed to in a written contract) before the City's own insurance shall be called upon to protect it as a named insured.

F. The insurance procured by Contractor shall be subject to the approval of the City, but any acceptance of insurance certificates by the City shall in no way limit or relieve Contractor of its duties and responsibilities under the Agreement.

G. Contractor shall be responsible for all premiums, deductibles, and self-insured retention applicable to the insurance it is required to procure under the Contract. All deductibles or self-insured retentions over five hundred thousand dollars ($500,000) must be approved by the City, in writing. Contractor shall be responsible for all deductibles, self-insured retention payments, and/or increased premiums incurred if the City's policies of insurance are forced to cover damages or respond to claims for which Contractor or its Subcontractors were obligated to provide insurance under the Contract.

H. Failure of the City to enforce in a timely manner any of the requirements of these insurance provisions shall not act as a waiver to enforcement of any of these provisions at a later date.

I. Contractor's indemnity obligations shall not be limited by these insurance provisions and shall survive the expiration of the Contract and the insurance provisions of the Contract shall likewise not be limited by the indemnity provisions of the Contract.

J. THE CITY RESERVES THE RIGHT TO WITHHOLD ANY PROGRESS PAYMENTS TO THE CONTRACTOR IN THE EVENT OF NONCOMPLIANCE WITH ANY INSURANCE REQUIREMENTS.

FOR COUNCIL APPROVAL ONLY

Bond No. _____
Premium $_____

PUBLIC WORKS
FAITHFUL PERFORMANCE BOND

(Project: _____)

WHEREAS, the City of Roseville ("CITY") has awarded a bid and contract to _____ as contractor ("PRINCIPAL") for the public work described as _____ _____ (the "WORK"). The contract ("AGREEMENT"), for the public work described above, and all of its terms and conditions are incorporated by reference and made a part hereof; and

WHEREAS, the PRINCIPAL is required to furnish a bond in connection with the AGREEMENT guaranteeing its faithful performance; and

NOW, THEREFORE, we the undersigned PRINCIPAL and _____ _____, a _____, admitted and duly authorized to transact business under the laws of the State of California, as SURETY ("SURETY"), are held and firmly bound unto the CITY or its successors and assigns in the sum of _____ dollars ($_____) (which amount is not less than 100% of the AGREEMENT price) to be paid to the CITY or its successors and assigns; and for which payment, well and truly to be made, we bind ourselves, our heirs, executors and administrators, successors or assigns jointly and severally, firmly by these presents.

The condition of this obligation is such that if the PRINCIPAL, or its heirs, executors, administrators, successors or assigns, shall abide by, and in all respects promptly and faithfully perform the covenants, conditions and provisions in said AGREEMENT and any alteration thereof made as therein provided, notice of which alterations to Surety being hereby waived, on its part to be kept and performed at the time and in the manner therein specified, and in all respects according to their true intent and meaning, and shall indemnify and save harmless CITY, its officers, agents, employees, volunteers as therein stipulated, then this obligation shall be null and void; otherwise, this obligation shall be and remain in full force and effect.

As condition precedent to the satisfactory completion of the contract, the obligation of the PRINCIPAL and SURETY under this Bond shall remain in effect for a period of one (1) year after the completion and acceptance of the WORK. During that time, if the PRINCIPAL, its heirs, executors, administrators, successors or assigns fails to make full, complete and satisfactory repair and replacement or totally protect the CITY from any loss or damage made evident during that year which results from or is caused by either defective materials or faulty workmanship in the prosecution of the WORK, then the obligation shall remain in full force and effect. However, anything in

FOR COUNCIL APPROVAL ONLY

this paragraph to the contrary notwithstanding, the obligation of the SURETY shall continue so long as any obligation of the PRINCIPAL remains.

No prepayment or delay in payments, and no change, extension, addition or alteration of any provision of the AGREEMENT or in the specifications agreed to between the PRINCIPAL and the CITY, or any forbearance on the part of the CITY shall operate to relieve the SURETY. The SURETY hereby waives the provisions of Section 2819 of the California Civil Code. The SURETY waives all rights of subrogation against the CITY or any person employed by the CITY. If the contract price increases by the issuance of change orders, the amount specified in this bond shall increase by the same amount.

Whenever PRINCIPAL shall be and declared by CITY to be in default under the AGREEMENT, SURETY shall promptly remedy the default, or shall promptly do one of the follow at CITY's election:

1. Undertake through its agents or independent contractors, reasonably acceptable to CITY, to complete the AGREEMENT in accordance with its terms and conditions and to pay and perform all obligations of PRINCIPAL under the AGREEMENT, including without limitation, all obligations with respect to warranties, guarantees, and the payment of liquidated damages.

2. Reimburse CITY for all costs CITY incurs in completing the AGREEMENT, and in correcting, repairing or replacing defects in materials or workmanship and/or materials and workmanship which do not conform to the specifications in the AGREEMENT.

SURETY's obligations hereunder are independent of the obligations of any other surety for the performance of the AGREEMENT, and suit may be brought against SURETY and such other sureties, jointly and severally, or against any one or more of them, or against less than all of them without impairing CITY's rights against the others.

No right of action shall accrue on this bond to or for the use of any person or corporation other than CITY or its successors or assigns.

As part of the obligation secured hereby and in addition to the face amount specified therefore, there shall be included costs and reasonable expenses and fees, including reasonable attorneys' fees, incurred by CITY in successfully enforcing such obligation, all to be taxed as costs and included in any judgment rendered.

[SIGNATURES NEXT PAGE]

FOR COUNCIL APPROVAL ONLY

IN WITNESS WHEREOF, this instrument has been duly executed by the PRINCIPAL and SURETY above-named, on the ____ day of _____, 20___.

PRINCIPAL:

BY:_____

PRINT NAME: _____

PRINT TITLE: _____

AND

BY: _____

PRINT NAME: _____

PRINT TITLE:_____

SURETY:

BY:_____

PRINT NAME: ____ _____

PRINT TITLE:_____

MAILING ADDRESS:

_____

_____

_____

(Notarization by Surety and copy of Power of Attorney required.)

APPROVED AS TO FORM:

BY: _____
City Attorney

FOR COUNCIL APPROVAL ONLY

Bond No. _____
Premium $_____

PUBLIC WORKS
LABOR AND MATERIALS PAYMENT BOND
(Project: _____)

WHEREAS, the City of Roseville ("CITY"), has awarded a bid and contract to _____ as contractor ("PRINCIPAL"), for the public work described as _____ _____ (the "WORK"). The contract ("AGREEMENT"), for the public work described above, and all of its terms and conditions are incorporated by reference and made a part hereof; and

WHEREAS, the PRINCIPAL is required to furnish a bond in connection with the AGREEMENT guaranteeing payment of persons who provide labor and material; and

NOW, THEREFORE, we the undersigned PRINCIPAL and _____ _____, a _____, admitted and duly authorized to transact business under the laws of the State of California, as SURETY ("SURETY"), are held and firmly bound unto the CITY or its successors and assigns in the sum of _____ dollars ($_____) (which amount is not less than 100% of the AGREEMENT price) to be paid to the CITY or its successors and assigns; and for which payment, well and truly to be made, we bind ourselves, our heirs, executors and administrators, successors or assigns jointly and severally, firmly by these presents.

The condition of the obligation is such that if the PRINCIPAL, its subcontractors, heirs, executors, administrators, successors or assigns fails to pay any of the persons named in Section 8004 or 9100 of the Civil Code of the State of California, or the amounts due under the Unemployment Insurance Code of the State of California, or any amounts required to be deducted, withheld and paid over to the Employment Development Department from the wages of employees of the PRINCIPAL and its subcontractors pursuant to Section 13020 of the Unemployment Insurance Code, with respect to work or labor performed by any such claimant, that the SURETY will pay for the same, in an amount not exceeding the sum specified in this bond, and also, in case suit is brought upon the bond, shall pay reasonable attorneys' fees, to be fixed by the Court.

This bond shall inure to the benefit of any and all persons, companies, and corporations entitled to file a Stop Payment Notice pursuant to the provisions of Section 9350 et seq. of the Civil Code of the State of California, so as to give a right of action to them or their assigns in any suit brought upon this bond.

FOR COUNCIL APPROVAL ONLY

No prepayment or delay in payments, and no change, extension, addition or alteration of any provision of the AGREEMENT or in the specifications agreed to between the PRINCIPAL and the CITY, or any forbearance on the part of the CITY shall operate to relieve the SURETY. The SURETY hereby waives the provisions of Section 2819 of the California Civil Code. The SURETY waives all rights of subrogation against the CITY or any person employed by the CITY. If the contract price increases by the issuance of change orders, the amount specified in this bond shall increase by the same amount.

As part of the obligation secured hereby and in addition to the face amount specified therefore, there shall be included costs and reasonable expenses and fees, including reasonable attorneys' fees, incurred by CITY in successfully enforcing such obligation, all to be taxed as costs and included in any judgment rendered.

IN WITNESS WHEREOF, this instrument has been duly executed by the PRINCIPAL and SURETY above-named, on the _____ day of _____, 20__.

FOR COUNCIL APPROVAL ONLY

PRINCIPAL:

BY:_____

PRINT NAME: _____

PRINT TITLE: _____

AND

BY: _____

PRINT NAME: _____

PRINT TITLE:_____

SURETY:

BY:_____

PRINT NAME: _____

PRINT TITLE:_____

MAILING ADDRESS:

_____

_____

_____

(Notarization by Surety and copy of Power of Attorney required.)

APPROVED AS TO FORM:

BY: _____
City Attorney

CITY OF ROSEVILLE

GENERAL CONDITIONS

FOR

BUILDINGS AND GROUNDS

FOR COUNCIL APPROVAL ONLY

CITY OF ROSEVILLE
GENERAL CONDITIONS
FOR
BUILDINGS AND GROUNDS

SECTION 1: DEFINITIONS AND TERMS GC-1:1

1-1.01	GENERAL	GC-1:1
1-1.02	ACCEPTANCE	GC-1:1
1-1.03	ADDENDUM	GC-1:1
1-1.04	AS-BUILT DOCUMENTS, AS-BUILT DRAWINGS AND RECORD DOCUMENTS	GC-1:1
1-1.05	ASSESSMENT	GC-1:1
1-1.06	BENEFICIAL OCCUPANCY	GC-1:2
1-1.07	BID GUARANTY	GC-1:2
1-1.08	BIDDER	GC-1:2
1-1.09	BIDDING DOCUMENTS	GC-1:2
1-1.10	CHANGE ORDER	GC-1:2
1-1.11	CITY	GC-1:2
1-1.12	CITY ATTORNEY	GC-1:2
1-1.13	CITY CLERK	GC-1:2
1-1.14	CLAIM	GC-1:2
1-1.15	CONSTRUCTION SCHEDULE	GC-1:3
1-1.16	CONTRACT OR AGREEMENT	GC-1:3
1-1.17	CONTRACT CONDITIONS	GC-1:3
1-1.18	CONTRACT DOCUMENTS	GC-1:3
1-1.19	CONTRACT DRAWINGS	GC-1:3
1-1.20	CONTRACT PRICE	GC-1:4
1-1.21	CONTRACT TIME	GC-1:4
1-1.22	CONTRACTOR	GC-1:4
1-1.23	DAY OR DAYS	GC-1:4
1-1.24	DEPARTMENT	GC-1:4
1-1.25	DIRECT COSTS	GC-1:4
1-1-26	DIRECTOR.	GC-1:6
1-1.27	EMERGENCY.	GC-1:6
1-1.28	ENGINEER OR ARCHITECT	GC-1:7
1-1.29	FINAL COMPLETION	GC-1:7
1-1.30	FORCE ACCOUNT	GC-1:7
1-1.31	GENERAL NOTES	GC-1:7
1-1.32	INSTALLATION, INSTALL	GC-1:7
1-1.33	LABORATORY	GC-1:7
1-1.34	LEGAL HOLIDAYS	GC-1:7
1-1.35	LIQUIDATED DAMAGES	GC-1:7
1-1.36	NOTICE OF COMPLETION	GC-1:8
1-1.37	NOTICE TO PROCEED	GC-1:8
1-1.38	NOTICE OF TERMINATION	GC-1:8

FOR COUNCIL APPROVAL ONLY

1-1.39 OVERHEAD....GC-1:8
1-1.40 PREMISES....GC-1:9
1-1.41 PROFESSIONAL ENGINEER....GC-1:9
1-1.42 PROJECT MANUAL....GC-1:9
1-1.43 PROPOSAL FORMS....GC-1:9
1-1.44 REQUEST FOR INFORMATION (RFI)....GC-1:9
1-1.45 SAFETY....GC-1:9
1-1.46 SCHEDULE OF VALUES....GC-1:9
1-1.47 SHOP DRAWINGS....GC-1:10
1-1.48 SPECIFICATIONS....GC-1:10
1-1.49 SUBCONTRACTOR....GC-1:10
1-1.50 SUBMITTALS....GC-1:10
1-1.51 SUPPLEMENTAL CONDITIONS....GC-1:10
1-1.52 SUPPLIER....GC-1:10
1-1.53 WORK....GC-1:11
1-1.54 WORK SITE....GC-1:11
1-1.55 WORKING DRAWINGS....GC-1:11

SECTION 2: CONTROL AND SCOPE OF THE WORK....GC-2:1

2-1.01 AUTHORITY OF DIRECTOR....GC-2:1
2-1.02 INTENT OF CONTRACT DOCUMENTS....GC-2:1
2-1.03 EXAMINATION AND VERIFICATION OF CONTRACT DOCUMENTS....GC-2:2
2-1.04 CONTRACT DRAWINGS....GC-2:3
2-1.05 COORDINATION AND INTERPRETATION OF CONTRACT DOCUMENTS....GC-2:3
2-1.06 INDEPENDENT CONTRACTOR STATUS....GC-2:5
2-1.07 ORDER OF WORK....GC-2:5
2-1.08 SUBMITTALS....GC-2:5
2-1.08A SHOP DRAWINGS....GC-2:6
2-1.08B DESCRIPTIVE DATA....GC-2:7
2-1.08C SAMPLES....GC-2:7
2-1.08D MANUALS, INSTRUCTIONS AND AFFIDAVIT....GC-2:7
2-1.08E ALTERNATIVES....GC-2:10
2-1.09 DISPOSAL OF MATERIAL OUTSIDE THE WORK SITE....GC-2:12
2-1.10 ACCESS TO THE WORK....GC-2:12
2-1.11 TEMPORARY UTILITIES....GC-2:12
2-1.12 UTILITY FACILITIES....GC-2:13
2-1.13 PRESERVATION AND CLEANING....GC-2:14
2-1.14 LIMITATIONS ON WORK SITE AND PREMISES....GC-2:14
2-1.15 DUST CONTROL....GC-2:15
2-1.16 SANITATION....GC-2:15
2-1.17 NIGHT WORK AND NORMAL WORKING HOURS....GC-2:15
2-1.18 LINES AND GRADES....GC-2:16
2-1.19 ARCHEOLOGICAL DISCOVERIES....GC-2:17
2-1.20 PRESERVATION OF MONUMENTS....GC-2:17
2-1.21 CONFORMITY WITH CONTRACT DOCUMENTS....GC-2:18

FOR COUNCIL APPROVAL ONLY

2-1.22 FINAL CLEANUP GC-2:18
2-1.23 AS-BUILT DOCUMENTS AND DRAWINGS GC-2:18
2-1.24 SUPERINTENDENCE GC-2:19
2-1.25 CHARACTER OF WORKER GC-2:20
2-1.26 INSPECTION GC-2:20
2-1.27 REMOVAL OF REJECTED AND UNAUTHORIZED WORK GC-2:21

SECTION 3: CHANGES IN THE WORK GC-3:1

3-1.01 CHANGES GC-3:1
3-1.02 PROPOSED CHANGE ORDERS GC-3:2
3-1.03 EMERGENCY AND INDETERMINATE TYPE CHANGE ORDERS GC-3:3
3-1.04 EXECUTED CHANGE ORDER GC-3:3
3-1.05 CONTRACT PRICE ADJUSTMENT GC-3:3
3-1.06 FORCE ACCOUNT PAYMENT GC-3:5
***3-1.06A LABOR* GC-3:6**
***3-1.06B MATERIALS* GC-3:6**
***3-1.06C EQUIPMENT* GC-3:7**
***3-1.06D MARKUPS* GC-3:8**
***3-1.06E RECORDS* GC-3:9**
3-1.07 COST REDUCTION PROPOSALS GC-3:11

SECTION 4: CONTROL OF MATERIALS GC-4:1

4-1.01 MATERIALS GC-4:1
4-1.02 PRODUCT AND REFERENCE STANDARDS GC-4:2
4-1.03 SAMPLING AND TESTING OF MATERIALS GC-4:2
4-1.04 CERTIFICATES OF COMPLIANCE GC-4:7

SECTION 5: LEGAL RELATIONS AND RESPONSIBILITY GC-5:1

5-1.01 LAWS TO BE OBSERVED GC-5:1
5-1.02 HOURS OF LABOR GC-5:1
5-1.03 NONDISCRIMINATION GC-5:2
5-1.04 PREVAILING WAGE GC-5:3
5-1.05 REGISTRATION REQUIRED AS QUALIFICATION TO BID GC-5:6
5-1.06 PAYROLL RECORDS GC-5:7
5-1.07 SAFETY REQUIREMENTS GC-5:10
5-1.08 SUBSURFACE EXCAVATIONS, NOTIFICATION GC-5:15
5-1.09 PUBLIC SAFETY GC-5:15
5-1.10 EMERGENCIES GC-5:17
5-1.11 APPRENTICES GC-5:18
5-1.12 FAIR LABOR STANDARDS ACT GC-5:18
5-1.13 WORKERS' COMPENSATION GC-5:19
5-1.14 AIR POLLUTION CONTROL AND ASBESTOS GC-5:19
5-1.15 USE OF PESTICIDES GC-5:20
5-1.16 SOUND AND LIGHT CONTROL REQUIREMENTS GC-5:20
5-1.17 WEIGHT LIMITATIONS GC-5:21
5-1.18 ENVIRONMENTAL CLEARANCES; MITIGATION MONITORING PROGRAMS; AND REGULATORY AGENCY PERMIT

FOR COUNCIL APPROVAL ONLY

REQUIREMENTS GC-5:21
5-1.19 PERMITS AND LICENSES GC-5:21
5-1.20 WATER POLLUTION GC-5:22
5-1.21 PROTECTION AND USE OF PROPERTY GC-5:23
5-1.22 RESPONSIBILITY FOR DAMAGE AND INDEMNIFICATION GC-5:24
5-1.23 INSURANCE COVERAGE GC-5:26
5-1.24 OTHER INSURANCE PROVISIONS GC-5:31
5-1.25 THIRD PARTY BENEFICIARY GC-5:33
5-1.26 COORDINATION AND ACCESS GC-5:33
5-1.27 OCCUPANCY BY THE DEPARTMENT PRIOR TO ACCEPTANCE GC-5:34
5-1.28 RIGHT TO OPERATE UNSATISFACTORY FACILITIES AND EQUIPMENT GC-5:35
5-1.29 CONTRACTOR'S RESPONSIBILITY FOR THE WORK GC-5:36
5-1.30 RESPONSIBILITY FOR UTILITIES GC-5:37
5-1.31 PROPERTY RIGHTS IN MATERIALS GC-5:39
5-1.32 COURT ORDERED DELAY GC-5:39
5-1.33 NO PERSONAL LIABILITY GC-5:39
5-1.34 RIGHTS IN LAND AND IMPROVEMENTS GC-5:40
5-1.35 ANTITRUST CLAIMS GC-5:40
5-1.36 RIGHTS TO DRAWINGS, TECHNICAL DATA PATENTS GC-5:40
5-1.37 PAYMENT OF TAXES GC-5:41
5-1.38 GRATUITIES AND CONFLICT OF INTEREST GC-5:42
5-1.39 COOPERATION GC-5:43
5-1.40 DIGGING TRENCHES OR OTHER EXCAVATIONS GC-5:43
5-1.41 CONTRACTOR REGISTRATION GC-5:44
5-1.42 CITY OF ROSEVILLE ENCROACHMENT PERMITS AND RIGHTS-OF-WAY GC-5:45

SECTION 6: PROSECUTION AND PROGRESS GC-6:1

6-1.01 SUBLETTING AND SUBCONTRACTING GC-6:1
6-1.02 ASSIGNMENT GC-6:2
6-1.03 BEGINNING OF WORK GC-6:2
6-1.04 PROGRESS SCHEDULE. GC-6:3
6-1.05 SCHEDULE OF VALUES GC-6:9
6-1.06 CITY'S RIGHT TO STOP WORK GC-6:9
6-1.07 TIME OF COMPLETION GC-6:11
6-1.08 LIQUIDATED DAMAGES GC-6:12
6-1.09 DELAYS AND EXTENSIONS TO THE WORK GC-6:13
6-1.10 TERMINATION GC-6:18
6-1.10A TERMINATION OF AGREEMENT – CONVENIENCE OF CITY. GC-6:18
6-1.10B TERMINATION OF AGREEMENT - FOR CAUSE GC-6:21

SECTION 7: ACCEPTANCE AND PAYMENT GC-7:1

7-1.01 ACCEPTANCE GC-7:1
7-1.02 SCOPE OF PAYMENT GC-7:2
7-1.03 NOTICE OF POTENTIAL CLAIM GC-7:2
7-1.04 CLAIMS GC-7:5

FOR COUNCIL APPROVAL ONLY

7-1.05 DISPUTE RESOLUTION PROCEDURE GC-7:6
7-1.06 STOP PAYMENT NOTICES GC-7:7
7-1.07 PROGRESS PAYMENTS GC-7:7
7-1.08 PAYMENT FOR MATERIALS AND EQUIPMENT ON HAND GC-7:9
7-1.09 RETENTION ON PROGRESS PAYMENTS GC-7:11
7-1.10 FINAL PAYMENT GC-7:12
7-1.11 CLERICAL ERRORS GC-7:14
7-1.12 WARRANTY GC-7:14
7-1.13 WARRANTY OF TITLE GC-7:16

FOR COUNCIL APPROVAL ONLY

SECTION 1

DEFINITIONS AND TERMS

1-1.01 **GENERAL.** When the following abbreviations and terms or pronouns in place of them appear in the Contract Documents, the intent and meaning shall be interpreted as provided in this Section 1.

1-1.02 **ACCEPTANCE.** Formal Acceptance by resolution by the Roseville City Council of the Contract when completed in all respects in accordance with the Contract Documents and any modifications previously approved.

1-1.03 **ADDENDUM.** Written interpretation or revision to any of the Contract Documents issued by the City before the bid opening.

1-1.04 **AS-BUILT DOCUMENTS, AS-BUILT DRAWINGS AND RECORD DOCUMENTS.** As-Built Documents, As-Built Drawings and Record Documents are all contract documents modified to reflect changes during the construction phase. Specifically, As-Built Documents/Drawings are a revised set of drawings submitted by the Contractor upon Final Completion of a project. They reflect changes made in the Specifications and Working Drawings during the construction process, and show the exact dimensions, geometry, and location of all elements of the work completed under the Contract. Record Documents, on the other hand, are compiled by the Engineer or Architect based on the As-Built Documents/Drawings submitted by the Contractor. They reflect the Engineer or Architect's concurring review of what changes were denoted, why they were made and where they occurred and create a record set of drawings.

1-1.05 **ASSESSMENT.** A cost imposed on the Contractor for non-compliance

FOR COUNCIL APPROVAL ONLY

with certain contractual requirements.

1-1.06 **BENEFICIAL OCCUPANCY.** The taking possession of a portion of the Work by the City for its use and/or occupancy on other than a temporary or emergency basis.

1-1.07 **BID GUARANTY.** The cashier's, certified check, irrevocable standby letter of credit, deposit of securities, or Bidder's Bond, accompanying the bid submitted by the Bidder, as a guaranty that the Bidder will enter into an agreement with the City for the performance of the Work, if the Agreement is awarded to Bidder, and the Bidder will submit the required Contract Bonds and Certificate of Insurance. Also referred to as the Bidder's Security.

1-1.08 **BIDDER.** Individual, firm, partnership, limited liability company, corporation, joint venture, or any combination thereof, submitting a Proposal for the Work, acting directly, or through a duly authorized representative.

1-1.09 **BIDDING DOCUMENTS.** Includes the Notice to Bidders, Bidding Requirements, Contract Conditions, Drawings, and Addenda.

1-1.10 **CHANGE ORDER.** Any written order to the Contractor directing an addition, deletion, or modification of the Work, or an adjustment in the Contract Price or Contract Time provided in the Contract Documents and issued after the Agreement has been signed.

1-1.11 **CITY.** The City of Roseville.

1-1.12 **CITY ATTORNEY.** The City Attorney of the City.

1-1.13 **CITY CLERK.** The City Clerk of the City.

1-1.14 **CLAIM.** A separate demand by Contractor sent by registered mail or certified mail with return receipt requested, for one or more of the following: (a) a time extension, including, without limitation, for relief for damages or penalties for delay assessed by

FOR COUNCIL APPROVAL ONLY

the City; (b) payment by the City of money or damages arising from work done by, or on behalf of, Contractor pursuant to the Contract Documents and payment for which is not otherwise expressly provided or to which Contractor is not otherwise entitled; and (c) payment of an amount that is disputed by the City.

1-1.15 **CONSTRUCTION SCHEDULE.** A list or graphic display of construction activities required for completing the Work, in a format required by the Contract Documents. The duration, start and finish date, and sequence of significant activities, critical path, float and milestones must be indicated in the Construction Schedule.

1-1.16 **CONTRACT OR AGREEMENT.** The written agreement relating to the Work to be performed, the labor, materials, and equipment to be furnished, and the payment to be made therefor. The Agreement/Contract is part of and incorporates all of the Contract Documents.

1-1.17 **CONTRACT CONDITIONS.** Includes the General Conditions, Supplemental Conditions, and Specifications.

1-1.18 **CONTRACT DOCUMENTS.** Includes those documents that form the basis of the Contract, including but not limited to, Bidding Documents, the Bid or Proposal, Contract Bonds, the Contract, all required insurance certificates or endorsements, all bonds, all required certifications or statements, Change Orders, any Contract Amendment, any City Standard which is incorporated by reference and these City of Roseville General Conditions for Buildings and Grounds.

1-1.19 **CONTRACT DRAWINGS.** The official drawings including plans, elevations, sections, detail drawings, diagrams, plated, General Notes, information and schedules thereon, or exact reproductions thereof, showing the location, character, dimension, and details

FOR COUNCIL APPROVAL ONLY

of the Work. The Contract Drawings include any drawings or plates bound within the Supplemental Conditions.

1-1.20 **CONTRACT PRICE.** The total compensation to be paid to the Contractor in accordance with the terms of the Agreement.

1-1.21 **CONTRACT TIME.** The number of Days, or portion thereof, allowed for completion of the Work, including all authorized time extensions. The effective date for commencement of the Work specified in the Notice to Proceed shall define the beginning of the Contract Time.

1-1.22 **CONTRACTOR.** Individual, firm, partnership, limited liability company, corporation, joint venture, or any combination thereof, who has entered into the Agreement with City.

1-1.23 **DAY OR DAYS.** Unless otherwise designated, Day or Days as used in the Contract Documents will be understood to mean calendar Day or Days.

1-1.24 **DEPARTMENT.** The Department for Contract Administration, as identified in the Supplemental Conditions.

1-1.25 **DIRECT COSTS.** Those cost items (including labor, materials, equipment and any subcontractor's work) that are used in the actual performance of, and are specifically and uniquely attributable to the Work or changed Work. Direct Costs do not include Overhead. Direct Costs only include the following:

A. Payroll costs for employees in the direct employ of Contractor in the performance of the Work under schedules of job classifications agreed upon by City and Contractor. Payroll costs for employees not employed full time on the Work shall be apportioned on the basis of their time spent on the Work. Payroll costs shall include salaries and

FOR COUNCIL APPROVAL ONLY

wages plus the cost of fringe benefits which shall include social security contributions, unemployment, excise and payroll taxes, workers' compensation, health and retirement benefits, sick leave, vacation and holiday pay applicable thereto. Such employees may include superintendents and foremen at the site. The expenses of performing work after regular working hours, on Saturday, Sunday or legal holidays shall be included in the above only to the extent authorized by City in writing.

B. Cost of all materials and equipment furnished and incorporated in the Work, including costs of transportation and storage thereof, and suppliers' field services required in connection therewith. All trade discounts, rebates and refunds and all returns from sale of surplus materials and equipment shall accrue to City, and Contractor shall make provisions so that they may be obtained.

C. Payments made by Contractor to the subcontractors for work performed by subcontractors. If required by City, Contractor shall obtain competitive bids from subcontractors acceptable to Contractor and shall deliver such bids to City who will then determine which bids will be accepted. If a subcontract provides that the subcontractor is to be paid on the basis of cost of the work plus a fee, the subcontractor's cost of the work shall be determined in the same manner as Contractor's cost of the work. All subcontracts shall be subject to the other provisions of the Contract Documents insofar as applicable.

D. Costs of special consultants (including engineers, architects, testing laboratories, surveyors, and accountants) employed for services specifically, and only, related to the Work.

E. Supplemental costs including the following:

1. The proportion of necessary transportation, travel and subsistence

FOR COUNCIL APPROVAL ONLY

expenses of Contractor's employees incurred in discharge of duties connected with the Work.

2. Cost, including transportation and maintenance, of all materials, supplies, equipment, machinery, appliances, office and temporary facilities at the site and hand tools not owned by the workers, which are consumed in the performance of the Work, and cost, less market value of such items used but not consumed which remain the property of Contractor.

3. Rentals of all construction equipment and machinery and the parts thereof whether rented from Contractor or others in accordance with rental agreements approved by City, and the costs of transportation, loading, unloading, installation, dismantling and removal thereof, all in accordance with terms of said rental agreements. The rental of any such equipment, machinery or parts shall cease when the use thereof is no longer necessary for the Work.

4. Sales, consumer, use or similar taxes related to the Work, and for which Contractor is liable, imposed by laws and regulations.

5. The cost of utilities (including the meter and all associated installation costs), fuel and sanitary facilities at the site.

6. Cost of premiums for additional bonds and insurance required because of changes in the Work.

1-1-26 **DIRECTOR.** Director of the Department for Contract Administration or his or her designee.

1-1.27 **EMERGENCY.** Any sudden generally unforeseen occurrence (such as a fire, flood, storm, earthquake, civil disorder, or other natural and/or man-made disaster) that has the potential to adversely affect the safety of life, the Work, and/or adjacent property; to interrupt contracts essential to the performance of the Work; and/or to cause catastrophic failure of City

FOR COUNCIL APPROVAL ONLY

equipment and/or facilities.

1-1.28 **ENGINEER OR ARCHITECT.** Professional Engineer or Architect designated for a particular project responsible for signing and sealing the permit drawings, interpretation of the drawings where ambiguities exist, review of requests for information, design Change requests and Shop Drawings, resolution of errors and omissions, and finalization of Record Documents.

1-1.29 **FINAL COMPLETION.** When the project has been completed according to the terms and conditions set forth in the Contract Documents. Final Completion is not the same as Acceptance.

1-1.30 **FORCE ACCOUNT.** Payment by force account shall mean payment on the basis of the Contractor's time and materials.

1-1.31 **GENERAL NOTES.** The written instructions, provisions, conditions or other requirements appearing on the Contract Drawings and so identified thereon, which pertain to the performance of the Work.

1-1.32 **INSTALLATION, INSTALL.** Completely assembling, erecting, and/or connecting materials, parts, components, supplies, and related equipment specified or required for the completion of the Work.

1-1.33 **LABORATORY.** Established professional laboratories authorized by the City to test materials and Work involved in the Contract.

1-1.34 **LEGAL HOLIDAYS.** Those days designated as Federal holidays or declared by the City, or otherwise specified in the Contract Documents.

1-1.35 **LIQUIDATED DAMAGES.** The amount prescribed in the Contract Documents to be paid to the City or to be deducted from any payments due or to become due the

FOR COUNCIL APPROVAL ONLY

Contractor for each day's delay in completing the whole or any specified portion of the Work beyond the time allowed in the Supplemental Conditions.

1-1.36 **NOTICE OF COMPLETION.** A legal notice filed by the City with the Placer County Recorder's Office stating that construction has been completed and accepted by the City.

1-1.37 **NOTICE TO PROCEED.** A written notice given by the City to the Contractor fixing the date on which the Contract Time will commence to run.

1-1.38 **NOTICE OF TERMINATION.** Written notice from the City to the Contractor and/or its Surety terminating the Agreement, or a portion thereof, either for convenience of the City or for default due to the Contractor's failure to perform its contractual obligations.

1-1.39 **OVERHEAD.** Business or administrative expenses (including but not limited to office expenses, administrative staff, rent, insurance, utilities) not chargeable to a particular part of the Work. The term "Overhead" shall include all of the following:

A. Payroll costs and other compensation of Contractor's officers, executives, principals (of partnerships and sole proprietorships), general managers, engineers, architects, estimators, attorneys, auditors, accountants, purchasing and contracting agents, expediters, timekeepers, clerks, and other personnel employed by Contractor whether at the Work Site or in Contractor's principal or a branch office for general administration of the Work and not specifically included in the agreed upon schedule of job classifications, all of which are to be considered administrative costs covered by the Contractor's fee.

B. Expenses of Contractor's principal and branch offices other than Contractor's office at the site.

FOR COUNCIL APPROVAL ONLY

C. Any part of Contractor's capital expenses, including interest on Contractor's capital employed for the Work and charges against Contractor for delinquent payments.

D. Cost of premiums for all bonds and for all insurance whether or not Contractor is required by the Contract Documents to purchase and maintain the same, except as provided in section 1-1.25.

E. Other overhead or general expense costs of any kind.

1-1.40 **PREMISES.** Shall mean the area within construction easements, easements, rights of entry and City owned property which surrounds the Work Site, limited by the property lines thereof. In some cases Premises may coincide with the Work Site.

1-1.41 **PROFESSIONAL ENGINEER.** An engineer licensed by the Board of Registration for Professional Engineers, State of California.

1-1.42 **PROJECT MANUAL.** A book containing all Contract Documents.

1-1.43 **PROPOSAL FORMS.** The approved forms upon which the City requires that each Bidder submit its bid with regard to the Agreement.

1-1.44 **REQUEST FOR INFORMATION (RFI).** A document issued by the Contractor requesting information concerning the Contract Documents.

1-1.45 **SAFETY.** Includes the practice of identifying potential hazards, assessing their risk, taking corrective action where possible, including and providing control measures such as engineering design, written procedures, and the personal protective equipment for workers in order to eliminate or reduce the risk for exposure in the workplace.

1-1.46 **SCHEDULE OF VALUES.** The breakdown of the Contract Price that will serve as the basis for Contractor's Applications of Payment. Any lump sum bid item

FOR COUNCIL APPROVAL ONLY

included within the Contract Price will be apportioned among values relating to specific components of the Work covered by said lump sum.

1-1.47 **SHOP DRAWINGS.** Drawings, plans, diagrams, schedules, and other data specifically prepared and submitted to the City by the Contractor, showing in detail: (a) the proposed fabrication and assembly of a special component of the Work; and (b) the Installation (form, fit and attachment details) of a special component of the Work. Shop Drawings shall be deemed to include Working Drawings, Product Data, literature, and applicable performance and test data.

1-1.48 **SPECIFICATIONS.** The technical Specifications for the Work prepared by the Director or an Engineer or Architect describing in detail the nature of the Work, its components, any performance standards, and how the Work is to be constructed.

1-1.49 **SUBCONTRACTOR.** Any individual, firm, partnership, limited liability company, corporation, joint venture, or combination thereof, other than employees of the Contractor, engaged by the Contractor to furnish services, labor, equipment and materials for a portion of the Work.

1-1.50 **SUBMITTALS.** Those documents required to be submitted by the Contractor for review by the City in accordance with the Contract Documents.

1-1.51 **SUPPLEMENTAL CONDITIONS.** The Supplemental Conditions are specific clauses modifying or supplementing these General Conditions.

1-1.52 **SUPPLIER.** Any individual, firm, partnership, limited liability company, corporation, joint venture, or combination thereof, other than employees of the Contractor, that supplies a tangible product as a portion of the Work, with services usually limited to delivery and/or required testing, and with manufacturing, fabrication, or production facilities located off

FOR COUNCIL APPROVAL ONLY

the Work Site.

1-1.53 **WORK.** The furnishing of all labor, and the furnishing and Installing of all materials, articles, supplies and equipment as specified, designated, or required by the Contract Documents.

1-1.54 **WORK SITE.** All or portion of the Premises that the Work is limited to as shown on the Contract Drawings or designated by the Director. Public streets are not included unless Work is being done within the street right-of-way.

1-1.55 **WORKING DRAWINGS.** Original drawings prepared by the Contractor and/or its Subcontractors or Suppliers, of any tier, illustrating Work required for construction that will not become an integral part of the completed Work. This includes, but is not limited to, drawings for temporary structures such as decking, bulkheads, excavation supports, utility support, groundwater control, forming, falsework, access roads, staging areas, staging plans, and diversion plans. A Working Drawing is one type of a Shop Drawing.

FOR COUNCIL APPROVAL ONLY

SECTION 2

CONTROL AND SCOPE OF THE WORK

2-1.01 **AUTHORITY OF DIRECTOR.** The Contract shall be performed in a manner satisfactory to the Director who shall decide all questions which may arise as to the quality or acceptability of materials furnished and Work performed and as to the manner of performance and rate of progress of the Work; all questions which may arise as to the interpretation of the Contract Documents; all questions as to the acceptable fulfillment of the Contract on the part of the Contractor; and all questions as to compensation. The Director shall have authority to enforce and make effective such decisions and orders in the event the Contractor fails to promptly carry out the same.

2-1.02 **INTENT OF CONTRACT DOCUMENTS.** The Contract Documents are complementary, and what is called for by one shall be as binding as if called for by all. The intent of the Contract Documents is to describe the details for the construction and completion of the Work. Where the Contract Documents describe portions of the Work in general terms, but not in complete detail, it is understood that only the best general practice shall be followed and that only materials and workmanship of the best quality are to be used. Any Work, materials, or equipment that are customarily provided, or that are reasonably inferable from the Contract Documents as being required to produce the intended result, shall be supplied, whether or not specifically called for. When words, which have a well-known technical or trade meaning are used to describe work, materials, or equipment, such words shall be interpreted in accordance with that meaning. Unless otherwise specified, the Contractor shall furnish all labor, materials, tools, equipment, and incidentals, and do all the Work involved in executing the Contract in a

FOR COUNCIL APPROVAL ONLY

satisfactory and workmanlike manner.

Reference to standard specifications, manuals or codes of any technical society, organization or association, or to the laws or regulations of any governmental authority, whether such reference be specific or by implication, shall mean the latest standard specification, manual, code, laws, or regulations in effect on the first published date of the Notice to Contractors, except as may be otherwise specifically stated. However, no provision of any referenced standard specification, manual or code (whether or not specifically incorporated by reference in the Contract Documents) shall be effective to change the duties and responsibilities of City or Contractor, or any of their consultants, agents, or employees from those set forth in the Contract Documents, nor shall it be effective to assign to City, or City's designated representative, any duty or authority to supervise or direct the furnishing or performance of the Work or any duty or authority to undertake responsibility contrary to other provisions of the Contract Documents.

The Contract Documents are divided into parts, divisions, sections and articles for convenience, organization and reference. Generally, there has been no attempt to divide the Specifications sections into work performed by the various building trades, work by separate Subcontractors, or work required for separate facilities in the project.

2-1.03 **EXAMINATION AND VERIFICATION OF CONTRACT DOCUMENTS.** The Contractor shall thoroughly examine and become familiar with all of the various parts of the Contract Documents and shall determine the nature and location of the Work, the general and local conditions (including applicable laws) and all other matters which can in any way affect the cost, progress or performance of the Work under this Agreement. Failure to make an examination necessary for this determination shall not release the Contractor from the obligations of the Agreement. No oral agreement or conversation with any officer, or employee

FOR COUNCIL APPROVAL ONLY

of the City, or with the City's designated representative either before or after the execution of the Agreement, shall affect or modify any of the terms or obligations contained in the Contract Documents.

2-1.04 **CONTRACT DRAWINGS.** The Contract Drawings consist of general drawings and show such plans, elevations, sections, details and schedules as are necessary to give a graphic and pictorial description of the contemplated construction. All authorized alterations affecting the requirements and information given on the Contract Drawings shall be in writing.

2-1.05 **COORDINATION AND INTERPRETATION OF CONTRACT DOCUMENTS.** All Contract Documents are essential parts of the Contract, and a requirement occurring in one is as binding as though occurring in all. They are intended to be complementary, and to describe and provide for a complete Work.

In the event of inconsistencies between requirements contained in different components of the Contract Documents, the precedence of the Contract Documents shall be as follows to resolve conflicts:

1. Change Orders
2. The Contract (including Addenda)
3. The Supplemental Conditions
4. Specifications
5. Contract Drawings
6. The General Conditions

Should it appear that the Work to be done or any of the matters relative thereto are not sufficiently detailed or explained in the Contract Documents, the Contractor shall submit a

FOR COUNCIL APPROVAL ONLY

Request for Information ("RFI") to the Director for such further explanations as may be necessary and shall conform to the written explanation given as if part of the Contract Documents. The decisions of the Director shall be final.

Contractor shall anticipate that it will be necessary to prepare and submit RFIs regarding the Contract Documents. The City will respond to each RFI by no later than fourteen (14) Days after receipt of the RFI, unless the RFI is of significant complexity. Furthermore, in the event that there are numerous RFIs pending, Contractor shall cooperate with the City in establishing a priority for responding to the RFIs, and potentially some RFIs may be responded to beyond the fourteen (14) Day period.

Each RFI prepared by Contractor shall be full and complete. Contractor shall prepare RFIs so as to not cause any delay to the progress of the Work and to not cause any impact to Contractor's labor productivity in the field. Contractor shall not assert any Claims for delay or interference against the City if Contractor fails to timely submit any RFI to the City, after consideration of the response period allowed for by the City.

The response to an RFI shall not, by itself, constitute a writing that authorizes Contractor to perform any Work that causes an adjustment to either the Contract Price or the Contract Time. If Contractor believes that any response to any RFI should constitute a compensable change, Contractor shall provide a Notice of Potential Claim as provided in Section 7-1.03, below. Contractor's failure to provide the required written notice shall constitute a waiver of the Contractor's right to seek a compensable change based on the RFI response.

The Contractor shall examine all Contract Documents; shall verify all figures in the Contract Documents before laying out the Work; shall promptly notify the City of all errors, inconsistencies, and/or omissions that it discovers; and, in instances where such non-

FOR COUNCIL APPROVAL ONLY

conformities are discovered, shall obtain specific instructions in writing from the City before proceeding with the Work. Contractor's performance of any Work affected by such non-conformities prior to the City's decision shall be at the Contractor's risk. Any Work that is customarily provided or that is reasonably inferable shall not relieve the Contractor from performing such work at no additional expense and/or delay, and such Work shall be performed as if fully set forth in the Contract Documents.

2-1.06 **INDEPENDENT CONTRACTOR STATUS.** The Contractor shall independently perform all Work required by the Contract Documents and shall not be considered as an agent or employee of the City, nor shall the Contractor's Subcontractors or employees be considered as subagents of the City.

The Contractor and Contractor's Subcontractors shall be licensed in accordance with the laws of the State of California and as more particularly described in the bidding documents or elsewhere in the Contract Documents.

2-1.07 **ORDER OF WORK.** When required by the Contract Documents, the Contractor shall follow the sequence of operations set forth therein. Full compensation for conforming to such requirements will be considered as included in the prices paid for the various Contract items of work, and no additional compensation will be allowed therefor.

2-1.08 **SUBMITTALS.** It shall be the Contractor's responsibility to timely submit, so as to cause no delay in the Work, all Shop Drawings, descriptive data, manuals, instructions, affidavits, samples for the various trades as required by the Supplemental Conditions and Specifications, and offers of alternatives, if any. Such Submittals shall be checked and coordinated by the Contractor with the Work of other trades involved before they are submitted to the Director for examination.

FOR COUNCIL APPROVAL ONLY

The Contractor shall deliver at least one (1) electronic copy of the Submittals to the Director, and one (1) hard copy if requested. Work requiring the submittal of working drawings, descriptive data or samples shall not begin prior to approval of said Submittal by the Director.

The time allowed for review of each Submittal will be as indicated in the Supplemental Conditions. Review time will start upon receipt of the Submittal by the Director and will end upon the Director's mailing of the Submittals to the Contractor. Defective, incomplete or partial Submittals will be returned to the Contractor unreviewed.

Submittals shall be made by a letter of transmittal that shall contain a list of all matter submitted and identification of all variations from the Contract Documents contained in the Submittal. The letter and all items accompanying the same shall be fully identified as to project name and location, Contractor's name, district, county, and Contract number, with ample cross-references to the Contract Documents, to facilitate identification of items and their location in the Work.

All Shop Drawings and supporting data, catalogs, schedules, shall be submitted as the instruments of the Contractor, who shall be responsible for their accuracy and completeness. These Submittals may be prepared by the Contractor, Subcontractors, or Suppliers, but the Contractor shall ascertain that Submittals meet all of the requirements of the Contract Documents, while conforming to structural, space, and access conditions at the point of Installation. The Contractor shall check all Submittals before submitting them to the Director.

2-1.08A **SHOP DRAWINGS.** The Contractor shall submit an electronic copy (searchable PDF) of all Shop Drawings required by the Supplemental Conditions or Specifications, and one (1) hard copy, if requested by the Director. Shop Drawings shall also be provided separately in AutoCAD format using the latest version of AutoCAD. An electronic

FOR COUNCIL APPROVAL ONLY

copy will be returned to the Contractor either approved for use, as demonstrated by a stamp, or returned for correction and resubmittal. Materials, colors and/or samples will not be returned to the Contractor. Shop Drawings include any drawing, which requires execution by a draftsman as distinguished from printed matter. The size of Shop Drawings shall not exceed twenty-four inches (24") by thirty-six inches (36").

2-1.08B **DESCRIPTIVE DATA.** The Contractor shall submit an electronic copy (searchable PDF) of each set of manufacturer's brochures or other data required by the Supplemental Conditions or Specifications, and one (1) hard copy, if requested by the Director. The City will examine such Submittals and return either an electronic copy or a hard copy approved for use or returned for correction and resubmittal.

2-1.08C **SAMPLES.** The Contractor shall submit samples of articles, materials or equipment as required by the Supplemental Conditions or Specifications. The Work shall be in accordance with the approved samples. Samples shall be removed from City property when directed or may be incorporated in the Work if approved by the Director. Samples not removed by the Contractor will become the property of the City or, at the City's option, will be removed or disposed of by the City at the Contractor's expense.

2-1.08D **MANUALS, INSTRUCTIONS AND AFFIDAVIT.**

A. Manuals and Instructions. Where operation and maintenance manuals are required by the Supplemental Conditions, the Contractor shall submit two (2) sets of manuals, suitably bound, along with two (2) electronic copies in an approved format, to the Director within forty-five (45) Days after favorable review of the equipment or facilities. If operation and maintenance manuals are approved to be provided in PDF format, text shall be provided in searchable PDF format, making proper use of PDF for headings and heading levels,

FOR COUNCIL APPROVAL ONLY

paragraphs, tables, and lists. Submitted operation and maintenance manuals shall be a collected, organized, and indexed set of bookmarked PDF documents comprising each operation and maintenance manual that corresponds to a hardcopy binder. All manuals shall be marked to indicate the specific equipment furnished for this project and shall include at a minimum:

1. Equipment summary form
2. Cover/Title page
3. Table of contents
4. Operating procedures including start-up, shutdown, normal operation, all operating modes, emergency shutdown, and safety precautions
5. Lubrication instructions (if required)
6. Preventative maintenance procedures
7. Troubleshooting and corrective maintenance procedures
8. Reinstallation instructions
9. Overhaul instructions (if applicable)
10. Parts identification list with exploded view and associated cross references
11. Recommended spare parts list
12. Operator safety requirements
13. Electrical and control system wiring drawings, including panel wiring control (ladder) diagrams, logic diagrams, loop diagrams, and interconnection diagrams
14. Panel layout and assembly drawings

FOR COUNCIL APPROVAL ONLY

15. Mechanical drawings

16. Printouts of all software programs and configuration files

17. Factory and field test procedures and results

Operation and maintenance manuals for complex equipment shall also include:

18. Alternate specified operating modes

19. Emergency shutdown instructions

20. Normal shutdown instructions

21. Long term shutdown instructions

Operation and maintenance manuals for systems comprised of separate pieces of equipment shall include a system explanation of items 4, 7, 18, 19, 20, and 21 as well as the instructions for the separate pieces of equipment.

B. Affidavits. Where required in the Supplemental Conditions or Specifications, manufacturers of equipment shall provide field service as a part of this project. Equipment shall not be considered ready for full time operation until after the authorized factory-trained and qualified manufacturer's representative for the specific equipment has checked and adjusted the equipment and certified by written affidavit that the equipment has been properly Installed, tested, adjusted, lubricated, and calibrated, and is ready for full time operation. Acceptable affidavits shall be submitted prior to completion of the Work. Affidavits shall contain the following specific wording:

"The (Name of Equipment) has been properly installed, tested, adjusted, lubricated, and calibrated, and is ready for full time operation. The installation has been inspected and has been found to be in conformance with our (the manufacturer's) standards and requirements."

FOR COUNCIL APPROVAL ONLY

No amplification, dilution, or modification of this specific wording will be permitted.

2-1.08E **ALTERNATIVES.** For convenience in designation in the Contract Documents, certain materials, articles, or equipment may be designated by a brand or a trade name or the name of the manufacturer together with catalog designation or other identifying information, hereinafter referred to generically as "designated by brand name." Except in those instances where the product is designated to match others in use in a particular improvement, either completed or in the course of completion, an alternative material, article, or equipment which is of equal quality and of the required characteristics for the purpose intended may be proposed for use provided the Contractor complies with the following requirements:

A. The Contractor shall submit its proposal for an alternative in writing. Such request shall be made in ample time to permit review and approval without delaying the Work. The Contractor shall not be entitled to an adjustment of the Contract Time or an increase in the Contract Price based on any Contractor-proposed substitution.

B. No such proposal will be considered unless accompanied by complete information and descriptive data, necessary to determine the equality of the offered materials. The Contractor shall satisfy the Director as to the comparative quality, suitability, or performance of the offered material, articles, or equipment. In the event that the Director rejects the use of such alternative materials, articles, or equipment, then one of the particular products designated by brand name shall be furnished.

C. The burden of proof as to the quality and suitability of alternatives shall be upon the Contractor and it shall furnish all information necessary as required by the Director. The Director shall be the sole judge as to the quality and suitability of alternative articles or materials and such decisions shall be final. Where use of an alternative material

FOR COUNCIL APPROVAL ONLY

involves redesign of, or changes to, other parts of the Work, the cost and time required to effect such redesign or changes will be considered in evaluating the suitability of the alternative material. Cost of redesign by the City will be borne by the Contractor.

D. Whenever classification, rating or other certification by a body such as Underwriters Laboratories (UL) or the National Electrical Manufacturers Association (NEMA) is a part of the specification for any material, Contractor's request for use of alternative articles or materials shall be accompanied by reports from the listed or equivalent independent testing Laboratory indicating compliance with the Contract Documents. The cost of all testing required to prove equality of the material proposed shall be borne by the Contractor. Approval of an alternative shall be only for the characteristics or use named in such approval, and shall not be used to change or modify any requirement of the Contract Documents.

E. At its election, the City reserves the right to consider any Contractor proposed substitution as a Cost Reduction Proposal under Section 3-1.07 of these General Conditions in the event that there is a significant savings resulting from the substitution.

The Director will examine, with reasonable promptness, such Submittals, and return of Submittals to the Contractor shall not relieve the Contractor from responsibility for deviations and alternatives from the Contract Documents, nor shall it relieve the Contractor from responsibility for errors in the Submittals. A failure by the Contractor to identify in its letter of transmittal material deviations from the Contract Documents shall void the Submittal and any action taken thereon by the Director. When specifically requested by the Director, the Contractor shall resubmit such Shop Drawings, descriptive data and samples as may be required.

If any mechanical, electrical, structural, or other changes are required for the proper Installation and fit of alternative materials, articles, or equipment, or because of deviations from

FOR COUNCIL APPROVAL ONLY

the Contract, such changes shall not be made without the approval of the Director and shall be made without additional cost to the City.

2-1.09 **DISPOSAL OF MATERIAL OUTSIDE THE WORK SITE.** Unless otherwise stated elsewhere in the Contract Documents, the Contractor shall, at its own cost and expense, make its own arrangements for disposing of materials outside the Work Site.

Except when material is to be disposed of at a landfill or recycling center, when any material is to be disposed of outside the Work Site, the Contractor shall first obtain written permission from the City to dispose of the material at the intended location. The City's approval will be contingent upon the Contractor obtaining a written permit from the property owner on whose property the disposal is to be made. Prior to the disposal of any material at the intended location, the Contractor shall submit such permit or a certified copy thereof to the City, together with a written release from the property owner absolving the City from any and all responsibility related to the disposal of material on said property.

Disposal of Hazardous Materials must be done in accordance with all laws and regulations. Copies of all required regulatory documentation including copies of final manifests shall be supplied to the City.

2-1.10 **ACCESS TO THE WORK.** The Contractor shall satisfy itself that the jurisdictions through which its operations and haul routes pass will permit such operations with respect to the type of vehicle, laden weights, frequency and dimensions of loads, hours of operation and required traffic control. All necessary permits, licenses or bonds shall be obtained and paid for by the Contractor.

2-1.11 **TEMPORARY UTILITIES.** The Contractor shall make its own arrangements with utility companies for any temporary services it may require in performance of

FOR COUNCIL APPROVAL ONLY

the Work and shall pay all costs of these services directly to these utility organizations.

2-1.12 **UTILITY FACILITIES.** The Contractor shall protect from damage those utility facilities that are to remain in place, be Installed, relocated or otherwise arranged.

The Contractor's attention is directed to the possible existence of facilities not shown, and of facilities in a location different from that, which is indicated. The Contractor shall take steps to ascertain the exact location of all facilities prior to doing any Work, which may damage such facilities or interfere with their service. Where the location of a facility is indicated or inferred from the presence of visible facilities such as buildings, meters, and junction boxes, the Contractor shall make such excavations and explorations as are necessary to ascertain the correct location. Unless provided for elsewhere in the Contract Documents, the cost of such excavations and explorations will be considered as a part of the cost of other items of Work and no additional payment will be made. Such excavations and exploratory Work shall not entitle the Contractor to an extension of time.

If the Contractor discovers underground facilities not indicated or inferred from the Contract Documents, the Contractor shall immediately give the Director written notification of the existence of those facilities. The Contractor shall determine the exact location of the underground facilities and the cost of the work will be paid for in accordance with the Contract Documents. The underground facilities shall be protected from damage as directed by the Director and the cost of that work will be paid for as extra work. The Contractor shall, if directed by the Director, repair any damage, which may occur to the underground facilities. The cost of that repair work, not due to the failure of the Contractor to exercise reasonable care, will be paid for as extra work. Damage due to the Contractor's failure to exercise reasonable care shall be repaired at the Contractor's cost and expense.

FOR COUNCIL APPROVAL ONLY

Where it is determined by the City that the rearrangement of an underground facility, the existence of which is not shown on the Contract Drawings, is essential in order to accommodate the Work, the City will provide for the rearrangement of such facility by other forces or, when so ordered by Change Order, such rearrangement shall be performed by the Contractor and will be paid for as provided under a Change Order.

The Contractor shall be responsible for the maintenance of all utility facilities placed by the Contractor in temporary locations, and all utilities within the construction area not required to be relocated but which are required to be shored or supported during the construction period. The cost of such maintenance shall be borne by the Contractor, and no other compensation shall be due the Contractor for this Work.

The cost of providing and maintaining all necessary or required temporary structures, of making any necessary repairs, replacements, or similar operations, or furnishing indemnity or other bonds, if required, and all costs required by this Section shall be paid by the Contractor and shall be included in the prices bid in the schedule for other items of work.

2-1.13 **PRESERVATION AND CLEANING.** The Contractor shall clean up the Work at frequent intervals and at other times when directed by the Director. While finish Work is being accomplished, floors, Work areas and finished areas shall be kept clean, free of dust, construction debris and trash. Upon completion of the Work, the Contractor shall remove from the Premises its construction equipment and any waste materials not previously disposed of, leaving the Premises thoroughly clean and ready for final inspection.

2-1.14 **LIMITATIONS ON WORK SITE AND PREMISES.** The Contractor shall limit its construction operations to the Work Site unless otherwise shown on the Contract Drawings or specified. The Contractor shall perform no operation of any nature over or on the

FOR COUNCIL APPROVAL ONLY

Premises except such operations as are authorized by the Contract Documents or as authorized by the Director.

2-1.15 **DUST CONTROL.** During the performance of all Work under this Contract, the Contractor shall assume all responsibility for dust control and shall furnish all labor, equipment, and means required to carry out proper and efficient measures wherever and whenever dust control is necessary to prevent the operations from producing dust damage and nuisance to persons and property. Any claims resulting from dust damage or nuisance shall be borne solely by the Contractor. The Contractor shall comply with all applicable Air Quality Act requirements.

2-1.16 **SANITATION.** The Contractor shall provide sanitary facilities for all persons working on the Work.

2-1.17 **NIGHT WORK AND NORMAL WORKING HOURS.** Normal working hours at the construction site shall be between the hours of 7:00 a.m. and 7:00 p.m. Monday through Friday. Legal holidays are excluded. Certain utility connections and street operations are anticipated to require night Work by the Contractor during low usage periods. The Contractor may also be required to prosecute the Work at night if, at any time, the Director shall deem it necessary for the progress of the Work, or if emergencies arise. The Contractor shall promptly comply with any such requirements made in writing by the Director. The Contractor will also be permitted to Work at night if Contractor satisfies the Director of the need therefor, in order to maintain the required progress or protect the Work from the elements. Certain activities are required to be performed at night for nominal progress of the Work and/or are specified to be performed at night by other portions of the Supplemental Conditions. When required, ordered, or permitted to Work at night, the Contractor shall provide sufficient and

FOR COUNCIL APPROVAL ONLY

satisfactory lighting and other facilities therefor. The Contractor shall receive no extra payment for night Work, if specified or if required to be performed during the normal progress of the Work, but compensation shall be considered as having been included in the price stipulated for the Work.

If Contractor performs work during weekends, holidays or any non-normal work hours, Contractor shall pay for required City Inspectors.

2-1.18 **LINES AND GRADES.** Unless otherwise provided in the Supplemental Conditions, the Contractor shall lay out all Work, including structures and pipelines, and shall be responsible for any errors resulting therefrom. In all questions arising as to proper location of lines and grades, the Director's decision will be final.

As part of the bid price for the construction of the improvements, the Contractor shall provide and be responsible for the layout of all Work on this project. The Contractor shall provide all necessary surveys, field staking, and positioning for the construction of all components at the proper alignment, elevations, grades, and positions, as indicated on the Contract Drawings and as required for the proper operation and function. The Contractor shall stake its Work area limits. Contractor shall perform all construction staking using a land surveyor licensed in the State of California. Contractor shall provide a staking plan prior to commencement of Work for the City's review and maintain monuments, stakes, and marks, and shall update the plan as necessary. Director, or Director's designated representative, may verify the field condition. Errors or inconsistencies in the Contract Documents discovered by the Contractor shall be reported to the Director within twenty-four (24) hours and prior to constructive forms or related improvements. Any work Installed with this requirement shall be subject to removal and replacement at the Contractor's expense.

FOR COUNCIL APPROVAL ONLY

The Contractor's lay-out shall be based on existing structures, property lines, survey control, and bench marks established by the City. All structures and pipeline connections shall be Installed based on actual elevation of existing structures to which connections are made.

The Contractor shall supply such labor as required, at no extra charge, to aid and assist the Director in checking location and grades of the Work as set by the Contractor if the Director desires to perform this checking. This shall include moving materials and equipment located between monuments and the construction Work.

2-1.19 **ARCHEOLOGICAL DISCOVERIES.** Upon discovery of prehistoric or historic artifacts, or other indicators or examples of cultural resources discovered during the course of site preparation, grading, excavation, construction or other development activities, all operations within fifty feet (50') of the find shall cease until such time as the City provides the services of a qualified archeologist to evaluate the finds and recommend appropriate action.

Prehistoric materials can include flaked stone tools (e.g., projectile points, knives and choppers) or tool making debris of obsidian, chert, quartzite and other materials, culturally darkened soil (i.e., midden, which often contains heat affected rock, ash and charcoal, shellfish remains, and cultural materials), and stone milling equipment such as mortars, pestles and hand stones. Historic material may include wood, stone, concrete or adobe footings, walls and other structural remains; debris filled wells or privies; and deposits of wood, metal, glass, ceramics and other refuse.

2-1.20 **PRESERVATION OF MONUMENTS.** Any monuments or bench marks disturbed by construction operations shall be repaired per the City's standard and promptly re-established by a registered land surveyor or civil engineer. A plat for each monument shall be furnished to the Director after the plat has been recorded with the Placer

FOR COUNCIL APPROVAL ONLY

County Recorder's Office at no additional cost to the City. The recorded plat shall serve as a record of the re-establishment of said existing survey points.

2-1.21 **CONFORMITY WITH CONTRACT DOCUMENTS.** Work and materials shall conform to the lines, grades, cross sections, dimensions and material requirements, including tolerances, required by the Contract Documents. Although measurement, sampling and testing may be considered evidence as to such conformity, the City shall be the sole judge as to whether the Work or materials deviate from the Contract Documents. At its option, the City may elect to accept deviations from the Contract Documents with appropriate backcharge Assessments against the Contractor, and, if such an election is made, the City will provide written notice to the Contractor of such acceptance.

2-1.22 **FINAL CLEANUP.** Prior to final Acceptance of the Work, the Contractor shall thoroughly clean the Premises, remove all temporary structures built by or for the Contractor, and remove all equipment and surplus construction material and debris from the area. The entire project, before Acceptance by the City, shall be left in a neat and clean condition. All Work areas and temporary construction areas shall be returned to essentially the same conditions existing before the commencing of project construction.

2-1.23 **AS-BUILT DOCUMENTS AND DRAWINGS.** The Contractor shall maintain one set of the full size prints furnished by the City and mark thereon in color any deviations from plan dimensions, elevations, or orientations. Also, the Contractor shall locate on said prints, all underground facilities, such as piping, conduits and tanks by accurate field measurement from structure walls, corners, etc. The Contractor shall submit the prints and an electronic CD (searchable PDF or source file format such as AutoCAD) in good condition to the Director upon completion of the job as a condition of Acceptance of the project. Marked prints

FOR COUNCIL APPROVAL ONLY

shall be updated at least once each week and shall be available to the Director for review as to currency prior to developing partial payment estimates. After the completion of testing, but prior to Acceptance, the Contractor shall submit As-Built electrical drawings in color and an electronic CD showing all components and their wiring, and as specified in the Supplemental Conditions.

2-1.24 **SUPERINTENDENCE.** The Contractor shall supervise and direct the Work, which shall be performed in accordance with the requirements of the Contract Documents. The Contractor shall be solely responsible for implementation of all construction means, methods, techniques, sequences, and procedures and for coordination of all portions of the Work under the Agreement. The Contractor shall be solely responsible for the safety of its employees, Subcontractors of any tier, Suppliers, visitors to the Contractor, and other third parties associated with the Contractor.

The Contractor shall designate in writing before starting Work, an authorized representative who shall have the authority to represent and act for the Contractor.

When the Contractor is comprised of two (2) or more persons, firms, partnerships, or corporations functioning on a joint venture basis, said Contractor shall designate in writing before starting Work, the name of one authorized representative who shall have the authority to represent and act for the Contractor. Instances of misconduct, contract non-compliance, unsatisfactory performance, or incompetence by these personnel shall be grounds for the City to direct Contractor to dismiss them from the Project. Contractor shall immediately comply with the City's request for dismissal, at no cost to the City, and shall designate a replacement, which shall be subject to approval by the City.

Said authorized representative shall be present at the site of the Work at all times while Work is actually in progress on the Contract. When Work is not in progress and during periods

FOR COUNCIL APPROVAL ONLY

when Work is suspended, arrangements acceptable to the Director shall be made for any Emergency Work that may be required.

Whenever the Contractor or its authorized representative is not present on any particular part of the Work where it may be desired to give direction, orders will be given by the Director, which shall be received and obeyed by the superintendent or foremen who may have charge of the particular Work in reference to which the orders are given.

Any order given by the Director, not otherwise required by the Supplemental Conditions to be in writing, will on request of the Contractor, be given or confirmed by the Director in writing.

2-1.25 **CHARACTER OF WORKER.** If any Subcontractor or person employed by the Contractor shall appear to the Director to be incompetent or to act in a disorderly or improper manner, he or she shall be removed immediately on the requisition of the Director, and such person shall not again be employed on the Work.

2-1.26 **INSPECTION.** The Contractor shall at all times permit the Director to inspect the Work or any part thereof. The Contractor shall maintain proper facilities and provide safe access for such inspection by the Director to all parts of the Work, and to the shops where the Work is in preparation. Work shall not be covered up until authorized by the Director and the Contractor shall be solely responsible for notifying the Director where and when such Work is in readiness for inspection and testing. Should any such Work be covered without authorization, it shall, if so ordered, be uncovered at the Contractor's expense.

Unless otherwise designated as normal working hours, whenever the Contractor intends to perform Work on Saturday, Sunday, or a Legal Holiday, the Contractor shall give notice to the Director of such intention forty-eight (48) hours prior to performing such Work, or such longer

FOR COUNCIL APPROVAL ONLY

period as may be specified so that the Director may make necessary arrangements.

The observation and/or approval of the workmanship or materials by the City shall not relieve the Contractor of any obligations to fulfill the requirements of the Contract Documents. Workmanship and materials not meeting such requirements shall be corrected and unsuitable Work or material may be rejected, notwithstanding that such Work or materials have been previously observed and/or approved by the City, or payment therefor has been included in a progress estimate.

The City may order re-examination of questioned Work at any time before final Acceptance. If so ordered, the Contractor shall uncover the Work. If such work is found to be in accordance with the Contract Documents, the City will pay for the cost of uncovering, removing, recovering and replacing the parts removed; but if such Work so exposed or examined is not in accordance with the Contract Documents, the uncovering, removal, recovering and replacement shall be at the Contractor's expense. Work that has been covered prior to observation by the City does not qualify as re-examined work; the City may order such work uncovered for observation without payment of any costs.

2-1.27 **REMOVAL OF REJECTED AND UNAUTHORIZED WORK.** All Work which has been rejected shall be remedied, or removed and replaced by the Contractor in a manner acceptable to the Director and no compensation will be allowed the Contractor for such removal, replacement, or remedial Work.

Any Work done beyond the lines shown on the Contract Drawings or established by the Director, or any Work done without written authority will be considered as unauthorized Work and will not be paid for. Upon order of the Director, unauthorized Work shall be remedied, removed, or replaced at the Contractor's expense.

FOR COUNCIL APPROVAL ONLY

Upon failure of the Contractor to comply promptly with any order of the Director made under this section, the Director may cause rejected or unauthorized Work to be remedied, removed, or replaced, and the costs thereof will be deducted from any moneys due or to become due the Contractor.

FOR COUNCIL APPROVAL ONLY

SECTION 3

CHANGES IN THE WORK

3-1.01 **CHANGES.** The Director, without invalidating this Agreement and without notice to Contractor's surety, may order changes in the Work, consisting of additions or deletions, or other revisions. The Contract Price and the Contract Time shall be adjusted accordingly. All such changes in the Work, including in the Contract Price and the Contract Time, shall be authorized only by Contract Change Order, signed by the Director.

If Contractor claims that performance of any work entitles it to additional compensation or to an extension of time for performance of the Work, Contractor shall provide written notice to the City of any such claim prior to undertaking such work. Contractor shall provide written notice of any anticipated impacts to the Contract Price or Contract Time within three (3) Days of discovering such impact, by submitting a Notice of Potential Claim described in Section 7-1.03 below, or notice of delay as described in Section 6-1.09 below. If the Director refuses to issue a Change Order for such work, Contractor shall perform that work if directed or obligated to do so and shall submit a complete and specific Claim for additional compensation and/or extension of time for performance within fifteen (15) Days after such work is performed, as described in Section 7-1.03 below. Failure to provide written notice of claims prior to undertaking such work, failure to provide a timely Notice of Potential Claim, or failure to submit timely a complete and specific Claim for additional compensation and/or extension of the time for performance, shall be deemed a waiver and abandonment of any such Claim. No Claim, dispute or controversy shall interfere with the progress or performance of the Work and the Contractor shall proceed with the Work as directed by the Director. Failure to so proceed shall amount to a

FOR COUNCIL APPROVAL ONLY

default under this Agreement.

3-1.02 **PROPOSED CHANGE ORDERS.** The Contractor will be notified in writing of a proposed Change Order describing the intended change. Within fifteen (15) Days after receipt of a written request, the Contractor shall submit its proposed price to be added or deducted from the Contract Price due to the change and its estimate of the extent of the adjustment in the Contract Time, if any. The Contractor's proposed price to be added to or deducted from the Contract Price shall be supported by a detailed estimate of cost prepared by the Contractor, vendor or Supplier. The Contractor's proposed price submittal shall be accompanied by a statement of the time necessary for the changed Work, together with a description of how this time will be incorporated into the current Construction Schedule. The Contractor shall upon request by the Director permit inspection of its original Contract estimate, subcontract agreements or purchase orders relating to the change.

If agreement is reached on the adjustment in compensation as provided in Section 3-1.05, "Contract Price Adjustment," of these General Conditions, the Contractor shall proceed with the Work as changed at the agreed price.

If the Contractor and the Director fail to agree as to the adjustment in compensation for the performance of the changed Work, the Contractor, upon written order from the Director, shall proceed immediately with the changed Work and the Contract Price shall be adjusted in accordance with Section 3-1.06, "Force Account Payment," of these General Conditions.

If the Contractor fails to submit its cost estimate within such fifteen (15) Day period, the Contractor shall commence the Work as changed immediately upon receipt of written order of the Director, and the Contract Price will be adjusted in accordance with the Director's cost estimate for the changed Work.

FOR COUNCIL APPROVAL ONLY

3-1.03 **EMERGENCY AND INDETERMINATE TYPE CHANGE ORDERS.** Changes in the Work made necessary by an Emergency, as determined by the Director, or changes of a kind where the extent of the Work cannot be determined until completed, may be authorized by the Director in writing. The Change Order shall state that it is issued pursuant to this Section 3-1.03. Upon receipt of an authorized Change Order or other written order of the Director, the Contractor shall proceed with the ordered Work and the Director will maintain a daily job record containing a detailed summary of all labor, materials and equipment required for the changed Work.

Within fifteen (15) Days after receiving a written request, the Contractor shall submit a detailed estimate of cost for the change and any requested change in Contract Time in the same manner as required for proposed Change Orders in Section 3-1.02 of these General Conditions.

3-1.04 **EXECUTED CHANGE ORDER.** A Contract Change Order signed by both the Director and the Contractor is an "executed Contract Change Order." By signing the Contract Change Order, the Contractor agrees that the specified compensation constitutes full compensation for the changed Work, including payment for interruption, disruption, acceleration, extended Overhead, delay or any other "impact" claim or "ripple effect" claim. The Contractor specifically understands and agrees that its execution of the Contract Change Order shall constitute a waiver of any right for the Contractor to claim any additional compensation with respect to the subject matter of the Contract Change Order.

3-1.05 **CONTRACT PRICE ADJUSTMENT.** If a Contract Change Order provides for an adjustment to the Contract Price, the amount of such adjustment shall be determined by one of the following methods, or a combination thereof, as determined by the City and in its sole discretion:

FOR COUNCIL APPROVAL ONLY

A. Lump sum. The Contractor and the City may agree on a lump sum amount for the Change Order. At the City's request, the Contractor will provide pricing for the work. Maximum markups for Contract Change Orders paid for using lump sum pricing shall be paid for in the same manner and in the same amounts as markups for Force Account work, as described in Section 3-1.06 below.

B. Unit Prices. The unit prices set forth in the Contractor's Schedule of Bid Prices will be utilized where they are applicable and acceptable to the City. The Contractor's unit prices shall remain firm and shall not be subject to adjustment unless and until the actual quantity of work is increased or decreased by Contract Change Order in an amount greater than twenty-five percent (25%) from the estimated quantity indicated for such item. No markups will be given for Contract Change Orders paid for using unit prices.

Unit prices for new items included in the Contract Change Order but not included in the original bid shall be as mutually agreed upon or, in the absence of agreement, as determined by the City in the same manner as if the work were to be paid for on a Force Account basis, as described in Section 3-1.06 below.

C. Force Account. Where the City and the Contractor are unable to agree on lump sum pricing and if the City does not elect to utilize the unit prices in Contractor's bid, or such unit prices are not applicable, the changed work will be performed and tracked by the Contractor as Force Account work, as described in Section 3-1.06 below. The City will pay for such work, including markups, properly attributable to the change in accordance with those Force Account provisions.

D. Eliminated Items. The City reserves the right to delete any bid item of Work in its entirety. The City makes no representation that any work under a bid item of Work

FOR COUNCIL APPROVAL ONLY

will be performed, and all work may be subject to a Contract Change Order that deletes such work. Bid items are distinct and severable from the other bid items, and the Contractor shall not be entitled to any anticipated profit, unabsorbed Overhead, or other indirect expense attributable to the deleted item, except as provided immediately below with regard to Force Account mark-ups on the direct and verifiable costs incurred prior to the City's order that deletes the work.

Should any bid item of Work be eliminated in its entirety and not accounted for as described immediately above and, in the absence of an executed Contract Change Order covering such elimination, payment will be made to the Contractor for actual direct and verifiable costs incurred in connection with such eliminated bid item if incurred prior to the date of notification in writing by the City of such elimination. If acceptable material is ordered by the Contractor for the eliminated item prior to the date of notification of such elimination by the City, and if orders for such material cannot be canceled, it will be paid for at the actual direct and verifiable cost to the Contractor. Actual direct costs shall include documented vendor shipping fees, Supplier restocking fees, if applicable, and Contractor handling costs directly related to the eliminated item(s). In such case, the material paid for shall become the property of the City and the actual cost of any further handling will be paid for by the City. If the material is returnable to the vendor and if the City so directs, the material shall be returned and the Contractor will be paid for the actual direct cost of charges made by the vendor for returning the material. The actual direct cost of handling returned materials will also be paid for by the City. The actual direct and verifiable costs to be paid by the City as provided herein will be computed in the same manner as if the work were to be paid for on a Force Account basis, including the application of Force Account mark-ups to said costs.

3-1.06 **FORCE ACCOUNT PAYMENT.** When Work performed pursuant to a

FOR COUNCIL APPROVAL ONLY

Change Order is to be paid for on a Force Account basis, the Contractor's labor, materials and equipment used in the performance of such Work shall be subject to the approval of the City, and the compensation will be determined as set forth below in this section.

3-1.06A **LABOR.** The Contractor will be paid an amount based on the actual cost for the workers (including foremen when authorized by the Director) used in the actual and direct performance of the Work. All labor costs associated with Overhead, whether field or home office, are specifically excluded herein, as those labor costs are covered by the below mark-ups. The cost of labor, whether the employer is the Contractor, Subcontractor or other forces, shall include employer payments; assessment of benefits required by lawful labor union collective bargaining agreements; compensation insurance payments; contributions made to the State pursuant to the Unemployment Insurance Code; and for taxes paid to the Federal Government pursuant to the Social Security Act of August 14, 1935, as amended. No labor cost will be recognized at a rate in excess of the wages prevailing in the locality at the time the Work is performed, nor will the use of a labor classification, which would increase the cost, be permitted unless the Contractor establishes to the complete satisfaction of the Director the necessity for payment at a higher rate.

3-1.06B **MATERIALS.** Only materials furnished by the Contractor and necessarily used in the performance of the Work will be paid for. Such cost of materials may include the costs of procurement, transportation and delivery if necessarily incurred. If a cash or trade discount by the actual supplier is available to the Contractor, it shall be credited to the City. If materials are procured by the purchaser by any method which is not a direct purchase from and a direct billing by the actual supplier to such purchaser, the cost of such materials shall be deemed to be the price paid to the actual supplier plus the actual costs, if any, incurred in the

FOR COUNCIL APPROVAL ONLY

handling of such materials. If the materials are obtained from a supply or source owned wholly or in part by the purchaser, the cost of such materials shall not exceed the price paid by the purchaser for similar materials furnished from said source on Bid items or the current wholesale price for such materials delivered to the job site, less any discounts as provided herein, whichever is lower. If, in the opinion of the Director, the cost of materials is excessive, or if the Contractor fails to furnish satisfactory evidence of the cost to it from the actual supplier within sixty (60) Days after the date of delivery of the materials or within fifteen (15) Days after Acceptance of the Agreement, whichever occurs first, the cost of the materials shall be deemed to be the lowest current wholesale price at which similar materials are available in the quantities required, less any discounts provided herein. The Department reserves the right to furnish such materials required by the Change Order as it deems advisable, and the Contractor shall have no claim for cost or markups on material furnished by the Department.

3-1.06C **EQUIPMENT.** The Contractor will be paid an amount based on the actual cost for the use of equipment directly required and approved by the Director in the performance of the changed Work. No payment will be made for time while equipment is inoperative due to breakdowns or on Days when no Work is performed. In addition, the rental time shall include the time required to move the equipment to the Work from the nearest available source of such equipment, and to return it to the source. If such equipment is not moved by its own power, then loading and transportation costs will be paid. Moving time, loading and transportation costs will only be paid if the equipment is used exclusively on the changed Work during the time between move in and move out. Individual pieces of equipment having a replacement value of One Thousand Dollars ($1000) or less shall be considered to be tools or small equipment, and no payment will be made therefore. For equipment owned,

FOR COUNCIL APPROVAL ONLY

furnished, or rented by the Contractor, no cost therefore shall be recognized in excess of the equipment rental rates published by Caltrans at the following website address: http://www.dot.ca.gov/hq/construc/equipmnt.html. Equipment located at a Work Site and utilized on non-Force Account work shall not eligible for standby payment, and shall be charged on a Force Account basis only when solely performing pre-approved Force Account work tasks.

3-1.06D **MARKUPS.** When a Change Order increases the cost of the Work, the Contractor may add the following maximum markups to its actual costs of labor, materials, or equipment rental:

15 percent for labor;

10 percent for materials; and

5 percent for equipment rental.

The above markups include full compensation, covering the costs of all supervision, bonds, profit, Overhead, and other general expenses not specifically designated as a direct cost in Sections 3-1.06A through 3-1.06C above. The total payment (i.e., direct cost plus applicable markups) shall be deemed to be the actual cost of such work and shall constitute full compensation therefor. The Contractor specifically understands and agrees that such payment shall include any Contractor costs for interruption, disruption, and acceleration, extended Overhead, Change Order management, delay or other "impact" claim or "ripple effect" claim.

When work paid for on a Force Account basis is performed by forces other than the Contractor's own forces, the maximum allowable mark-ups for the Subcontractors' costs shall be fifteen percent (15%) for the cost of labor, ten percent (10%) for the cost of materials, and five percent (5%) for the cost of rented equipment. In these situations where the work is being performed by Subcontractors, the Contractor will only be entitled to an additional five percent

FOR COUNCIL APPROVAL ONLY

(5%) mark-up and will not be entitled to receive the additional mark-ups specified in this section.

When a Change Order decreases the cost of the Work, the reduction in cost shall include a five percent (5%) markup on the estimated cost for furnishing the labor, materials and equipment, which would have been used on such Work, had the Change Order not been issued.

When a Change Order involves both added Work and deleted Work, the markup or markups to be used shall be as follows:

The actual costs of labor, materials, and equipment rental for added and deleted Work shall be calculated separately without adding markups. If the difference between the calculated costs for labor results in an increased cost, a markup of fifteen percent (15%) shall be applied to the increased cost. If the difference between the calculated costs of materials or equipment rental results in an increased cost, a markup of ten percent (10%) and five percent (5%) respectively, shall be applied to the increased costs of materials or equipment rental, as the case may be. If the difference between the calculated costs for labor, materials or equipment rental results in a decreased cost, a markup of five percent (5%) shall be applied to the decreased costs of labor, materials or equipment rental, as the case may be.

Contractor shall not add mark-ups on work performed and billed by City staff nor add mark-ups to successive iterations of proposed Change Order cost proposals returned to Contractor by the City due to incomplete or inaccurate information being originally submitted by the Contractor. If the Contract Price increases by the issuance of Change Orders, the penal amounts of the bonds required shall increase accordingly.

3-1.06E **RECORDS.** The Contractor shall maintain its records in such a manner as to provide a clear distinction between the direct costs of extra work paid for on a Force Account basis and the costs of other operations.

FOR COUNCIL APPROVAL ONLY

From the above records, the Contractor shall furnish the City completed daily extra work reports, on forms acceptable to the City, for each Day's extra work to be paid for on a Force Account basis. The daily extra work reports shall itemize the materials used, and shall cover the direct cost of labor and the charges for equipment rental, whether furnished by the Contractor, Subcontractor, or other forces. The daily extra work reports shall provide names and identifications and classifications of workers, the hourly rate of pay and hours worked, and also the size, type, and identification number of equipment, and hours operated. Daily extra work and Force Account reports (actual or claimed) shall be signed by both the City's and the Contractor's representatives within twenty-four (24) hours of the performance of the work.

Valid copies of vendor's invoices shall substantiate material charges. Such invoices shall be submitted with the daily extra work reports, or if not available, they shall be submitted with subsequent daily extra work reports. Should said vendor's invoices not be submitted within sixty (60) Days after the date of delivery of the material or within fifteen (15) Days after the Acceptance of the Agreement, whichever occurs first, the City reserves the right to establish the cost of such materials at the lowest current wholesale prices at which said materials were available in the quantities, less any discounts.

The City will compare its records with the completed daily extra work reports furnished by the Contractor and make any necessary adjustments. When these daily extra work reports are agreed upon and signed by both parties, said reports shall become the basis of payment for the work performed, but shall not preclude subsequent adjustment based on a later audit by the City.

The Contractor's cost records pertaining to Work paid for on a Force Account basis shall be open to inspection or audit by representatives of the City during the life of the Agreement and for a period of not less than three (3) years after the date of Agreement completion and the

FOR COUNCIL APPROVAL ONLY

Contractor shall retain such records for that period. Where payment for materials or labor is based on the cost thereof to forces other than the Contractor, the Contractor shall make every reasonable effort to insure that the cost records of such other forces will be open to inspection and audit by representatives of the City on the same terms and conditions as the cost records of the Contractor. If an audit is to be commenced more than sixty (60) Days after the date of Acceptance of the Agreement, the Contractor will be given fifteen (15) Days' notice of the time when such audit is to begin.

3-1.07 **COST REDUCTION PROPOSALS.** The City encourages the Contractor to submit Cost Reduction Proposals whenever the Contractor identifies areas and/or instances in which there can be savings to the Work. Contractor may submit to the City, in writing, proposals for modifying the plans, Specifications or other requirements of the Agreement for the sole purpose of reducing the total cost of construction, including the time for completion of the Work. The City may consider such Cost Reduction Proposals and, if accepted, the Agreement will be equitably adjusted. The City has no obligation to consider or accept Cost Reduction Proposals.

FOR COUNCIL APPROVAL ONLY

SECTION 4

CONTROL OF MATERIALS

4-1.01 **MATERIALS.** The Contractor shall furnish all materials required to complete the Work, except materials that are designated in the Supplemental Conditions to be furnished by the City and materials furnished by the City in accordance with Section 3, "Changes in the Work," of these General Conditions.

Unless otherwise specified in the Supplemental Conditions, materials furnished by the Contractor for incorporation into the Work shall be new. When the quality or kind of materials, articles, or equipment is not particularly indicated, then the quality or kind thereof shall be similar to those that are indicated.

Articles or materials to be incorporated in the Work shall be stored in such a manner as to insure the preservation of their quality and fitness for the Work, and to facilitate inspection.

All materials which do not conform to the requirements of the Contract Documents as determined by the Director, will be rejected whether in place or not. Rejected material shall be removed immediately from the site of the Work, unless otherwise permitted by the Director. No rejected material, the defects of which have been subsequently corrected, shall be used in the Work, unless approval in writing has been given by the Director. Upon failure of the Contractor to comply promptly with any order of the Director made under these provisions, the Director shall have the authority to cause the removal and replacement of rejected material and to deduct the cost thereof from any moneys due or to become due the Contractor.

Manufacturer's warranties, guaranties, instruction sheets and parts lists, which are furnished with certain materials incorporated in the Work, shall be delivered to the Director

FOR COUNCIL APPROVAL ONLY

before Acceptance of the Contract.

Unless otherwise designated in the Supplemental Conditions or Specifications, materials furnished by the City will be delivered to the job site. Materials furnished by the City that are designated in the Supplemental Conditions as available at locations other than the job site shall be hauled to the site of the Work by the Contractor at its expense, including any necessary loading and unloading that may be involved.

The Contractor will be held responsible for all materials furnished to it, and shall pay all demurrage and storage charges. City-furnished materials lost or damaged from any cause whatsoever shall be replaced by the Contractor. The Contractor will be liable to the Department for the cost of replacing City-furnished material and such costs may be deducted from any moneys due or to become due the Contractor.

4-1.02 **PRODUCT AND REFERENCE STANDARDS.** When descriptive catalog designations, including manufacturer's name, product brand name, or model number are referred to in the Contract Documents, such designations shall be considered as being those found in industry publications in effect on the day the Notice to Contractors for the Work is dated, except as may be otherwise stated.

When standards or test designations of the Federal Government, trade societies, or trade associations are referred to in the Contract Documents by specific date of issue, these shall be considered as part of the Contract. When such references do not bear a date of issue, the edition in effect on the day the Notice to Contractors for the Work is dated shall be considered as part of the Contract.

4-1.03 **SAMPLING AND TESTING OF MATERIALS.** Unless otherwise specified, all tests shall be performed in accordance with the methods used by the State

FOR COUNCIL APPROVAL ONLY

Department of Transportation (Caltrans) and shall be made by the Director or his or her designated representative.

The State Department of Transportation has developed test methods for testing the quality of materials and Work. These test methods are identified by a California Test followed by the serial number. Copies of individual tests are available at the State Department of Transportation Laboratory, Sacramento, California, and will be furnished to interested persons upon request.

Whenever a reference is made in the Supplemental Conditions to a California Test by number, it shall mean the California test in effect on the day the Notice to Contractors for the Work is dated.

Whenever the Supplemental Conditions provide an option between two (2) or more test methods, the Director will determine the test method to be used.

Whenever a Supplemental Condition, manual, or test designation provides for test reports (such as certified mill test reports) from the manufacturer, copies of such reports, identified as to the lot of material, shall be furnished to the Director. The manufacturer's test reports shall supplement the inspection, sampling and testing provisions of this Section 4-1.03 and shall not constitute a waiver of the City's right to inspect. When material which cannot be identified with specific test reports is proposed for use, the Director may at his or her discretion, select random samples from the lot for testing. Testing specimens from the random samples, including those required for retest, shall be prepared in accordance with the referenced Supplemental Conditions and furnished by the Contractor at its expense. The number of such samples and test specimens shall be entirely at the discretion of the Director.

When requested by the Director, the Contractor shall furnish, without charge, samples of

FOR COUNCIL APPROVAL ONLY

all material entering into the Work, and no material shall be used prior to approval by the Director, except as provided in Section 4-1.04, "Certificates of Compliance," of these General Conditions.

A. Inspection and Access for Testing. The Contractor shall provide safe access for the Director and his or her inspectors to adequately inspect the quality of Work and conformance with the General and Supplemental Conditions. The Contractor shall provide adequate lighting, ventilation, ladders and other protective facilities as may be necessary for the safe performance of inspections.

The Contractor shall submit samples or specimens of such materials to be furnished or used in the Work as the Director may require. The Contractor shall furnish the Director all necessary labor and facilities for such things as excavation in the compacted fill to depths required to take samples.

Inspections, tests, or favorable review by the Director or others shall not relieve the Contractor from its obligations to perform the Work in accordance with the requirements of the Contract Documents.

Work covered without the favorable review or consent of the Director shall, if required by the Director, be uncovered for examination at the Contractor's expense.

If the Engineer, Architect, or Director considers it necessary or advisable that covered Work be inspected or tested by others, the Contractor, at the Director's request, will uncover, expose or otherwise make available for observation, inspection or testing as the Director may require, that portion of the Work in question, furnishing all necessary labor, materials, tools, and equipment. If it is found that such Work is defective, the Contractor will bear all the expenses of such uncovering, exposure, observation, inspection and testing and of

FOR COUNCIL APPROVAL ONLY

satisfactory reconstruction. If, however, such Work is not found to be defective and the Work was not covered without favorable review of the Director, the Contractor will be allowed an increase in the Contract Price or an extension of the Contract Time, or both, to cover its costs directly attributable to such uncovering, exposure, observation, inspection, testing, and reconstruction and an appropriate Change Order shall be issued.

Whenever the Contractor varies the period during which Work is carried on each Day, the Contractor shall give due notice to the Director so that proper inspection may be provided. Any Work done in the absence of the Director may be subject to rejection. Proper facilities for safe access for inspection to all parts of the Work shall at all times be maintained for the necessary use of the Director and other agents of the City. Authorized representatives and agents of the Director shall be permitted access to inspect all Work and materials wherever it is required for preparation of progress reports, and the Contractor shall provide proper facilities for such access and inspection.

It is the Contractor's responsibility to supervise the Work and complete the project in accordance with the Contract Documents. In the course of managing that effort, the Contractor shall generate its own punch lists as deemed necessary. The Director may prepare punch lists for the Director's own use in communicating with the Contractor; however, the Director shall be under no obligation to prepare punch lists for the Contractor. In general, the Director will prepare punch lists only after the Contractor has given the Director written notice that the subject Work is completed and tested in accordance with the Contract Documents and is ready for operation and/or use and/or occupancy. Failure of the Director to include an item in a punch list shall not relieve the Contractor of its duty to satisfactorily complete all Work required by the Contract Documents.

FOR COUNCIL APPROVAL ONLY

Upon Final Completion of the construction Work and request by the Contractor, the Director will conduct a final inspection as a basis for recommending to the City that the Work be accepted.

B. Field and Materials Testing. Where the Supplemental Conditions require Work to be specially field tested or approved, it shall be tested only in the presence of the Director after timely notice of its readiness for inspection and test, and the Work after testing shall be covered up only upon the consent thereto of the Director.

The results of any tests made are for the information of the Director. Regardless of any test results, the Contractor is solely responsible for the quality of workmanship and materials and for compliance with the requirements of the Contract Drawings and Supplemental Conditions.

Except as specifically required under the Supplemental Conditions, all tests by the Director of materials furnished by the Contractor will be done in accordance with commonly recognized standards of national organizations. The Contractor shall furnish such samples of all materials as required by the Director without charge. No material shall be used unless it has been favorably reviewed by the Director.

Where such inspection and testing are to be conducted by an independent Laboratory or agency, the sample or samples of materials to be tested shall be selected by such Laboratory or agency, or the Director, and not by the Contractor.

C. Costs of Testing.

1. Initial Services: The City shall furnish and pay for all initial testing services required by the Contract Documents. When initial tests indicate non-compliance with the Contract Documents, the cost of initial tests associated with that non-compliance will be

FOR COUNCIL APPROVAL ONLY

deducted by the City from the balance owed the Contractor. The Contractor shall furnish samples of materials for testing as may be required by the Director. Such samples shall be furnished without cost to the City.

2. Retesting: When initial tests indicate non-compliance with the Contract Documents, all subsequent retesting occasioned by the non-compliance shall be performed by the same testing Laboratory and the cost thereof will be deducted by the City from the balance owed the Contractor. Contractor shall be billed for each additional test.

3. Contractor Convenience Testing: Inspection or testing performed exclusively for the Contractor's convenience shall be the sole responsibility of the Contractor.

4. Additional Tests and Inspections: When in the opinion of the Director additional tests or inspections are required because of the manner in which the Contractor executes its Work, such tests and inspections shall be paid for by the City, but will be deducted from the Contract Price. Examples of such tests and inspections are tests of materials substituted for previously accepted materials or substituted for specified materials, retests made necessary by failure of material to comply with the requirements of the Specifications, load tests made necessary because of portions of the structure not fully meeting Specifications or plan requirements, etc.

FOR COUNCIL APPROVAL ONLY

4-1.04 **CERTIFICATES OF COMPLIANCE.** A Certificate of Compliance shall be furnished prior to the use of any materials for which the Supplemental Conditions require that such a Certificate be furnished. In addition, the Director may permit the use of certain materials or assemblies prior to sampling and testing if accompanied by a Certificate of Compliance. The Certificate shall be signed by the manufacturer of the material or the manufacturer of assembled materials and shall state that the materials involved comply in all

respects with the requirements of the Supplemental Conditions. A Certificate of Compliance shall be furnished with each lot of such materials delivered to the Work and the lot so certified shall be clearly identified in the Certificate.

All materials used on the basis of a Certificate of Compliance may be sampled and tested at any time. The fact that material is used on the basis of a Certificate of Compliance shall not relieve the Contractor of responsibility for incorporating material in the Work which conforms to the requirements of the Contract Documents and any such material not conforming to such requirements will be subject to rejection whether in place or not.

The Department reserves the right to refuse to permit the use of material on the basis of a Certificate of Compliance.

The form of the Certificate of Compliance and its disposition shall be as directed by the Director.

FOR COUNCIL APPROVAL ONLY

SECTION 5

LEGAL RELATIONS AND RESPONSIBILITY

5-1.01 **LAWS TO BE OBSERVED.** The Contractor shall keep informed of and observe, and comply with and cause all of its agents and employees to observe and comply with, all prevailing Federal and State laws, and rules and regulations made pursuant to said Federal and State laws, and county and municipal ordinances, and regulations, which in any way affect the conduct of the Contract. If any conflict arises between provisions of the Contract and any such law above referred to, the Contractor shall notify the Director at once in writing. To the fullest extent allowed by law, the Contractor shall defend, indemnify, and save and hold harmless the City or any of its officers, agents, employees, and volunteers against any claim or liability arising from or based on the violation of any such law, rule, or regulation, whether by itself or its agents or employees.

5-1.02 **HOURS OF LABOR.** Eight (8) hours labor constitutes a legal Day's work. The Contractor or Subcontractor shall, as a penalty to City, forfeit Twenty-five Dollars ($25) for each worker employed in the execution of the contract by the respective Contractor or Subcontractor for each calendar day during which such worker is required or permitted to work more than eight (8) hours in any one (1) calendar day and forty (40) hours in any one (1) calendar week in violation of the provisions of the Labor Code, and in particular, Section 1810 to Section 1815, thereof, inclusive, except that Work performed by employees of Contractors in excess of eight (8) hours per day, and forty (40) hours during any one (1) week, shall be permitted upon public work upon compensation for all hours worked in excess of eight (8) hours per day at not less than one and one-half (1-1/2) times the basic rate of pay, as provided in said

FOR COUNCIL APPROVAL ONLY

Section 1815. In addition, Contractor and/or its Subcontractors may be required to pay double the basic rate of pay for all hours worked in excess of twelve (12) hours in any workday and under other circumstances. (See California Code of Regulations, Title 8, Sections 16100(c)(6) and (16200(a)(3)(F) and applicable Department of Industrial Relations prevailing wage determinations.)

5-1.03 **NONDISCRIMINATION.**

A. Attention is directed to Labor Code Section 1735, which reads as follows:

"A contractor shall not discriminate in the employment of persons upon public works on any basis listed in subdivision (a) of Section 12940 of the Government Code, as those bases are defined in Sections 12926 and 12926.1 of the Government Code, except as otherwise provided in Section 12940 of the Government Code. Every Contractor for public works who violates this section is subject to all the penalties imposed for a violation of this chapter."

B. During the performance of this Contract, Contractor and its Subcontractors shall not unlawfully discriminate against any employee or applicant for employment because of race, religious creed, color, national origin, ancestry, physical disability, mental disability, medical condition, genetic information, marital status, sex, gender, gender identity, gender expression, age, sexual orientation, or military and veteran status. The Contractor and Subcontractors shall insure that the evaluation and treatment of their employees and applicants for employment are free of such discrimination. The Contractor and Subcontractors shall comply with the provisions of the California Fair Employment and Housing Act (Government Code §12900, et seq.) and the applicable regulations promulgated thereunder (California Code of Regulations, Title 2, §7285.0 et seq.) and other applicable State and Federal regulations and City

FOR COUNCIL APPROVAL ONLY

policies pertaining to nondiscrimination and affirmative action which are incorporated into this Agreement by reference and made a part hereof as if set forth in full. The Contractor and its Subcontractors shall give written notice of their obligations under this clause to labor organizations with which they have a collective bargaining or other agreement.

C. Contractor shall include the nondiscrimination and compliance provisions of this clause in all subcontracts to perform Work under the agreement.

5-1.04 **PREVAILING WAGE.** The Contractor and any Subcontractor shall comply with Labor Code Sections 1770 et seq. In accordance with said Section 1775 the Contractor and any Subcontractor under the Contractor shall, as a penalty, forfeit to the state or City not more than $200 for each calendar day or portion thereof, for each worker paid less than the prevailing rate as determined by the Director of Industrial Relations for the work or craft in which such worker is employed for under the Contract by the Contractor or by any Subcontractor under the Contractor.

The amount of the penalty shall be determined by the Labor Commissioner based on consideration of both of the following: (a) whether the failure to pay the correct rate of per diem wages was a good-faith mistake and, if so, whether the error was promptly and voluntarily corrected when brought to the attention of the Contractor or Subcontractor; and (b) whether the Contractor or Subcontractor has a prior record of failing to meet its prevailing wage obligations.

The penalty may not be less than forty dollars ($40) for each calendar day, or portion thereof, for each worker paid less than the prevailing wage rate, unless the failure of the Contractor or Subcontractor to pay the correct rate of per diem wages was a good faith mistake and, if so, the error was promptly and voluntarily corrected when brought to the attention of the Contractor or Subcontractor.

FOR COUNCIL APPROVAL ONLY

The penalty may not be less than eighty dollars ($80) for each calendar day, or portion thereof, for each worker paid less than the prevailing wage rate, if the Contractor or Subcontractor has been assessed penalties within the previous three (3) years for failing to meet its prevailing wage obligations on a separate contract, unless those penalties were subsequently withdrawn or overturned.

The penalty may not be less than one hundred twenty dollars ($120) for each calendar day, or portion thereof, for each worker paid less than the prevailing wage rate, if the Labor Commissioner determines that the violation was willful, as defined in subdivision (c) of Section 1777.1 of the Labor Code.

If the amount due under this section is collected from the Contractor or Subcontractor, any outstanding wage claim under Chapter 1 (commencing with Section 1720) of Part 7 of Division 2 of the Labor Code against the Contractor or Subcontractor shall be satisfied before applying that amount to the penalty imposed on that Contractor or Subcontractor pursuant to this section.

The determination of the Labor Commissioner as to the amount of the penalty shall be reviewable only for an abuse of discretion.

In addition to said penalty, the difference between such stipulated prevailing wage rates and the amount paid to each worker for each calendar day or portion thereof for which each worker was paid less than the stipulated prevailing wage shall be paid to each worker by the Contractor or Subcontractor.

If a worker employed by a Subcontractor on a public works project is not paid the general prevailing per diem wages by the Subcontractor, the Contractor is not liable for any penalties described above unless the Contractor had knowledge of that failure of the Subcontractor to pay

FOR COUNCIL APPROVAL ONLY

the specified prevailing rate of wages to those workers or unless the Contractor fails to comply with all of the following requirements:

1. The contract executed between the Contractor and the Subcontractor for the performance of work on the public works project shall include a copy of the provisions of Sections 1771, 1776, 177.5, 1813, and 1815 of the Labor Code.
2. The Contractor shall monitor the payment of the specified general prevailing rate of per diem wages by the Subcontractor to the employees, by periodic review of the certified payroll records of the Subcontractor.
3. Upon become aware of the Subcontractor's failure to pay its workers the specified prevailing rate of wages, the Contractor shall diligently take corrective action to halt or rectify the failure, including, but not limited to, retaining sufficient funds due the Subcontractor for work performed on the public works project.
4. Prior to making final payment to the Subcontractor for work performed on the public works project, the Contractor shall obtain an affidavit signed under penalty of perjury from the Subcontractor that the Subcontractor has paid the specified general prevailing rate of per diem wages to its employees on the public works project and any amount due pursuant to 1813 of the Labor Code.

Pursuant to Section 1775 of the Labor Code, the Division of Labor Standards Enforcement shall notify the Contractor on a public works project within fifteen (15) Days of the receipt by the Division of Labor Standards Enforcement of a complaint of the failure of a Subcontractor on that public works project to pay workers the general prevailing rate per diem wages.

Pursuant to the provisions of California Labor Code Section 1773, the City has obtained

FOR COUNCIL APPROVAL ONLY

the general prevailing rate of wages applicable to the categories of workers the City anticipates will be utilized for this project for straight time, overtime, Saturday, Sunday, and holiday Work. The holiday wage rate listed shall be applicable to all holidays recognized in the collective bargaining agreement of the particular craft, classification or type of worker concerned or, if no collective bargaining applies, those holidays identified in Government Code Section 6700. These wage rates may be obtained from the State Department of Industrial Relations and/or the following website address: http://www.dir.ca.gov/dlsr/DPreWageDetermination.htm, which is incorporated herein as a part of this Contract.

Pursuant to Labor Code Section 1773.2, the general prevailing wage rates set forth above, which forms a part of this Contract, shall be posted by the Contractor at a prominent place at the site of the Work.

Pursuant to Labor Code Section 1773.6 and California Code of Regulations Section 16204, Title 8, changes in general prevailing wage determinations shall apply to the project only if issued by the Director of Industrial Relations prior to the City's bid issuance date.

The City will not recognize any claim for additional compensation because of the payment by the Contractor of any wage rate in excess of the prevailing wage rate set forth in the Contract. The possibility of wage increases is one of the elements to be considered by the Contractor in determining its Bid, and will not under any circumstances be considered as the basis of a claim against the City or Contract.

When both California and Federal prevailing wage rates apply, the Contractor and any Subcontractors shall pay their workers the higher of the two rates. The Contractor and any Subcontractors shall insert this clause in any lower tier contract.

5-1.05 **REGISTRATION REQUIRED AS QUALIFICATION TO BID.**

FOR COUNCIL APPROVAL ONLY

Pursuant to Labor Code Section 1771.1(b), notice is hereby given that a Contractor or Subcontractor shall not be qualified to bid on, be listed in a bid proposal, subject to the requirements of Section 4104 of the Public Contract Code, or engage in the performance of any contractor for public work, as defined in Labor Code Sections 1720, et seq., unless currently registered and qualified to perform public work pursuant to Labor Code Section 1725.5. It is not a violation of Labor Code Section 1771.1 for an unregistered contractor to submit a bid that is authorized by Section 7029.1 of the Business and Professions Code or by Section 10164 or 20103.5 of the Public Contract Code, provided the contractor is registered to perform public work pursuant to Section 1725.5.

5-1.06 **PAYROLL RECORDS.** The Contractor's attention is directed to the following provisions of Labor Code Section 1776. The Contractor shall be responsible for the compliance with these provisions by its Subcontractors.

A. The Contractor and each Subcontractor shall keep accurate and current payroll records, showing the name, address, social security number, work classification, straight time and overtime hours worked each day and week, and the actual per diem wages paid to each journeyman, apprentice, worker, or other employee employed by it in connection with the public work. Each payroll record shall contain or be verified by a written declaration that is made under penalty of perjury, stating both of the following:

1. The information contained in the payroll record is true and correct.

2. The employer has complied with the requirements of Section 1771, 1811, and 1815 for any work performed by his or her employees on the public works project.

B. The payroll records enumerated under subdivision (A) shall be available for inspection at all reasonable hours at the principal office of the Contractor on the following

FOR COUNCIL APPROVAL ONLY

basis:

1. A certified copy of an employee's payroll record shall be made available for inspection or furnished to such employee or his or her authorized representative on request.

2. A certified copy of all payroll records enumerated in subdivision (A) shall be made available for inspection or furnished upon request to a representative of the City, the Division of Labor Standards Enforcement, and the Division of Apprenticeship Standards of the Department of Industrial Relations. The City reserves the right to withhold any progress payments to the Contractor in the event of noncompliance with the subsection.

3. A certified copy of all payroll records enumerated in subdivision (A) shall be made available upon request by the public for inspection or for copies thereof. However, a request by the public shall be made through either the City, the Division of Apprenticeship Standards, or the Division of Labor Standards Enforcement. The public shall not be given access to such records at the principal office of the Contractor.

C. The certified payroll records shall be on forms provided by the Division of Labor Standards Enforcement or shall contain the same information as the forms provided by the Division.

D. Each Contractor shall file a certified copy of the records enumerated in subdivision (A) with the entity that requested the records within ten (10) Days after receipt of a written request.

E. Any copy of the records made available for inspection as copies and furnished upon request to the public or any public agency by the City, the Division of Apprenticeship Standards or the Division of Labor Standards Enforcement shall be marked or

FOR COUNCIL APPROVAL ONLY

obliterated to prevent disclosure of an individual's name, address and social security number. The name and address of the Contractor awarded the Contract or Subcontractor performing the Contract shall not be marked or obliterated. Any copy of records made available for inspection by, or furnished to, a joint labor-management committee established pursuant to the federal Labor Management Cooperation Act of 1978 (Section 175a of Title 29 of the United States Code) shall be marked or obliterated only to prevent the disclosure of an individual's name and social security number. A joint labor-management committee may maintain an action in a court of competent jurisdiction against an employer who fails to comply with Section 1774. The court may award restitution to an employee for unpaid wages and may award the joint labor-management committee reasonable attorneys' fees and costs incurred in maintaining the action. An action under this subdivision may not be based on the employer's misclassification of the craft of a worker on its certified payroll records. Nothing in this subdivision limits any other available remedies for a violation of this section.

F. The Contractor shall inform the City of the location of the records enumerated under subdivision (A), including the street address, city and county, and shall, within five (5) business days, provide a notice of a change of location and address.

G. The Contractor shall have ten (10) Days in which to comply subsequent to receipt of written notice requesting the records enumerated in subdivision (A). In the event that the Contractor or Subcontractor fails to comply within the ten (10) Day period, the Contractor shall, as a penalty to the State or City, forfeit twenty-five ($25) Dollars for each calendar day, or portion thereof, for each worker, until strict compliance is effectuated. Upon the request of the Division of Apprenticeship Standards or the Division of Labor Standards Enforcement, these penalties shall be withheld from any progress payment or final payment then due. A contractor

FOR COUNCIL APPROVAL ONLY

is not subject to a penalty assessment pursuant to this section due to the failure of a Subcontractor to comply with this section.

5-1.07 **SAFETY REQUIREMENTS.** It is the intent of the parties that the City is not an exposing, creating, controlling, or correcting employer under California Labor Code Section 6400. In accordance with generally accepted construction practices and State law, the Contractor shall have the authority and be solely and completely responsible for conditions on the Work Site, including safety of all persons and property during performance of the Work. Moreover, the Contractor shall be the controlling employer and has the authority and responsibility to enforce Work Site safety. The Contractor shall be responsible for conducting daily safety inspections and assuring all hazards and violations are abated. The Contractor is responsible for assuring that all Subcontractors adhere to the minimum Cal/OSHA safety requirements and that each Subcontractor has an effective Cal/OSHA IIPP (Illness and Injury Prevention Program) in place that specifically addresses all potential exposures, such as, but not limited to, fall protection, confined space, and trenching/shoring. These requirements shall apply continuously and not be limited to normal working hours. The Contractor shall be responsible for any delay costs or damages in the event the progress of Work is slowed or stopped due to a safety violation.

The Contractor shall designate a safety officer and have in place a health and safety plan in accordance with the laws of State of California and conduct safety meetings and document them in accordance with the law. The Contractor shall have the safety record available for inspection during working hours and shall submit job site safety meeting reports with each Application for Payment.

Prior to Contractor commencing construction project work on City property, Contractor

FOR COUNCIL APPROVAL ONLY

shall make available copies of its Health and Safety Plan (HASP) that meets or exceeds applicable Cal/OSHA regulations. The Contractor's HASP shall also meet or exceed the requirements of any applicable City-wide or departmental specific Injury and Illness Prevention Programs (IIPP) and other HASP programs, procedures, and plans. Potentially applicable HASP programs, procedures, and plans include, but are not limited to, the following:

1. Bloodborne Pathogens Exposure Control Plan;
2. Confined Space Entry Procedure;
3. Electrical Safety Program (Lockout/Tagout);
4. Emergency Action Plans (Site Specific);
5. Fire Prevention Plans (Site Specific);
6. Hazardous Waste Operations Emergency Response Plan (or Equivalent);
7. Hazard Communication Program (SDS's and Right-to-Know training);
8. Heat Illness & Prevention Plan;
9. Hearing Conservation Program;
10. Hot Work/Welding Procedure;
11. Job Hazard Analyses/Standard Operating Procedures;
12. Traffic Control & Flagging;
13. Excavation/Dig Safe Procedure;
14. Fall Protection Plan;
15. Personal Protective Equipment Plan;
16. Respirable Crystalline Silica Exposure Control Plan;
17. Respirator Program;
18. Soils Management Plan (for contaminated soils); and

FOR COUNCIL APPROVAL ONLY

19. Transite (Asbestos) Pipe Work Procedure.

Additionally, Contractor shall be responsible for complying with all City-wide and departmental specific safety requirements as identified in the Supplemental Conditions or presented at a pre-construction meeting.

Contractor shall inform City in advance of the quantity of chemical(s) to be used for the project and the total quantity of chemical(s) that will be brought onto City property. In addition, Contractor shall provide City with one copy of the Safety Data Sheet (SDS) for each chemical expected to be used to complete the project and for each chemical brought to the Work Site, regardless of whether such chemicals are ultimately used for the project.

The services of the Director in conducting construction review of the Contractor's performance is not intended to include review of the adequacy of the Contractor's Work methods, equipment, bracing or scaffolding, or safety measures, in, on, or near the construction site. If a City employee observes a safety violation, the City employee will report the violation to the Contractor who is then responsible for assuring the violation is abated.

The Contractor is hereby informed that Work on this project could be hazardous. The Contractor shall carefully instruct all personnel working in potentially hazardous Work areas as to potential dangers and shall provide such necessary safety equipment and instructions as are necessary to prevent injury to personnel and damage to property. Special care shall be exercised relative to Work underground.

All Work and materials shall be in strict accordance with all applicable State, City, County, and Federal Rules, Regulations, and Codes, and attention is drawn to the requirements of Cal/OSHA. The Contractor shall be solely responsible for compliance with all City, County and State blasting requirements and for any damages caused by its operations.

FOR COUNCIL APPROVAL ONLY

To ensure compliance with California Labor Code Section 6705, the Contractor shall submit to the City, at least five (5) Days in advance of excavation of any trench five feet (5') or more in depth, Working Drawings to the Director showing the design of shoring, bracing, sloping and other provisions to be made for worker protection from the hazard of caving ground during the excavation of such trench or trenches. If such Working Drawings vary from the shoring system standards established by the Cal/OSHA Construction Safety Orders of the Division of Industrial Safety, the plan shall be prepared and signed by a registered civil or structural engineer in the State of California. This in no way relieves the Contractor from the requirement of maintaining safety in all operations performed by the Contractor or the Contractor's Subcontractors and nothing in this section shall be deemed to allow the use of a shoring, sloping or protective system less effective than that required by the Cal/OSHA Construction Safety Orders of the Division of Industrial Safety Contractor's Working Drawings shall be subject to approval insofar as the details affect the character of the finished Work and for compliance with design requirements applicable to the construction when specified or called for, but details of the design will be left to Contractor who shall be responsible for the successful construction of the Work. The City shall approve Working Drawings before any Work involving such drawings is performed. Approval and/or acceptance by the City or its designated agent only constitutes acknowledgment of the submission and does not constitute review or approval of the designs, design assumptions or criteria, completeness of submissions, applicability to areas of intended use, nor implementation of the plans, which are solely the responsibility of the Contractor and its registered engineer.

The Contractor shall perform its Work as not to expose personnel to, or to discharge into the atmosphere from any source whatever, smoke, dust, asbestos, toxic chemicals or other air

FOR COUNCIL APPROVAL ONLY

contaminants in violation of the laws, rules, and regulations of the governmental entities having jurisdiction and shall bear full and exclusive responsibility for any release of hazardous or non-hazardous chemicals or substances during the course of the Work. The Contractor shall immediately report any such release to the City. The Contractor shall be solely responsible for all claims and expenses associated with the response to, removal and remediation of the release, including, without limitation, payment of any fines or penalties levied against the City by any agency as a result of such release and shall defend, indemnify, and save and hold harmless the City, its officers, agents, employees, and volunteers from any claims arising from such release. For purposes of this section only, the term "claims" shall include:

1. All notices, orders, directives, administrative or judicial proceedings, fines, penalties, fees, or charges imposed by any governmental agency with jurisdiction; and

2. Any claim, cause of action, or administrative or judicial proceeding brought against the City, its officers, agents, employees, and volunteers for any loss, cost (including reasonable attorneys' fees), damage or liability, sustained or suffered by any person or entity, including the City.

If the performance of the Work creates any hazardous wastes, those wastes shall be properly disposed of according to federal, state, and local laws, at the expense of the Contractor. The Contractor shall dispose of the wastes under its own EPA Generator Number. In no event shall the City be identified as the generator. The Contractor shall notify the City of any such hazardous wastes and the City reserves the right to a copy of the results of any tests conducted on the wastes, and, at its cost, to perform additional tests or examine those wastes, prior to disposition. The Contractor shall defend, indemnify, and save and hold harmless the City, its

FOR COUNCIL APPROVAL ONLY

officers, agents, employees, and volunteers from any claims arising from the disposal of the hazardous wastes, regardless of the absence of negligence or other malfeasance by the Contractor. Disposal of all Hazardous Materials must be done in accordance with all laws and regulations. Copies of required regulatory documentation including copies of final manifests shall be supplied to the City.

Contractors or Subcontractors removing one hundred or more square feet (100') of asbestos must be "Certified" in accordance with State law. All Work involving exposure to asbestos and all other hazardous materials shall be performed with protection of personnel in compliance with all applicable regulations and safety requirements including, but not limited to, California Code of Regulations Section 1529, Title 8.

Nothing in these General Conditions is to be construed to permit Work not conforming to governing codes. When Contract Documents differ from governing codes, the Contractor shall furnish and Install the higher standards called for without extra charge.

5-1.08 **SUBSURFACE EXCAVATIONS, NOTIFICATION.** The Contractor shall contact the regional notification center, "Underground Service Alert," and schedule its Work to allow ample time for the center to notify its members and, if necessary, for any member to field locate and mark its facilities. Without limiting the foregoing, the Contractor's attention is directed to Government Code Sections 4216 to 4216.9, and in particular Section 4216.2.

5-1.09 **PUBLIC SAFETY.** The Contractor shall assume all responsibility for public safety during the performance of its Work, and all costs arising therefrom shall be included in the Contract Price. Whenever the Contractor's operations create a condition hazardous to traffic or to the public, it shall furnish, erect and maintain, at its expense, such fences, barricades, lights, signs, and other devices and take such other protective measures as are

FOR COUNCIL APPROVAL ONLY

necessary to prevent accidents or damage or injury to the public. The Contractor shall establish the pedestrian detours with comparable lighting to the original pedestrian areas. The Contractor shall arrange for such flaggers as are necessary to give adequate warning to traffic or to the public of any dangerous conditions affecting traffic. For Work in a public right-of-way, the Contractor shall comply with the rules and regulations of the State, County, or local agency that owns the right-of-way.

The Contractor shall promptly and fully comply with and carry out, and shall without separate charge therefor to the City, all safety and first aid requirements prescribed by all applicable Federal, State, and local laws and regulations, rules, and orders. The Work shall be done in a safe manner; and the Contractor shall safeguard the safety and health of its employees, Subcontractors, and the people of local communities. The Contractor shall also be reasonable for ensuring that its Subcontractors comply with the provisions of this section.

Upon the failure of the Contractor to comply with any of the requirements of this section, the City shall have the authority, but not the duty, to stop the Work until such failure is remedied. The Contractor shall not be entitled to an adjustment of the Contract Time or an increase in the Contract Price due to any such suspensions.

When required by the Contract Documents, the Contractor shall construct, maintain, and remove detours for use of public traffic, without additional cost to the City, unless separate payment is specified in the Special Provisions.

The failure or refusal of the Contractor to construct and maintain detours at the proper time shall be sufficient cause for closing down the work until such detours are in satisfactory condition for use by public traffic.

Due care shall be exercised to avoid injury to existing improvements or facilities, utility

FOR COUNCIL APPROVAL ONLY

facilities, adjacent property and trees, shrubs, and other plants that are not to be removed.

Trees, shrubs and other plants that are not to be removed, and pole lines, fences, signs, survey markers and monuments, buildings and structures, conduits, pipe lines, sewer and waterlines, highway facilities, and any other improvements or facilities, under or above ground, that are within or adjacent to the work limit line shall be protected from injury or damage, and the Contractor shall provide and Install suitable safeguards to protect such objects from injury or damage. If such objects are injured or damaged by reason of the Contractor's operations, they shall be replaced or restored at the Contractor's expense. The facilities shall be replaced or restored to a condition as good as when the Contractor entered upon the Work Site, or as good as required by the Contract Documents if any such objects are part of the Work. The City may make or cause to be made such temporary repairs as are necessary to restore to service any damaged facility. The cost of such repairs shall be borne by the Contractor, and the costs may be deducted from any monies due or to become due to the Contractor under the Agreement.

The fact that any underground facilities is not shown on the Contract Drawings shall not relieve the Contractor of its responsibility pursuant to "Utility Facilities" in Section 2-1.12 elsewhere in the Contract Documents. It shall be the Contractor's responsibility, pursuant thereto, to ascertain the location of such underground improvements or facilities, which may be subject to damage by reason of its operations.

Full compensation for furnishing all labor, materials, tools, equipment and incidentals, and for doing all the Work involved in protecting or repairing property as specified in this section, shall be considered as included in the prices paid for the various Contract items of work and no additional compensation will be allowed therefor.

5-1.10 **EMERGENCIES.** In an Emergency affecting the safety of life, the

FOR COUNCIL APPROVAL ONLY

Work, or adjoining property, the Contractor, without special instructions or authorization from the City, shall act at its discretion to prevent such threatened loss or injury. In such an Emergency, the Contractor may perform such additional work as is reasonably required. Any compensation claimed by the Contractor on account of Work performed to an Emergency shall be determined in accordance with the provisions relating to Force Account payment contained elsewhere in the Contract Documents.

5-1.11 **APPRENTICES.** Attention is directed to Labor Code Sections 1777.5, 1777.6 and 1777.7 and Title 8, California Code of Regulations Section 200 et seq. In accordance with Section 1777.5, the Contractor shall secure the necessary certificates and shall contribute to the apprenticeship fund or funds, a provided therein. The Contractor shall require each Subcontractor who will perform work or labor or render service to the Contractor in or about the construction of the work to fully comply with Sections 1777.5 and 1777.6 of the Labor Code. To insure compliance and complete understanding of the law regarding apprentices, and specifically the required ratio thereunder, each Contractor or Subcontractor should, where some questions exist, contact the Division of Apprenticeship Standards, , or one of its branch offices prior to commencement of Work on the public works Contract. Responsibility for compliance with this section lies with the prime Contractor.

It is State and City policy to encourage the employment and training of apprentices on public works Contracts as may be permitted under local apprenticeship standards.

5-1.12 **FAIR LABOR STANDARDS ACT.** Attention is invited to the fact that the City has been advised by the Wage and Hour Division, U.S. Department of Labor, that Contractors engaged in construction Work are required to meet the provisions of the Fair Labor Standards Act of 1958 and as amended (52 Stat. 1060).

FOR COUNCIL APPROVAL ONLY

5-1.13 **WORKERS' COMPENSATION.** Pursuant to the requirements of Labor Code Section 1860, the Contractor will be required to secure the payment of workers' compensation to its employees in accordance with the provisions of Labor Code Section 3700.

Prior to the commencement of Work, the Contractor shall sign and file with the Director a certification in the following form:

> "I am aware of the provisions of Labor Code Section 3700 which require every employer to be insured against liability for workers' compensation or to undertake self-insurance in accordance with the provisions of that code, and I will comply with such provisions before commencing the performance of the Work of this Contract."

5-1.14 **AIR POLLUTION CONTROL AND ASBESTOS.** The Contractor shall comply with all air pollution control rules, regulations, ordinances and statutes which apply to any Work performed pursuant to the Contract, including any air pollution control rules, regulations, ordinances and statues, specified in Government Code Section 11017.

In the absence of any applicable air pollution control rules, regulations, ordinances or statutes governing solvents, all solvents, including but not limited to the solvent portions of paints, thinners, curing compounds, and liquid asphalt used on the project shall comply with the applicable material requirements of the applicable Air Quality Management District. All containers of solvent, paint, thinner, curing compound, or liquid asphalt shall be labeled to indicate that the contents fully comply with said requirements.

Unless otherwise provided in the Supplemental Conditions, material to be disposed of shall not be burned, either inside or outside the Premises.

The Contractor shall also comply with all rules, regulations, statutes and ordinances

FOR COUNCIL APPROVAL ONLY

regarding asbestos removal and disposal, including but not limited to, 42 U.S.C. Sections 7401, 7412 and 7601, 40 C.F.R. Part 61, Subpart M, and California Code of Regulations Section 1529, Title 8.

If the Contractor discovers that a building to be demolished or renovated contains asbestos containing material, the Contractor shall immediately cease Work and notify the City.

5-1.15 **USE OF PESTICIDES.** The Contractor shall comply with all local, state and federal rules and regulations of the Department of Food and Agriculture, the Department of Health, the Department of Industrial Relations and all other agencies which govern the use of pesticides required in the performance of the Work.

Pesticides shall include but shall not be limited to herbicides, insecticides, fungicides, rodenticides, germicides, nematocides, bactericides, inhibitors, fumigants, defoliants, desiccants, soil sterilants, and repellents.

Any substance or mixture of substances intended for preventing, repelling, mitigating, or destroying weed, insects, diseases, rodents, or nematodes and any substance or mixture of substances intended for use as a plant regulator, defoliant or desiccant shall be considered as pesticide.

5-1.16 **SOUND AND LIGHT CONTROL REQUIREMENTS.** The Contractor shall comply with all local sound control, light control, and noise level rules, regulations and ordinances which apply to any Work performed pursuant to the Contract. Work shall not begin before 7 a.m. nor occur after 7 p.m., unless otherwise permitted by the City.

Each internal combustion engine, used for any purpose on the Work or related to the Work, shall be equipped with a muffler, in good working order, of a type recommended by the manufacturer. No internal combustion engine shall be operated on the project without said

FOR COUNCIL APPROVAL ONLY

muffler.

5-1.17 **WEIGHT LIMITATIONS.** Unless expressly permitted elsewhere in the Contract Documents, the Contractor shall not operate construction equipment or vehicles of any kind which, laden or unladen, exceed the maximum weight limits set forth in Division 15 of the Vehicle Code over completed or existing base, surfacing, pavement or structures.

5-1.18 **ENVIRONMENTAL CLEARANCES; MITIGATION MONITORING PROGRAMS; AND REGULATORY AGENCY PERMIT REQUIREMENTS.** The Department will obtain all environmental clearances and other authorizations necessary for this project as set forth in the Contract Documents. The Contractor shall comply with the provisions, including giving notices during construction when required, of said authorizations. In the event the obtaining of said authorizations delays completion of all or any portion of the Work, an extension of time determined pursuant to the provisions in Section 6-1.08, "Liquidated Damages," of these General Conditions will be granted.

Contractor shall comply with: (1) all mitigation identified in the mitigation monitoring program (attached to and adopted as a component of the mitigated negative declaration or Environmental Impact Report) to mitigate impacts to protected natural resources; and (2) all related permit requirements issued by the regulatory agencies authorizing the project. Contractor shall defend, indemnify, and save and hold harmless the City, its officers, agents, employees, and volunteers from any fines, claims, suits, actions or regulatory sanctions of every name, kind and description brought forth, or on account of, damage to protected natural resources from or arising out of Contractor's negligence or willful misconduct in the performance of this Agreement.

5-1.19 **PERMITS AND LICENSES.** The Contractor acknowledges and agrees that, prior to the submission of its bid for the Work, it fully familiarized itself with the

FOR COUNCIL APPROVAL ONLY

requirements of all applicable federal, state, county and municipal laws, codes, rules, and regulations, as well as the conditions of any required licenses and permits.

The Contractor shall procure all permits and licenses, including any applicable building permits (except those procured or to be procured by the City which are listed elsewhere in the Contract Documents), in coordination with the Director, pay all charges and fees, and give all notices necessary and incident to the due and lawful prosecution of the Work. Contractor shall be responsible for applying, paying all fees, and coordination for obtaining all permits for completion of the Work. All permits and licenses shall be obtained in sufficient time to prevent delays to the Work. Contractor will apply to the City for reimbursement for such permits costs. Accordingly, Contractor should not include the anticipated costs for permits in its bid, as the necessary permit costs will be reimbursed by the City.

The California Environmental Quality Act (Public Resources Code, Section 21000 to 21177) may be applicable to permits, licenses and other authorizations which the Contractor must obtain from State or local agencies in connection with performing the Work. The Contractor shall comply with the provisions of that Act in obtaining such permits, licenses and other authorizations, and all permits, licenses and other authorizations shall be obtained in sufficient time to prevent delays to the Work.

The Contractor shall maintain the applicable Contractor's license as identified in the Notice to Contractors and City business license for the duration of the Work.

5-1.20 **WATER POLLUTION.** The Contractor shall comply with all water pollution control rules, regulations, ordinances and statutes which apply to any Work performed pursuant to the Contract, including any water pollution control rules, regulations, and statutes, specified by the most current State of California NPDES General Permit for Stormwater

FOR COUNCIL APPROVAL ONLY

Discharges Associated with Construction Activity.

The Contractor shall take all necessary precaution to protect streams, vernal pools, ponds, reservoirs, and lakes from pollution with fuels, oils, bitumen, calcium chloride, and other harmful materials as consistent with the law. Also, the Contractor shall conduct and schedule operations so as to avoid discharging pollutants, such as but not limited to: sediment and silt to the storm drain system. The storm drain system consists of all facilities that are designed to convey stormwater to the Waters of the State as defined in the California Water Code. The storm drain system includes, but is not limited to, all streets, gutters, drain inlets, roadside ditches, streams, vernal pools, ponds, and lakes. Care shall be exercised to preserve roadside vegetation beyond the limits of construction.

5-1.21 **PROTECTION AND USE OF PROPERTY.** The Contractor shall be responsible for and provide and maintain all proper temporary walkways, covered walkways, barriers, roads, guards, railings, lights, warning signs, and take precaution at all times to avoid injury or damage to any person or any property, and upon completion of the Work, or at other times as directed, restore Premises and adjacent property to a proper condition. In the event of such injury or damage, Contractor shall report such injury and damage to City within forty-eight (48) hours of occurrence.

The Contractor shall protect adjoining property and nearby buildings, including City buildings, City roads, and public streets or roads, from dust, dirt, debris, or the nuisance arising out of the Contractor's operations or storage practices, and, if ordered by the Director, the Contractor shall provide and Install suitable safeguards, approved by the Director, to protect such objects from damage. If such objects are damaged by reason of the Contractor's operations, they shall be replaced or restored at the Contractor's expense.

FOR COUNCIL APPROVAL ONLY

If the Contractor damages any buildings, roads, utilities, or other property which belong to the City, or any Department or agency thereof, then the Director, at his or her option, may retain from the money due under the Contract an amount sufficient to insure repair of the damage.

The Director may make or cause to be made such temporary repairs as are necessary to restore to service any such damaged facility. The cost of such repairs shall be borne by the Contractor and may be deducted from any moneys due or to become due the Contractor under the Contract.

5-1.22 **RESPONSIBILITY FOR DAMAGE AND INDEMNIFICATION.**

The City of Roseville, its officers, agents, employees, and volunteers, including but not limited to the Director and his or her designee, shall not be answerable or accountable in any manner: for any loss or damage that may happen to the Work or any part thereof; for any loss or damage to any of the materials or other things used or employed in performing the Work; for injury to or death of any person, either workers or the public; or for damage to property from any cause which might have been prevented by the Contractor, its workers, or anyone employed by the Contractor or the Contractor's Subcontractors.

The Contractor shall be responsible for any liability imposed by law and for injuries to, or death of, any person including, but not limited to, workers and the public, or damage to property resulting from defects or obstructions, or from any cause whatsoever during the progress of the Work or at any time before its completion and final Acceptance.

To the fullest extent allowed by law, the Contractor shall defend (through counsel acceptable to the City), indemnify, and save and hold harmless the City, and its respective officers, agents, Subcontractors, employees, and volunteers, and the successors and assigns of

FOR COUNCIL APPROVAL ONLY

any of them, (hereinafter referred to as "Indemnitees") from and against all claims, demands, liability, suits, actions, costs or expenses for any and all loss or damage, including but not limited to, personal injury, property damage, or economic loss, arising out of or resulting from allegations of (1) Contractor's use of the City's property or any activities or Work performed hereunder by the Contractor; (2) the Contractor's performance of the Work under the Agreement; or (3) the Contractor's breach of any provision of the Agreement. The duty of the Contractor to indemnify and save harmless includes the duties to defend as set forth in Civil Code Section 2778. The only exception to these provisions is that the Contractor's obligations under this section will not apply to the extent that the claims, demands, liability, suits, actions, costs or expenses are caused by Indemnitees' active negligence, willful misconduct, criminal acts, or for defects in design furnished by the Indemnitees, misconduct, criminal acts, or for defects in design furnished by the Indemnitees.

The Contractor waives any and all rights to any type of express or implied indemnity against the City, its officers, agents, employees, or volunteers.

The Contractor's responsibility for such defense and indemnity obligations shall survive the termination or completion of this Contract for the full period of time allowed by law. The defense and indemnity obligations of this Contract are undertaken in addition to, and shall not in any way be limited by, the insurance obligations contained in this Contract. The parties intend that the defense and indemnity obligations in this Contract shall be broadly construed.

Any person, firm or corporation that Contractor authorizes to Work on the City's property including Subcontractors, shall be deemed to be an agent of the Contractor for purposes herein, shall be subject to all the applicable terms herein, and shall be within the scope of the Contractor's indemnity obligation described herein.

FOR COUNCIL APPROVAL ONLY

In addition to any remedy authorized by law, so much of the money due the Contractor under and by virtue of the Contract as shall be considered necessary by the Department may be retained by the City until disposition has been made of such suits or claims for damages.

The retention of money due the Contractor shall be subject to the following:

A. The City will give the Contractor thirty (30) Days' notice of its intention to retain funds from any partial payment which may become due to the Contractor prior to Acceptance of the Contract. Retention of funds from any payment made after Acceptance of the Contract may be made without such prior notice to the Contractor.

B. No retention of additional amounts out of partial payments will be made if the amount to be retained does not exceed the amount being withheld from partial payments pursuant to Section 7-1.07, "Progress Payments," of these General Conditions.

C. If the City has retained funds and it is subsequently determined that the City is not entitled to be indemnified and saved harmless by the Contractor in connection with matter for which such retention was made, the Department shall be liable for interest on the amount retained at the legal rate of interest for the period of such retention.

5-1.23 **INSURANCE COVERAGE.**

A. Evidence of Maintenance Required. The Contractor shall, at its expense, procure and at all times maintain in full force and effect at a minimum the insurance required by this section on all of its operations; and the Contractor shall not allow any Subcontractor to commence work until similar insurance required of the Subcontractor has been obtained and filed. An original Certificate of Insurance, and copies of all required endorsements, all in a form approved by the Risk Manager, evidencing all required coverage or policies shall be filed after the award of the bid and prior to approval of the Contract by the City Council. Contractor shall

FOR COUNCIL APPROVAL ONLY

provide ten (10) days prior written notice to the City of any reduction of coverage limits or cancellation of the coverage or policies shall be given to the City of Roseville as Certificate holder.

B. Qualifying Insurers. With the exception of the State Compensation Insurance Fund, all required insurance policies shall be issued by companies acceptable to the City and licensed to do business in the State of California and who hold a current policy holders alphabetic and financial size category rating of not less than AVII according to the most recent issue of Best's Insurance Reports.

C. Insurance Required.

1. Commercial General Liability (CGL): Insurance Services Office Form CG 00 01 covering CGL on an "occurrence" basis, including products and completed operations with limits of no less than Two Million Dollars ($2,000,000) per occurrence for bodily injury, personal injury and property damage for projects under One Million Dollars ($1,000,000) and limits of no less than Five Million Dollars ($5,000,000) per occurrence for bodily injury, personal injury and property damage for projects over One Million Dollars ($1,000,000). If a general aggregate limit applies, either the aggregate limit shall apply separately to this project or the general aggregate limit shall be twice the required occurrence limit.

The Commercial General Liability insurance shall include the following, copies of which shall be provided:

a. Inclusion of the City of Roseville, and its officers, agents, employees, and volunteers, as additional insureds (except for workers' compensation) as respects services or operations under the Contract. The additional insured endorsement for the general liability policy shall be at least as broad as the ISO CG 2010 10 01 combined with ISO CGL

FOR COUNCIL APPROVAL ONLY

Endorsement CG 2037 10 01. Any other endorsement must be approved in writing by the City. Endorsements must include coverage for on-going and completed operations, which coverage shall be maintained for four (4) years following completion of the Project. Endorsements shall cover the City of Roseville, its officers, agents, employees, and volunteers.

b. The insurance shall provide coverage for claims by one insured against another insured and the policies shall not contain any cross-suits exclusions, cross-liability exclusions, or insured versus insured exclusions. The policies shall not contain any classification exclusions purporting to deny coverage for any work to be performed by Contractor or any of its Subcontractors.

c. Stipulation that the insurance is primary and noncontributory, as evidenced by a separate endorsement (CG 20 01 04 13 or an equivalent) or section of the policy, and that neither the City nor its insurers will be called upon to contribute to a loss.

d. Such insurance shall specifically cover the contractual liability of the Contractor.

e. Any available insurance proceeds in excess of the specified minimum insurance coverage requirements and limits shall be available to the additional insureds. Furthermore, the requirements for coverage and limits shall be: (1) the minimum coverage and limits specified in this Agreement; or (2) the full coverage and maximum limits of any insurance proceeds available to the named insureds, whichever is greater.

f. Waiver of subrogation endorsement.

g. The Contractor shall furnish a certificate for the period covered.

2. Automobile Liability: Insurance Services Office Form Number CA 0001 covering Code 1 (any auto), or if Contractor has no owned autos, Code 8 (hired) and Code 9

FOR COUNCIL APPROVAL ONLY

(non-owned), with limits of no less than One Million Dollars ($1,000,000) per accident for bodily injury and property damage.

3. Workers' Compensation: In accordance with the provisions of the California Labor Code, Contractor is required to be insured against liability for Workers' Compensation or to undertake self-insurance. Statutory Workers' Compensation and Employers' Liability of at least One Million Dollars ($1,000,000) shall cover all Contractors staff while performing any work incidental to the performance or this Agreement.

4. Professional Liability: Professional Liability (Errors and Omission) Insurance appropriate to Contractor's profession, with a limit of liability not less than One Million Dollars ($1,000,000) per occurrence or claim and Two Million Dollars ($2,000,000) aggregate to cover all design and engineering services rendered by Contractor pursuant to the Agreement. Coverage must commence from the first day that Contractor or any of its Subcontractors provided any design or engineering services in connection with the Project.

5. Builder's Risk/Course of Construction Insurance (If Required by Risk Management): The Contractor shall be responsible for all loss, damage or destruction whatsoever to the work called for by this Contract until the approval of a Notice of Completion or acceptance of the Work if no Notice of Completion is to be recorded.

The Contractor shall secure "All Risk" type of builder's Risk Insurance of the type covering one hundred percent (100%) of the value of the work performed under this Contract (the value is presumed to be the Contract amount unless otherwise stated in Supplemental Conditions) and all materials, equipment, or other items to be incorporated therein while the same are located at the construction site, a bonded warehouse, or its place of manufacture. At any time, the policy shall cover the value of the work completed. The policy shall cover hazards

FOR COUNCIL APPROVAL ONLY

including the losses due to fire, explosion, hail, rain, lightning, flood (separate insurance as needed), vandalism, malicious mischief, wind, collapse, aircraft, and smoke.

The policies providing such insurance shall name the City as a loss payee as its respective interests may appear, and certified copies of such policies shall be filed with the City. The maximum deductible allowable under the Builder's All Risk policy shall be five percent (5%) of the Contract amount.

Builder's Risk Insurance is not required for coverage of losses in excess of five percent (5%) of the Contract amount for damages resulting from earthquake in excess of a magnitude of 3.5 on the Richter scale, or tidal waves. Coverage in the amount of five percent (5%) of the Contract amount for such losses is required.

6. Pollution Coverage: Contractor shall procure pollution liability coverage or other insurance covering claims for bodily injury or property damage arising out of the abatement, removal, storage, transportation, or other exposure to hazardous materials or pollutants, in limits not less than Two Million Dollars ($2,000,000). Contractor shall add the City and all parties required to be indemnified by Contractor as additional insured on all pollution liability policies.

7. Higher Coverage Limits: If Contractor maintains higher coverage limits than the amounts shown above, then the City requires and shall be entitled to coverage for the higher coverage limits maintained by Contractor. Any available insurance proceeds in excess of the specified minimum limits of insurance and coverage shall be available to the City.

8. Claims Made Coverage: Liability insurance coverage may not be written on a “claims made” or modified occurrence basis. The Certificate of Insurance must clearly provide that the coverage is on an “occurrence” basis.

FOR COUNCIL APPROVAL ONLY

5-1.24 **OTHER INSURANCE PROVISIONS.**

A. The requirements of the Standard Specifications as to types and limits of insurance coverage to be maintained by the Contractor, and any approval of insurance by the City, are not intended to, and shall not in any manner limit or qualify the liabilities and obligations otherwise assumed by the Contractor pursuant to the Contract, including, but not limited to, the provisions concerning indemnification, nor preclude the City from taking any other action available to it under any other provision of the Contract or law.

B. The City acknowledges that some insurance requirements contained in these Standard Specifications may be fulfilled by self-insurance on the part of the Contractor. However, this shall not in any way limit liabilities assumed by Contractor under the Contract. Any self-insurance must be approved in writing by the City, in its sole discretion and shall not reduce the limits of liability. Any deductibles or self-insured retentions ("SIR") must be declared on the certificate of insurance and approved by City in writing. Policies containing any SIR provision shall provide or be endorsed to provide that the SIR may be satisfied by either the named insured or City. City reserves the right to obtain a full certified copy of any insurance policy and endorsements. The failure to exercise this right shall not constitute a waiver of such right.

FOR COUNCIL APPROVAL ONLY

C. The Contractor agrees to include in its contracts with all subcontractors the same requirements and provisions of this Contract, including the indemnity and insurance requirements, to the extent they apply to the scope of the subcontractor's work. Furthermore, the Contractor shall require its subcontractors to agree to be bound to the Contractor and the City in the same manner and to the same extent as the Contractor is bound to the City under this Contract. Additionally, the Contractor shall obligate its subcontractors to comply with these

same provisions with respect to any tertiary subcontractor, regardless of tier. A copy of the City's indemnity and insurance provisions will be furnished to the subcontractor or tertiary subcontractor upon request. Alternatively, the Contractor may insure subcontractor(s) under its own policy.

D. The City, its officers, agents, employees, and volunteers are to be covered as insureds with respect to liability arising out of automobiles owned, leased, hired or borrowed by or on behalf of the Contractor; and with respect to liability arising out of work or operations performed by or on behalf of the Contractor including materials, parts or equipment furnished in connection with such work or operations. Coverage shall not extend to any indemnity coverage for the active negligence of the additional insured in any case where an agreement to indemnify the additional insured would be invalid under California Insurance Code Section 11580.04.

E. The limits of insurance required in this Contract may be satisfied by a combination of primary and excess insurance. Any excess insurance shall contain or be endorsed to contain a provision that such coverage shall also apply on a primary and noncontributory basis for the benefit of the City (if agreed to in a written contract) before the City's own insurance shall be called upon to protect it as a named insured.

F. The insurance procured by Contractor shall be subject to the approval of the City, but any acceptance of insurance certificates by the City shall in no way limit or relieve Contractor of its duties and responsibilities under the Agreement.

G. Contractor shall be responsible for all premiums, deductibles, and self-insured retention applicable to the insurance it is required to procure under the Contract. All deductibles or self-insured retentions over five hundred thousand dollars ($500,000) must be approved by the City, in writing. Contractor shall be responsible for all deductibles, self-insured

FOR COUNCIL APPROVAL ONLY

retention payments, and/or increased premiums incurred if the City's policies of insurance are forced to cover damages or respond to claims for which Contractor or its Subcontractors were obligated to provide insurance under the Contract.

H. Failure of the City to enforce in a timely manner any of the requirements of these insurance provisions shall not act as a waiver to enforcement of any of these provisions at a later date.

I. Contractor's indemnity obligations shall not be limited by these insurance provisions and shall survive the expiration of the Contract and the insurance provisions of the Contract shall likewise not be limited by the indemnity provisions of the Contract.

J. THE CITY RESERVES THE RIGHT TO WITHHOLD ANY PROGRESS PAYMENTS TO THE CONTRACTOR IN THE EVENT OF NONCOMPLIANCE WITH ANY INSURANCE REQUIREMENTS.

5-1.25 **THIRD PARTY BENEFICIARY.** No provisions in the Contract Documents shall in any way inure to the benefit any third party (including the public at large or any member thereof) so as to constitute such person a third party beneficiary of the Contract, or of any term or condition or other provision of the Contract or otherwise give rise to any cause of action in any person not a party to the Agreement, except as expressly provided elsewhere in the Contract Documents.

5-1.26 **COORDINATION AND ACCESS.** The Contractor acknowledges that the City may award, or has already awarded, other construction contracts for additional work or may perform additional work with its own forces and that such work may affect the Work under this Agreement. Additionally, the Contractor acknowledges that the State and other public and private agencies may be granted a right-of-entry by the City for the purpose of constructing

FOR COUNCIL APPROVAL ONLY

facilities within and adjacent to the Work Site. It is the obligation of the Contractor to coordinate its Work with the work of others working within or adjacent to the City's property.

During performance of its Work, the Contractor shall not have exclusive access to or use of the work areas. The City may also require that certain facilities and areas be used concurrently by the Contractor and by other contractors working in the area. When two (2) or more contractors are employed on related or adjacent City work, each shall conduct its operations in such a manner as not to cause any unnecessary delay or hindrance to the other. Each contractor shall be responsible to the other for all damage to any work, to persons or property caused to the other by its operations, and for loss caused the other due to any unnecessary delays or failure to finish the work within the time specified for completion.

If any party of the Contractor's Work depends on the work of any other contractor and/or the City for proper execution and/or results, the Contractor shall promptly notify the City of any discrepancies and/or defects in said other work that would render its work unsuitable for proper execution and/or results prior to proceeding with the Contractor's own Work. If it becomes necessary, the City will resolve coordination and access problems.

The Contractor and its representative in charge of the Work shall familiarize themselves with the City's property and Work Site, and adjacent surroundings in the vicinity of said Wok, and any private or public operations on adjoining properties.

5-1.27 **OCCUPANCY BY THE DEPARTMENT PRIOR TO ACCEPTANCE.** The City may at any time notify the Contractor in writing that it intends to take Beneficial Occupancy of any portion of the Work even though the Work may not be substantially complete. Unless the reason for the City's taking Beneficial Occupancy is that the Contractor has not completed the Work (or portions thereof) in accordance with the Contract

FOR COUNCIL APPROVAL ONLY

Time, the City's Beneficial Occupancy shall relieve the Contractor from its responsibility for maintenance, loss or damage to that portion of the Work for which the City has taken Beneficial Occupancy other than that resulting from the Contractor's act or omission, negligence, willful misconduct or breach of warranty.

Should the Work (or portion thereof) not be completed in accordance with the Construction Schedule within the Contract Time (as adjusted under the terms of the Contract Documents), the City shall have the right, but not the obligation, to take Beneficial Occupancy of the Work. In such event, the Contractor shall not be entitled to any additional compensation on account of said occupancy by the City, nor shall the Contractor be relieved of any of its responsibilities under the Contract Documents, including, without limitation, Contractor's obligation to complete the Work in accordance with the Construction Schedule.

Beneficial Occupancy shall not be deemed an Acceptance by the City either of the Work or of any portion thereof, nor will it relieve the Contractor of full responsibility for correcting defective Work or materials found at any time before the formal written Acceptance of the entire Contract by the Director or during the full warranty period after such Acceptance, as provided in Section 7-1.12, "Warranty," of these General Conditions.

The City's Beneficial Occupancy shall not relieve the Contractor of its responsibility to maintain all insurance and bonds required under the Contract Documents until the entire project is accepted by the City.

5-1.28 **RIGHT TO OPERATE UNSATISFACTORY FACILITIES AND EQUIPMENT.** If, after Installation, the operation or use of the facilities or equipment to be furnished under this Contract proves to be unsatisfactory to the Director, the City shall have the right to operate and use such facilities or equipment until they can, without damage to the City,

FOR COUNCIL APPROVAL ONLY

be taken out of service for correction or replacement. Such period of use of the defective facilities or equipment, pending correction or replacement, shall in no way decrease the warranty period required for the acceptable corrected or replaced facilities or equipment.

5-1.29 **CONTRACTOR'S RESPONSIBILITY FOR THE WORK.** Except as otherwise provided herein, the Contractor shall have the charge and care of the Work and shall bear the risk of injury or damage to any part of the Work by the action of the elements or from any other cause whether arising from the execution or from the nonexecution of the Work until the Acceptance of the Contract by the Director. The Contractor shall rebuild, repair, restore, and make good all injuries or damages to any portion of the Work occasioned by any cause before its completion and Acceptance, and shall bear the expense thereof. In case of suspension of Work from any cause whatever, the Contractor shall be responsible for the Work and it shall also be responsible for all materials, and shall properly store them if necessary, and shall provide suitable drainage and erect temporary structures where necessary.

The Contractor will be relieved of responsibility for any injury or damage to the Work caused by the following:

A. An earthquake in excess of a magnitude of 3.5 on the Richter Scale or a tidal wave, when the effect of such has been proclaimed a disaster or state of emergency by the Governor of the State of California or by the President of the United States, or was of such magnitude at the site of the Work as to have been sufficient to have caused a proclamation of disaster or state of emergency, had it occurred in a populated area.

B. Occupancy and use by the Department or the public prior to the completion of the entire project.

C. Acts of the Federal Government or the public enemy.

FOR COUNCIL APPROVAL ONLY

5-1.30 **RESPONSIBILITY FOR UTILITIES.** The Contractor shall be responsible at its own cost for any and all Work, expense or special precautions caused or required by the existence or proximity of utilities encountered in performing the Work, including without limitation, repair of any or all damage and all hand or exploratory excavation required. The Contractor is cautioned that such utilities may include communication cables or electrical cables which may be high voltage, and when working or excavating in the vicinity of such cables, or the ducts enclosing such cables, the Contractor shall undertake at its own cost any special precautions required. Suitable warning signs, barricades, and safety devices shall be erected as necessary or required.

However, if during the course of the Work the Contractor encounters utility Installations which are not shown or indicated in the Contract Documents or which are found in a location substantially different from that shown, and such utilities are not reasonably apparent from visual examination, then the Contractor shall promptly notify the Director in writing. Where necessary for the Work of the Contract, the Director shall issue a written order to the Contractor to make such adjustments, rearrangement, repair, removal, alteration, or special handling of such utility, including repair of the damaged utility. The Contractor shall perform the Work described in such written order, and compensation therefor will be made in accordance with Section 3 of these General Conditions relating to changes in the Work. Except for the items of cost specified in said Section 3, the Contractor shall receive no compensation for any other cost, damage, delay, interference, or hindrance to him or her due to the presence of such utility. If the Contractor fails to give the notice specified above and thereafter acts without instructions for the Director, then the Contractor shall be liable for any or subsequent to discovery thereof, and the Contractor shall repair and make good such damage at its own cost.

FOR COUNCIL APPROVAL ONLY

The precise location of underground facilities can only be determined by careful probing or hand digging in compliance with Article 6 of the Cal/OSHA Construction Safety Orders which states in part:

> "Prior to opening an excavation, effort shall be made to determine whether underground installations, i.e., sewer, water, fuel, electric lines, etc., will be encountered, and if so, where such underground installations are located. When the excavation approaches the approximate location of such an installation, the exact location shall be determined by careful probing or hand digging, and, when it is uncovered, adequate protection shall be provided for the existing installation."

The location of known existing utilities and pipelines are shown on the Contract Drawings in their approximate locations. Some of the locations include multiple conduits. The Contractor shall exercise care in avoiding damage to those facilities which are to remain in service subsequent to the construction of the particular new facility involved and the Contractor will be held responsible for any repairs if damaged. The Contractor shall also exercise care in maintaining those pipes and facilities required for continuing operation of the existing facilities until such time as they can be abandoned. There is no guarantee that all utilities or obstructions are shown on the Contract Drawings or that the locations indicated are accurate.

The Contractor shall exercise extreme caution in working in the area adjacent to the existing pipelines and utility services. It is essential that all the existing facilities be maintained in service. Construction of the connections between the existing facilities and the new facilities shall be at times and during periods acceptable to the City. The Contractor shall advise the Director in writing of its proposed Construction Schedule for these connections at least forty-eight (48) hours in advance.

FOR COUNCIL APPROVAL ONLY

The Contractor shall uncover all piping and conduits, to a point one foot (1') below the pipe, where crossings, interferences, or connections are shown on the Contract Drawings, prior to trenching or excavating for any pipe or structures, to determine actual elevations. New pipelines shall be laid to such grade as to clear all existing facilities which are to remain in service. If the Contractor does not expose all required utilities, it shall not be entitled to additional compensation for Work necessary to avoid interferences nor for repair to damaged utilities. Excavations around underground electrical ducts and conduits shall be performed using extreme caution to prevent injury or damage to workers and to the electrical ducts or conduits.

5-1.31 **PROPERTY RIGHTS IN MATERIALS.** Nothing in the Contract shall be construed as vesting in the Contractor any right of property in the materials used after they have been attached or affixed to the Work or soil or after partial payment has been made as provided in Section 7-1.07, "Progress Payments," of these General Conditions for material delivered on the ground or stored subject to or under the control of the City and unused. All such material shall become the property of the City upon being so attached or affixed or upon payment for materials delivered on the ground or stored subject to or under the control of the City and unused, as provided in said Section 7-1.07.

5-1.32 **COURT ORDERED DELAY.** If, pursuant to court order, the Department temporarily suspends performance of all or any portion of the Work, an extension of time determined pursuant to the provisions in Section 6-1.08, "Liquidated Damages," of these General Conditions will be granted.

5-1.33 **NO PERSONAL LIABILITY.** Neither the Director, nor any other officer or authorized employee of the City, shall be personally responsible for any liability arising under or by virtue of the Contract.

FOR COUNCIL APPROVAL ONLY

5-1.34 **RIGHTS IN LAND AND IMPROVEMENTS.** The Contractor shall make no arrangements with any person or entity to permit occupancy or use of any land, structure or building within the limits of the Work, for any purpose whatsoever, either with or without compensation, in conflict with any agreement between the City and any third party owner, former owner, or tenant of such land, structure or buildings. The Contractor shall not occupy City-owned property outside the limit of the Work shown on the Contract Drawings unless it obtains prior approval.

5-1.35 **ANTITRUST CLAIMS.** The Contractor's attention is directed to the following provision of Public Contract Code Section 7103.5(b), which is applicable to the Contractor and its Subcontractors:

> " In entering into a public works contract or a subcontract to supply goods, services, or materials pursuant to a public works contract, the contractor or subcontractor offers and agrees to assign to the awarding body all rights, title, and interest in and to all causes of action it may have under Section 4 of the Clayton Act (15 U.S.C. Sec. 15) or under the Cartwright Act (Chapter 2 [commencing with Section 16700] of Part 2 of Division 7 of the Business and Professions Code), arising from purchases of goods, services, or materials pursuant to the public works contract or the subcontract. This assignment shall be made and become effective at the time the awarding body tenders final payment to the contractor, without further acknowledgement by the parties."

5-1.36 **RIGHTS TO DRAWINGS, TECHNICAL DATA PATENTS.** Shop

FOR COUNCIL APPROVAL ONLY

Drawings and Working Drawings submitted to the City by the Contractor, Subcontractor or any lower tier Subcontractor pursuant to the Agreement, are the property of the City and the City may use, and disclose in any manner and for any purpose, Shop Drawings and Working Drawings delivered under the Contract.

Technical Data including manuals or instructional materials, computer or microprocessor software which are delivered or submitted to the City by the Contractor, Subcontractor, or any lower tier Subcontract pursuant to the Contract are the property of the City, and the City may use or disclose same in any manner and for any purpose.

The Contractor shall assume all costs arising from the use of patented materials, equipment, devices, or processes used on or incorporated in the Work, and shall defend, indemnify and save and hold harmless the City, and its duly authorized representatives, from all suits at law, or in equity, and actions of every nature for, or on account of the use of any patented materials, equipment, devices or processes. In case some materials, equipment, devices or processes are held to constitute an infringement and their use enjoined, the Contractor, at its expense, shall:

1. Secure for the City the right to continue using said materials, equipment, devices or processes by suspension of the injunction or by procuring a license or licenses; or
2. Replace such materials, equipment, devices, processes; or
3. Modify them so that they become non-infringing or remove the enjoined materials, equipment, devices or processes and refund the sums paid therefor without prejudice to any other rights of the City.

5-1.37 **PAYMENT OF TAXES.** Contractor shall pay all taxes and duties applicable to and assessable against any Work, equipment, materials, services, processes, and

FOR COUNCIL APPROVAL ONLY

operations incidental to or involved in the Agreement, including but not limited to, retail sales and use, transportation, export, import, business, and special taxes. The Contractor is responsible for ascertaining and acquainting itself with such taxes and making all necessary arrangements to pay them. The Contractor will maintain records that are auditable records, and these records shall be subject to the City's review to verify that Contractor's tax payments are current at all times.

The Contract Price paid for the Work shall include full compensation for all taxes which the Contractor is required to pay, whether imposed by Federal, State or local government, including, without being limited to, Federal excise tax. No tax exemption certificate nor any document designed to exempt the Contractor from payment of any tax will be furnished to the Contractor by the Department, as to any tax on labor, services, materials, transportation, or any other items furnished pursuant to the Contract.

The Contractor shall withhold and pay any and all sales and use taxes, withholding taxes, whether Federal, State, or local, Social Security taxes, State Unemployment Insurance charges and all other taxes which are now or hereafter may be required to be paid or withheld under any laws.

5-1.38 **GRATUITIES AND CONFLICT OF INTEREST.** The Contractor shall not offer or provide gratuities in the form of gifts, entertainment, loans, meals, rewards, and/or services to representatives of the City, including but not limited to, officers, employees, agents, Engineering Service Consultants, Consulting Engineers and Architects, Inspectors and/or Testing Agencies retained by the City. If it is found that the Contractor has violated this provision, the Contract may be subject to termination for default as defined elsewhere in these General Conditions.

FOR COUNCIL APPROVAL ONLY

During the term of the Contract and until the final payment has been made to the Contractor, the Contractor shall not employ or compensate in any manner whatsoever, the City's officers, employees and authorized representatives, agents, and any Engineering Service Consultants, Consulting Engineers and Architects, Inspectors, and/or Testing Agencies retained by the City. Any exception to the employment or compensation to any of the above named parties must be made in writing by the City. If the Contractor offers or provides employment or compensation to those named above during the term of the Contract, the Contract may be subject to termination for default.

5-1.39 **COOPERATION.** Should construction be under way by City forces or other forces or by other Contractors within or adjacent to the limits of the Work or should Work of any other nature be under way by such forces within or adjacent to said limits, the Contractor shall cooperate with all such forces to the end that any delay, interference or hindrance to their Work will be avoided. The right is reserved to perform other or additional Work at or near the site at any time, by the use of such forces.

5-1.40 **DIGGING TRENCHES OR OTHER EXCAVATIONS.** In the event any work involves digging trenches or other excavations that extend deeper than four feet (4') below the surface, City and Contractor shall comply with the following:

A. The Contractor shall promptly, and before the following conditions are disturbed, notify City in writing of any:

1. Material that the Contractor believes may be material that is hazardous waste, as defined in Section 25117 of the Health and Safety Code, that is required to be removed to a Class I, Class II, or Class III disposal site in accordance with provisions of existing law.

FOR COUNCIL APPROVAL ONLY

2. Subsurface or latent physical conditions at the site differing from those made available to Contractor for inspection as provided in the project proposal.

3. Unknown physical conditions at the site of any unusual nature, different materially from those ordinarily encountered and generally recognized as inherent in Work of the character provided for in the Contract.

B. The City shall promptly investigate the conditions, and if it finds that the conditions do materially so differ, or do involve hazardous waste, and cause a decrease or increase in the Contractor's cost of, or the time required for, performance of any part of the Work shall issue a Change Order under the procedures described in the Contract.

C. In the event that a dispute arises between the City and the Contractor whether the conditions materially differ, or involve hazardous waste, or cause a decrease or increase in the Contractor's cost of, or time required for, performance of any part of the Work, the Contractor shall not be excused from any scheduled completion date provided for by the Contract, but shall proceed with all work to be performed under the Contract. The Contractor shall retain any and all rights provided either by contract or by law which pertain to the resolution of disputes and protests between the contracting parties. However, no claim of the Contractor under this clause shall be allowed unless the Contractor has given the notice required by this Section. No claim by the Contractor for an equitable adjustment hereunder shall be allowed if asserted after final payment under this Contract.

5-1.41 **CONTRACTOR REGISTRATION.** No contractor or subcontractor may work on a public works project unless registered with the Department of Industrial Relations pursuant to Labor Code section 1725.5. During the performance of this Contract, the Contractor and its subcontractors shall have a continuing legal obligation to maintain current

FOR COUNCIL APPROVAL ONLY

registration with the Department of Industrial Relations. The Contractor is hereby notified that this project is subject to compliance monitoring and enforcement by the Department of Industrial Relations.

5-1.42 **CITY OF ROSEVILLE ENCROACHMENT PERMITS AND RIGHTS-OF-WAY.** The Contractor need not obtain a separate encroachment permit from the City prior to construction within street rights-of-way or other City rights-of-way. Execution of the Contract by the City shall be deemed an encroachment permit for work required by the Contract within rights-of-way. All work shall conform to the rules and regulations of encroachment permits and shall be subject to the inspection and approval of the Director and City Engineer.

To the extent indicated in the Contract Drawings, the City will provide the rights-of-way over private lands or the site to enable the Contractor to perform its work. The Contractor shall be solely responsible for securing any additional rights-of-way desired by the Contractor. The City will not be a party to nor assume any liability for any separate agreements reached between the Contractor and any third parties with respect to these additional rights-of-way. The Contractor shall procure evidence that agreements are in place with said third parties before the Contractor uses those areas covered by the agreements. Any damage to such private lands caused by the Contractor's operations shall be the sole responsibility of the Contractor.

5-1.43 **CALIFORNIA AIR RESOURCES BOARD REGULATIONS.** The Contractor shall comply with any applicable regulations of the California Air Resources Board ("CARB") set forth below.

A. In-Use Off-Road Diesel-Fueled Fleets. If the Contractor will use vehicles subject to Cal. Code Regs., tit. 13, §§ 2449 et seq. for the project, it shall submit a valid

FOR COUNCIL APPROVAL ONLY

Certificate of Reported Compliance to the City as provided in § 2449(n).

B. Advanced Clean Fleets. Pursuant to Cal. Code Regs., tit. 13, § 2013(i)(1), the Contractor shall submit to the City either a signed statement stating that it is not subject to the High Priority and Federal Fleets regulation of title 13, CCR section 2015 through 2015.6, or a document evidencing that it is listed on the CARB Advanced Clean Fleets webpage as a compliant fleet.

FOR COUNCIL APPROVAL ONLY

SECTION 6

PROSECUTION AND PROGRESS

6-1.01 **SUBLETTING AND SUBCONTRACTING.** The Contractor shall be responsible for all Work performed under the Contract. The Contractor shall give its personal attention to the fulfillment of the Contract and shall keep the Work under its control. Nothing in the Contract Documents shall create any contractual relationship between the City and any Subcontractor. The Contractor is fully responsible to the City for the acts and omissions of its Subcontractors of any tier. When any Subcontractor fails to prosecute a portion of the Work in a manner satisfactory to the Director, that Subcontractor shall not again be employed on the Work. Although the sections of the Contract may be arranged according to various trades, or general grouping of the Work, the Contractor is not obligated to sublet the Work in such manner. The Director will not arbitrate disputes among Subcontractors or between Contractor and one or more Subcontractors concerning responsibility for performing any part of the Work.

The on-site production of materials produced by other than the Contractor's own forces shall be considered as subcontracted. The erection, establishment or reopening of on-site plants for production of materials and the operation thereof in the production of materials for use on the Work shall conform to the requirements relating to labor set forth in the Contract Documents.

The Contractor shall also be responsible for coordinating the Work performed by Subcontractors and Suppliers.

The Contractor shall not substitute any person as Subcontractor in place of a Subcontractor listed on its bid proposal without the written approval of the Director. Substitutions must be in accordance with the provisions of the "Subletting and Subcontracting

FOR COUNCIL APPROVAL ONLY

Fair Practices Act" beginning with Public Contract Code Section 4100. Violations of this Act by the Contractor may subject it to penalties which may include cancellation of Contract, Assessment of ten percent (10%) of the Subcontractor's bid, and disciplinary action by the Contractors State License Board.

The Contractor shall pay any Subcontractors approved by the City for work that has been satisfactorily performed no later than seven (7) Days from the date of Contractor's receipt of progress payments by the City. Within seven (7) Days after receipt from the City of funds attributable to work performed by a Subcontractor, Contractor shall release any retainage payments withheld to the Subcontractor. In the event Contractor does not make progress payments or release retention to Subcontractors in accordance with the time period specified herein, Contractor may be subject to prompt payment penalties per statute.

6-1.02 **ASSIGNMENT.** The performance of this Contract may not be assigned, except upon the written consent of the City Council of the City of Roseville. Consent will not be given to any proposed assignment which would relieve the original Contractor or its surety of their responsibilities under the Contract nor will the City consent to any assignment of a part of the Work under the Contract.

The Contractor may assign moneys due or to become due to it under the Contract and such assignment will be recognized by the City, if given proper notice thereof, to the extent permitted by law, but any assignment of moneys shall be subject to all proper set-offs in favor of the City and to all deductions provided for in the Contract and particularly all money withheld, whether assigned or not, shall be subject to being used by the City for the completion of the Work in the event that the Contractor should be in default therein.

6-1.03 **BEGINNING OF WORK.** After the execution of the Contract by both

FOR COUNCIL APPROVAL ONLY

parties, the City will issue the Notice to Proceed upon its determination that it is appropriate for the Contract Time to commence.

The Contractor shall begin Work within fifteen (15) Days after receiving the Notice to Proceed from the Director, subject to the requirements stated elsewhere in the Contract Documents regarding, among other things, the submittal of Baseline Schedule, and shall diligently prosecute the same to completion within the time limit provided in the Supplemental Conditions. Contractor shall also achieve any and all Contract milestones as described elsewhere in the Contract Documents.

The Contractor shall notify the Director, in writing, of its intent to begin Work at least seventy-two (72) hours before Work is begun. The notice shall be delivered to the Director and shall specify the date the Contractor intends to start. If the project has more than one (1) location of Work, a separate notice shall be given for each location.

The Contractor is not authorized to perform any Work until it has received a Notice to Proceed from the City. Should the Contractor begin Work in advance of receiving notice that the Contract has been approved as above provided, any Work performed by it in advance of the said date of approval shall be considered as having been done by the Contractor at its own risk and as a volunteer unless said Contract is so approved thereafter.

FOR COUNCIL APPROVAL ONLY

6-1.04 **PROGRESS SCHEDULE.**

A. Preliminary Progress Schedule. The Contractor shall submit to the Director, within twenty (20) Days after date of the Notice to Proceed, a Preliminary Progress Schedule covering the Contractor's activities over the first three (3) months of operation in detail and the remainder of the project in summary. The Preliminary Progress Schedule shall schedule the project within the Contract Time for completion of the Work, and shall be subject to

favorable review by the Director.

B. CPM Schedule. The Contractor shall submit an acceptable Critical Path Method (CPM) Schedule to the Director within thirty (30) Days after the receipt of the Notice to Proceed. Subsequent revisions to said schedule shall be submitted as set forth hereinafter. The requirement for the CPM schedule is included to allow for adequate planning and execution of the Work, to determine the critical nature of delays, and to assist the Director in appraising the reasonableness of the proposed schedule and evaluating progress of the Work. The CPM schedule submitted under this Section shall utilize a CPM format, either the precedence or arrow diagramming method. The definitions of CPM terms and functions shall be as provided in the Associated General Contractors of America book *CPM in Construction, A Manual for General Contractors*, or a favorably reviewed alternative publication or reference. No progress payment will be made prior to submission and acceptance of the CPM Schedule.

1. The CPM schedule system shall consist of diagrams and accompanying mathematical analyses. The diagrams shall show elements of the project in detail and an entire project summary. Diagrams shall show the order and interdependence of activities and sequence in which the Work is to be accomplished as planned by the Contractor. The basic concept of a network analysis diagram shall be followed to show how the start of a given activity is dependent on the completion of preceding activities and its completion restricts the start of following activities. Detailed network activities shall include, in addition to construction activities, the submittal and favorable review of samples of material and Shop Drawings, the procurement of critical materials and equipment, fabrication of special material and equipment, and their Installation and testing. All activities of the City and the Director that affect progress and required Contract dates for completion of all or parts of the Work shall be shown. The

FOR COUNCIL APPROVAL ONLY

selection and number of activities shall be subject to favorable review by the Director. Summary networks shall be time scaled. Durations shall be in Days and shall not exceed fifteen (15) Days, except for submittal and delivery items. Where the duration of continuous Work exceeds fifteen (15) Days, Work items in the Construction Schedule shall be subdivided by location, approximate stationing or other sub-element of the Work.

The graphic network diagram shall include for each activity, the description, activity number, the estimated duration in Days, and all activity relationship lines. The network diagram shall be drawn for the early start of activities. All significant Submittals shall be scheduled along with manual Submittals and training on all large or critical pieces of equipment. If the precedence technique is utilized, the schedule project shall include a calendar in Work Days, a network report sorted by early start and a logic table report sorted by preceding Work item. If the arrow technique is utilized, the schedule report shall include a calendar in Work Days, a network report sorted by early start, a network report sorted by I-J numbers, and a network sorted by slack time and I-J numbers.

2. The critical path shall be shown on all reports and on the graphic network diagram. The activities which constitute the critical path shall be identified.

3. The mathematical analysis of the network diagram shall include a tabulation of each activity. The following information shall be furnished as a minimum for each activity:

(a) preceding and following event numbers

(b) activity description and number

(c) estimated duration of activities

(d) earliest start date (by calendar date)

FOR COUNCIL APPROVAL ONLY

(e) earliest finish date (by calendar date)

(f) actual start date (by calendar date)

(g) actual finish date (by calendar date)

(h) latest start date (by calendar date)

(i) latest finish date (by calendar date)

(j) slack or float

(k) percentage of activity completed

4. The program shall be capable of accepting revised completion dates as modified by approved time adjustments and recomputations of all tabulation dates and float accordingly.

5. Submission and review of the system shall be as follows:

(a) The complete network analysis system, consisting of the detailed network mathematical analysis and network diagrams, shall be submitted within thirty (30) Days after receipt of the Notice to Proceed.

(b) The Contractor shall participate in a review and evaluation of the proposed network diagrams and analysis by the Director. Any revisions necessary as a result of this review shall be resubmitted for review by the Director within ten (10) Days. When completed, the favorably reviewed schedule shall then be the schedule to be used by the Contractor for planning, organizing and directing the Work and for reporting progress. If the Contractor thereafter desires to make significant changes in its method of operating and scheduling, the Contractor shall notify the Director in writing stating the reasons for the change.

(c) The Contractor shall submit at monthly intervals a report of the actual construction progress. Each monthly report shall cover a period of approximately thirty

FOR COUNCIL APPROVAL ONLY

(30) Days ending around the 20th of each month. The monthly reports shall be submitted within ten (10) Days of the end of the reporting period.

(1) If the project is proceeding on schedule, the monthly update report may consist of a marked-up copy of the graphical network diagram. This submittal shall clearly indicate the status of any minor shifts in sequence or schedule and the estimated completion date or percent complete of all activities currently in progress. The Contract completion date shall also be indicated. The Contractor shall submit a narrative report relating to status of construction, the schedule, and factors which may affect the remainder of the schedule. The report shall show the activities or portions of activities completed during the reporting period. The report shall state the percentage of the Work actually completed and scheduled as of the report date and the progress along the critical path in terms of Days ahead or behind the allowable dates.

(2) If, in the opinion of the Director, the project is behind schedule, the monthly report shall include a revised network diagram and/or mathematical analysis showing the Contractor's proposed revised schedule. An analysis of the effect that the delay has on progress along other paths shall also be included in the report. The Contractor shall also submit a narrative report with each updated analysis which shall include but not to be limited to a description of current and anticipated problem areas, delaying factors and their impact, and an explanation of corrective actions taken or proposed.

(3) Periodic report shall be submitted in sufficient copies to cover Contractor needs plus five (5) copies and an available electronic copy to be retained by the Director.

FOR COUNCIL APPROVAL ONLY

6. To the extent that the favorably reviewed initial Construction Schedule, or revisions thereto, indicate anything not jointly agreed upon, it shall be deemed to be not favorably reviewed by the Director. Any omission of Work from the detailed schedule, otherwise required for Contract compliance, will not excuse the Contractor from completing such Work within any applicable completion date. The CPM schedule shall be generated by computer methods.

C. Schedule Review. Once each month, on a date mutually agreed upon, but no later than seven (7) business days after the monthly schedule progress report date, a Work Site meeting will be held to review the Construction Schedule and job progress. The Contractor shall also attend weekly meetings scheduled by the Director to review the progress of the Work in the preceding week and in the subsequent week, coordinate the Work with public agencies or other Contractors as required, and allow the Director to plan his or her activities for testing, inspection, etc.

D. Schedule Revisions. The conditions under which the Director will require revisions of the Construction Schedule include the following:

1. When delay in completion of any Work item or sequence of Work items results in an estimated extension of project completion by either twenty (20) business days or by ten percent (10%) of the remaining duration of time to complete the Contract, whichever is less.

2. When delays in Submittals or deliveries make replanning or rescheduling of the Work necessary.

3. When the schedule does not represent actual prosecution and progress of the Work.

FOR COUNCIL APPROVAL ONLY

4. When any change to the sequence of activities, the completion date for major portions of the Work, or when changes occur which affect the critical path.

5. When Contract Amendments or a Change Order necessitates schedule revision, the Contractor shall submit a schedule analysis of all Change Order Work with its proposal.

E. Cash Flow Projection. A cash flow projection shall be submitted with the Construction Schedule. This cash flow projection shall be revised and resubmitted when revisions of the Construction Schedule will result in changes to the projected cash flow.

F. Schedules showing project completion dates earlier than specified in the Supplemental Conditions will be rejected unless justification can be provided for early completion.

6-1.05 **SCHEDULE OF VALUES.** Prior to preparation of the first estimate for a progress payment, the Contractor shall submit for favorable review by the Director a detailed Schedule of Values or cost breakdown of the Work under each bid item awarded. The breakdown will then become the basis for partial payment determination. Elements of Work shall be grouped by structure, pipeline, system, etc. Within each grouping, Work should be itemized by readily measurable quantities of Work complete in place. For example, concrete should be in units of cubic yards including form Work and reinforcing steel. Move-on costs, bond and insurance costs, and Overhead costs shall not be considered an item of cost for this purpose but shall be prorated over items of Work. In the event the Schedule of Values is not favorable reviewed by the Director, another Schedule of Values shall be submitted that is mutually acceptable to the Contractor and the Director.

6-1.06 **CITY'S RIGHT TO STOP WORK.** The Director shall have the

FOR COUNCIL APPROVAL ONLY

authority to order the Contractor, in writing, to suspend the Work wholly or in part, for such period as the Director may deem necessary due to the failure on the part of the Contractor to correct Work that is not in accordance with the requirements of the Contract Documents or if Contractor persistently fails to carry out Work in accordance with the Contract Documents.

The Contractor shall immediately comply with the written order of the Director to suspend the Work wholly or in part. The suspended Work shall be resumed when conditions are favorable and methods are corrected, as ordered or approved in writing by the Director.

Any stoppage of work under this section shall be at the Contractor's sole expense, and the Contractor shall have no claim against the City based on the Contractor's failure to perform the Work in accordance with the Contract Documents.

In addition to the City's right to stop Work, the City may order the Contractor to submit to the City at no additional cost to the City, additional information concerning Contractor's planned Work if the Contractor fails to promptly correct Work that is not in accordance with the requirements of the Contract Documents or persistently fails to carry out Work in accordance with the Contract Documents. The additional information ordered by the City may include, but is not limited to, preparation of Submittals or Working Drawings not otherwise required to be submitted under the Contract Documents.

In the event the City discovers that the Contractor has created an unsafe condition the City may arrange for other work forces to remedy the condition. Such remedial work shall be at the sole discretion of the City. If this action is required, the City may unilaterally terminate Work under the Contract, and will pay only for the quantities of Work actually performed, less the cost of the City's remedial Work. In the event that Work is not halted, the Contractor must take immediate steps to correct the situation. There will be no extra payment for Work required

FOR COUNCIL APPROVAL ONLY

to correct unsafe conditions.

The right of the City to suspend the Work shall not give rise to a duty on the part of the City to exercise this right for the benefit of the Contractor or any other person or entity. This right shall be in addition to and not in restriction or derogation of the City's other rights under the Contract Documents.

In the event of a suspension of Work under any of the conditions set forth in this Section 6-1.06, such suspension of Work shall not relieve the Contractor of its legal responsibilities as set forth in these General Conditions.

6-1.07 **TIME OF COMPLETION.** The Contractor shall complete the entire Work, including Installation, repairs, startup, troubleshooting, painting, and touchup, training, submittal or record drawings, and manuals, cleanup, demobilization, and all other Work within the number of Days set forth in the Supplemental Conditions. The time for completion includes an allowance for working time lost due to normal inclement weather.

Extensions of time may be allowed for unusual inclement weather under the provisions hereinafter described. Unusual inclement weather is weather which adversely affects "controlling" operations or the critical path of construction and which meets one of the following criteria:

A. For the particular calendar month in question, the number of individual Days with rainfall exceeding 0.10 inches exceeds the average number of such Days for that month over the immediately preceding five (5) years of record by at least three (3) Days.

B. For the particular calendar month in question, the total cumulative rainfall for that month exceeds the average cumulative rainfall for that month over the immediately preceding five (5) years of record by at least two inches (2").

FOR COUNCIL APPROVAL ONLY

Rainfall shall be measured at a publicly operated, maintained, and reported station in reasonable proximity to the construction site. A claim for delay shall indicate the period of rainfall which is claimed as "unusual," the specific dates during which the unusual rainfall and subsequent wet soil conditions prevented Work, and the specific critical path tasks adversely affected by such unusual weather. A claim for delay due to unusual inclement weather shall be filed within ten (10) Days of the apparent end of the unusual inclement rainfall period, whether or not the monthly totals are available at that time. The burden of proof that weather meets the criteria for unusual weather shall be solely the responsibility of the Contractor.

It is the responsibility of the Contractor to order materials required for the Work properly and promptly on a Notice to Proceed. If evidence presented demonstrates that, in spite of the Contractor's efforts, government-established priorities controls delay material deliveries, suitable extension of time will be made.

If performance of extra Work ordered by the City or failure of the City to provide the necessary site for Installation affects construction tasks which are "controlling" or which are on the "critical path" of the Construction Schedule, suitable extensions of time will be made.

The Contractor shall not be entitled to a time extension for delays in activities on non-critical paths of the favorably reviewed schedule unless the duration of the excusable delay exceeds the total float of the activities being delayed. If the duration of an excusable delay does exceed the total float of the activities affected by the delay, the Contractor shall be entitled to an extension equal to the difference.

C. Determination that a day is a non-working day by reason of inclement weather or conditions resulting immediately therefrom, shall be made by the Director.

6-1.08 **LIQUIDATED DAMAGES.** It is agreed by the parties to the Contract

FOR COUNCIL APPROVAL ONLY

that in case all the Work called for under the Contract in all parts and requirements is not completed within the number of Days as set forth in the Supplemental Conditions, damage will be sustained by the City and that it is and will be impracticable and extremely difficult to ascertain and determine the actual damage which the City will sustain in the event of and by reason of such delay; and it is therefore agreed that the Contractor will pay to the City, the monetary amount indicated in the Supplemental Conditions in dollars (U.S.) per day for each and every calendar day of delay in completing the Work in excess of the number of Days prescribed and the number of additional calendar days, if any, authorized by Contract Change Order; and the Contractor agrees to pay said Liquidated Damages herein provided for, and further agrees that the City may deduct the amount thereof from any moneys due or that may become due the Contractor under the Contract.

It is further agreed that in case the Work is not finished and completed in all parts and requirements within the number of Days specified, the City shall have the right to increase the number of Days or not, as it may deem best to serve the interest of the City, and if it decides to increase the said number of Days, it shall further have the right to charge to the Contractor, its heirs, assigns or sureties and to deduct from the final payment for the Work all of any part, as it may deem proper, of the actual cost of engineering, inspection, superintendence, and other Overhead expenses which are directly chargeable to the Contract, and which accrue during the period of such extension, except that cost of preparation of final statement shall not be included in such charges.

6-1.09 **DELAYS AND EXTENSIONS TO THE WORK.** The Contractor must complete all Work within the time specified in the Agreement. The Contractor will be granted an extension of time and will not be assessed with liquidated damages or the cost of engineering

FOR COUNCIL APPROVAL ONLY

and inspection for any delay in substantially completing the Work (or parts thereof) beyond the time set forth in the Agreement, provided that such delay was caused by unforeseeable causes beyond the control and without the fault or negligence of the Contractor. Examples of such causes include acts of public enemy, fire, floods, abnormal weather (as described below), earthquakes, epidemics, quarantine restrictions, strikes, labor disputes and freight embargoes, fire, changes made pursuant to the provisions of "Changes in the Work" under Section 3 of these General Conditions or acts or neglect of the City not contemplated by the Contract Documents. In all cases, any extension of time is conditioned on the following:

1. That the cause is not due to the fault or negligence of the Contractor, and the Contractor has taken reasonable precautions to prevent and minimize the effects thereof; and

2. That the Contractor notifies the Director in writing within three (3) Days from the beginning of such delay specifying the nature of the delay and the measures that have been or will be taken to prevent or minimize the delay. Failure to submit written notice within this time period shall constitute an absolute waiver of any claim for a time extension.

No extension of time will be granted for a delay caused by a shortage of materials, unless the Contractor furnishes to the City documentary proof that it has diligently made every effort to obtain such materials from all known sources within reasonable reach of the work and further proof, as acceptable to the Director, that the inability to obtain such materials when originally planned did in fact cause a delay in Final Completion of the entire Work which could not be compensated for by revising the sequence of the Contractor's operations. Only the physical shortage of material will be considered as a cause for extension of time, and no consideration

FOR COUNCIL APPROVAL ONLY

will be given to any claim that material could not be obtained at a reasonable, practical or economical cost or price, unless it is shown to the satisfaction of the City that such material could have been obtained only at exorbitant prices entirely out of line with current rates, taking into account the quantities involved and the usual practices in obtaining such quantities.

No extension of time will be granted for a delay caused by Contractor's staff turnovers, understaffing or insufficient quantity of qualified staff able to perform the necessary work.

The term "shortage of materials," as used in this section, shall apply only to materials, articles, parts or equipment which are standard items and shall not apply to materials, parts, articles or equipment which are processed, made, constructed, fabricated or manufactured to meet the specific requirements of the Contract Documents.

No extensions of time will be granted for delays that have no measureable impact on the completion of the Work (or parts thereof) under the Contract Documents. When extensions of time are granted, they will be limited to the period equivalent to the actual number of Days lost on the critical path or controlling operations of the Construction Schedule, taking into account the extent to which that delay could be decreased by reasonable mitigation measures by the Contractor. All requests for extensions of time must be supported with a critical path analysis showing the critical path and impacts to it. Contractor's failure to submit this analysis will be sufficient cause for denial of any request for a time extension.

Within a reasonable period of time after the Contractor submits the notice and information required by this section, the City will determine whether an extension of time is justified and, if so, the number of days for the extension.

Abnormal weather may be a valid basis for a time extension under the Agreement. "Abnormal Weather" occurs when the number of days of rain above 0.5 inches in a 24 hour

FOR COUNCIL APPROVAL ONLY

period exceeds the average for such rainfall in a particular month as determined by the National Weather Service. The Contractor will only be entitled to, at most, a time extension for the number of days of rain exceeding the average for that month in the locale where the Work is to be performed. If delays are caused by the Contractor or those for whom the Contractor is responsible, the Contractor will only be entitled to, at most, a time extension for the number of rain days exceeding the average for the month when the Work should have been performed.

In addition, before a time extension may be granted for abnormal weather, the Contractor must establish that the rain either significantly impacted at least sixty percent (60%) of the planned work of the controlling operations for a particular day or prohibited at least five (5) hours of work on the controlling operations planned for that day. Contractor shall employ reasonably methods to mitigate the impact of abnormal weather (i.e., dewatering, protection of site, etc.) The occurrence of rain during non-work hours or having minimal impact to work on the controlling operation shall not constitute a day of abnormal weather.

In the event that the project experiences favorable weather for a particular month (e.g., the number of actual rain days in a month less than that indicated above for allowable rain days per months), the additional float resulting from such favorable weather shall accrue to the project.

Any Contractor claim for damages or additional compensation based on delay shall be limited to only those circumstances where the Contractor has fulfilled each of the following three (3) requirements:

1. Contractor has established its entitlement to a time extension pursuant to the provisions described above regarding delay and extensions to the Work.
2. The delay was caused solely by the City's issuance of changes made pursuant to the

FOR COUNCIL APPROVAL ONLY

provisions of "Changes in the Work" under Section 3 of these General Conditions or by acts or neglect of the City.

3. The delay was unreasonable under the circumstances and not within the contemplation of the parties.

It is expressly understood and agreed that delays caused by the City will be non-compensable when there are concurrent delays caused by the Contractor. Also, the Contractor shall have no entitlement to additional compensation for any delay where there have been concurrent delays caused by non-compensable delays, including, but not limited to, fire, floods, earthquakes, epidemics, quarantine restrictions, strikes, labor disputes, and freight embargoes.

Contractor's damages and/or additional compensation for delays will consist solely of the extended costs of maintaining the Contractor's Work Site presence. The Contractor will not be entitled to any extended home office overhead.

Compensation for idle time of equipment will be determined in the same manner as determinations are made for equipment used in the performance of extra work paid for on a Force Account basis with the following exceptions:

1. The time for which compensation will be paid will be the actual normal working hours during which such delay conditions exists, but in no case will exceed eight (8) hours in any one day.
2. The days for which compensation will be paid will be each calendar day of the work week (defined elsewhere in the Contract Documents) and Legal Holidays, during the existence of such delay, except that when rental of the equipment is paid for under the provisions in Section 3-1.06C, "Force Account Payment – Equipment," of these General Conditions, no payment will be made for delays in accordance with the

FOR COUNCIL APPROVAL ONLY

provisions of this section.

Actual loss shall be understood to include no items of expense other than idle time of personnel, cost of extra moving of equipment, and cost of longer hauls. Compensation for idle time of equipment will be determined as provided in this section and compensation for idle time of personnel will be determined pursuant to Section 3-1.06A, "Force Account Payment – Labor," of these General Conditions. No markup will be added in either case for Overhead and profit. The cost of extra moving of equipment and the cost of longer hauls will be paid for as extra work as provided pursuant to "Changes to the Work" elsewhere in the Contract Documents.

6-1.10 **TERMINATION.**

6-1.10A **TERMINATION OF AGREEMENT – CONVENIENCE OF CITY.** The Department reserves the right to terminate the Contract at any time and for any reason if the Director determines that to do so would be in the best interest of the City. Any termination which is not based on the circumstances set forth in Section 6.1-10B below shall be effected by delivery to the Contractor of a Notice of Termination specifying the extent to which performance of Work under the Contract is terminated, and the date upon which such termination becomes effective.

Upon the Contractor's receipt of a written Notice of Termination for convenience, the Contractor shall cease Work as to those portions of the project so terminated and shall undertake the steps outlined in Section 6-1.10B below.

1. Acceptance of the Contract as hereinafter specified shall not relieve the Contractor of responsibility for damage to materials except as follows:

a. The Contractor's responsibility for damage to materials for which partial payment has been made as provided in Section 7-1.07, "Progress

FOR COUNCIL APPROVAL ONLY

Payments," of these General Conditions and for materials furnished by the City for use in the Work and unused shall terminate when the Director certifies that such materials have been stored in the manner and at the locations he or she has directed.

b. The Contractor's responsibility for damage to materials purchased by the City subsequent to the issuance of the notice that the Contract is to be terminated shall terminate when title and delivery of such materials has been taken by the City.

c. When the Director determines that the Contractor has completed the Work under the Contract directed to be completed prior to termination and such other Work as may have been ordered to secure the project for termination, the Contractor will recommend that the City formally accept the Work, and immediately upon and after such Acceptance by the City, the Contractor will not be required to perform any further Work thereon and shall be relieved of its contractual responsibilities for injury to persons or damage to property which occurs after the formal Acceptance of the project by the City.

2. The total compensation to be paid to the Contractor shall be determined by the Director on the basis of the following:

a. The reasonable cost to the Contractor, without profit, for all Work performed under the Contract, including mobilization, demobilization and Work done to secure the project for termination. Reasonable cost will include a reasonable allowance for project Overhead and general

FOR COUNCIL APPROVAL ONLY

administrative Overhead not to exceed a total of seven percent (7%) of Direct Costs of such Work.

b. A reasonable allowance for profit on the cost of the Work performed as determined under subsection (a), provided the Contractor establishes to the satisfaction of the Director that it is reasonably probable that it would have made a profit had the Contract be completed and provided further, that the profit allowed shall in no event exceed four percent (4%) of said cost.

c. The reasonable cost to the Contractor of handling material returned to the vendor, delivered to the Department or otherwise disposed of as directed by the Director.

d. A reasonable allowance for the Contractor's administrative costs in determining the amount payable due to termination of the Contract.

All records of the Contractor and the Contractor's Subcontractors, necessary to determine compensation in accordance with this Section, shall be open to inspection or audit by representatives of the Department at all times after issuance of the notice that the Contract is to be terminated and for a period of three (3) years, and such records shall be retained for that period.

After Acceptance of the Work by the Director, the Director may make payments on the basis of interim estimates pending issuance of the Final Statement, when in his or her opinion the amount thus paid, together with all amounts previously paid or allowed, will not result in total compensation in excess of that to which the Contractor will be entitled. All payments, including payment upon the Final Statement, shall be subject to deduction for prior payments and amounts, if any, to be kept or retained under the provisions of the Contract.

FOR COUNCIL APPROVAL ONLY

In the event that the City terminates this Contract under Section 6-1.10B below and it is determined for any reason that there was not sufficient cause to do so, the City's termination automatically will convert to a termination for convenience under this section and the terms and conditions outlined in this section automatically will be applied to effectuate the Contract termination. Thus, damages to which a Contractor may be entitled as a result of an improper default termination will be limited to the amounts provided for in this section.

The provisions of this section shall be included in all subcontracts.

6-1.10B **TERMINATION OF AGREEMENT - FOR CAUSE.** An "Event of Default" as referred to in this section shall occur if the Contractor:

1. Fails to maintain progress of the Work in accordance with the requirements of the Contract Documents; or
2. Fails to prosecute the Work or any of its components in accordance with the Contract Documents; or
3. Persistently or repeatedly fails or refuses to supply sufficient properly skilled workers or proper material to permit the performance of the Work in accordance with the Contract Documents; or
4. Fails to make prompt payment to Subcontractors or Suppliers in accordance with the respective agreements between the Contractor and the Subcontractor and Contractor and Supplier; or
5. Fails to comply with applicable laws, ordinances or rules, regulations or orders of a public authority having jurisdiction over the Work; or
6. Abandons, assigns or sublets the Contract without approval of the City; or
7. Becomes bankrupt or is subject to appointment of a receiver on behalf of the

FOR COUNCIL APPROVAL ONLY

Contractor; or

8. Otherwise is guilty of a substantial breach of a provision of the Contract Documents.

Upon the City's reasonable belief that there has been an Event of Default by the Contractor, the City may elect to give the Contractor written notice thereof. The Contractor thereafter shall cure the default as soon as possible and in no event after ten (10) Days from the Contractor's receipt of the City's written notice.

If the Contractor does not timely cure its default, the City may, without waiver of any of its other rights and remedies, elect to terminate the Contract, or portion thereof.

Upon the City's election to terminate the Contract, or portion thereof, the City shall have the right to complete the Work, or portion involved, by whatever means and methods it deems expedient, including the hiring of others on such terms as the City deems advisable. The City shall have the right to take possession of the Contractor's materials, plant, tools, equipment and property of any kind provided by or on behalf of the Contractor for the purpose of the Work, or a portion of them, without being responsible to the Contractor for wear and tear. The Contractor shall have no rights in such property during its use by the City. The City shall not be required to obtain the lowest prices for completing the Work or a portion of it but shall make such expenditures as, in the City's sole judgment, best accomplish such completion.

The expense of completing such Work or portion thereof, together with a reasonable charge for engineering, managerial and administrative services, as certified by the City, shall be charged to the Contractor, and the expense so charged shall be deducted by the City out of such monies as may be due or may at any time thereafter become due to the Contractor. In case such expense is more than the sum which otherwise would have been payable to the Contractor under the Agreement, then the Contractor or its surety or sureties shall promptly pay the amount of

FOR COUNCIL APPROVAL ONLY

such excess so due. When the City terminates the Contract under this section, the Contractor shall not be entitled to receive any further payments until the Work is completed and there has been a final settlement of costs of completing the Work covered by such notice of default.

The City will issue to the Contractor a written notice specifying that the Contract, or portion thereof, is terminated. Upon receipt of said written notice and, except as otherwise directed in writing by the City, the Contractor shall:

1. Stop all Work under the Contract; or if partial termination, stop Work relating to the terminated portion of the Agreement;
2. Perform Work the City deems necessary to secure the Work Site for termination including measures to leave the Work Site in a safe condition;
3. Remove equipment from the site of Work, as specified by the City;
4. Take such action as is reasonably necessary to protect materials from damage;
5. Notify all Subcontractors and Suppliers that the Contract or portion thereof is being terminated and that their contracts or orders are not to be further performed unless otherwise authorized in writing by the City;
6. Provide the City with an inventory list of all materials previously produced, purchased or ordered from Suppliers for use in the Work and not yet used in the Work, including its storage location, and such other information as the City may request;
7. Dispose of materials not used in the Work as directed by the Director. It shall be the Contractor's responsibility to provide the City (a) with good title to all materials purchased by the City hereunder, including materials for which partial payment has been made by the City and (b) with bills of sale or other documents of title for such

FOR COUNCIL APPROVAL ONLY

materials;

8. Subject to the prior written approval of the City, settle all outstanding liabilities and all claims arising out of Subcontractors or orders for materials terminated hereunder. To the extent directed by the City, the Contractor shall assign to the City all rights, title and interests of the Contractor under subcontracts or orders for materials terminated hereunder. The City shall be at liberty to negotiate with and engage any Subcontractors who had contracted with the Contractor for the Work;
9. Furnish the City with the documentation required to be furnished by the Contractor under the provisions of the Contract Documents, including, on projects as to which Federal funds are involved, all documentation required under the Federal requirements included in the Agreement; and
10. Take such other actions as the City may direct.

If only a portion of the Work has been terminated, the Contractor shall perform the remainder of the Work in conformity with the Contract Documents and in such a manner as not to interfere with the City or others in their performance and completion of the portion of the Work which was terminated.

The City may recover from the Contractor the amount of any loss or damage, including consequential damages, suffered or incurred as a result of the Contractor's default.

FOR COUNCIL APPROVAL ONLY

SECTION 7

ACCEPTANCE AND PAYMENT

7-1.01 **ACCEPTANCE.** When the Contractor believes that the entire Work is fully and finally completed, including the satisfactory completion of inspections, tests, and documentation specified in the Contract Documents and completion of all punch list and clean-up items, the Contractor shall submit to the City a written request for final Acceptance within fifteen (15) Days thereafter, specifying that the Work is fully and finally completed and the date on which it was completed. Within thirty (30) Days after receipt of the request for final Acceptance, the City will inspect the Work and will either:

1. Reject the request for final Acceptance, specifying the defective and/or uncompleted portions of the Work; or
2. Notify the Contractor that the Work will be accepted by Resolution of the City Council of the City of Roseville, and a Notice of Completion will be caused to be recorded by the City Clerk; or
3. Notify the Contractor that the Work has been accepted by the City but no Notice of Completion will be recorded.

If the City rejects the request for final Acceptance, the Contractor shall promptly remedy the defective and/or uncompleted portions of the Work. Thereafter, the Contractor shall again submit a written request for final Acceptance of the Work, specifying a new date based on the date the defective and/or uncompleted portions of the Work were corrected. Thereafter, the foregoing procedure shall apply successively until the City has verified that the Work is fully and finally completed and accepted the Work by Resolution of the City Council or by written

FOR COUNCIL APPROVAL ONLY

notification from the Director. Immediately upon such Acceptance, the Contractor shall be relieved of the duty of maintaining the Work as a whole.

All warranties commence upon final Acceptance of the Work. The City's final Acceptance of the Work shall not be construed as an acceptance by the City of any latent defects discovered with regard to the Contractor's work. Furthermore, Contractor's obligations under Section 5-1.22 "Responsibility for Damage and Indemnification" shall still remain applicable after the City's grant of final Acceptance of the Work.

Prior to final Acceptance, the Contractor shall submit to the City the Record Documents and Operation and Maintenance Manuals as specified in the Contract Documents.

7-1.02 **SCOPE OF PAYMENT.** The Contractor shall accept the compensation provided in the Contract as full payment for furnishing all labor, materials, tools, equipment, and incidentals necessary to the completed Work and for performing all Work contemplated and embraced under the Contract; also for loss or damage arising from the nature of the Work, or from the action of the elements, or from any unforeseen difficulties which may be encountered during the prosecution of the Work until the Acceptance by the Director and for all risks of every description connected with the prosecution of the Work, also for all expenses incurred in consequence of the suspension or discontinuance of the Work as provided in the Contract; and for completing the Work according to the Contract. Neither the payment of any estimate nor of any retained percentage shall relieve the Contractor of any obligation to make good any defective Work or material.

No compensation will be made in any case for loss of anticipated profits.

7-1.03 **NOTICE OF POTENTIAL CLAIM.** The Contractor shall not be entitled to the payment of any additional compensation for any act or failure to act by the City,

FOR COUNCIL APPROVAL ONLY

including failure or refusal to issue a Change Order, or for the happening of any event, thing, occurrence or other cause unless the Contractor has given the City due written Notice of Potential Claim as hereinafter specified, provided, however, that compliance with this Section 7-1.03 shall not be a prerequisite as to matters within the scope of the notice provisions in Section 6-1.07, "Time of Completion," or the notice provisions in Section 6-1.08, "Liquidated Damages," of these General Conditions, nor to any claim which is based on differences in measurement or errors of computation as to correct quantities.

The written Notice of Potential Claim shall set forth the reasons for which the Contractor believes additional compensation will or may be due, the nature of the costs involved, and, insofar as possible, the amount of the potential claim. The said Notice as above required must have been given to the Director prior to the time that the Contractor shall have performed the Work giving rise to the potential claim for additional compensation, if based on an act or failure to act by the Director, or in all other cases within seven (7) Days after the happening of the event, thing, occurrence or other cause giving rise to the potential claim.

If the Notice of Potential Claim does not include complete information about the claim or the parties do not execute a Contract Change Order in connection with the Notice of Potential Claim, Contractor shall submit complete information about its claim for additional compensation and/or extension of time for performance within fifteen (15) Days after such work is performed. Failure to provide written notice of claim prior to undertaking such work or failure to timely submit a complete and specific information about the claim for additional compensation and/or extension of the time for performance shall be deemed a waiver and abandonment of such claim.

If there is a dispute over any claim, the Contractor shall continue to Work during the dispute resolution process in a diligent and timely manner as directed by the City, and shall be

FOR COUNCIL APPROVAL ONLY

governed by all applicable provision of the Agreement.

The Contractor shall maintain cost records of all Work that is the basis of any dispute. On a daily basis, Contractor shall submit to City completed daily forms, the format of which will be acceptable to the City, with respect to the Contractor's costs of performing the disputed work. These daily forms shall itemize all of Contractor's costs in performing the disputed work, including, but not limited to, all costs relating to materials, labor and equipment with respect to the disputed work. These daily forms shall provide names or identification and classification of affected workers, the hourly rate of pay and hours worked, and also the size, type, and identification number of equipment and hours operated. Said daily work forms shall be duly signed and verified by the Contractor or its authorized representative. The City's receipt of the Contractors' daily forms shall not constitute an approval of the Contractor's claim. Contractor's failure to submit the daily forms on a daily basis shall constitute a waiver of the Contractor's right to claim any additional compensation for the disputed work.

Each Contractor claim shall include full and complete information concerning the Claim. Contractor shall provide a clear, concise recital of the basis, upon which the claim is asserted, including a designation of the provisions of the Contract Documents upon which the claim is based. Contractor shall also include a statement as to the amount of time and/or compensation sought pursuant to the claim; if Contractor's claim arises from an ongoing occurrence, Contractor shall so state in its claim, including a description of the specific Work activities affected by the claim. All costs, expenses or damages and extensions of time claimed shall be described in reasonable detail under the circumstances together with complete supporting documentation.

The City will review any timely Notice of Potential Claim and supporting information

FOR COUNCIL APPROVAL ONLY

submitted by Contractor. In conducting this review, the City shall have the right to require the Contractor to submit such additional or supporting documents, data and other information as the City may require.

If an agreement can be reached which resolves the Contractor's claim, the parties will execute a Contract Change Order to document the resolution of the claim. If the parties cannot reach agreement with respect to the Contractor's claim, the Contractor shall still be obligated to comply with the claim identification provisions identified in these General Conditions, including but not limited to Section 7-1.04.

It is the intention of this Section 7-1.03 that differences between the parties arising under and by virtue of the Contract be brought to the attention of the Director at the earliest possible time in order that such matters may be settled, if possible, or other appropriate action promptly taken. The Contractor hereby agrees that it shall have no right to additional compensation for any Claim that may be based on any such act, failure to act, event, thing or occurrence for which no timely written Notice of Potential Claim as herein required was filed.

7-1.04 **CLAIMS.** Contractor must submit all Claims, for which it has previously submitted a Notice of Potential Claim, prior to Acceptance of the Work. Each such Claim must be sent to the City by registered mail or certified mail with return receipt requested and must contain reasonable documentation to support the Claim.

Upon receipt of a Claim, the City shall conduct a reasonable review of the Claim and, within a period not to exceed forty-five (45) Days, or such further time as mutually agreed upon or necessary pursuant to Public Contract Code Section 9204, the City shall provide the Contractor a written statement identifying what portion of the Claim is disputed and what portion is undisputed. If the City does not respond to a Claim from the Contractor within the time

FOR COUNCIL APPROVAL ONLY

specified herein, such Claim shall be deemed rejected in its entirety.

Any payment due on an undisputed portion of the Claim shall be processed and made within sixty (60) Days after the City issues its written statement.

If the Contractor disputes the City's written response, or if the City does not respond within the time specified herein, the Contractor may demand in writing an informal conference to meet and confer for settlement of the issues in dispute. Upon receipt of a demand in writing sent by registered mail or certified mail, return receipt requested, the City shall schedule a meet and confer conference within thirty (30) Days for settlement of the dispute.

Within ten (10) business days following the conclusion of the meet and confer conference, if the claim or any portion of the claim remains in dispute, the City shall provide the Contractor a written statement identifying the portion of the Claim that remains in dispute and the portion that is undisputed. Any payment due on an undisputed portion of the Claim shall be processed and made within sixty (60) Days after the City issues its written statement. Any disputed portion of the Claim, as identified by the Contractor in writing, shall be submitted to nonbinding mediation, with the City and the Contractor sharing the associated costs equally. The City and the Contractor shall mutually agree to a mediator within ten (10) business days after the disputed portion of the Claim has been identified in writing. If the parties cannot agree upon a mediator, each party shall select a mediator and those mediators shall select a qualified neutral third party to mediate with regard to the disputed portion of the Claim. Each party shall bear the fees and costs charged by its respective mediator in connection with the selection of the neutral mediator. If mediation is unsuccessful, the parts of the Claim remaining in dispute shall be resolved in accordance with Section 7-1.05 below.

7-1.05 **DISPUTE RESOLUTION PROCEDURE.** All Claims not resolved

FOR COUNCIL APPROVAL ONLY

pursuant to Section 7-1.04, shall be resolved pursuant to Public Contract Code Section 10240, et seq.

7-1.06 **STOP PAYMENT NOTICES.** The City, by and through the Department or other appropriate office or officers, may at its option and at any time retain out of any amounts due the Contractor, sums sufficient to cover claims, filed pursuant to Civil Code Section 9350, et seq., including an amount to provide for the reasonable cost of any litigation thereunder.

7-1.07 **PROGRESS PAYMENTS.** Within fifteen (15) Days after the effective date in the Notice to Proceed, but in any event prior to Contractor's first Application for Payment, the Contractor shall submit to the City a detailed Schedule of Values.

Upon its approval, the Schedule of Values will form a basis for determining the compensation payable to the Contractor based on its actual progress of Work with respect to each Lump Sum bid item. The City, prior to any progress payment being made, must approve the Schedule of Values.

At the Director's discretion the approved Schedule of Values may be used as the basis for calculating the adjustment in compensation for a lump sum bid item due to changes ordered by the Director. When an ordered change increases or decreases the quantities shown in an approved Schedule of Values, at the Director's discretion, the adjustment in compensation may be determined in the same manner specified for increases and decreases in the quantity of a bid item of work in accordance with Section 3-1.05(B), "Contract Price Adjustment," of these General Conditions.

The Contractor once in each month shall submit an Application for Payment, for approval by the Director. Contractor's Applications shall be based on the Schedule of Values submitted to the City. These applications shall be supported by: (1) documentation requested by the City to

FOR COUNCIL APPROVAL ONLY

substantiate the payment request; (2) statutory releases from Contractor and all Subcontractors and suppliers pursuant to Civil Code Sections 8132 and 8138; and (3) certified payroll records for the period for which payment is requested. Specifically, the Contractor will submit conditional waivers upon progress payment executed by all contractors and suppliers that will be receiving sums sought in the instant payment request and also submit unconditional waivers upon progress payment executed by all contractors and suppliers that have been paid to the date of the payment request. The Contractor shall certify that the Work for which payment is requested has been accomplished. When requested by the City, the Contractor shall submit receipts, invoices and other documentation that the City requires to be furnished for purpose of evaluating the application.

The City will pay the Contractor within thirty (30) Days after its receipt of an undisputed and properly submitted Application for Payment, after deducting all previous payments, retention, and other sums as described in the Contract Documents. Within seven (7) Days of its receipt of the Contractor's Application for Payment, the City will determine whether it complies with the provisions of the Contract Documents. As appropriate, the City will return the application to the Contractor accompanied by a document prepared by the City setting forth the reasons for the rejection. Thereafter, the Contractor shall correct and resubmit the Application for Payment. Progress payments may be withheld for Work that is not performed in accordance with the Contract Documents.

The City may deduct the following from each progress payment:

1. An amount equal to one hundred and twenty-five percent (125%) of the amount claimed under any stop payment notice or other lien filed against the Contractor, which includes an amount to provide for the reasonable cost of any litigation

FOR COUNCIL APPROVAL ONLY

thereunder.

2. Any Liquidated Damages or Assessments that have accrued as of the date of the Application for Payment.
3. Any sums expended by the City in performing any of the Contractor's obligations under the Agreement that the Contractor has failed to perform.
4. Any other sums that the City is entitled to recover from the Contractor under the terms of the Contract including damages to the City's property.
5. The failure of the City to deduct any of the above identified sums from a progress payment shall not constitute a waiver of the City's right to such sums.

No such estimate or payment shall be construed to be an acceptance of any defective Work or improper materials.

Under no circumstances will the City make payment to unlicensed Contractors. As a condition of payment, the Contractor is required to maintain the applicable Contractor's license as identified in the Notice to Contractors for the duration of the Work.

7-1.08 **PAYMENT FOR MATERIALS AND EQUIPMENT ON HAND.**

Partial payments may be made to the extent of seventy-five percent (75%) of the cost of materials and equipment plus delivery to be incorporated in the Work, provided that such materials and equipment meet the requirements of the Contract Documents and are delivered to acceptable sites on the plant site or at other sites in the vicinity that are acceptable to the City and only with the prior written approval by the City. Such delivered costs of stored or stockpiled materials and equipment may be included in the next progress payment after the following conditions are met:

A. Equipment and materials will only be eligible if given conditional or final

FOR COUNCIL APPROVAL ONLY

Acceptance by the Director and are in apparent compliance with favorably reviewed Submittals.

B. Only equipment or materials which have received favorable review of Shop Drawings will qualify.

C. The material or equipment has been stored or stockpiled adequately protected against damage in a manner acceptable to the Director at an approved site.

D. The Contractor has furnished the Director with acceptable evidence of the quantity and the quality of such stored or stockpiled materials or equipment with identification of where they will be incorporated into the project with Specification reference.

E. The Contractor has furnished the Director with satisfactory evidence that the material or equipment and transportation costs have been paid.

F. The Contractor has furnished the City legal title (free of liens or encumbrances of any kind) and lien releases to the material or equipment so stored or stockpiled.

G. The Contractor has furnished the City evidence that the material or equipment so stored or stockpiled is insured against loss by damage to or disappearance of such materials at any time prior to use in the Work.

It is understood and agreed that the transfer of title and the City payment for such stored or stockpiled materials or equipment shall in no way relieve the Contractor of its responsibility for furnishing and placing such materials or equipment in accordance with the requirements of the Contract Documents.

In no case will the amount of progress payments for materials or equipment on hand exceed the Contract Price for such materials or equipment or the Contract Price for the Contract item in which the material is intended to be used.

No partial payment will be made for stored or stockpiled living or perishable plant

FOR COUNCIL APPROVAL ONLY

materials.

The Contractor shall bear all costs associated with the progress payment of stored or stockpiled materials or equipment in accordance with the provisions of this Section.

7-1.09 **RETENTION ON PROGRESS PAYMENTS.** From each progress payment estimate, five percent (5%) will be deducted and held in retention by the City. The remainder, less any deductions described in Section 7-1.07, "Progress Payments," of these General Conditions, will be paid to the Contractor as progress payments.

Pursuant to Public Contract Code Section 22300, the successful Bidder may submit Securities in lieu of retention payments by the City. Upon the Contractor's request, the City will make payment of funds withheld from progress payments, pursuant to the requirements of California Public Contract Code Section 22300, if the Contractor deposits in escrow with the City or with a bank acceptable to the City, securities eligible for investment under California Government Code Section 16430, bank or savings and loan certificates of deposit, interest bearing demand deposit accounts, standby letters of credit, or any other security mutually agreed to by the Contractor and the City, upon the following conditions:

1. The Contractor shall bear the expenses of the City and the escrow agent in connection with the escrow deposit made.

2. Securities or certificates of deposit to be placed in escrow shall be of a value at least equivalent to the amounts of retention to be paid to the Contractor pursuant to this section.

3. Contractor shall enter into an escrow agreement satisfactory to the City, which agreement shall be substantially similar to the form provided in California Public Contract Code section 22300.

FOR COUNCIL APPROVAL ONLY

4. The Contractor shall obtain the written consent of the surety to such agreement.

7-1.10 **FINAL PAYMENT.** Final payment will be made only after Contractor has achieved Final Completion of the Work pursuant to the provisions of Section 7-1.01, "Acceptance," of these General Conditions. Before final payment can be made, the Contractor shall have furnished the City with the following:

1. All Record Documents, catalogues, instruction sheets and information as required by the Contract Documents.

2. Conditional Waivers and Releases Upon Final Payment executed by Contractor and all Subcontractors and Suppliers, as provided by Civil Code Section 8136. Unconditional Waivers and Releases Upon Final Payment, as provided in Civil Code Section 8138, executed by Contractor and all Subcontractors and Suppliers, must be provided for all Subcontractors and Suppliers that have been paid in full.

Within thirty (30) Days of the date of the City's Acceptance of the Work, the Contractor shall prepare and submit a Final Invoice, showing the proposed total amount due the Contractor, segregated by Bid item quantities, Change Order Work, and other basis for payments; deductions made or to be made for prior payment; and amounts previously retained. Prior invoices and payments shall be subject to correction in the proposed Invoice for Final Payment. Payments to the Contractor will be made only for actual quantities of the Contract items of work constructed in accordance with the Contract Documents.

The City will review the Contractor's proposed Final Invoice and necessary changes or corrections will be forwarded to the Contractor. Within ten (10) Days thereafter, the Contractor

FOR COUNCIL APPROVAL ONLY

shall submit a revised proposed Final Invoice incorporating changes or corrections made by the City together with any new claims resulting therefrom. Upon approval by the City, the corrected proposed Final Invoice will become the approval Final Invoice.

If agreements are reached on all questions regarding the Final Invoice, the City will pay the entire sum found due on the approved application. However, the City will withhold sums sufficient to pay all unsettled claims for which stop payment notices have been filed pursuant to Section 9350, et seq. of the California Civil Code, together with the reasonable cost of any litigation thereunder.

Final payment will be made within thirty (30) Days after receipt of an approved Final Invoice and other required Submittals referenced above or within sixty (60) Days after Acceptance of the work by the City, whichever is later, provided, however, that if an approved Final Invoice has not been submitted within sixty (60) Days after Acceptance of the Work by the City, the City may elect to make payment of sums not in dispute without prejudice to the right of either the City or the Contractor in connection with such disputed sums. Notwithstanding the foregoing, if a Notice of Completion is recorded, final payment shall not be made prior to the expiration of the thirty-five (35) calendar day lien period. The start of this lien period is the date the Placer County Recorder's Office records the Notice of Completion.

The City may withhold from the Final Payment an amount not to exceed one hundred fifty percent (150%) of any amount in dispute between the City and the Contractor.

The making of Final Payment shall not operate to release the Contractor or its sureties from obligations arising under the Contract, the Contract bonds and warranties as herein provided. Specifically, the making of final payment shall not constitute a waiver and release of claims by the City arising from:

FOR COUNCIL APPROVAL ONLY

1. Unsettled or future liens;

2. Failure of the Work to comply with the requirements of the Contract Documents;

3. The terms of any warranties required by or contained in the Contract Documents;

4. The right to any insurance proceeds or the right to make any insurance or bond claims;

5. Any claims with respect to Contractor's obligations of indemnity with respect to claims asserted by third parties; or

6. Any latent deficiencies with the Work or Contractor's fraud.

7-1.11 **CLERICAL ERRORS.** Notwithstanding the provisions of Section 7-1.10, "Final Payment," of these General Conditions, for a period of three (3) years after Acceptance of the Work, all estimates and payments made pursuant to said Section 7-1.10, are subject to correction for clerical errors in the calculations involved in the determination of quantities and payments. The Contractor and the City agree to pay to the other any sum due under the provisions of this Section 7-1.11, provided, however, if the total sum to be paid is less than $100, no such payment shall be made.

7-1.12 **WARRANTY.** Notwithstanding inspections and Acceptance by the City of Work furnished under the Contract Documents, the Contractor hereby unconditionally guarantees that all materials and equipment furnished will be of good quality and new, that the Work will be free from defects in workmanship and materials and that the Work will conform to the requirements of the Contract Documents. Work not conforming to these requirements, including substitutions not properly approved and authorized, may be considered defective.

FOR COUNCIL APPROVAL ONLY

This warranty by the Contractor is in addition to any warranties or guarantees required elsewhere in the Contract Documents. This warranty shall be in effect notwithstanding any disclaimers, or limiting or conditional terms contained in such separate warranties furnished by manufacturers or suppliers.

The Contractor hereby agrees to repair or replace any and all Work, together with any other adjacent Work which may be displaced in so doing, that may prove to be not in accordance with the requirements of the Contract or that may be defective in its workmanship or material during the greater of a period of one (1) year after Acceptance of the Work by the City or the period specified in the Special Conditions, without any expense whatsoever to the City, ordinary wear and tear and unusual abuse or neglect excepted.

The Contractor further agrees, that within ten (10) Days after being notified in writing by the Department of any Work not in accordance with the requirements of the Contract Documents or of any defects in the Work, the Contractor will commence and prosecute with due diligence all Work necessary to fulfill the terms of this warranty, and to complete such Work within a reasonable period of time. In the event Contractor fails to comply, it does hereby authorize the Department to proceed to have such Work done at the Contractor's expense and the Contractor will honor and pay the cost and charges therefore upon demand. The Department shall be entitled to all costs and expenses, including reasonable attorneys' fees, necessarily incurred upon the Contractor's refusal to honor and pay the above costs and charges.

All warranties set forth in the Contract Documents shall be deemed cumulative and not alternative or exclusive. Nothing contained in this section shall be construed to establish a period of limitation with respect to any other obligation, which Contractor has under the Contract Documents or under any separate warranty or guaranty required thereby. The establishment of a

FOR COUNCIL APPROVAL ONLY

specific warranty period relates only to the specific obligation of Contractor to correct defective Work, and it has no relationship to the time within which its obligation to comply with the Contract Documents or applicable provision of law may be sought to be enforced, nor to the time within which proceedings may be commenced to establish Contractor's liability with respect to its obligations other than specifically to correct the Work. Without limiting the foregoing, it is understood and agreed that Contractor shall remain responsible for latent defects with its work, regardless of the expiration of any warranty period set forth in the Contract Documents.

7-1.13 **WARRANTY OF TITLE.** No material, supplies, or equipment for the Work under this Contract shall be purchased subject to any chattel mortgage, security agreement, or under a conditional sale or other agreement by which an interest therein or any part thereof is retained by the seller or supplier. The Contractor warrants good title to all material, supplies, and equipment Installed or incorporated in the Work and agrees upon completion of all Work to deliver the Premises, together with all improvements and appurtenances constructed or placed thereon by it, to the City free from any claim, liens, security interest, or charges, and further agrees that neither the Contractor nor any person, firm, or corporation furnishing any materials or labor for any Work covered by this Contract shall have any right to a lien upon the Premises or any improvement or appurtenances thereon. Provided, that this shall not preclude the Contractor from Installing metering devices and other equipment of utility companies, the title of which is commonly retained by the utility company. In the event of the Installation of any such metering device or equipment, the Contractor shall advise the City as to the legal owner thereof. Nothing contained in this paragraph, however, shall defeat or impair the right of such persons furnishing materials or labor under any bond given by the Contractor for their protection or any rights under any law permitting such persons to look to funds due the Contractor in the hands of the City.

FOR COUNCIL APPROVAL ONLY

The provisions of this paragraph shall be inserted in all subcontracts and material Contracts, and notice of its provisions shall be given to all persons furnishing materials for the Work when no formal Contract is entered into for such materials.

[END OF GENERAL CONDITIONS]

FOR COUNCIL APPROVAL ONLY

SUPPLEMENTAL CONDITIONS

Project: CO-61 Park Project

FOR COUNCIL APPROVAL ONLY

Scope of Supplemental Conditions

1. The Work shall be performed in accordance with the General Conditions and Department Standards, except as the General Conditions may be modified by the following additional City Standards, incorporated herein by this reference, if so indicated.

	COMMUNITY DESIGN GUIDELINES 311 Vernon Street, Roseville, CA 95678
X	SPECIFICATIONS FOR COMMERCIAL CONSTRUCTION (ELECTRIC) 2090 Hilltop Circle, Roseville, CA 95747
X	PARKS CONSTRUCTION STANDARDS 316 Vernon Street, Suite 400, Roseville, CA 95678
X	DESIGN AND CONSTRUCTION STANDARDS 311 Vernon Street, Roseville, CA 95678
	OTHER

Above documents are available at: www.roseville.ca.us.

2. Numbering in these Supplemental Conditions conforms to that in the General Conditions. The existence of a section in these Supplemental Conditions means that the corresponding section in the General Conditions is modified in some respect. Unless otherwise specified, the modified General Condition is deleted entirely and the provisions of these Supplemental Conditions are substituted.

FOR COUNCIL APPROVAL ONLY

SECTION 1. DEFINITIONS AND TERMS

1-1.24 **DEPARTMENT.** Section 1-1.24 of the General Conditions is amended to include the following:

The Department for Contract Administration is the Parks, Recreation & Libraries Department of the City of Roseville.

FOR COUNCIL APPROVAL ONLY

SECTION 2. CONTROL AND SCOPE OF THE WORK

2-1.08 **SUBMITTALS.** Section 2-1.08 of the General Conditions is amended to include the following:

The time allowed for review of each submittal is 10 Days after receipt of the submittal by the Director.

FOR COUNCIL APPROVAL ONLY

SECTION 3. CHANGES IN THE WORK

There are no amendments to the General Conditions.

FOR COUNCIL APPROVAL ONLY

SECTION 4. CONTROL OF MATERIALS

There are no amendments to the General Conditions.

FOR COUNCIL APPROVAL ONLY

SECTION 5. LEGAL RELATIONS AND RESPONSIBILITY

5-1.14 **AIR POLLUTION CONTROL AND ASBESTOS.** Section 5-1.14 of the General Conditions is amended to include the following:

To the best of the City's knowledge, asbestos __is NOT__ present in the vicinity of the Project. Additional information shall be made available to Contractor upon request.

FOR COUNCIL APPROVAL ONLY

SECTION 6. PROSECUTION AND PROGRESS

6-1.04 **PROGRESS SCHEDULE.** Section 6-1.04F of the General Conditions is amended to include the following:

Progress schedules showing project completion dates more than 0 Days earlier than specified in Section 6-1.07 shall be rejected.

6-1.07 **TIME OF COMPLETION.** Section 6-1.07 of the General Conditions is amended to include the following:

The Contractor shall begin Work within 10 business days after receiving a Notice to Proceed and shall diligently prosecute the Work to completion. The Work shall be completed within 100 business days of the Notice to Proceed.

If landscaping plants require an establishment period, that period will be 90 calendar days. Start of the establishment should be as outlined in the Specifications.

6-1.08 **LIQUIDATED DAMAGES.** Section 6-1.08 of the General Conditions is amended to include the following:

The amount of Liquidated Damages is the sum of $1,000 per Day.

FOR COUNCIL APPROVAL ONLY

SECTION 7: ACCEPTANCE AND PAYMENT

There are no amendments to the General Conditions.

[END OF SUPPLEMENTAL CONDITIONS]

FOR COUNCIL APPROVAL ONLY

SPECIFICATIONS

Project: CO-61 Park Project

FOR COUNCIL APPROVAL ONLY

SPEC

FOR COUNCIL APPROVAL ONLY

TABLE OF CONTENTS

TABLE OF CONTENTS
SECTION 00 31 46 PERMITS
SECTION 01 10 00 SUMMARY OF WORK
SECTION 01 57 23 STORM WATER POLLUTION CONTROL
SECTION 03 30 00 SITE CONCRETE
SECTION 12 93 00 SITE FURNISHINGS
SECTION 26 00 00 SITE ELECTRICAL
SECTION 31 10 00 CLEARING AND GRUBBING
SECTION 31 20 00 EARTHWORK
SECTION 32 12 16 ASPHALT CONCRETE PAVING
SECTION 32 15 40 DECOMPOSED GRANITE PAVING
SECTION 32 84 00 IRRIGATION SYSTEM
SECTION 32 90 00 PLANTING
SECTION 33 00 00 UTILITIES

APPENDICES

A: Geotechnical Report (provided by the City/Project Owner) 37 pages

FOR COUNCIL APPROVAL ONLY

FOR COUNCIL APPROVAL ONLY

SECTION 00 31 46
PERMITS

PART 1 - GENERAL

1.01 General Requirements

A. The requirements set forth in the General Conditions shall be in addition to the standards provided herein.

B. The requirements set forth in the Supplemental Conditions shall be in addition to the standards provided herein.

C. The intent of this Section is to furnish bidders with the known list of required permits for the Work under the Contract Documents. Bidders should note the list is not necessarily complete and additional requirements may exist or arise.

1.02 Permits

A. The Contractor shall obtain copies of the following permits from the Project Manager. Copies of these shall be obtained prior to start of work and shall be kept on the jobsite.

1. State Water Resources Control Board General Permit for Discharges of Storm Water Associated with Construction Activity.
2. City of Roseville Department of Development Services, Improvement Plan Permit for all Work related to this project.
3. City of Roseville Department of Development Services, Building Permit for all structural items associated with this project, including, but not limited to, lighting, backstops, restrooms, shade structures, drinking fountain (plumbing code), and miscellaneous electrical.

B. Contractor shall comply with the conditions of these permits, and will be solely responsible for all costs associated with meeting permit conditions unless specifically specified otherwise in these Contract Documents.

PART 2 - PRODUCTS

Intentionally left blank.

PART 3 - EXECUTION

Intentionally left blank.

FOR COUNCIL APPROVAL ONLY

END OF SECTION

FOR COUNCIL APPROVAL ONLY

SECTION 01 10 00
SUMMARY OF WORK

PART 1 - GENERAL

1.01 General

A. The requirements set forth in the General Conditions shall be in addition to the standards provided herein.

B. The requirements set forth in the Special Conditions shall be in addition to the standards provided herein.

1.02 Project Description

A. Project Name and address:

CO-61 Park
5125 Ashbrook St., Roseville, CA 95747

B. Project description/scope of work:

The scope of work for the base bid includes, but is not limited to, grading and utilities, a playground, picnic area, walking paths, turf area, planting and irrigation. Additive alternates include a swing set with containment and seating, a half-court basketball court, a shade structure over the picnic area, additional turf and irrigation, a paved bike trail, and a shade structure over the play area.

C. The Contractor, prior to submission of his bid, shall visit the site and become familiar with the physical site conditions, the plans and specifications. All existing site conditions, apparent in a detailed, on-site inspection, shall be a part of the project. Submission of a bid shall represent the Contractor's acknowledgment of the existing site conditions and its effect on the implementation of the contract documents.

FOR COUNCIL APPROVAL ONLY

1.03 Engineering

A. Field Engineering, as a part of this contract, shall include:

1. Layout of the work and establishment of lines and grades.
2. Said work to be performed by a California Registered Civil Engineer or a California licensed Land Surveyor.
3. When discrepancies between the drawings and actual site conditions are discovered, notify the Inspector for instruction on how to proceed.
4. All work shall:
   a) Establish indicated layout in relation to the property survey and existing reference points.
   b) Establish and preserve permanent reference points during the course of construction.

c) Set locations and elevations of all site elements as required for proper completion of the work.

1.04 Permits, Fees and Notices

A. The Contractor and/or his assigned Subcontractors shall obtain any and all required permits (beyond those provided by the City's Project Manager) from all governing authorities, including other City Departments, prior to start of construction.

1.05 Construction Plans

A. Any discrepancies or omissions found in the Contract Documents shall be reported to the City's project manager immediately. The City's project manager will clarify discrepancies or omissions, in writing, within a reasonable time.

B. In resolving inconsistencies among two or more sections of the Contract Documents, precedence shall be given in the following order:

1. Notice to Contractors
2. Special Provisions
3. City of Roseville Parks Construction Standards
4. City of Roseville Design and Construction Standards
5. Drawings

Addenda shall take precedence over all sections referenced therein. Figure dimensions on Drawings shall take precedence over scale dimensions. Detailed Drawings shall take precedence over general Drawings.

1.06 Definitions

A. The term "accepted" where used within, shall mean accepted in writing by the City of Roseville's Project Manager.

B. The term "Inspector", where noted, shall mean the project representative, appointed by the City of Roseville, who will oversee the project on a day-to-day basis.

C. The term "Project Manager", where noted, shall mean the project representative appointed by the Parks Department.

D. The term "Consultant", where noted, shall mean the prime Consultant listed on the cover sheet of these Specifications.

E. The term "accepted equal", where used herein, shall mean the equal in the opinion of the Project Manager, in consultation with the Consultant, when necessary, and as accepted in writing by the Project Manager.

F. The term "Project Owner", where used herein, shall mean the landowner or developer.

G. The term "provide", where used herein, shall mean furnish and install complete.

FOR COUNCIL APPROVAL ONLY

H. The term “as selected”, where used herein, shall mean as selected by the Consultant and as accepted by the Project Manager.
I. The term “substantially complete”, where used herein, shall mean the state of which the project can be used in the manner of which it is intended with the exception of minor items as determined by the Project Manager.
J. See Section 1 of the General Conditions for additional definitions and terms.

1.07 Standards

A. Numerous standards are referenced in these contract documents. The referenced standards shall be the current edition as of the date of these contract documents. Also, see Section 4 - 1.02 of the General Conditions.
B. The codes adopted by the City, County, State and federal agencies shall govern minimum requirements for this project. Where codes conflict with these Specifications, the more stringent shall apply, and such conflicts shall be brought to the attention of the Project Manager. Caltrans Standards shall be applied where specifically referenced. In the absence of specific reference requirements in the contract documents, the applicable codes shall govern.
C. In addition to the standards noted in individual sections of these Specifications, standards of the following organizations shall be noted by initials only.
    1. ANSI: American National Standards Institute.
    2. ASTM: American Society for Testing and Materials.

1.08 Submittals

A. All submittals shall be submitted at one time within ten (10) working days from issuance of Notice to Proceed. The review time for submittals shall be as noted in Section 2 - 1.04 of the Special Conditions. Items returned for re- submittal shall be returned to the City within two weeks
B. The Contractor shall include a cover sheet indicating the following (A sample is provided in Section 5: Forms):
    1. Drawing sheet or specification section reference (by section, paragraph and sub-paragraph numbers);
    2. Item description;
    3. Indication whether this item is “as specified” or “proposed substitution” and
    4. A space for itemized response summary, e.g. “reviewed” or “resubmit”.
C. Contractor shall provide submittals electronically in PDF file format and physical product samples as required in specifications. It shall be the Contractor’s responsibility to ensure the summary sheet is included in the submittal package. Incomplete submittal packages (i.e., the lack of a summary sheet or lack an appropriate product sample) will not be reviewed.
D. Proposed substitution requests must include a comparison between the originally specified item and the proposed substitute. The burden of proof of

FOR COUNCIL APPROVAL ONLY

compliance for proposed substitutions with project requirements rests with the Contractor. Coordination of the installation of accepted substitutions, including incidental changes/modifications to accommodate proposed products shall be at no additional cost to the Owner.

E. Where required in specified Section of these Specifications, submittals shall include proof of order of site furnishings, play equipment or other materials within two weeks (ten working days) of receipt of the returned, approved submittal. Submittals of orders shall be made at one time. Exceptions will be considered, with justification.

1.09 Tests

A. In addition to Section 4 - 1.03 of the General Conditions, testing and inspections may be performed by a private testing laboratory. The testing laboratory, provided by the City, shall be under the direction of a California registered civil engineer. All work shall conform to requirements set forth by ASTM B329, and shall be acceptable to the City.

B. Copies of the laboratory reports/results of each test or inspection shall be provided to the Project Manager, Inspector and Contractor.

1.10 Temporary Facilities

A. Sanitary provisions shall be the responsibility of the Contractor. Existing restroom facilities shall be not utilized by the Contractor, his Sub-contractors, or employees thereof, unless specifically accepted by the Project Manager. Provide chemical toilets or water closets and urinals connected to the sewer in a location accepted by the Project Manager.

B. Barricades shall be the responsibility of the Contractor and shall be erected as necessary to protect the property, the construction and the public from hazards due to construction.

C. Signs, other than those identified in these Specifications, shall be prohibited. Notices, required by law, shall be posted and maintained.

1.11 Utilities

A. All utility fees, including, but not limited to, connection fees, installation fees, meters, monthly service fees and cost of utilities used during the course of construction and establishment are considered a direct cost and are the responsibility of the Contractor until project acceptance by City Council.

1.12 Dust/Noise Control Requirements

A. Dust and other air pollution nuisances on or adjacent to the site shall be abated, per Section 2 - 1.15 of the General Conditions. Dirt shall not be allowed to accumulate on streets or sidewalks nor be washed into sewer.

FOR COUNCIL APPROVAL ONLY

B. Noise from construction operations shall be kept to a minimum. Allowable hours of operations shall be from 7 a.m. to 7 p.m. Monday through Friday. Work on weekends and holidays must be approved by the project manager. Work on weekends and holidays shall not begin before 8 a.m. and must be completed by 8 p.m.

1.13 Tree Replacement Schedule

A. Trees damaged or removed without prior approval shall be replaced at an inch per inch basis on-site, except otherwise accepted. New stock shall follow the table provided:

Plant Size	Inch Value
3 Five Gallon Stock	One Inch
1 Fifteen Gallon Stock	One Inch
1 24” Box Stock	Two Inches
1 36” Box Stock	Three Inches

1.14 Inspection of Construction

A. In addition to the routine inspections performed by the Parks Inspector, portions of work may be inspected by the other city departments. Notify the Parks Inspector and Project Manager a minimum of 48 hours prior to date of inspection.

B. The Parks Inspector shall be the main line of communication between the site superintendent, the project manager and other City department inspectors. Changes in scope of work or standards shall be approved by the project manager.

C. Refer to the parks inspection record. This shall be issued at the Pre-Construction meeting and shall be utilized by the Contractor throughout the course of construction. A completed “hard card” shall be submitted to the Project Manager along with required turn in items (See 1.19 this Section) upon final acceptance of the project. The Notice of Completion shall not be filed until all record documents have been received and accepted.

1.15 Adverse Impacts to Site Conditions Due to Construction

A. Impacts that affect the site conditions to the detriment of the park or streetscape impacts that affect the site conditions to the detriment of the park or streetscape construction or long term viability of the site shall be mitigated by the contractor prior to acceptance of the project. Such impacts shall include, but are not limited to:

1. Soil compaction in non-structural areas;
2. Diesel or gas fuel leaks/spillage;
3. Buried concrete or other construction debris;
4. Hazardous material contamination;

FOR COUNCIL APPROVAL ONLY

5. Lime treatment in planting areas;
6. and more.

1.16 Pre-final (Punch List) Review

A. Notify, in writing, to the Parks Construction Inspector, that the work is substantially complete. Substantially complete is defined as “the state of work where it may be used in a suitable and intended manner with exception of minor corrections”. Partial acceptances will not be granted. Items to be reviewed as a part of substantial completion include:
   1. All construction items
   2. Installation of all site furnishings, including lights and signs
   3. All planting, including mulch installation and weed control of planted areas.
      a) For sodded turf, upon sod installation
      b) For seeded turf, upon second mowing as described in Section 329000, Part 3.11.

   4. The irrigation system is fully functioning as designed and as confirmed by the landscape irrigation audit.

B. Within five workings days of receipt of notification, the Parks Construction Inspector will confirm substantial completion. The Parks Construction Inspector will schedule the punch list walk (pre-final review) within five working days after the project has been determined as substantially complete. A formal punch list will be developed at the punch list walk. The Parks Construction Inspector will provide a copy of the formal punch list to the Contractor within five working days of punch list walk. Performance of the punch list walk does not automatically trigger the start of establishment.
   1. If at any point during this review it becomes apparent the Contractor has not properly prepared for the site review, the inspection shall immediately be terminated and re-scheduled at such a time as the site has been readied for a review. Any costs for the re-scheduling of the review shall be the responsibility of the Contractor. Lack of site preparation could delay start of the establishment period.

C. Concurrent to the pre-final review, the City will make a formal request for all required turn-in items to be submitted to the City. All turn-in items shall be submitted in their entirety to the City’s Park Construction Inspector. Partial turn-in packages will be rejected.

D. Once all turn-in items have been confirmed to be complete and accurate, the establishment period may be considered to begin. The City shall have sole discretion in determining the appropriateness of the commencement of the establishment period and shall notify the developer/contractor in writing of the

FOR COUNCIL APPROVAL ONLY

start and end dates. Portions of the project will not be accepted for establishment prior to the substantial completion of the entire project.

1.17 Establishment Period

A. The duration of the establishment period shall be:
   1. For seeded turf in parks: Ninety (90) calendar days, minimum, and until the Notice of Completion (NOC) for City-built parks has been approved by the City Council, or the deed transferring property ownership, has been recorded at the County for Developer-built parks.
   2. For sodded turf in parks: Forty-five (45) calendar days commencing between March 1st and October 31st and sixty (60) calendar days commencing between November 1st and February 28th, and until the Notice of Completion (NOC) for City-built parks has been approved by the City Council, or the deed transferring property ownership, has been recorded at the County for Developer-built parks.
   3. For streetscapes: Thirty (30) calendar days, minimum, and until final acceptance of all related street improvements subject to approval of a Notice of Completion by the City Council. The inclusion of large box trees (36" box and greater) may require an extended establishment period of ninety (90) calendar days, as noted on plans.

B. Active maintenance is required throughout the entire establishment period. Active maintenance is defined as:
   1. All areas within the project site shall be protected against damage including vandalism, erosion, trespass, rodents and other acts. Immediately repair all damaged areas.
   2. All walkways and paved areas shall be kept clean and all debris within planting and turf areas shall be immediately removed.
   3. Automatic irrigation controller shall be fully utilized and irrigation system monitored and adjusted as described in Section 32 84 00 4.03.
   4. All plant and turf maintenance as described in Section 32 90 00 3.11

C. Prior to the start of the final thirty (30) days of establishment:
   1. All punch list items shall be completed.
   2. All certifications and testing shall be completed.
   3. All plantings and turf shall be thriving and in a healthy condition.
   4. The lack of active maintenance prior to the final thirty (30) days may constitute a delay in the start of the final thirty (30) days of the establishment period.

FOR COUNCIL APPROVAL ONLY

1.18 Final Review

A. One (1) week prior to the end of the establishment period, a final on-site review shall be conducted to review project readiness for final turn-over. All punch list items must be satisfactorily addressed prior to the final review.
B. The project shall be prepared and cleaned per Section 2 - 1.12 of the General Conditions; the turf shall be mowed; and the irrigation heads shall be adjusted appropriately one day prior to the scheduled final review.
C. Acceptance of the project shall be considered “field accepted” and a recommendation will be forwarded to the City Council for “final acceptance” per Section 7 - 1.01 of the General Conditions.
D. An unaccepted project shall extend the establishment period until such time as the unaccepted portions of the project have been reviewed and field accepted by the Inspector and Project Manager.
E. Turn over for City maintenance shall occur only after:
    1. The specified duration of the establishment period has been successfully completed.
    2. If required, the deed transferring property ownership, has been recorded at the County.
    3. A Notice of Completion (NOC) for city-built parks and for streetscapes has been approved by the City Council.
F. Contractor shall provide a written guarantee covering all improvements associated with this project. See 1.19 – Warranties and Guarantees.

1.19 Record Documents

A. Record documents or as-built plans shall be maintained on-site and updated routinely as specified in Section 2 - 1.13 of the General Conditions. Record documents shall include **all items under the contracted scope of work**.
B. Record documents shall be submitted:
    1. two sets 11 x 17 laminated reductions of the irrigation plan illustrating with colors the individual controller stations; and
    2. Electronically submit PDF scanned images (in color) of the verified/initialed as-built drawings.
    3. For City of Roseville CIP projects, SWPPP binder.

1.20 Warranties and Guarantees

A. Warranties are required under various Sections of these Specifications. Prior to final acceptance, the Contractor shall combine all warranties into a single electronically submitted PDF, . All warranties shall be clearly labeled and the number of years highlighted. Also, see Sections 7 - 1.10 and 7 - 1.11 of the General Conditions.

FOR COUNCIL APPROVAL ONLY

1. Warranties for equipment shall be submitted in the manufacturer's standard form and shall be countersigned by the subcontractor or supplier and the Contractor.
2. All other warranties shall be provided in the following format, written on subcontractor's or supplier's letterhead, signed by the subcontractor or supplier and countersigned by the Contractor:

WARRANTY FOR _____ YEARS

"We hereby warrant that the ***product*** which we have installed at ***project name*** has been done in accordance with the contract documents, and that the work, as installed will fulfill the warranty requirements included in the Specifications.

We agree to repair or replace any or all of our work, together with any other adjacent work which may be displaced by so doing, that may prove to be defective in its workmanship or material within the warranty period stated above commencing from the date of final acceptance of the above named project by the City of Roseville's City Council, without additional expense to the City, ordinary wear and tear and unusual abuse or neglect excepted.

In the event of failure to comply with the above conditions within thirty (30) days of notification by the City, we collectively or separately do hereby authorize the City to proceed with the repairs or replacement of such defects at our expense. Payment of said costs and charges will be forwarded to the City upon demand.

Signed: _____ _____
Subcontractor or Supplier Date

Countersigned:_____ _____
Contractor Date

B. Guarantees shall be a minimum of one (1) year for all plant material, including trees and shrubs. The guarantee shall state that plant materials (trees & shrubs) to be free of all defects or disease and all plants are in a healthy and thriving condition at the completion of the contract. Deciduous plant material shall be warranted beyond the time of contract completion until such time as growth becomes evident.

PART 2 - PRODUCTS

Intentionally left blank.

FOR COUNCIL APPROVAL ONLY

PART 3 - EXECUTION

Intentionally left blank.

END OF SECTION

FOR COUNCIL APPROVAL ONLY

SECTION 01 57 23
STORM WATER POLLUTION CONTROL

PART 1 - GENERAL

1.01 General

A. The requirements set forth in the General Conditions shall be in addition to the standards provided herein.
B. The requirements set forth in the Special Conditions shall be in addition to the standards provided herein.

1.02 References

A. State Water Resources Control Board Order No. WQ 2022-0057 DWQ National Pollutant Discharge Elimination System General Permit No. CAS0000002, for Storm Water Discharges Associated with Construction and Land Disturbance Activities.
B. CASQA California Stormwater BMP Handbook – Construction, October 2024.

1.03 Definitions

A. NOI: Notice of Intent
B. NOT: Notice of Termination
C. QSP: Qualified SWPPP Practitioner
D. QSD: Qualified SWPPP Developer
E. SWPPP: Storm Water Pollution Prevention Plan
F. SWRCB: State Water Resources Control Board
G. NPDES: National Pollutant Discharge Elimination System
H. WDID: Waste Discharger Identification number
I. BMP: Best Management Practices

FOR COUNCIL APPROVAL ONLY

PART 2 - PRODUCTS

Intentionally left blank.

PART 3 - EXECUTION

3.01 SWPPP

A. Comply with State Water Resources Control Board Order No. WQ 2022-0057-DWQ National Pollutant Discharge Elimination System General Permit No. CAS000002, for Storm Water Discharges Associated with Construction and Land Disturbance Activities.

B. A SWPPP has been developed for this project. The SWPPP is a dynamic document and will change as conditions (weather or construction phases) warrant.
C. Implementation of the SWPPP is the responsibility of the Contractor and a part of this project. Costs associated with implementation and maintenance of the BMPs per the SWPPP shall be included in the lump sum base bid.
D. Major changes to the SWPPP shall be reviewed by the City's QSD prior to implementation. Cost associated with the major changes will be paid for using the unit cost listed in the Additions or Deletions Sheet of the Proposal
E. The City's QSD/QSP will perform weekly inspections of the jobsite. Implementation of and minor changes to the SWPPP as directed by the City's QSP shall be incidental to the Work. Contractor shall start all inspection corrective actions within 72 hours of observation, and complete as soon as possible.
F. All BMPs installed will be inspected by the City's QSD/QSP for compliance with the SWPPP and BMP Fact Sheets. BMPs that are not in compliance shall be brought into compliance by the Contractor at no cost to the City.
G. An electronic copy of the SWPPP will be provided to the contractor. The contractor shall keep a binder on-site for inspection reports, and will make the inspection binder available upon request.
H. The SWPPP shall be readily available throughout the course of construction and until the NOT has been accepted by SWRCB. The SWPPP shall be made available upon request by a representative of the Regional Water Quality Control Board, State Water Resources Control Board, United States Environmental Protection Agency, or City' storm water staff.
I. At the end of the establishment period, the Contractor shall submit copies of all inspection reports and sampling and analysis results to the City's Project Manager.

FOR COUNCIL APPROVAL ONLY

3.02 Schedule

A. Contractor shall develop a Water Pollution Control Schedule that describes the timing of grading or other work activities that could affect water pollution. The schedule shall be updated by the Contractor to reflect changes in the Contractor's operations that would affect the necessary implementation of water pollution control practices. The typical sequence of work shall be adjusted by the Contractor based on weather conditions and forecasted rain events. The schedule is considered an appropriate and applicable BMP.

3.03 Penalties and fines

A. Contractor is responsible for all penalties and fines assessed to or levied on the project related to the implementation of the SWPPP.

B. In an effort to maintain compliance with the General Permit, the Contractor may be asked to make changes to the BMPs. If the Contractor is unable to perform these services in a timely manner the City reserves the right to address any areas of concern and deduct the cost from the contract.

3.04 BMP's

A. Construction BMP's shall be installed per the Erosion / Sediment Control Plan and project SWPPP, and in accordance with the CASQA California Stormwater BMP Handbook. Use of alternative BMP's will be reviewed and accepted at the discretion of the City's QSD.

3.05 Cleaning

A. Thoroughly clean all areas where work has occurred. Remove from the site excess material, debris and rubbish.

B. Take all precautions to protect completed work. Immediately repair or replace all damaged areas due to tire ruts, erosion, compaction failure, etc. Keep all erosion control measures intact.

END OF SECTION

FOR COUNCIL APPROVAL ONLY

FOR COUNCIL APPROVAL ONLY

SECTION 03 30 00
SITE CONCRETE

PART 1 - GENERAL

1.01 General Requirements

A. The requirements set forth in the General Conditions shall be in addition to the standards provided herein.

B. The requirements set forth in the Supplemental Conditions shall be in addition to the standards provided herein.

C. The standards set forth in the City of Roseville Design and Construction Standards and the City of Roseville Parks Construction Standards, latest editions, shall be in addition to the standards provided herein.

1.02 Description

A. Furnish all labor, materials and equipment for the complete installation of all concrete work, flatwork and poured-in-place as shown in the Plans and as specified herein.

1.03 References

A. Caltrans Standard Specifications, latest edition.

B. California Building Code (CBC) and California Administrative Code (Title 24), latest editions.

1.04 Quality Assurance

A. For all flatwork, the Contractor shall pour a six-foot by six-foot (6’ x 6’) sample of each type of finish specified for review and acceptance by the Project Manager prior to pouring any concrete. The accepted samples shall remain on-site and intact until all concrete work has been completed. The quality of the concrete work shall be measured by the accepted samples.

B. During the course of construction, a qualified testing laboratory shall obtain samples as determined by the Inspector and conforming to federal and state codes and standards. Such costs shall be paid for by the City. Re-tests and removal of below acceptable strength concrete shall be borne by the Contractor. The Contractor shall cooperate with the testing during the course of obtaining such samples.

C. Variances in surface grades of more than 1/8”, as measured by a straight edge ten feet (10") long, shall be corrected to the satisfaction of the Inspector. Remove all areas where standing water occurs, including any surface irregularities.

FOR COUNCIL APPROVAL ONLY

1.05 Handling and Storage

A. Comply with ASTM C-94, “Specifications for Ready Mix Concrete” for the batch, mix and transport of concrete.
B. Mix and deliver only the amount that will be poured immediately.

1.06 Record Drawings

A. The Contractor shall keep an accurate record of the as-built conditions of the site concrete. These records shall be updated daily and kept at the construction site. At any time, the Inspector may examine the conditions of the “as-builts” to ensure compliance of the above.

PART 2 - PRODUCTS

2.01 Concrete

A. Concrete for play area curbs, sidewalks, and accessible ramps shall conform to the provisions of Section 90-2 “Minor Concrete” of the Caltrans Standard Specifications. Cementitious material shall be „Type II Modified” and shall contain no less than 505 pounds of cementitious material per cubic yard. Aggregate shall be not greater than one-inch or smaller than 3/8-inch. Submit concrete analysis for review and acceptance prior to placement of concrete.

2.02 Fiber Reinforcement

A. Fibers for concrete shall conform to ASTM C1116 Type III and manufactured specifically for the secondary reinforcement of concrete. Fiber length to be 0.50” or 0.75”. Acceptable products include Fibermesh 150, as manufactured by Sika USA, or accepted equal.

2.03 Expansion Joint Material

A. Fiber expansion joint shall conform to ASTM-1751 and shall be a non-extruding resilient filler. Filler shall have preserve attributes and high quality bituminous materials.
B. Apply Sikaflex elastomeric sealant, or accepted equal, over all expansion joints.

2.04 Concrete Forms

A. All forms shall be new at the start of the project.. Minimum size lumber shall be 2 x 6.
B. Radius bends shall be formed by spring steel forms or laminated boards, as required.
C. Plywood shall be 5/8”, Class I, exterior grade as outlined in APA “Guide to Plywood Grades”. Omit mill oiling treatment.

FOR COUNCIL APPROVAL ONLY

PART 3 - EXECUTION

3.01 Poured-In-Place Concrete

A. Concrete for hardscape or flatwork shall be placed on subgrade compacted per geotechnical engineer recommendations.. Prior to placement of concrete, a soils compaction test must be performed by an accepted soils testing professional on a representative number of locations along the flatwork area. The City or project owner shall provide the initial test. The results of these tests must be available and meet acceptable levels prior to pouring. Re-tests and re-work of any area, as directed by the soils professional, shall be the responsibility of the Contractor.

B. Construct forms to conform to the shapes, dimensions and details shown on the Plans. All forms shall be true to lines, plumb, level and square.

C. Forms shall not leak, spread, shift or settle when concrete is placed.

D. All forms shall carry dead and live loads and shall not deflect more than 1/8" between supports after placement of concrete.

E. All forms shall be thoroughly soaked a minimum of twelve (12) hours prior to pouring of concrete. Forms shall be treated per manufacturer's recommendations.

F. Reuse of forms may be allowed at the discretion of the Inspector. Reused forms shall be cleaned and free of defects that would affect the final concrete finish.

G. Concrete footings shall be formed only when excavations slump or cave in. Over-excavate the trench or footing diameter to accommodate the forms' installation and removal. Apply water to moisten soil. Do not allow water to create mud or ponding.

3.02 Fiber Reinforcement

A. Install per manufacturer's instructions. Apply at the batch plant prior to delivery. Thoroughly mix fiber material to avoid "clumping".

3.03 Expansion Joints

A. Expansion joints shall be placed where vertical elements meet horizontal paving unless otherwise noted on the Plans. This shall include vertical expansion joints on play area curb walls, buildings, shade structures, walls and/or planters. The corners of the paving shall be tooled at the expansion joints. Trim exposed fibers which protrude above or beyond the finish surface of paving or the finish surface of the wall.

3.04 Control Joints for Concrete Sidewalks

A. Control joints shall be per Parks Standard Details with deep, straight and finished with rounded edges. Control joints shall be placed (on-center) a

FOR COUNCIL APPROVAL ONLY

distance equal to the width of the concrete walkway, unless otherwise shown on the Plans. For example a ten-foot wide walkway shall have control joints placed ten feet on center. Control joints shall not dead-end into an adjacent panel, and shall not create acute angles that are prone to break off.

3.05 Sawcutting of control joints shall begin as soon as the concrete surface has hardened sufficiently to resist raveling.

3.06 Placement of Concrete

A. Do not pour concrete in weather below 40 degrees F. or when temperatures are predicted to fall below freezing within 24 hours, except with prior authorization.

B. Concrete shall be transit mixed according to ASTM C-94. Discharge ready-mixed concrete from transport vehicle while the concrete is still plastic and before stiffening occurs.

.

C. Concrete shall be deposited up to the finished height of the forms and up to the adjacent joint. No partial pours will be allowed. Excess material shall be dumped on-site and later removed by the Contractor.

D. Thoroughly consolidate the concrete by manually spading and tamping concrete into all corners of the forms and by utilizing a high-speed mechanical vibrator. Retain a standby vibrator on-site during the course of concrete work. When utilizing the vibrator, take precautions to avoid impact on the forms.

E. After obtaining uniform consolidation, screen tamper all flatwork surfaces, screed and bull float to ensure that large aggregates are pushed below the surface. When it is practical to work on the surface, wood float, steel trowel paving to a uniform surface.

F. Concrete elements shall not exceed the following tolerances:
   1. Linear: 1/8”
   2. Slab deviation: 1/8” in 10’

FOR COUNCIL APPROVAL ONLY

3.07 Finishes

A. Finishes shall be as shown on the Plans and shall be consistent in quality throughout the project. No visible cracks or discoloration will be accepted. Finishes on vertical surfaces shall be consistent throughout. Vertical expansion joints are spaced as identified on the plans and are smooth with the finish surfaces. All edges for flatwork and vertical surfaces shall be eased at a consistent radius.

B. Upon completion of float finishing, provide the final finish as follows:

1. Medium Broom Finish: shall be accomplished by pulling a stiff bristle broom across a floated surface. The direction of the broom shall be perpendicular to the path of travel, unless otherwise shown on the Plans.

3.08 Removal of Forms

A. Form removal timing to be based on the concrete set strength and environmental conditions unless specifically called out on the drawings.

B. Remove all bolts, nails, ties, wires, etc. a minimum of one inch (1”) below the surface of the concrete. Remove imprints, irregularities or other such defects and patch as directed by the Inspector.

3.09 Curing and Protection

A. Allow adequate time for the concrete to cure. Contractor to take necessary steps to minimize evaporation and maximize the process of hydration.

B. Protect all concrete from damage during the curing period. Should damage occur, Contractor shall take immediate action to repair damage or replace damaged concrete to the satisfaction of the City.

3.10 Clean-Up

A. During the course of this work, the area shall be kept clear and free of debris as realistically as possible. Upon completion of concrete work, completely remove from the site all used forms, hardware, spillage, rejected work and other materials.

B. Remove from site furnishing posts all concrete “slobber”. Re-touch posts as necessary for a clean finish.

FOR COUNCIL APPROVAL ONLY

END OF SECTION

FOR COUNCIL APPROVAL ONLY

FOR COUNCIL APPROVAL ONLY

FOR COUNCIL APPROVAL ONLY

FOR COUNCIL APPROVAL ONLY

FOR COUNCIL APPROVAL ONLY

FOR COUNCIL APPROVAL ONLY

FOR COUNCIL APPROVAL ONLY

SECTION 12 93 00
SITE FURNISHINGS

PART 1 - GENERAL

1.01 General Requirements

A. The requirements set forth in the General Conditions shall be in addition to the standards provided herein.

B. The requirements set forth in the Supplemental Conditions shall be in addition to the standards provided herein.

1.02 Description

A. Furnish all labor, materials and equipment for the complete installation of all site furniture, including play equipment and play surfacing, as shown on the Plans and as specified herein.

1.03 References

A. All play equipment shall meet or exceed the standards set forth by the Consumer Product Safety Commission (CPSC), comply with the Americans with Disabilities Act (ADA), meet all current ASTM standards and be consistent with State and local codes.

B. The play area surfacing shall meet or exceed the fall absorption/impact rates set forth by the CPSC guidelines and ASTM standards. The surfacing shall be an accessible surface and manufactured specifically for play areas.

C. Nothing in the Plans or Specifications is to be construed to permit work not conforming to regulating codes and standards. The Contractor shall furnish without extra charge any material and labor, when required, by the compliance with these rules and regulations, even though the work was not mentioned in these particular Specifications or shown on the Plans.

D. The product manufacturer shall supply complete Specifications for the installation of all site furnishings, including play equipment and play surfacing.

1.04 Submittals

A. Submittals for specified items are required. The Contractor shall submit a materials summary sheet indicating which items will be installed as specified and which items are proposed for substitutions. The Contractor shall submit proof of order within ten (10) working days of the Notice to Proceed, indicating all specified materials have been ordered, noting “as specified” or “substitution proposed”. For the following items, also provide:

FOR COUNCIL APPROVAL ONLY

1. Play Equipment and Swings submittals shall include color samples, manufacturer's materials and parts list, and installation instructions.
2. Shade Shelter submittal shall include color samples, manufacturer's materials and parts listed, and installation instructions.
3. All items with "color as selected by City" shall include color samples.

B. On the date of the Notice to Proceed, the Contractor shall immediately place the order to purchase all site furnishings, including the play equipment and play surfacing as specified on the Plans and as outlined herein. **Proof of all orders shall be submitted to the Project Manager within ten (10) working days of the Notice to Proceed.**

C. The Contractor shall submit a Certificate of Compliance from a third party certified playground inspector which verifies that the entire playground, including individual components, and surfacing meets or exceeds regulated requirements as described in Section 1.03 above.

1.05 Record Drawings

A. The Contractor shall keep an accurate record of the as-built conditions of the miscellaneous site amenities. These records shall be updated daily and kept at the construction site. At any time, the Inspector may examine the conditions of the "as-builts" to ensure compliance of the above.

PART 2 - PRODUCTS

2.01 Materials

A. Play Equipment shall be custom configuration as shown on the Plans and as specified herein. The equipment shall be as distributed by *All About Play, contact Glen Wurster, 916-923-2180*, and as manufactured by *Little Tikes Commercial* or accepted equal. Color as selected by the City.

B. Swings shall be the custom configuration as shown on the Plans as distributed by All About Play, contact Glen Wurster, 916-923-2180, and as manufactured by Little Tikes Commercial, or accepted equal. Color as selected by the City.

C. Engineered wood fiber shall be clean, engineered wood fiber, manufactured specifically for play areas.
   1. Engineered wood fiber manufacturer shall provide testing certification by an independent testing agency that the results comply with CPSC guidelines and ASTM standards.
   2. Engineered wood fiber shall meet the following requirements: ASTM F1951-99 (ADA Compliance Test) and ASTM F 1292-96 (Shock Absorbency).

FOR COUNCIL APPROVAL ONLY

3. Manufacturer shall provide a Certificate of Insurance that shall provide coverage for products liability with the limit of liability not less than $1,000,000.
4. The manufacturer shall also provide written guarantee for three (3) years from the date of installation against decay and biochemical degradation calling for replacement of defective materials during the guarantee period.
5. Manufacturer certifies that the engineered wood fiber has been installed in not less than three (3) sites for periods of not less than three (3) years demonstrating the claims made with regard to these Specifications.

D. Picnic Tables shall be as shown on the Plans and as specified herein. The tables shall be as distributed by *All About Play, contact Glen Wurster, 916-923-2180,*, and as manufactured by *MyTCoat* or accepted equal. Tables shall be in-ground mount and made of perforated steel. Color as selected by the City.

E. Benches shall be as shown on the Plans and as specified herein. The benches shall be as distributed by *All About Play, contact Glen Wurster, 916-923-2180,*, and as manufactured by *MyTCoat* or accepted equal. Benches shall be made of perforated steel and surface-mount, unless otherwise specified on plans. . Color as selected by the City.

F. Drinking Fountain shall be MDF #10145 SM (bottle filler, dual bowl and accessible) and stainless steel surface carrier as distributed by Husbands and Associates (800) 821-9838 and as manufactured by Most Dependable Fountains or accepted equal. Color to be stainless powder coated black or as approved. Include recessed hose bib with locking cover, stainless steel control valves with O-rings, and external stainless steel surface mount carrier.

G. Park Identification Sign shall be fabricated by Quick Crete Products Corp., Norco, CA, (916) 447-8644, or by Outdoor Creations, Inc., Anderson, CA, (530) 365-6106, or accepted equal.

H. Play Area Age-Appropriate Signage shall contain the following language: "This play area has been designed for the use of children aged *5-12* years of age."

I. Park Namesake Plaque shall be a 24" by 18" digital high pressure laminate graphic panel fabricated or accepted equal. Plaque shall be mounted on a SlimLine single pedestal sign system or accepted equal. Manufacturer for the plaque and sign system (model # 2418 SL-SLP-AL) is KVO Industries (Chris Howell, (707) 573-6868). Installation location shall be verified in the field with the Project Manager.

J. Playground rules sign shall be as fabricated by Gopher Sign Company, (651) 698- 5095, or accepted equal.

FOR COUNCIL APPROVAL ONLY

K. Line Paint (for basketball courts): Hawker - Laykold; Koch Materials - Decocolor; Extol - Color; L&M - Nova acrylic; California Products Corp - Plexicolor Laykold; or accepted equal.

L. Trash Receptacle shall be as shown on the Plans and as specified herein. The trash receptacle shall be as distributed by *All About Play, contact Glen Wurster, 916-923-2180*, and as manufactured by *MyTCoat, model number RDW32-D-02-002* or accepted equal.

M. Shade Shelter shall be as shown on the Plans and as specified herein. The *Shade Shelter* shall be as distributed by Miracle Play systems LLC, contact Shana Friesen, shana@miracleplaysystems.com, and as manufactured by Poligon, or accepted equal. Color as selected by the City.

N. Basketball Standard shall be as shown on plans and as specified herein. The Basketball Standard shall be distributed by Miracle Playsystems LLC, contact Shana Friesen, shana@miracleplaysystems.com and as manufactured by Patterson Williams or accepted equal.

1. Post shall be Patterson Williams, model # 1513G, dual post, 3 ½" O.D. post, 6' offset galvanized,
2. Backboard shall be Patterson Williams, model # 26 (LA-26), 45" H x 60" W rectangle backboard, heavy duty ¼" thick steel, powder coated white, with targe and perimeter
3. Rim shall be Patterson Williams, model # 44 (LA-44), heavy duty double rim for chain net with universal mount plate.

PART 3 - Net shall be Patterson Williams, model #35, super chain netEXECUTION

3.01 Installation

A. Contractor to provide experienced workers or subcontractors to install all site furnishings, including the play equipment and play surfacing described in these Specifications. The workers or subcontractor must demonstrate that at least five (5) similar play structures and five (5) play surface applications similar to that specified for this project have been installed in the last three (3) years.

B. All site furnishing, including play equipment shall be installed per manufacturer's instructions.

C. Engineered wood fiber shall be blown in place to avoid damage to adjacent improvements unless specifically approved by City.

D. Heights of tables and benches shall be as follows, unless otherwise required by ADA; California Title 24 or other code requirements:

Description	Height Above Finish Grade
Table Surface Height	34" Maximum
Knee Space Height	27" Minimum Clear Space

FOR COUNCIL APPROVAL ONLY

Knee Space Depth	17” Minimum from edge of table to nearest obstruction under table top
Width of Knee Space	30” Minimum clear width beneath table
Bench Surface Height	16” Minimum, 18” Maximum

E. Heights for play equipment, including ramps and transfer decks shall comply with the approved recommendations by the U.S. Architectural and Transportation Barriers Compliance Board: Play Facilities Regulatory Negotiation Committee.
F. For play equipment, locate all footings prior to installation of drain lines. Adjust drain lines to accommodate play structure footings. Provide appropriate fall zones as shown on the Plans and per applicable codes and guidelines.
G. All footings shall be Class A concrete with 3/4” maximum size aggregate, unless otherwise noted. Footings shall be in accordance with Caltrans Standard Specifications, Section 90. Install all footings below finish surface. In paved areas, install paved surface over footing for a clean finished surface as shown on the Plans.
H. Carefully install all furnishings and equipment without disturbance to adjacent finishes. Contractor shall be responsible for the damage and subsequent repairs of damaged finished product.
I. Install park namesake plaque. Installation location shall be verified in the field with the Project Manager.
J. Install age-appropriate stickers on all play structures, per manufacturer’s instruction.
K. Install playground rules sign. Installation location shall be verified in the field with the Project Manager.

FOR COUNCIL APPROVAL ONLY

3.02 Cleaning

A. Thoroughly clean all areas where work has occurred. Remove from the site excess material, debris and rubbish.
B. Take all precautions to protect completed work. Immediately repair or replace all damaged areas due to tire ruts, erosion, compaction failure, etc. Keep all erosion control measures intact.

PART 4 - WARRANTY

4.01 General

A. Contractor shall warranty all site amenities included under this Section.
B. Contractor shall also provide a written warranty covering all materials, equipment and workmanship furnished by him to be free of all defects after installation is accepted, including all defective parts that may have been found.
C. Submit written warranty on company letterhead addressed to the City when providing As-built drawings.

D. Contractor shall submit to the City, upon completion of work, a Certificate of Compliance by a third party certified playground inspector for the installation of the play structure and safety surfacing. Certification shall include testing for compliance of ASTM 1292 (Impact Attenuation of Surfacing Systems under and around Play Equipment). All tests, including re-tests, shall be the responsibility of the Contractor. Submit all test results to the City.
E. Submit maintenance manual for poured-in-place resilient surfacing.
F. Contractor shall submit to the City, upon completion of work, a Certificate of Compliance from the manufacturer of the play structure for the installation of the play structure.
G. Contractor shall submit to the City, upon completion of work, critical fall criterion used to certify all play surfacing material.
H. Attach cut sheets of installed items to the warranty.

END OF SECTION

FOR COUNCIL APPROVAL ONLY

SECTION 26 00 00
SITE ELECTRICAL

PART 1 - GENERAL

1.01 General Requirements

A. The requirements set forth in the General Conditions shall be in addition to the standards provided herein.

B. The requirements set forth in the Special Conditions shall be in addition to the standards provided herein.

C. The standards set forth in the City of Roseville Design and Construction Standards, latest edition and requirements outlined by the City of Roseville Electric Department shall be in addition to the standards provided herein.

D. The standards set forth in the latest edition of the California Electrical Code (CEC), incorporating the latest edition of the NEC with City of Roseville amendments shall be in addition to the standards provided herein.

1.02 Description

A. Furnish all labor, materials and equipment for the complete installation of site electrical as shown in the Plans and as specified herein.

B. Submittals shall be required for requested substitutions or plan deviations ONLY. The Contractor shall install all specified electrical fixtures, poles and equipment, unless otherwise accepted and determined as an equivalent.

1.03 References

A. Conform to requirements outlined in the latest editions of the California Electrical Code (CEC), California Administrative Code (Title 24), California Building Code (CBC), California Administrative Code (Title 22) and other applicable codes.

B. Conform to requirements outlined in the latest edition of the Roseville Electric Specifications for Commercial Construction.

1.04 Record Drawings

A. Record drawings are required as a part of this work. At all times, the Contractor shall maintain accurate information of the work in progress. Deviation in layout of conduit or other materials shall be recorded to the satisfaction of the Inspector. Upon completion of the project, as-builts shall be submitted to the City on reproducible plan sheets and shall depict all changes in a neat and legible manner.

FOR COUNCIL APPROVAL ONLY

PART 2 - PRODUCTS

2.01 Service Panels

A. Service panels shall meet the Roseville Electric approved sections of the EUSERC requirements. The list of acceptable panels can be found at https://the.euserc.org/s/Roseville-City-of-Acceptability-Pages.pdf
B. Service panel shall be:
   1. Built to UL508A standards
   2. Metered
   3. Single phase or three phase application
   4. Rated for 120 to 480 volts
   5. Color: Hunter Green

2.02 Electronic Astronomic Time Switch

A. Electronic Astronomic Time Switch shall be DWZ Model series, as manufactured by Tork, or accepted equal.

2.03 Conduit and Fittings

A. For primaries (12,000 volts), conform to Roseville Electric's Specifications for Commercial Construction, latest edition.
B. All other conduit and fittings shall conform to the California Electric Code, latest edition.

2.04 Wires and Cables

A. Conform to the California Electric Code, latest edition.
B. All wires shall be copper only, 90-degree-C THHN/THWN insulation.

2.05 Wire Connections and Devices

A. Conform to the California Electric Code, latest edition.
B. Splices and joints for #10 AWG or smaller wiring shall be twisted together electrically and mechanically strong and insulated with approved type insulated electrical spring connectors, Scotchlok or Ideal. Joints and connections for #8 AWG or larger shall be made with Burndy, T & B, or approved equal, solderless tool applied pressure lugs and connectors. Uninsulated lugs and wire ends shall be insulated with layers of plastic tape equal to insulation of wire and with all irregular surfaces properly padded with "Scotchfil" putty prior to application of tape. Tape shall be equal to Scotch #33, General Electric #AW-1, or approved equal. Feeder splicing is not permitted.
C. Receptacles: 15 & 20 Amp 125 Volt receptacles shall be "Specification" grade, duplex, UL Listed, rated Weatherproof where installed outdoors or in damp or wet locations. Where only one receptacle is connected to a 20 ampere circuit, a 20 ampere receptacle shall be used. Receptacles to be Hubbell 5262 series,

FOR COUNCIL APPROVAL ONLY

5362 series, or equal. Provide an equipment grounding jumper (pigtail) connecting the grounding terminal of the receptacle to the grounded box.

2.06 Outlet Boxes

A. Cast Metal boxes shall be cadmium plated, cast iron alloy by Crouse-Hinds Form 8 condulets, Appleton Form 35 Unilets or accepted equal.
B. Cast Metal Outlet boxes shall be four inch (4") round, galvanized cast iron alloy with threaded hubs and mounting lugs as required. Boxes shall be furnished with cast cover plates of the same material as the box and neoprene gaskets by Crouse-Hinds VXF series, Appleton JBX series or accepted equal.

2.07 Pull and Junction Boxes

A. Per City of Roseville Electric Department's Specifications for Commercial Construction, latest edition.

2.08 Parts Identification

A. Consistent with the City of Roseville Electric Department's Specifications for Commercial Construction, latest edition.

2.09 Electrical Support Equipment

A. Concrete Fasteners shall be Philips "Red-Head" or accepted equal. Powder driven concrete pin fasteners, low velocity type shall be Remington, Ramset or accepted equal.
B. Conduit Straps shall be hot dipped galvanized, cast malleable iron, one hole type strap with cast clamp-backs and spacers (as required) by O-Z/Gedney No. 15-50G strap and #14G spacer, Efcor No. 231 strap and No.131 spacer or accepted equal.
C. Concrete Inserts shall be pressed galvanized steel, spot insert with oval slot capable of accepting support nuts of ¼ inch to ½ inch diameter thread by Unistrut No. M2506 series, Globestrut CSI series or accepted equal.
D. Construction Channel shall be 1-1/2 inch by 1-1/2 inch 12 gauge galvanized steel channel with 17/32 inch diameter bolt holes, 1-1/2 inch on center, in the base of the channel by Kindorf 905 series, Unistrut P-1000-HS or accepted equal.
E. Cable Ties and Clamps shall be one piece, nylon, reusable type lashing tiesby Thomas and Betts Co "Ty-Raps", Panduit "Pan-Ty" or accepted equal.
F. General Fasteners shall be wood screws for fastening to work; machine screws for fastening to steel; toggle bolts for fastening to gypsum board or plaster walls; expansion anchors for attachments to pre-poured concrete.
G. GFI Outlet Cover shall be metal, lockable, and flush with the surface it is installed in. Cover must conform to the California Electric Code, latest edition.

FOR COUNCIL APPROVAL ONLY

2.10 Fixtures and Poles

A. Pathway/Security lights shall be:
   1. LED: Hadco: RL54 B B N N 1 A W N N N A 2 N N N N SP1
   2. Pod: die-cast aluminum housing with tool-less access
   3. Globe: clear prismatic injection molded U.V. stabilized acrylic
   4. Symmetric photometric distribution
   5. Rated 120 volts
B. Poles shall be:
   1. Whatley: TR34 16 DE BLK TXT 30-30 or accepted equal
   2. Fiberglass, direct burial
   3. Textured round, tapered
   4. 16’ mounting height
   5. Include –RC receptacle on select poles only, as shown on plans

2.11 Tracer Wire

A. Insulated solid copper wire, minimum #12 gauge.

PART 3 - EXECUTION

3.01 Installation

A. Install (luminaire and poles) in accordance to manufacturer’s instructions.
B. Ensure proper handling and installation of fixtures including hardware necessary for a complete installation. Fixtures (luminaire and poles) shall be clean, plumb and level.
C. All lamps shall be new and in operating condition. New lamps shall have less than 100 hours of operation on-site.
D. All splices in exterior fixtures or fixture outlet boxes shall be made watertight, using specified epoxy resin splicing kits.
E. Operate the entire system, once complete, in the presence of the Inspector. Immediately correct any improper connections or other items.
F. Install concrete collars around light poles. Concrete collars shall be per the Parks Construction Standards, latest edition.
G. Install tracer wire on top of conduit for all up-lighting and sports field lighting.

3.02 Clean Up

A. At all times, maintain a safe and clean work site, free of debris and rubbish.
B. All electrical parts shall be clean of conductive and deleterious materials.
C. All enclosures shall be free of dirt and debris.
D. Clean all finishes and touch up damaged areas prior to pre-final inspection.

3.03 Excavation & Backfill

FOR COUNCIL APPROVAL ONLY

A. Refer to Section 33 00 00 Utilities.

3.04 Equipment Pads

A. Concrete reinforced pads for mounting of equipment (i.e. switchboard, transformers, freestanding panels, etc.) shall be minimum 3000psi, 6" thick with #4 rebar at 12" on center each way. Rebar shall be centered in pad. Pad shall extend 2" beyond equipment and 1.5" above surrounding area. Backfill and compact to 95% maximum dry density at optimum moisture content in layers not to exceed 6" when compacted.

3.05 Grounding

A. Grounding and ground bonding of the electrical installation shall be in accordance with CEC Article 250, and any applicable codes. Ground fittings shall be approved manufactured type, installed and connected to conform with Code requirements.

B. Neutral conductors and noncurrent-carrying parts of equipment at each installation shall be grounded in accordance with applicable code. Ground conductor shall be copper having a current capacity sized in accordance with CEC.

C. All equipment cases, motor frames, etc., shall be completely grounded to satisfy requirements of CEC. Install bond wire in flexible conduit. Install copper bond wire, sized in accordance with CEC, in all nonmetallic raceways and bond to all metallic parts using approved fittings.

D. Service ground conductor shall be connected to a "Ufer" encased ground and bonded to the metallic cold water pipe system and to the metallic natural gas line. 5/8” x 10 ft copper clad ground rods may be used in lieu of the Ufer ground where no footing is available.

E. All connections shall be made with solderless connectors or molded fusion-welding process.

F. Equipment grounding conductors shall be insulated with a continuous green outer finish along its entire length. Conductors size #4 AWG and larger may be identified (with green electrical tape applied half-lapped) at each end and at every point where the conductor is accessible. Tape shall be applied from its point of entry to point of exit or termination.

G. Insulated grounded (neutral) conductors shall be identified with a continuous white outer finish along its entire length. Neutral conductors #4 AWG or larger can be identified by a distinctive white marking (applied half-lapped with white electrical tape) for the last 12 inches at each end.

3.06 Field Testing

FOR COUNCIL APPROVAL ONLY

A. Perform Insulation Resistance (IR) "Megger" Testing per NETA Standards. Submit test results. Provide testing for:
   1. All feeders 100 Amps and higher.
   2. Branch circuits 100 Amps and higher.
B. Each ground rod shall be tested. A ground rod which does not have a resistance to ground of 25 ohms or less shall be augmented by one additional ground rod at no less than 8 feet from each other.

3.07 Consultant to complete.

END OF SECTION

FOR COUNCIL APPROVAL ONLY

SECTION 31 10 00
CLEARING AND GRUBBING

PART 1 - GENERAL

1.01 General Requirements

A. The requirements set forth in the General Conditions shall be in addition to the standards provided herein.

B. The requirements set forth in the Supplemental Conditions shall be in addition to the standards provided herein.

1.02 Description

A. Preserve and protect existing site amenities to remain, including, but not limited to, trees, shrubs, underground utilities and other improvements as shown on the Plans. Protection of work shall include affected improvements on adjoining properties.

B. Scope of work includes: site preparation, removal of debris, staging of equipment and materials and securing the site for construction.

1.03 Related Work

A. Section 31 20 00: Earthwork

B. Section 01 57 23: Storm Water Pollution Control

1.04 Protection/Replacement

A. Prior to demolition, erect protective fencing a minimum of one foot (1') beyond the canopy of all trees to remain. The radius of the canopy shall be measured from the longest branch furthest from the trunk. Refer to the environmental document for additional requirements for protective fencing on other existing natural features. For work within or near protected trees, a tree permit may be required.

B. If public use is to be maintained on unaffected portions of the project site, the Contractor shall be responsible for directing pedestrian and vehicular traffic safely around the construction zone. Utilization of temporary fencing, barricades, signage, etc. shall be the responsibility of the Contractor. Safe detours shall be available to the general public at all times during the course of construction.

C. Protection of existing site improvements shown to remain, including, but not limited to, fencing, signs, benches, picnic tables, play structures, shade structures, drinking fountains, concrete paving, concrete wall and curbs,

FOR COUNCIL APPROVAL ONLY

decomposed granite paving, asphalt concrete paving, recreational site improvements, etc. are to be protected and preserved.

D. The Contractor shall be responsible for any damage to and maintenance of all existing street improvements, drainage facilities and irrigation systems and to re-establish these improvements to their original condition as soon as possible after completion of the work in the area, to the complete satisfaction of the Project Manager and Inspector. Realignments or modifications to the existing facilities as shown on the plans are accepted.
E. Survey monuments and markers either shown on the Plans or encountered during the course of construction shall be protected and preserved. The Contractor shall notify the Inspector upon discovery of an unmarked monument, at which time, arrangements for the relocation or adjustment of the monument will be determined. All costs associated with the relocation or adjustment of these monuments shall be the Contractor's responsibility.
F. Burning or burying removed material on-site is prohibited.
G. Where the removal of specific material creates an open hole, pit, trench or other depression, the Contractor shall immediately backfill and compact the areas consistent with requirements outlined in Section 31 20 00 of these Specifications.
H. All items identified in the Plans to remain or identified in the field to remain, removed in error by the Contractor, shall be repaired or replaced to match in equal or better construction, at no cost to the City. The quality of the repair or replacement shall be measured as that existing at contract award.

PART 2 - PRODUCTS

Intentionally left blank.

PART 3 - EXECUTION

3.01 Pre-Construction Site Review

A. Contractor shall review existing site conditions with the Inspector prior to start of construction and document any conditions which adversely affect the satisfactory execution of the work and final acceptance of the project.
B. Commencement of work constitutes acceptance of existing conditions. The Contractor shall, at his expense, be responsible for correcting all unsatisfactory and defective work.

3.02 Clearing

A. Completely remove trees, shrubs, stumps, vines, rubbish/debris, undergrowth, deadwood, structures, and other elements identified to be removed and/or which interfere with the construction as shown on the Plans and as specified.

FOR COUNCIL APPROVAL ONLY

B. Obtain verification from the Project Manager for non-identified items scheduled to be removed prior to actual removal.

3.03 Grubbing

A. Remove all stumps, roots, grasses and weeds in its entirety. Apply systemic weed killer. Confirm weed kill prior to removal.

B. For projects with native soils, once surface material is removed, the Contractor shall stockpile the top twelve inches (12”) of topsoil for use during the final grading phase of work. This soil shall be free of rocks, debris, roots and other undesirable material.

3.04 Utilities

A. Contact USA North 811 at (800) 642-2444, or submit an online ticket at USANorth811.org, prior to commencement of any demolition or excavation work. Provide a minimum of 48 hours’ notice. Verify all utilities entering into and their locations within the project site.

B. Where utilities lie within the project site, but are not a part of the project, the Contractor shall cooperate with the agency or utility company having jurisdiction to maintain its use and the integrity of the structure.

C. Where utilities enter into the project site and taps, connections to or extensions of the utility are identified in the Plans, the Contractor shall coordinate all work with the agency or utility company having jurisdiction to minimize or eliminate disruption of use by the adjacent properties.

D. Verify that all utilities, shown to be removed on the Plans, are inactive and turned off prior to disconnection and/or re-routing, prior to demolition.

3.05 Debris Removal

A. All materials removed as a part of this contract shall become the property of the Contractor and shall be legally disposed of off-site, unless otherwise noted on the Plans.

B. Where a portion of a concrete slab, curb or wall and asphalt concrete paving or curb is to be removed, the concrete shall be cut with a concrete saw at a 90 degree angle so that the edge of the remaining concrete shall form a neat, straight line. Conform to the City of Roseville Design and Construction Standards, latest edition.

END OF SECTION

FOR COUNCIL APPROVAL ONLY

FOR COUNCIL APPROVAL ONLY

SECTION 31 20 00
EARTHWORK

PART 1 - GENERAL

1.01 General Requirements

A. The requirements set forth in the General Conditions shall be in addition to the standards provided herein.
B. The requirements set forth in the Supplemental Conditions shall be in addition to the standards provided herein.
C. The standards set forth in the Caltrans Standard Specifications, latest edition, shall be in addition to the standards provided herein.
D. The requirements set forth by CAL OSHA shall be in addition to the standards provided herein.

1.02 Description

A. Provide all labor, operations and materials necessary for earthwork, including, but not limited to, staking and surveying, grading; excavating; installation of facilities necessary to perform excavation and subsequent removal of such facilities upon completion of work; subgrade preparation; backfilling; and other incidental items necessary for a complete project.
B. This project is a balanced cut and fill project.
C. The intent of the grading plan is to provide positive drainage and to maintain slopes on walkways as required by the Americans with Disabilities Act and California Title 24 throughout the project site. The Project Manager shall be notified immediately of any discrepancies between the Plans and actual field conditions and/or conflicts between the design and code requirements.

FOR COUNCIL APPROVAL ONLY

1.03 Related Work

A. Section 31 10 00: Clearing and Grubbing
B. Section 33 00 00: Utilities
C. Section 32 84 00: Irrigation System
D. Section 32 90 00: Planting
E. Section 26 00 00: Site Electrical
F. Section 01 57 23 Storm Water Pollution Control

1.04 Quality Assurance

A. All work shall conform to local codes and regulations, including standards set forth in the Standard Specifications of the State of California, Business and

Transportation Agency, Department of Transportation (Caltrans), Chapter 70 of the Uniform Building Code and ASTM.

B. Relative compaction shall be the in-place dry density of soil denoted as a percentage of the maximum dry density of the same material. This shall be as determined by ASTM 1557. The optimum moisture is measured by the water content which corresponds to the maximum dry density.
C. Upon discovery of unforeseen subsurface site conditions, the Contractor shall notify the Inspector immediately.
D. Upon discovery of hazardous materials, cease all activity and immediately contact the Fire Department.

1.05 Protection

A. Provide and install all supports, shoring, bracing, underpinning, sheet piling and other methods for the sides of excavations necessary for ensuring safe working conditions for the workmen and to protect adjacent improvements to remain.
B. Provide any and all protection measures necessary to ensure the protection of the workmen, the general public, including children and the project site. These protection requirements remain the Contractor's sole responsibility throughout the duration of the project, including non-working hours.
C. Do not obstruct vehicular, bicycle or pedestrian thoroughfares, unless previously accepted by the City. Provide safe and adequate detours around the construction as required by City and State regulations.
D. Trenches shall be covered at all times when work directly associated with the trenches is not occurring, including non-work hours.
E. During the course of construction, the Contractor shall ensure surface drainage does not create a nuisance onto adjacent properties.

1.06 Erosion Control Measures

A. Construction sites shall have required erosion and sediment control measures in place as required by the SWPPP. If construction is in progress, the Contractor shall ensure the construction site is prepared prior to the onset of any storm. At a minimum, erosion control measures shall include:
    1. Broadcast seed
    2. Drainage area protection
    3. Dust/mud control
    4. Drain inlet filters
    5. Silt fence and straw wattles
    6. Slope protection
    7. Straw bales
    8. Silt controlling devices

FOR COUNCIL APPROVAL ONLY

PART 2 - PRODUCTS

2.01 Base Rock

A. Class 2 aggregate base per Caltrans Standard Specifications, latest edition.

2.02 Drain Rock

A. Drain rock shall be Class 2 permeable, washed, unbroken stone or gravel. Material gradation shall conform to the following:

Sieve Size	Percent Passing
1 inch	100
No. 4	20-50
No. 50	0-10
No. 200	0-5

2.03 Pea Gravel

A. Pea gravel shall be natural stone, free of clay, shale or organic matter, and shall conform to the following:

Sieve Size	Percent Passing
3/8 inch	100
No. 4	47
No. 8	2
No. 16	1

2.04 Fill

A. Structural Fill shall conform to Caltrans Standard Specifications or the accepted site-specific geotechnical report generated for the project.

B. Fill for non-structural areas shall conform to the following standards:
   1. Plasticity: ASTM D4318-84
   2. Expansion Index: No greater than twenty (20)
   3. Testing: UBC 29-9 and ASTM D422-72
   4. Particle Size: No greater than one inch (1”)

2.05 Topsoil

A. The top eight to ten inches (8” – 10”) of native soil containing more than three percent (3%) organic material. Topsoil shall be free of rocks no larger than one inch (1”) in diameter, free from subsoil, roots, heavy or stiff clay, course sand, destructive seeds, noxious chemicals, brush, debris, litter and other undesirable materials.

B. For any import soil to be used in turf/planting areas, submit a soils analysis with soil amendment recommendations (for plant growth) for review and acceptance prior to placement on-site. Soils test information shall be as outlined in Section 32 90 00: Planting – 1.06.

FOR COUNCIL APPROVAL ONLY

2.06 Soil Sterilant

A. Sterilizer shall be standard, quick-acting, short-lived and non-selective weed and grass killer, commonly used under roadway/transportation projects. Application of the sterilant shall pose no short or long term health threats to the installer or the general public. Submit analysis for approval prior to applying.

2.07 Sand

A. Granular, fine, free of organic matter, mica, loam or clay material.

PART 3 - EXECUTION

3.01 Construction Staking

A. The layout of all work shall be performed by a California State licensed land surveyor provided by the Contractor.
B. Notify the Inspector immediately of any discrepancies between actual field conditions and the Plans. Minor field adjustments may be necessary in order to fulfill the intent of the Plans.
C. Non-notification of discrepancies between actual field conditions and the Plans by the Contractor, in writing, shall indicate his acceptance of such field conditions. Adjustments/modifications to the construction to accommodate the inconsistencies (without notification) shall be at no additional cost to the City.

3.02 Excavation

A. All excavations shall be as noted on the Plans. Excavations shall include accommodation of base material.
B. Do not over-excavate. Excavations shall provide appropriate space to install shoring, bracing, formwork, etc., as needed to ensure the safe and proper construction of the work.
C. Take every precaution to prevent water from entering, softening, and undercutting excavated areas, including, pits, footings, trenches, etc.
D. Notify the Inspector immediately upon discovery of unsatisfactory soils materials or unforeseen site conditions. Excavation shall include the complete removal of the unsatisfactory material and its legal disposal thereof.

3.03 Site Grading

A. A grading permit is required to be obtained by the Contractor prior to commencing any earthwork.
B. Grading shall include adjacent transition areas, new elevations/contours as shown on the Plans. All subgrade areas shall be graded parallel to the finish grades and contours and shall be uniform in slope. Transition areas shall provide a smooth connection between new and existing grades and shall not create additional drainage or ponding onto adjoining properties.

FOR COUNCIL APPROVAL ONLY

C. Surface grades shall provide for positive drainage away from structures and footings, and shall be uniformly smooth throughout.
D. Rough grading shall:
   1. Be graded to a tolerance of 0.10 feet, plus or minus for planted and turf areas.
   2. Be graded with a tolerance less than .04' from specified grade and cross section for subgrade in which pavement, curbs and other structural elements are to be placed immediately above.
   3. Provide a subgrade surface free of exposed rocks, stones and boulders.
   4. Provide a subgrade surface free of depressions, pits, etc., with proper backfill and compaction. See paragraph 3.04 below.

3.04 Placement of Fill Material

A. Prior to placement of fill material, the Contractor shall:
   1. Obtain approval of the subgrade surface from the Inspector.
   2. Scarify, dry and compact soft and/or wet areas.
   3. Remove and replace unsuitable subgrade material to the satisfaction of the Inspector.
   4. Take all necessary corrective action.
B. Do not use topsoil as fill or backfill material, unless otherwise accepted in writing.
C. Fill shall be placed in the following manner:
   1. Accepted engineered fill material for structural slabs and areas to be paved shall be placed in six-inch (6") loose thickness, uniform layers over the entire area.
   2. Fill material in planted areas shall be placed in twenty-four inch (24") maximum loose thickness throughout the areas to receive fill.
D. Aerate or water each lift to obtain the required compaction rate indicated on the Plans. Thoroughly mix material to ensure proper moisture content for compaction. Repeat the operations until grades, as shown on the Plans, are obtained. Jetting of trenches shall be reviewed and accepted by the Inspector prior to performance of work.
E. Do not place fill when the subgrade is frozen, muddy or wet. Allow conditions to thaw and dry out before resuming operations.
F. Use hand tampers or vibrating compactors around foundations walls, retaining walls and other structural elements. Do not use large equipment in these areas and do not begin compaction operations until the bearing surfaces have reached its design strength.
G. Fill around existing trees to remain shall not exceed twelve inches (12").
   1. Minor fill (6" or less) shall utilize topsoil and shall be placed by hand. Do not cover crown of trunk. Feather grades to the extent possible.

FOR COUNCIL APPROVAL ONLY

2. Fills between 6” and 12” shall utilize 3/4” pea gravel on grade, placed up to three inches (3”) below finish grade. Apply topsoil, by hand, to meet finish grade elevations. Feather grades to the extent possible.

H. Construct mounds from on-site material. The core of the mound (1’ below finish elevations) shall be compacted to 90%. The top twelve inches (12”) shall be compacted to 85%. Place topsoil in the top twelve inches (12”).

I. Place topsoil in all turf and planting areas a minimum of twelve (12) inches deep. See Section 31 10 00, 3.03-B: Clearing and Grubbing.

3.05 Trenching, Backfilling and Compacting

A. For trenches greater than five feet (5’) in depth, submit an OSHA permit related to the work.

B. All trenches shall be straight, true and cut vertical at 90 degrees to the surface plane.

C. For trenches through existing paved surfaces, use a concrete saw or other tool to achieve straight, clean lines. Replace paved surface to the same or better condition as existing prior to cut.

D. Do not over-excavate. Maintain bearing surfaces true, level and undisturbed to the extent possible.

E. Trenches shall be kept dry and frost-free. Do not allow standing water to collect.

F. Do not allow trenches to remain exposed at any time when work directly related is not occurring. Cover all trenches during non-work hours.

G. Bedding for all trenches to receive pipes shall be as follows:

1. Bedding material shall be consistent with the City of Roseville Design and Construction Standards, latest edition.
2. Pipe shall lie completely on bedding. Pipe fittings or joints shall not bear weight.
3. Bedding shall be uniform throughout the length of pipe.

H. Initial backfill for storm drains, sewer lines and electrical conduit shall conform to the applicable City standard set forth by the Department having jurisdiction.

I. Backfill beyond the initial operations shall be native soil, placed in twelve-inch (12”) lifts. Compaction for trenched areas shall be 95% for parking lot, driveway and roadway areas; 90% for hardscape (i.e. walkways, picnic pads basketball and tennis courts); and 85% in areas to be planted. Place topsoil over trenches in planted areas. Upon completion, all trenches shall be filled flush with adjacent finish grades.

J. Compaction tests shall be required for trenched areas, hardscape areas and areas where fill over two feet in depth will be placed. The Inspector shall determine the number of tests and the locations. Re-tests shall be the Contractor’s responsibility.

FOR COUNCIL APPROVAL ONLY

K. Potholing shall be required in areas where existing utilities are indicated. Hand digging may be required.

3.06 Soil Sterilant

A. Soil sterilant shall be applied to areas where paving is to be installed. The worker applying the sterilant shall take every precaution to avoid overspray of sterilant onto areas to be planted. The sterilant shall be placed no further than six inches (6”) beyond the edge of pavement.
B. Soil sterilant shall not be applied in inclement weather and windy days.

3.07 Drainage Areas

A. All bare areas, regardless of slope, within 50 feet of natural drainages shall be covered with straw and pressed in place.
B. No grading or trenching, except as required for erosion or sediment control, shall occur within 35 feet from the centerline of perennial and intermittent drainage swales between October 5 and April 1 unless approved by the Engineering Division, as well as any other governmental agency which may have additional jurisdiction and/or requirements.

3.08 Dust/Mud Control

A. Adjacent Streets: Adjacent street frontages shall be swept at least once a day to remove silt and other dirt which is evident from construction activities.
B. Construction Vehicles: The Contractor is responsible for cleaning construction vehicles leaving the site on a daily basis to prevent dust, silt, mud and dirt from being released or tracked offsite. Adjacent streets shall be swept clean daily.
C. Grading Spoils: Dry stockpiles of soil shall be watered to prevent the generation of airborne dust. Trucks transporting dry soil shall be covered with tarpaulins.
D. Water: Water shall be sprayed on all exposed earth surfaces during clearing, grading, earth moving and other site preparation activities. The exposed earth shall be watered throughout the day to minimize dust. The Contractor shall obtain a hydrant permit from the Environmental Utilities Department.
E. Wind Allowances: Grading activities shall be restricted or halted when winds exceed 15 miles per hour as deemed necessary by the Public Works Inspector.

END OF SECTION

FOR COUNCIL APPROVAL ONLY

FOR COUNCIL APPROVAL ONLY

SECTION 32 12 16
ASPHALT CONCRETE PAVING

PART 1 - GENERAL

1.01 General Requirements

A. The requirements set forth in the General Conditions shall be in addition to the standards provided herein.

B. The requirements set forth in the Supplemental Conditions shall be in addition to the standards provided herein.

C. The standards set forth in the City of Roseville Design and Construction Standards and the City of Roseville Parks Construction Standards, latest editions, shall be in addition to the standards provided herein.

D. The standards set forth in the State of California, Title 24, Americans with Disabilities Act, latest edition, shall be in addition to the standards provided herein.

1.02 Description

A. Furnish all labor, materials and equipment for the complete installation of asphalt concrete paving, including international disabled signs as shown in the City Standard, as shown on the Plans and as specified herein.

1.03 References

A. Caltrans Standard Specifications for asphaltic concrete, latest edition.

1.04 Tolerances

A. All surface areas shall drain. Ponding, puddling or birdbaths are not acceptable.

B. Surface grades shall conform to the following:

Description	shall not exceed, ... from indicated line, grade or thickness
Base Course	0.1 foot +/-
Finish Surface	0.05 foot +/-
Thickness of finished pavement	0.01 foot less

C. Flatness: maximum variance of 1/8” as measured with a ten (10) foot straight edge.

1.05 Testing

A. Testing shall occur during the installation of pavement. The number and frequency of tests shall be as determined by the Inspector.

FOR COUNCIL APPROVAL ONLY

PART 2 - PRODUCTS

2.01 Aggregate Base

A. Conform to Caltrans Standard Specification, Section 26 paragraph 1.02B, Class 2.

2.02 Asphalt Concrete

A. Conform to Caltrans Standard Specification, Section 39 and the City of Roseville Design and Construction Standards, latest edition.

2.03 Soil Sterilant

A. Sterilizer shall be standard, quick-acting, short-lived and non-selective weed and grass killer, commonly used under roadway/transportation projects. Application of the sterilant shall pose no short or long term health threats to the installer or the general public. Submit analysis for approval prior to applying.

2.04 Striping

A. Traffic marker paint, in accordance with Caltrans Standard Specifications, Section 83-3.02.

B. Thermoplastic marking tape in accordance with Caltrans Standard Specifications, Section 84-2.02. (Required for bike trails)

2.05 Header

A. Per City of Roseville Parks Construction Standards, latest edition.

PART 3 - EXECUTION

3.01 Preparation

A. Upon completion of grading operations, compact the subgrade at the required elevation to a relative compaction density of 95%, unless otherwise noted on the Plans. A load or performance test shall be conducted in the presence of the Inspector prior to the placement of AC.

B. Apply soil sterilant per manufacturer's directions. Limit the work zone of the sterilant application to the area to receive paving plus three feet (3') on each side.

C. Completely install redwood header as shown in the City of Roseville Parks Construction Standards, latest edition, if shown on the Plans.

D. No material shall be placed in muddy conditions, nor shall any material be placed during or immediately after inclement weather, i.e. rain storms, temperatures below 35 degrees F, etc.

E. In areas where soil conditions are less than optimal, geotechnical tests shall be performed to verify compaction rates. The Inspector shall determine the

FOR COUNCIL APPROVAL ONLY

number of tests necessary in order to verify conditions. Initial tests will be provided by the City. Re-tests shall be the Contractor's responsibility.

3.02 Installation

A. Spread aggregate base material in six-inch (6") lifts.
B. Compact base surface to a relative compaction of 95% and in accordance to the Caltrans Standard Specifications, Section 26.
C. Spread asphalt concrete material in accordance to the Caltrans Standard Specifications, Section 39.
D. Upon completion, apply water to the finished surface and allow water to run-off. All areas of ponding, puddling or birdbaths shall be filled with asphalt and fine aggregate. Conform fill surface with adjacent surface to the point edges are not visible.
E. Take every precaution to protect adjacent amenities or structures from material spillage or damage. In case of spillage or damage, the Contractor shall immediately repair or replace the damaged area to the satisfaction of the City.
F. Clean and oil all manhole covers, grates and other surface structures within the pavement area.
G. Clean all surface structures that lie within the asphalt concrete area.

3.03 Striping

A. Conform to the City of Roseville Design and Construction Standards, latest edition.
B. Ensure that all pavement to receive striping is completely cured. Clean all pavement surfaces.
C. Accurately lay out all pavement markings, including, parking stripes, centerline stripes, international disabled parking logo, striping for disabled access ramp, directional arrows, game court lines and other pavement markings as shown on the Plans or as required by code.
D. All pavement lines, striping and lettering shall be four inches (4") in width, unless otherwise indicated on the Plans.
E. Lines painted with traffic paint shall receive two coats of paint. Allow each coat to dry completely prior to applying the second coat.
F. Apply all pavement markings on clean, dry surfaces, during weather conditions where temperatures are higher than 35 degrees F, no rain is occurring or predicted within the next twenty-four (24) hours, and the humidity is less than 80.
G. Remove all excess adhesives and tracking onto unmarked areas.
H. All pavement striping applications shall conform to Caltrans Standard Specifications, Sections 84 and 85.

FOR COUNCIL APPROVAL ONLY

3.04 Protection and Cleaning

A. Do not allow equipment or vehicles to park on new asphalt surfaces upon completion operations. At his discretion, the Contractor may allow the parking of equipment and vehicles on the asphalt concrete **AFTER** the asphalt concrete material has been laid, passing applicable compaction tests and **PRIOR TO** applications of striping.

END OF SECTION

FOR COUNCIL APPROVAL ONLY

SECTION 32 15 40
DECOMPOSED GRANITE PAVING

PART 1 - GENERAL

1.01 General Requirements

A. The requirements set forth in the General Conditions shall be in addition to the standards provided herein.

B. The requirements set forth in the Supplemental Conditions shall be in addition to the standards provided herein.

C. The standards set forth in the City of Roseville Design and Construction Standards and the City of Roseville Parks Construction Standards, latest editions, shall be in addition to the standards provided herein.

1.02 Description

A. Furnish all labor, materials and equipment for the complete installation of decomposed granite paving, including redwood headers as shown in the Plans and as specified herein.

1.03 References

A. Caltrans Standard Specifications, latest edition.

1.04 Submittals

A. Submittals for specified items are not required; however, submittals are required for any proposed substitutions or deviations from the Plans or Specifications. Additionally, submittals are required for the specific items listed below. The Contractor shall submit a materials summary sheet indicating which items will be installed as specified and which items are proposed for substitutions. The Contractor shall submit proof of order within ten (10) working days of the Notice to Proceed, indicating all specified materials have been ordered, noting “as specified” or “substitution proposed”. Submittals are required on the following items:

1. Decomposed granite material and binding material: provide a sample “brick” for review and approval.

PART 2 - PRODUCTS

2.01 Crushed Quarry Rock

A. Crushed rock, graded between #4 and #200. Rock shall be high quality and well-graded.

FOR COUNCIL APPROVAL ONLY

B. Hastie's Capitol Sand and Gravel, Roseville, CA (916) 989-4600 or accepted equal.

2.02 Header

A. 1"x6"or 2"x6" Redwood header board.

2.03 Binding Material

A. PolyPavement, Los Angeles, CA (323) 954-2240 or accepted equal.

PART 3 - EXECUTION

3.01 Preparation

A. Upon completion of grading operations, compact the subgrade at the required elevation to a relative compaction density of 95%, unless otherwise noted on the Plans.
B. Completely install redwood header as shown in the City of Roseville Parks Construction Standards.
C. No material shall be placed in muddy conditions, nor shall any material be placed during or immediately after inclement weather, i.e. rain storms, etc.

3.02 Installation

A. Provide a 10' by specified width test sample, to be approved prior to installation. This sample shall be the basis of overall approval.
B. Thoroughly combine binder per manufacturer recommendations.
C. Spread crushed granite fine/binder material in two (2) one and one half inch (1-1/2") lifts (thickness after compaction).
D. Wet and roll each lift to form a uniform, smooth surface with a cross slope of 2%. Compact each lift to a 95% relative compaction density.
E. Upon completion of the final lift, fill any depressions, holes or divots and re- roll using the above process.
F. Provide a Certificate of Compliance verifying the binder/stabilizer has been mixed per manufacturer's recommendations.

3.03 Clean Up and Protection

A. Thoroughly clean all areas where work has occurred. Remove from site excess material, debris and rubbish.
B. Take all precautions to protect completed work. Immediately repair or replace all damaged areas due to tire ruts, erosion, compaction failure, etc.

END OF SECTION

FOR COUNCIL APPROVAL ONLY

SECTION 32 31 13
CHAIN LINK FENCING

PART 1 - GENERAL

1.01 General Requirements

A. The requirements set forth in the General Conditions shall be in addition to the standards provided herein.

B. The requirements set forth in the Special Conditions shall be in addition to the standards provided herein.

1.02 Description

A. Furnish all labor, materials and equipment for the complete installation of the chain link fence system, including gates as shown on the Plans and as specified herein.

1.03 References

A. Caltrans Standard Specifications, latest edition.

PART 2 - PRODUCTS

2.01 General

A. Wire used in the fabric shall be galvanized and shall have a tensile strength of 80,000 lbs. per square inch based on cross sectional areas of the wire. One sample shall be tested without removing bends caused by weaving of the wire with the mesh. A second test shall be conducted on a wire strand carefully straightened. The tensile strength is finally determined as the average reading between the two tests. Wire to match fabric selection.

B. Fabric shall be 1-3/4" 9-gauge nominal wire mesh, *hot-dipped galvanized or black vinyl coated* after weaving as shown on the plans. Conform to ASTM A392, with tensile strength as described in 2.01A above. Fabric shall be knuckled top and bottom with single width to full height of fence.

C. Ties/Fasteners shall be 9-gauge aluminum or black powder coated wire.

D. Fittings, clips, bolts, bands, bars, post tops/covers and other hardware necessary for a complete fence system shall be *galvanized or black powder coated*.

E. Where fencing is shown on the Plans to be black vinyl or powder coated, all appurtenances, including fabric, posts, rails, clips, bands, fittings, etc., necessary for a complete fence system shall be black vinyl or powder coated. Vinyl or powder coating shall be the industry standard for this type of finish.

FOR COUNCIL APPROVAL ONLY

2.02 Posts and Rails

A. Posts and rails shall be *hot-dipped galvanized per ASTM A53 or black powder coated*, to match fabric and as shown on the Plans. All posts shall be installed with moisture-proofed caps on the top.
B. Size and lengths of posts shall be as shown in the City of Roseville Design and Construction Standards PK-40, latest edition.

2.03 Gates

A. Fabric and finish to match fence.
B. Hinges and latches shall be industrial strength, heavy duty and shall fit snugly around post. Latches shall be lockable.
C. Size and lengths of posts shall be as shown in the City of Roseville Parks Standard Details, latest edition.

PART 3 - EXECUTION

3.01 Post Installation

A. Posts are to be spaced evenly as shown on the City Standard and set plumb and true to lines with the top line uniform as shown in the City of Roseville Design and Construction Standards PK-40, latest edition.
B. All posts shall be set in concrete as shown in the City of Roseville Design and Construction Standards PK-40, latest edition.
C. Where nicks on vinyl or powder coated finished occurs due to installation, the Contractor shall re-finish and patch damaged areas immediately.

3.02 Fabric

A. Attach fabric using fabric bands or clips spaced approximately 14” apart. Connections to top rails and tension wires shall utilize wire ties placed 24” on center.
B. For corner and vertical end connections, install stretcher bars banded to posts and gate frames at 24” apart (maximum).
C. All fabric to be stretched tight, free from sags and bulges.

3.03 Rails

A. For splices along the top rail, provide couplings every 20’. The coupling shall produce a continuous brace from end to end of each stretch of fence. Install a heavy spring at every fifth coupling to allow for expansion or contraction.
B. Utilize the appropriate fittings to ensure that all rails are rigidly clamped to end and corner posts.
C. Clamp mid and bottom rails at each post.

FOR COUNCIL APPROVAL ONLY

3.04 Gates

A. Gates shall be installed consistent with the City Standard detail. Verify grade conditions along the fence bottom to ensure proper use of the gate(s).
B. Gate openings shall be face-to-face dimensions and shall swing according to the Plans.

3.05 Cleaning

A. Thoroughly clean all areas where work has occurred. Remove from the site excess material, debris and rubbish.
B. Take all precautions to protect completed work. Immediately repair or replace all damaged areas due to tire ruts, erosion, compaction failure, etc. Keep all erosion control measures intact.

END OF SECTION

FOR COUNCIL APPROVAL ONLY

FOR COUNCIL APPROVAL ONLY

FOR COUNCIL APPROVAL ONLY

FOR COUNCIL APPROVAL ONLY

SECTION 32 84 00
IRRIGATION SYSTEM

PART 1 - GENERAL

1.01 General Requirements

A. The requirements set forth in the General Conditions shall be in addition to the standards provided herein.

B. The requirements set forth in the Supplemental Conditions shall be in addition to the standards provided herein.

1.02 Description

A. Furnish all labor, materials and equipment for the complete installation of an automated irrigation system, including all necessary appurtenances for proper operation, noted or implied, as shown on the Plans and as specified herein.

B. Water usage, meter costs, connection fees, testing and other associated utility costs are considered direct costs and is the responsibility of the Contractor until the project is accepted.

C. Installation of the water meter shall be by the City.

1.03 Related Work

A. Section 32 90 00: Planting

B. Section 26 00 00: Site Electrical

1.04 Quality Assurance

A. All work shall comply with local and state laws, codes, regulations and requirements which govern any portion or all of the work contained in this Section. These include, but are not limited to, the latest editions of:

1. City of Roseville Park Construction Standards,
2. City of Roseville Design and Construction Standards,
3. City of Roseville Electric Department Standard Specifications,
4. Local, state and federal electrical codes, manuals and guidelines, and
5. Local, state and federal plumbing codes, manuals and guidelines.

1.05 Submittals

A. Submittals for specified items are not required for Parks or Streetscape projects, unless specifically listed below. However, submittals are required for any proposed substitutions or deviations from the parks Plans or Specifications. For Streetscapes, no substitutions will be accepted. The Contractor shall submit a materials summary sheet indicating which items will be installed as specified

FOR COUNCIL APPROVAL ONLY

and which items are proposed for substitutions. The Contractor shall submit proof of order within ten (10) working days of the Notice to Proceed, indicating all specified materials have been ordered, noting “as specified” or “substitution proposed”. Submittals are required on all irrigation items.

1.06 Explanation of Drawings

A. The drawings are diagrammatic and do not reflect all offsets, fittings and other miscellaneous items required for a complete and operable irrigation system. It shall be the Contractor’s responsibility to investigate all existing site conditions, become thoroughly familiar with the site, and provide all labor, materials and equipment required for the installation of the irrigation system.
B. Avoid conflicts between other trades and the installation of the irrigation system. Minor adjustments to avoid such conflicts shall be made in the field. Major discrepancies between actual field conditions and the Plans shall be brought to the attention of the Project Manager. The lack of notification shall indicate the Contractor assumes full responsibility for any revision deemed necessary to ensure proper installation.

1.07 Product Delivery, Handling and Storage

A. All materials shall be delivered bearing manufacturer’s label with size, type and model number (if applicable) clearly marked.
B. All pipe shall be delivered in a vehicle which allows the material to lie flat without concentrated weight or stress at any point.
C. Unload all materials with care so as to avoid damage. Store materials in a covered area and do not expose PVC pipe to extreme sun or heat. Store pipe lying flat.
D. Do not install any material that has been damaged. Replace all material found to be damaged.

1.08 Record Drawings

A. The Contractor shall keep an accurate record of the as-built conditions of the irrigation system. These records shall be updated daily and kept at the construction site. At any time, the Inspector may examine the conditions of the “as-builts” to ensure compliance of the above.
B. Dimensions shall be recorded from two (2) permanent points of reference.
C. The City may at its discretion withhold progress payments to the Contractor if the as-built records are not updated to the satisfaction of the City.

FOR COUNCIL APPROVAL ONLY

PART 2 - PRODUCTS

2.01 General

A. All materials specified shall be new, bearing the brand name, type, serial numbers and model number as shown on the Plans and as specified herein, unless otherwise accepted in writing.

2.02 Backfill Material

A. Backfill shall be clean, screened, on-site material, free from organic material, large clods of earth and/or rock larger than one (1) inch in diameter, trash, debris, rubbish, tree trunks, broken concrete or asphalt and other unacceptable material.

B. Material larger than one (1) inch shall be removed from site and legally disposed. All removal shall be the responsibility of the Contractor.

2.03 Booster Pump

A. Customflow Quality Booster Pump by V-Power Equipment, Inc. (888) 830-8025.

B. Provide technical startup support, pump certification and 30 month warranty following delivery by V-Power Equipment, Inc.

C. Variable Frequency Drive Control Panel with Fuji Eco Drive, NEMA 12 enclosure, main disconnect, DC choke, panel cooling fan, HOA switch on panel door, 110 volt transformer for controls and external fan, Terminals for wire connections, (2) Pump start relays for irrigation controller controls, ET/U.L. 508A Listed and proprietary programmed for City of Roseville standard operation by Custom Pump & Power, Inc.

D. IFM Efector PA3224 transducer is rated for 0-145PSI and adjustable through the VFD.

E. Enclosures to be sized to fit pump, VFD, valves, bypass, transducer, and pump inserted Hot Stop temperature protection to be activated at 120 degree with manual reset mounted on the VFD panel door. Flange connection for inlet and outlet outside the enclosure. Standard enclosure to be fitted for padlock and have a shock assisted opening on the front. Larger enclosures with removable doors with built in lock with the 402 key. All enclosures to be steel and powder coated dark green.

F. Installation by licensed contractor as shown on plans and connect power wires from meter pedestal and 24-volt control wire from the controller to the VFD line connectors inside the enclosure.

2.04 Pipe

A. PVC Pressurized Mainline

FOR COUNCIL APPROVAL ONLY

1. For lines three inch (3”) or larger: polyvinyl chloride (PVC) 1120-1220, SDR 21, Class 200 rubber gasketed pipe, and NSF accepted per Standard No. 14, Type I, Grade I. Conform to:

Material	ASTM
Pipe	D1784, D2241
Rubber Gasket	F477

2. For lines two and one half inches (2-1/2”) or smaller: Schedule 40 polyvinyl chloride (PVC) 1120-1220, and NSF accepted per Standard No. 14, Type I, Grade I. Conform to:

Material	ASTM
Pipe	D1784, D1785

B. PVC Non-Pressurized Lateral Lines
   1. Schedule 40 polyvinyl chloride (PVC) 1120-1220, SDR 21.0, NSF accepted per Standard No. 14, Type 1, Grade II.

C. Recycled Water
   1. Pipes shall meet the standards outlined in Sections 2.08, A and B above, unless otherwise noted in the City of Roseville Design and Construction Standards for recycled water, latest edition.
   2. All pipes containing recycled water shall be purple, NSF accepted and conform to the City of Roseville Design and Construction Standards, latest edition.

FOR COUNCIL APPROVAL ONLY

2.05 Fittings and Nipples

A. Fittings for Mainline Pipe:
   1. For all control valves on mainlines three inches (3”) and larger, use painted, ductile iron saddle taps with double stainless steel straps and nuts. Model #202 by Romac Industries, Inc. or accepted equal.
   2. For all other connections on mainlines three inches (3”) and larger mainline pipe, use glued schedule 80 fittings.
   3. For all control valves on mainlines two and one half inches (2-1/2”) or smaller, use glued schedule 80 fittings.
   4. For all other connections on mainlines two and one half inches (2-1/2”) or smaller, use glued schedule 40 fittings.

B. Fittings for Solvent Weld Pipe- Laterals:
   1. Schedule 40 polyvinyl chloride (PVC), standard weight, conforming to ASTM D2466-73.
   2. Weld-on #P-70 primer and Weld-on #711 gray glue or accepted equal.
   3. Teflon tape for all threaded PVC fittings.

C. Plastic Nipples shall be Schedule 80, Type 1, Grade 1, polyvinyl chloride (PVC), threaded at both ends, and conforming to ASTM D1784 -85. Nipples shall be uniformly gray.

D. Fittings for Recycled Pipe:
   1. Fittings shall meet the standards outlined in Sections 2.09, A, B and C above, unless otherwise noted in the City of Roseville Design and Construction Standards for recycled water, latest edition.

2.06 Swing Joints

A. Swings joints shall be as shown in the City Parks Construction Standard detail. Schedule 40 threaded PVC triple swing joints or an accepted equal.

2.07 Electric Remote Control Valve

A. Sizes as shown on the Plans. All valves shall be Rainbird PEB series or accepted equal and shall contain the following:
   1. a globe-type electric remote control, normally closed diaphragm type with slow opening and closing action,
   2. encapsulated solenoid type actuation,
   3. a minimum rating of twenty-four (24) volts,
   4. sixty (60) cycle,
   5. two to five (2-5) watts,
   6. a manual flow adjustment with shut-off provisions,
   7. provisions for an external “bleed” of the diaphragm chamber for manual operation.
   8. a ball valve on the inlet.
   9. Schedule 80 PVC threaded fittings from main line to valve.

B. Valve boxes shall be rectangular, rigid plastic valve boxes with lockable lids and extensions by Carson Industries, LLC or accepted equal. Valve box shall be sized appropriately to house entire valve assembly with space to accommodate maintenance access. Valves for drip zones require Jumbo size boxes.
   1. Boxes shall be colored green in potable applications, and purple for recycled water applications.
   2. Valve boxes used on recycled water systems shall be permanently colored purple through the manufacturer. Boxes painted purple will be rejected.
   3. Label lids using heat branded identification, T:Turf, S:Shrubs, B:Bubblers

C. Controller station identification number shall be standard yellow tags with permanent numbers by Christy or accepted equal.

2.08 Root Watering System

A. Provide pre-manufactured root watering system.
   1. Pressure compensating bubbler. See irrigation sheets for flow rates.
   2. Check valve where applicable to prevent low head drainage.
   3. Swing joint assembly

FOR COUNCIL APPROVAL ONLY

4. Locking grate top on semi-rigid mesh tube. Use purple grate for Recycled water systems
5. Filter fabric sleeve

2.09 Irrigation Heads

A. All irrigation heads shall conform to type, size, precipitation rate, gallons per minute discharge, pressure and throw radius as shown on the Plans, unless otherwise accepted in writing.
B. In all available models, all irrigation heads shall have stainless steel risers, unless otherwise approved in writing.
C. For recycled water applications, irrigation heads shall be colored purple, have debris pocket, and wiper seals with 3 touch points.
D. Irrigation heads shall have built-in pressure regulation for pop up sprays and/or water-efficient heads.
E. Include built-in check valve where applicable to prevent low head drainage.

2.10 Drip Irrigation

A. Sub-surface dripline.
   1. Flexible polyethylene tubing shall have factory-installed pressure-compensating, inline emitters spaced evenly per listed spacing.
   2. Emitter shall incorporate elemental or ionic copper root intrusion prevention technology, and shall be warranted by the manufacturer to be free of emitter plugging due to root intrusion for a period of fifteen (15) years minimum.
   3. Emitter shall have a built-in check valve that will hold back, at minimum, an 8.5' column of water.
   4. Dripline for use with recycled water systems shall be properly and permanently marked for non-potable use.
   5. Acceptable products include Rainbird XFS-CV Series or Netafim Techline HCVXR Series, or approved equal.
B. All fittings shall be constructed of injection molded, brown plastic having a nominal outside dimension of 17mm (0.56”). Female and male threaded ends shall be capable of mating to standard PVC pipe with tapered threads.
C. Line flushing valve
   1. Valve shall be schedule 40 PVC ball valve with brass hose thread adapter.
   2. Valve box shall be rigid plastic, with lockable cover by Carson Industries, LLC or accepted equal. Boxes shall be colored green in potable applications, and purple for recycled water applications.
   3. Drip system operation indicator shall be Rainbird 1812 Pop-up spray body with 4-VAN nozzle set to 0-degree pattern, with Rainbird SA-125050 swing assembly and XFF-TFA barbed bt ½” FIPT fitting, or accepted equal.

FOR COUNCIL APPROVAL ONLY

D. Pressure Regulating Filters shall be Rainbird PRB Pressure Regulating Basket Filter, or approved equal, and shall include: Basket style body and jar-top cap constructed of heavy-duty glass-filled, UV-resistant polypropylene, with 150 PSI (10,3 bar) operating pressure rating. Standard 200 mesh (75 micron) filter screen constructed of stainless steel attached to propylene frame. Normally-open in-line pressure regulating device, constructed of durable, UV resistant non-corrosive material able to accommodate an inlet pressure rating of not less than 150 PSI (10,3 bar), with preset outlet pressure of approximately 40 PSI (2,8 bar).

2.11 Thrust Blocks

A. All thrust blocks shall be concrete. The size of the blocks shall be determined by the average safe soil-bearing load of 700 lbs. per square foot.
B. Polyethylene sheeting at thrust blocks shall be 6mil.

2.12 Quick Coupler Valves

A. For potable water, quick coupling valves shall be Rainbird #44LRC or accepted equal. For recycled water, quick coupling valves shall be Rainbird #44NP lockable or accepted equal. All quick coupling valves shall be:
   1. brass or bronze with one (1) IPS female pipe connection,
   2. two piece body with a removable upper portion (for replacement), and
   3. durable yellow covers for potable and purple for recycled.
B. Valve keys shall be brass or bronze and shall be of the same manufacturer and size as the valve.
C. Valve box shall be rigid plastic, a minimum of ten inches (10”) in diameter with lockable cover by Carson Industries, LLC or accepted equal. Boxes shall be colored green in potable applications, and purple for recycled water applications.
D. Where recycled water is used, conform to the City of Roseville Design and Construction Standards.

FOR COUNCIL APPROVAL ONLY

2.13 Manual Valves

A. For pipe four inches (4”) and larger gate valves shall be:
   1. located where shown on the Plans,
   2. flanged with Class 125 cast iron body,
   3. bronze trimmed with a non-rising stem,
   4. square operating nut,
   5. able to withstand a cold water pressure of 150 pounds per square inch, and
   6. sized to match the pipeline which the valves serve, unless otherwise shown on the Plans.
B. For pipe three inches (3”) or smaller

1. located where shown on plans
2. lead free
3. Able to withstand cold water pressure of 300 pounds per square inch
4. sized to match the pipeline which the valves serve, unless otherwise shown on the Plans.
5. Nibco T-113-LF or approved equal.

C. Pipes which feed directly into a remote control valve, ball valves shall be installed and shall:
   1. allow for manual operations,
   2. rapid on/off , drip-tight shut-off control,
   3. be constructed of bronze or brass with heavy-duty handle,
   4. operate up to 22 gallons per minute,
   5. operate between 15 and 150 pounds per square inch, and
   6. be sized to match the pipeline which the valves serve, unless otherwise shown on the Plans.

D. Valve box shall be rigid plastic, a minimum of ten inches (10") in diameter with extensions and lockable cover by Carson Industries, LLC, as shown on the Plans or accepted equal. Boxes shall be colored green in potable applications, and purple for recycled water applications.

2.14 Automatic Irrigation Controller

A. Automatic controllers upgrade shall be per plans or as specified herin:
   1. 3-CS3-8STA-KIT CS3000 station add on card,
   2. CS3-EN Ethernet communications modem.

B. Third-Party Communications hardware required:
   1. Sierra Wireless AirLink RV55 LTE-A PRO Router (#1104303)
   2. Router AC Adapter (#2000579)
   3. AT-5 (or higher) Ethernet Cable - 1ft (#A3L781-01-BLU)

2.15 Control Wires

A. Direct burial solid copper wire AWG-U.F. 600 volt.

B. Common wire and two spare wires shall be minimum #12-gauge.

C. Pilot wires shall be red, minimum #14-gauge. Wire gauge shall be, at minimum:

Wire Gauge	#14	#12	#10	#8
Max. Distance (ft.)	2,500	3,250	4,000	4,800

D. Splices:
   1. Wire connections at remote control valves only shall utilize 3M direct bury splice kit model #DBY (yellow) or model #DBR (red).
   2. All other splices, including line splices, connections to flow meters and other sensors shall utilize 3M Scotchcast 3570G Connector Sealing Packs, no known equal.

FOR COUNCIL APPROVAL ONLY

E. Wiring colors shall be:

USE	COLOR
Flow	Yellow
Master	Blue
Pump	Black
Valves	Red
Common	White
Spare	Orange
Tracer	Green

2.16 Sleeves

A. Schedule 40 PVC 1120-1220 and two times the diameter of the pipe to be accommodated by the sleeve, one (1) for control wires and one (1) for main line, and one (1) for lateral lines.
B. Maximum one (1) line per sleeve.
C. Add one (1) spare, same size as largest.

2.17 Tracer Wire

A. Insulated solid copper wire, minimum #12 gauge. Color shall be green.

PART 3 - EXECUTION

3.01 Site Conditions

A. Prior to start of irrigation work, review the site conditions to verify that stub- outs, points of connections, sizes of the points of connections, water pressure and other essential items necessary for irrigation work to commence are as shown on the Plans and as indicated in the Specifications.
B. Notify the Inspector immediately of any existing conditions which are unacceptable for the commencement of irrigation work.

3.02 Coordination of Work

A. Coordinate all work with other trades.
B. The irrigation plan is diagrammatic. Whenever possible, locate all pipes in planted or turf areas. Do not scale off of the Plans. Where field conditions have changed, notify the Inspector immediately.

3.03 Excavation and Trenching

A. Trenches shall be dug straight and in such a manner as to completely support the pipe continuously along the bottom of the trench. In rocky conditions, over-excavation and placement of clean bedding material may be required to ensure protruding rocks do not place undue stress on pipes. Trench layout shall follow that shown on the Plans, except where accepted by the City.
B. The following minimum cover shall be provided for pipe:

FOR COUNCIL APPROVAL ONLY

Pipe Type	Minimum Cover
Pressurized Mainlines	24”
Non- Pressurized Lateral Lines	18”
Domestic Water Lines	24”
Control wires	24”
PVC Sleeves under Paving	18”
PVC Sleeves under Auto X-ings	24”

C. Install detection wire, looped in and out of valve boxes and attached to all irrigation mainlines.
D. High voltage wires shall not be installed in the same irrigation water line trench.

3.04 Testing and Flushing

A. Pressure Testing shall occur only when the following conditions can be fulfilled:

Item Description	Condition
Quick coupler valves	Installed and capped
Electric remote control valves	Installed
Flow valve	Installed and open
Ball/Gate valves	Installed and open
Lateral lines	Disconnected
Welded PVC joints	Cured at least 24 hours
Pipe	Center loaded with backfill
Concrete Thrust Blocks	Installed and cured at least 48 hours
Couplings and fittings	Exposed
Detection wire	Installed

B. A pressure gauge shall be installed at the lowest point of the line. Continuous pressure shall be applied at a rate of 125 psi for all mainlines. The pressure shall remain stable for a minimum of two hours with no detectable leakage. Upon completion of the test, a complete examination of the line shall be conducted by the City. Leaks resulting from the test shall be repaired and the line shall be re-tested. This process shall be repeated until the line passes the leakage test.
C. All lines and risers shall be flushed prior to final installation of irrigation heads. All control valves shall be left open during the flushing process.

3.05 Backfilling and Compacting

A. Backfilling of trenches shall not occur until all tests and reviews have been performed. See inspection record contained in the Parks Construction Standards, latest edition. Any trench that is prematurely backfilled may be required to be re-dug for review.
B. Compaction of the trenched areas shall meet the following compaction rates of 95% in areas to receive paving and 85% in areas to be planted.
C. Do not flood trenches unless otherwise accepted by the City.

FOR COUNCIL APPROVAL ONLY

D. Sunken trenches shall be re-finished flush with the adjacent grades.

3.06 Backflow Prevention Device and Enclosure

A. Install per local codes and manufacturer's instructions.

3.07 Flow Meter Installation

A. Install per local codes and manufacturer's instructions.
B. All flow meters shall be installed in ground.
C. Install 3/4" conduit from irrigation controller to flow meter valve box. Install a pull box every 100'.
D. Valve box lids shall be permanently marked identifying FM for flow meter and MV for master valve and GR for grounding rod with heat branding using stencils in a uniform location on all boxes throughout.

3.08 Booster Pump Installation

A. Install per local codes and per manufacture's instruction.
B. Furnish wires and conduits to connect electrical power, and 24-volt pump start controls to the VFD panel located inside the VFD panel
C. Ductile iron plumbing from the flanges above ground to the mainline.
D. Install level concrete housekeeping pad for the pump enclosure per plans, 4" thick, 1"above ground, with 1/2" tool edges
E. Thrust blocks to be installed per pump manufacturer's and landscape architect's requirements.

3.09 Pipe Installation

A. Install irrigation pipe in planted areas whenever possible.
B. All pipe and fittings shall be cleaned and free from dirt, dust and moisture.
C. Pipe may be assembled along the trench at grade to avoid undue strain on the pipe or the fittings. All solvent weld connections shall be primed before applying glue. Snake the pipe within the trench to compensate for expansion and contraction.
D. All PVC pipe and metal valve connections shall be made with threaded fittings consistent with drawings PK-15 and PK-16 of the City of Roseville Parks Construction Standards.
E. All PVC-to-PVC threaded connections shall be made with Teflon tape.
F. Install concrete thrust blocks in locations where rubber gasketed irrigation mainlines change directions, e.g. ells, tees; as required on other lines and fittings; and at the termination point of the mainline. Do not conduct a pressure test within 48 hours of the thrust block pours. The size of the thrust blocks shall be per manufacturer's instructions and shall be adequate in size to absorb thrusts up to the maximum internal water pressure. Refer to 3.18 Thrust Blocks.

FOR COUNCIL APPROVAL ONLY

G. Use glued fittings for all connections inside of a sleeve and within 20' of a sleeve.
H. When multiple pipes are in the same trench, provide a minimum 2" horizontal separation between pipes, or equal to diameter of pipe, whichever is larger. Do not stack pipes vertically.

3.10 Electric Remote Control Valves

A. Install per local codes, manufacturer's instructions, City of Roseville Design and Construction Standards and as shown on the Plans.
B. Install one (1) electric remote control valve per box and whenever possible, group valve boxes together. Align boxes in a straight and neat row and flush to finish grade. Provide a minimum of six (6) inches between boxes.
C. All valves shall be tagged for easy identification of valve number. Valve box lids shall be permanently marked identifying valve number and controller letter with heat branding using stencils in a uniform location on all boxes throughout.
D. Each valve shall be separately saddle tapped. Manifolded valves shall be rejected.
E. Locate valve boxes outside of turf areas, adjacent to paving, i.e. sidewalks, hardscape, etc. except where shown on the Plans.
F. Provide a minimum of eighteen (18) inches of a complete set of spare control wires, looped, within all control valve boxes.

3.11 Irrigation Heads

A. Install all heads where shown on the Plans and as specified herein.
B. Turf rotary pop-up heads shall be placed two (2) inches from any edge of adjacent walkway, concrete mow band, concrete curb, header board or other hardscape edging, or as required by current WELO regulations.
C. Rotary pop-up heads shall be installed flush with the top of finish grades of turf or planting areas.
D. Sprinkler head riser nipples sizes shall match or be the same as the riser opening of the sprinkler body.
E. Install sprinkler heads with internal check valves where heads are located in low drainage areas, i.e. bottom of berms, bottom of drainage swales, toe of slopes, etc.
F. Install all heads perpendicular to ground surface with an offset from the edge of pavement as indicated in the details.

3.12 Drip Irrigation

A. Drip irrigation is to be installed in a grid pattern layout of equal spacing between rows, unless otherwise noted on approved plans.

FOR COUNCIL APPROVAL ONLY

B. All drip irrigation shall be installed sub-surface, per manufacturer's specifications. Staple all tubing to soil at 5 feet on-center spacing prior to backfilling.
C. Drip line shall be installed prior to plant installation, with the exception of 15-gallon and larger plant container sizes, which may be installed first at the discretion of the contractor.
D. Line Flushing Valves are to be installed below grade, as detailed, in a valve box with bolt-down lid to allow for periodic inspection and flushing.
    1. Minimum of One (1) Line Flushing Valve shall be installed for every fifteen (15) GPM of zone flow, and at every termination point within a zone, and shall be installed at a point farthest away from the source (typically on an exhaust header) as possible.
E. Pop-up drip system operation indicators shall be placed within eighteen inches (18") of each Flush Valve and shall not be placed such that it will be obstructed by vegetation. Place minimum twelve (12) inches from adjacent hardscapes.
F. If required, Air/Vacuum Relief Valves shall be installed below grade in valve boxes to allow for periodic inspection.
G. Valve box lids shall be permanently marked identifying LF for Line Flush valve and AR for Air/vacuum Relief with heat branding using stencils in a uniform location on all boxes throughout.

3.13 Quick Coupler and Gate Valves

A. Install per local codes and manufacturer's instructions.
B. Locate valve boxes flush with finish grade, twelve (12) inches from walkways, curbs, header boards, etc., and within planted area whenever possible.
C. Install one (1) valve per box.
D. For quick coupler valves, install at 100 feet on center to the extent possible. Provide a 24" steel support staked adjacent to the riser using two (2) stainless steel clamps.
E. For gate valves, install at locations indicated on the Plans.
F. For valve boxes installed below grade, provide 3M ball markers.
G. Valve box lids shall be permanently marked identifying GV for gate valve and QC for quick couplers, and SB for splice boxes with heat branding using stencils in a uniform location on all boxes throughout.

3.14 Automatic Controller

A. Install per local codes and manufacturer's instructions within the specified enclosure.
B. Provide single Paige Cable P-7171D installed in conduit between all controllers.
C. Provide all necessary wiring for a complete installation between the controller and the valves.

FOR COUNCIL APPROVAL ONLY

D. Above grade wiring shall be installed in metal conduit, unless otherwise accepted. Securely mount conduit onto enclosure or wall and paint to match the adjacent surface.
E. Provide a grounding rod and bonding for each enclosure as required for lightning protection. Grounding rod shall be consistent with drawing PK-1 of the City of Roseville Parks Construction Standards. Install separate grounding rods for each enclosure where bonding is impractical.
F. Label each controller, using permanent markings, with the letter identification indicated on the Plans. Affix label on the inside of the controller cabinet door.
G. Install 110V outlet (GFIC) inside controller enclosure.
H. Provide two (2) reduced as-built irrigation diagrams, laminated and color-coded indicating controller letter, valve/station numbers, valve size, operating pressure, gallons per minute and type of planting for each valve. See Section 01 10 00: Summary of Work 1.15B.
I. Ground test to be conducted after installation. Test results shall not exceed 25 ohms.

3.15 Control Wires

A. Wherever possible, install control wires in common trenches with mainline. The wires shall be taped in bundles at ten (10) feet on center and laid to the side of the pipe. Provide slack between ties to allow for contraction.
B. Wire valve to controller as shown on the plans.
C. Where runs are long, provide an extra three (3) feet of extra common and control wires looped at 200’ intervals. Snake wires within trenches to allow for contraction.
D. Line splices shall occur in valve boxes at grade, label and allowed only on lengths greater than 2500’. Show locations on as-built plans.
E. Do not wrap wire around pipe or allow any wiring to be placed in concrete or concrete thrust blocks.
F. Install two (2) spare wires starting from the controller, looped to each valve box to the furthest valve box, without splices.

3.16 Tracer Wire

A. Install tracer wire on top of the mainline.
B. Provide a twelve-inch (12”) loop in and out of each valve box. Solder all splices.
C. Where potable water lines are placed in a separate trench, install a tracer wire on top of the potable water line per City of Roseville Design and Construction Standards
D. Tracer wire shall be tested during review and pressure test of the mainline.

FOR COUNCIL APPROVAL ONLY

3.17 Sleeves

A. Install sleeves under all pavement and as shown on the Plans.
B. Install sleeves at the depths indicated in Section 3.03B above.
C. Extend sleeves a minimum of twelve (12) inches beyond the edge of pavement.
D. At every sleeve location installed in roadways, provide a spare PVC sleeve capped at each end and marked with a 3M ball marker.

3.18 Thrust Blocks

A. Install polyethylene sheeting between mainline and concrete.
B. Thrust blocks shall be formed against a solid trench wall. The thrust block cavity shall be in undisturbed soil or previously placed compacted backfill that yields an acceptable allowable bearing pressure.
C. Concrete thrust blocks shall not be poured on valve wires.

3.19 Cross Connection Testing for Recycled Water Systems

A. The Recycled Water System shall be tested for cross connection in accordance with Uniform Plumbing Code Appendix J prior to use.
B. All testing of Recycled Water Systems must be performed utilizing a potable water source via a construction water connection per City of Roseville Construction Standards. No Recycled Water may enter a Recycled Water System until all testing is successfully completed.
C. At the time a cross connection test is to be performed, construction on both the Potable and Recycled Water Systems being tested must be complete and both systems fully operational and functioning as designed.
D. Cross connection testing shall be performed in the system by City forces with the assistance of the contractor. The test must be coordinated through the Parks Department Inspector. Allow one week's notice to schedule the cross-connection test. Depending on complexity of the site, a preliminary field meet may be required.

FOR COUNCIL APPROVAL ONLY

3.20 Coverage Test

A. Prior to planting, the Contractor shall perform a coverage test to confirm that water coverage is complete and adequate, and produces no overspray onto hardscapes. Irrigation pressure readings at the head or emission device may also be taken as part of the coverage test to confirm adequate system hydraulics.
B. The coverage test shall be performed on the entire irrigation system and shall be performed in the presence of the Parks Inspector. The irrigation system must be connected to the City water system through the water meter. Temporary connections are not allowed. On recycled water systems, the

coverage test shall take place only after successful completion of the cross-connection test, with the recycled water meter in place.

C. On Park projects containing turf, a comprehensive survey of the Distribution Uniformity (Low Quarter) of each irrigation zone containing turf shall be performed by a third-party, Certified Landscape Irrigation Auditor prior to planting of turf. The irrigation system must be 100% complete, including functionality of the irrigation controller and booster pump, if present. The irrigation auditor shall prepare and submit a report listing each zone's Distribution Uniformity, including actual mapping data of individual catch cans recorded on irrigation plan sheets, and noting any potential deficiencies in the system leading to any inadequate findings. Reported deficiencies in Distribution Uniformity will be evaluated by the Project Manager and may require corrective measures prior to approval of turf planting. Deficiencies caused by improper installation shall be corrected at no additional cost to City.

3.21 Irrigation Audit

A. A landscape irrigation audit shall be performed after all landscape and irrigation is installed. The irrigation system must be 100% complete, including functionality of the irrigation controller and booster pump, if present.

B. All landscape irrigation audits shall be conducted by a third party certified landscape irrigation auditor. Landscape audits shall not be conducted by the person who designed the landscape or installed the landscape.

C. The water audit shall conform to the specific water audit requirements of the City of Roseville Environmental Utilities Department, and any supplemental requirements from the City of Roseville Parks, Recreation & Libraries Department. The contractor shall submit a comprehensive landscape irrigation audit. This shall include, but is not limited to:
   1. A completed Irrigation Audit Report-(City of Roseville provided forms only)
   2. Complete system evaluation, including site conditions, system and flow data.
   3. Scheduling parameters used to set the irrigation controller.
   4. An Irrigation schedule for the landscape provided to the owner.

D. A minimum of 25% of all zones shall be audited. The 25% minimum shall be a representative sample of each irrigation method present (i.e. Rotors, bubblers, rotary nozzles, drip, etc.), and is in addition to any turf zones audited during the coverage test.

E. Any deficiencies noted in the audit report such as, but not limited to, run-off, overspray, obstruction of spray patterns, etc., shall be corrected and signed off as such by the original irrigation auditor prior to submission of the report. Do not submit audit reports with uncorrected deficiencies.

FOR COUNCIL APPROVAL ONLY

3.22 Clean Up

A. Each phase of work shall be immediately cleaned up. Excess equipment, material, etc., shall be legally disposed of and removed from site. All concrete, asphalt and/or decomposed granite paving shall be kept free of soil. Damage to such surfaces shall be immediately repaired to the satisfaction of the City.

PART 4 - GUARANTEE

4.01 General

A. Contractor shall provide a written guarantee covering all materials, equipment and workmanship furnished by him to be free of all defects after installation is accepted, including all defective parts that may have been found.
B. All paved areas shall be swept clean and planted areas shall be weed-free.
C. All irrigation heads shall be properly adjusted. Debris and refuse shall be removed from site prior to inspection.

4.02 Pre-Final (Punch List) Review

A. See Section 01 10 00 1.16 - Summary of Work for notification process.

4.03 Establishment

A. Full automated utilization of the irrigation system shall be included as part of the maintenance of the project. See Section 329000: Planting for additional information.
B. Program and utilize the establishment schedule as submitted with the turn-in items.
C. Contractor to run the system in “quantity” mode or “time plus flow” for a minimum of one (1) week.
D. Check the irrigation system weekly to ensure proper operations. Make all necessary adjustments, including watering schedule to ensure proper and healthy plant growth. At no time shall pools of water be present within any part of the project. Conversely, at no point shall dry or under-watered spots be visible upon inspection. Improper irrigation management resulting in flooding or dry conditions to the detriment of plant material may constitute an extension of the establishment period, at no additional cost to the City.

4.04 Final Review

A. The Contractor shall demonstrate to the City, valve by valve, the entire irrigation system to be operable. All heads shall be adjusted/flushed and all drip zones shall be flushed prior to the on-site review. Any item requiring adjustments shall be completed immediately and to the satisfaction of the City.
B. Provide necessary training to City staff in the proper operations and maintenance of the booster pump.

FOR COUNCIL APPROVAL ONLY

C. The date of final acceptance by the City Council or the recordation of the property transfer shall signify the start date of the warranty period. Final acceptance shall include the project in total and will not segregate any specific item or trade included in the construction of the project.

END OF SECTION

FOR COUNCIL APPROVAL ONLY

SECTION 32 90 00
PLANTING

PART 1 - GENERAL

1.01 General Requirements

A. The requirements set forth in the General Conditions shall be in addition to the standards provided herein.

B. The requirements set forth in the Supplemental Conditions shall be in addition to the standards provided herein.

1.02 Description

A. Furnish all labor, materials and equipment for the complete installation of landscape items, including all trees, shrubs, groundcovers and turf; maintenance for the establishment of new plant materials; and all necessary appurtenances for proper planting, noted or implied, as shown on the Plans and as specified herein.

1.03 Related Work

A. Section 31 20 00: Earthwork

B. Section 32 84 00: Irrigation System

1.04 Quality Assurance

A. Provide an experienced foreman who shall directly supervise the work force during all work to be performed under this contract. The foreman shall be present during the time when work is to be performed.

B. Plant material shall conform to current “American Standards for Nursery Stock” and the State of California Grading Code of Nursery Stock, No. 1 grade. Use only nursery-grown stock.

C. All plant material shall be certified free of plant diseases and insect infestations from the County Agricultural Commissioner as required by law. Each shipment of plant material shall be required to have clearance certificates.

D. Prior to planting, a soils fertility test/analysis shall be conducted by an accepted and qualified testing laboratory. Test results shall contain existing nutrient levels, soil texture, cation exchange capacity, soluble salts, pH levels, infiltration rates and recommended soil amendments/fertilizers to ensure proper growth of the specified plantings.

FOR COUNCIL APPROVAL ONLY

1.05 Submittals

A. Submittals for specified items are not required; however, submittals are required for any proposed substitutions or deviations from the Plans or Specifications. Additionally, submittals are required for the specific items listed below. The Contractor shall submit a materials summary sheet indicating which items will be installed as specified and which items are proposed for substitutions. The Contractor shall submit proof of order within ten (10) working days of the Notice to Proceed, indicating all specified materials have been ordered, noting “as specified” or “substitution proposed”. Submittals are required on the following items:

1. Bark mulch material,
2. Certificates of compliance for turf seed mix, soil amendments, fertilizers and hydroseed mix,
3. Sod-grown turf,
4. Soils test-with soil amendment recommendations.
5. Trees
    a) Submit for approval, plant sources including the names of nurseries proposed as sources of acceptable trees, and a list of the trees they will provide. The plant list shall include the botanical and common name and the size at the time of selection, including basal caliper and height.
    b) Submit all requests for substitutions of plant species or size for approval. Request for substitution shall be accompanied with a list of nurseries contacted in the search for the required plant and a record of other attempts to locate the required material. Requests shall also include sources of plants found that may be of a smaller or larger size, or a different shape or habit than specified, or plants of the same genus and species but different cultivar origin, or which may otherwise not meet the requirements of the specifications, but which may be available for substitution.

FOR COUNCIL APPROVAL ONLY

1.06 Soil Testing

A. Native soil and in-place topsoil shall be tested for amendment determination. Soil Tests shall include soil texture, macro nutrients, micro nutrients, lime, base saturation, pH, sodium, boron, salinity, Cation Exchange Capacity (CEC), and Organic content.

B. Submit soils report for review and approval after completion of grading operations. Soil Testing shall be performed by an agriculture-based lab, with detailed, written recommendations for soil amendments and fertilizers specific to ornamental landscape plants and turf.

1.07 Product Delivery, Handling and Storage

A. All materials shall be delivered bearing nursery label with botanical, common names, including cultivars.

B. Carefully handle plant material to ensure that limbs are not broken during the planting or storage of the material.

C. Store plant material in a covered area on-site, protected from inclement or hot weather on-site. Keep root balls moist by frequent watering (during hot weather) of all accepted stock until such time as planting occurs.

1.08 Inspection of Plant Material

A. Notify the Project Manager a minimum of 48 hours prior to date of delivery. All plant material is subject to inspection at the time of delivery. A sample number of plants will be inspected for the following items:

If the sample....	then the plant shall be...
is healthy, shapely and well rooted	accepted.
bears a strong central leader	accepted.
is wilted, wind-blown or sunburned	rejected.
is root-bound, restricted or deformed	rejected.
does not bear a strong central leader or has been severely pruned back	rejected.

B. Stock to be consistent with CALFIRE Nursery/Tree Quality Cue card and Root Management Cue Card. Inspector may require contractor to remove tree or plant stock from plant containers to examine roots.

C. 15 gal tree needs to have at least 1” in basal caliper, a 24” box tree needs to have at least 2” in basal caliper, a 36” box tree needs to have at least 3” in basal caliper. Basal caliper is measured as 6” above the ground.

D. Based on the sample inspection, the Project Manager or Inspector reserves the right to reject any or all of the plant material delivered. All rejected plant material shall be immediately disposed of off-site.

FOR COUNCIL APPROVAL ONLY

1.09 Record Drawings

A. The Contractor shall keep an accurate record of the as-built conditions of the landscaping. These records shall be updated daily and kept at the construction site. At any time, the Inspector may examine the conditions of the “as-builts” to ensure compliance of the above.

PART 2 - PRODUCTS

2.01 Plants

A. The material to be planted shall conform to that indicated on the plans, unless otherwise accepted. The quantity shown on the Plans is approximate and is

furnished for convenience only. Verify all quantities prior to ordering plant material.

2.02 Turf

A. Turf shall be *seed or sod*.
B. Seed –
   1. 98% pure, weed-free mixture with a minimum of 95% germination. Deliver on-site unopened and in the original containers.
   2. 100% Turf Saver RTF (Rhizomatous Tall Fescue) by Barenbrug or accepted equal.
   3. Turf seed mix shall be Blue tag certified.
C. Sod – Tall fescue blend with named, improved turf-type varieties only. Blend shall contain a minimum 25% Lateral Spread, Rhizomatous, or Self-Repair type tall fescue. Sod shall be non-netted, and contain no more than 10% Bluegrass.
D. Seed / Sod must be submitted and accepted by the Project Manager prior to ordering.

2.03 Soil Amendment

A. As recommended by soils test report.

2.04 Mulch

A. Regular “Walk-on” fir bark as manufactured by Redi-Gro Corporation, Sacramento, CA (916) 381-6063, Mallard Creek, Inc, Rocklin, CA (916) 645-1681, My Bark Company, Inc., Linden, CA (209) 649-4250 or accepted equal.
B. Decorative bark, shredded lumber or saw dust, and construction debris are not permitted. The mulch must be free of needles.

2.05 Topsoil

A. Stockpiled, on-site material.
B. Imported topsoil shall be natural, friable, well-draining, free from admixture of subsoil and foreign objects larger than one inch (1”) in diameter, free from toxins or any other harmful substance which may deter healthy plant growth.
C. Perform a soils test for all imported soil. Soil test shall comply with Section 1.06. Submit soils report for review and approval prior to import activities.

2.06 Pre- and Post- Emergent Herbicide

A. Clean, and non-staining. Consult with a pesticide specialist.

2.07 Tree Stakes and Ties

A. Trees furnished in #15 nursery containers require 2” diameter stakes. Trees less than 8' in height require an 8' stake; trees 8' or greater in height require a 10' stake. Stakes shall be pine or Douglas fir (pressure or non-pressure treated).

FOR COUNCIL APPROVAL ONLY

B. Trees furnished in 24” boxes or larger require 3” diameter by 10’ long stakes. Stakes shall be, pine or Douglas fir (pressure or non-pressure treated).
C. Tree ties and Tree Guying shall be Super Tree Tie, bursting strength 300psi, tensile strength 300lbs , 1” vinyl impregnated Nylon, waterproof, Manufactured by: Arthur Enterprises. Cut to length. Color to be Green.

2.08 Native Seed

A. Where required, native seed shall be applied as follows:
1. Upland areas

Elymus glaucus (Blue Wildrye)	10.0 lbs/acre
Nassella pulchra (Purple Needlegrass)	9.0 lbs/acre
Nassella cernua (Nodding Needlegrass)	6.0 lbs/acre
Melica caljfornica (Californiameljc)	3.0 lbs/acre
Vulpia microstachys (Small Fescue)	3.0 lbs/acre
Poa secunda (Native Pine Bluegrass)	3.0 lbs/acre
Bromus carinaws (California Brome)	2.0 lbs/acre

2. Wildflowers (addition to seed mix(es) above, if specified)

Clarkia amoena (Farewell to Spring)	0.5 lbs/acre
Eschscholzia caljfornica (California Poppy)	2.0 lbs/acre
Lupinus nanus {Sky Lupine)	3.5 lbs/acre
Nemophila menziesii (Baby Blue Eyes)	1.5 lbs/acre
Lasthenia californica (Common Goldfields)	1.5 lbs/acre

B. Areas with sandy, dry soil shall receive: Zorro Annual Fescue 6 lbs/acre, Rose Clover 9 lbs/acre
C. A fertilizer consisting of 15-15-15 shall be applied at a rate of one half pound per 1,000 square feet. Fertilizer shall be Natural-based, slow release, and balanced in N, P, & K.
D. Seed for creek banks shall conform to the latest requirements of the California Department of Fish and Game.

FOR COUNCIL APPROVAL ONLY

PART 3 - EXECUTION

3.01 Site Preparations

A. Prior to start of landscaping work, review the site conditions to verify final grades have been established, plant/turf beds are weed free, and the irrigation system is operational as shown on the Plans and as indicated in the Specifications.

B. For landscaping within all street right-of-ways, conduct a soils analysis test of the existing soils and remove all lime-treated soils, aggregate base or other non-organic material to a minimum depth of two feet before planting or irrigation installation. Import topsoil to bring the finish grade to specified grades. Submit the soils analysis test results of the imported material prior to import.
C. Notify the Inspector immediately of any existing conditions which are unacceptable for the commencement of landscaping work.

3.02 Coordination of Work

A. Coordinate all work with other trades.

3.03 Preparation of Planting and Turf Areas

A. Upon completion of grading and underground activity, Contractor shall obtain a soils test as outlined in 1.06.
B. Place stockpiled topsoil in all areas to receive planting or turf to a minimum depth of twelve inches (12”).
C. Rip topsoil surface in two directions to a minimum depth of twelve inches (12”).
D. Spread soil amendments at the rates indicated in the soils report.
E. Rototill amendments to recommended depths. Till amendments to a depth of 6” or as recommended by soils report.
F. Remove all rock and debris which are greater than ½ inch in areas to receive turf and one inch (1”) in areas to be planted.
G. All planted and turf areas to be smooth and uniform in grade as shown on the Plans.
H. Planting areas to be sloped to drain as shown on the Plans.

3.04 Storage of Plants and Trees

A. Protect materials from deterioration during delivery and storage. Adequately protect plants from drying out, exposure of roots to sun, wind or extremes of heat and cold temperatures. If planting is delayed more than 24 hours after delivery, set plants in a location protected from sun and wind. Provide adequate water to the root ball package during the shipping and storage period, including weekends and Holidays.
B. Soil moisture shall be maintained above wilting point and below field capacity for the root ball substrate or soil.
C. All plant materials must be available for observation prior to planting. Any plants determined to damaged or distressed due to improper watering may be rejected by inspector and shall be replaced at no cost to City.

3.05 Plant Installation

A. Tree and Shrub Planting

FOR COUNCIL APPROVAL ONLY

1. Remove only those plants which will be planted the same day. Place such plants in the proposed locations for review and accepted by the City prior to actual planting. Notify the Inspector a minimum of 48 hours prior to day of planting.
2. Dig planting pits as shown on the Plans and as shown in the Parks Construction Standards. Scarify the sides and bottom of pit to prevent glazing. Fill pit completely with water and allow the water to completely drain from the pit prior to actual planting.
3. Relocate any plantings taller than 6” in height that fall in front of any irrigation head in order to ensure proper coverage of the irrigation system.
4. For pits that retain water, completely penetrate the hardpan layer at the bottom of the pit and backfill with topsoil. Fill pit with water to test and ensure proper drainage.
5. Prior to tree planting a central leader needs to be established by structural pruning, as necessary. Codominant leaders need to be removed or suppressed by structural pruning. Refer to the CALFIRE "Tree Training", "Tree Planting", and "Tree Quality" cue cards and "Tree and Plant Root Management Standard and Quality Expectations" contained in Section 5 of these Standards.
6. Plants shall be removed from their containers only at the time of placement within the plant pit. Perform root pruning on all four sides of the root ball by shaving and cutting away the root ball periphery to reduce the amount of circling roots. Starting from the top and then cutting/slicing down to the bottom of the root ball. On a 15 gal container at least 1-1.5 inches of the root ball periphery needs to be removed by slicing or shaving. On a 24” and 36”box tree at least 2 inches of the root ball periphery needs to be removed by slicing or shaving. A sharp hand pruning saw needs to be used for the slicing or shaving of the root ball. Refer to the CALFIRE "Root Management" cue card contained in Section 5 of these Standards. This process will remove many girdling and circling roots deflected by the container wall and allows for root penetration within the planting basin. Spread all roots to the side to allow proper root development. Add native backfill and amendments as shown in the Parks Construction Standards and as recommended by the soils testing laboratory.
7. Plant tree at least three inches (2”) above grade on mount to prevent bowl effect. The tree’s beginning root flare must be located at top of grade with installed sod.
8. Carefully place plant into the plant pit without damaging the root ball. Water the backfill until saturated. For trees, water in by hand after planting using at least ten (10) gallons of water, minimum.

FOR COUNCIL APPROVAL ONLY

9. Where mowing will occur, provide an eight-foot (8') minimum horizontal clearance between trees and other site improvements, including shrubs.
10. Tree ties should be installed via a figure eight loop and each tie shall be secured with a nail on the tree stake. Install two (2) Super Tree Ties at 2/3 of tree height and two (2) Super Tree Ties at ½ of tree height.
11. Tree stakes should be inserted into the ground to a minimum depth of 18".

B. Groundcover Planting
   1. Place groundcover plants in neat, straight, and parallel rows, triangularly spaced as shown on the Plans and as indicated herein.
   2. Start the first row of planting at a distance equal to the on-center spacing required per plan, minimum, from the edge of the adjacent hardscape, mow band or header board.
   3. Groundcover shall be installed to the outside edge of the water basins of trees or shrubs.

3.06 Seeding- Turf and Native

(Hydroseeding for turf or natural areas)

A. Lightly scarify areas to be hydroseeded.
B. Tank, hose and associated apparatus must be thoroughly clean and free of debris or other material prior to placement/spraying of seed.
C. Hydroseed turf mix shall contain the following:

Material	**Application Rate**
Turf Seed	Per Manufacturer's Recommendations
Wood Cellulose Fiber Mulch	60 lbs. per 1,000 SF
Binder	Per Manufacturer's Recommendation
Fungicide (turf only)	1/3 lb. per 1,000 SF
Fertilizer	15-15-15 All Purpose Fertilizer. Rate per Manufacuter's Recommendation
Soil Conditioner	Per Soil Conditioner soils lab recommendation and as approved by Parks, Recreation & Libraries Department

D. Blend mix in a hydraulic mixer until all material is consistently blended.
E. Apply mix at a rate of 125 pounds per 1,000 square feet unless otherwise recommended by the manufacturer.
F. Spray mixture consistently over the area to be hydroseeded. Protect adjacent areas such as paving, walls, play areas and other from overspray.
G. At the end of each day of spraying operations, clean up all areas where overspray has occurred.
H. Once seed is placed, it should not be allowed to dry out.

FOR COUNCIL APPROVAL ONLY

3.07 Sod- Turf

A. Remove all “humps” and depressions prior to sodding.
B. Keep all sod rolls shaded and moist prior to installation.
C. Do not store sod rolls more than one (1) day. Sod shall be laid upon delivery.
D. Unroll sod one at a time for immediate installation.
E. Provide tight seam between rolls of sod (less than 1/8” gaps).
F. Stagger rows so that the ends of sod rolls are stepped.
G. For turf areas where sod is partially provided, add topsoil at all transition edges to same as finish grade.
H. Sod planted during high Summer temperatures may require fungicide application(s) as a preventative measure. A Pest Control Advisor should be consulted for recommendations. Contractor is responsible for the continued health and establishment of sod and any costs of preventative treaments.

3.08 Mulch

A. Prior to placing mulch, apply post-emergent herbicide to any weeds present, per label directions. After achieving die-off, weeds shall be mechanically cut down or hand-pulled to allow for mulch installation.
B. Prior to placing mulch, apply pre-emergent herbicide in all planting areas, per label directions.
C. Apply three inches (3”) of mulch in all landscape planter areas.
D. Keep mulch a minimum of three inches (3”) away from the trunks of all woody shrubs and four inches (6”) away from all trees. Taper mulch profile away from this point to prevent subsequent collection of mulch against trunks.

3.09 Watering

A. Upon completion of each planting or turf area, irrigate appropriately to ensure proper health and growth.
B. Continually adjust the irrigation for plant needs regardless of air temperature.

3.10 Clean-up

A. Upon completion of planting operations, collect and remove from site all empty plant containers, debris, rubbish and other trash.
B. Sweep clean and wash all hardscape areas.
C. Clean up shall occur, at minimum of once a week, at the end of the work week.
D. Maintain the entire site in a clean condition to the satisfaction of the City.

3.11 Pre-Final (Punch List) Review

A. See Section 011000 1.16 of the Summary of Work for notification process.

FOR COUNCIL APPROVAL ONLY

B. The following conditions must be met in order for planting to be considered towards substantial completion, as required to enter into the establishment period described in Section 011000, 1.16:
   1. For seeded turf:
      a. Upon completion of the second mowing of completely germinated turf. Second mowing is defined as full coverage of turfed area 90% weed free.
      b. Root depth – Turf grass roots shall be healthy, creamy-white in color and be 4” or greater in length/depth as measured from the soil surface to root tip. This shall be consistent throughout turfed area.
      c. Turf shall be of uniform green color with no visible signs of stress due to soil fertility, moisture, disease or pests.
   2. For sodded turf:
      a. Accepted installation of the sod.
      b. Turf shall be of uniform green color with no visible signs of stress due to soil fertility, moisture, disease or pests.
   3. For trees and shrubs:
      a. Trees and shrubs shall be properly installed, and with no visible signs of stress due to soil fertility, moisture, disease or pests.

3.12 Establishment Period

A. Active maintenance is required throughout the entire establishment period:
   1. Maintain turf to a height of two and one half inches (2-1/2”) for cool season turf varieties and one and one half inches (1-1/2”) for warm season turf varieties. Maintained height shall be measured from the surface of finish grade to the top of the leaf blade throughout the establishment period, and mowed as frequently as required to maintain said height. At no time shall the leaf blade be mowed or cut more than 1/3 of the length of the blade. Root mass/depth must remain consistent as measured at the start of establishment or greater.
   2. Edge all turf areas along hardscape edges.
   3. Re-seed all bare areas within the turf as soon as evident.
   4. Immediately replace all dead plants.
   5. As necessary, raise all trees and shrubs which have sunk within the plant pit beyond the levels indicated in the Standard details.
   6. Keep all areas free of weeds, pests and disease.
   7. For trees located in turf areas, maintain a circle free of turf at a distance described in the Standard details
B. Prior to the start of the final thirty (30) days of establishment:
   1. All plant replacements shall be completed.
   2. All plantings and turf shall be thriving and in a healthy condition.

FOR COUNCIL APPROVAL ONLY

3. The lack of active maintenance prior to the final thirty (30) days may constitute a delay in the start of the final thirty (30) days of the establishment period.

3.13 Final Review

A. The Inspector shall review the site for completion of items noted, but not limited to, “B” below. All corrective action is required to enter into the final thirty (30) days of establishment.
B. The site shall be prepared for review, by ensuring that:
   1. All spray heads have been properly adjusted,
   2. Dead plants have been replaced,
   3. Planting areas have been weeded,
   4. Turf areas have full germination, are consistent in green color and are weed-free,
   5. Walkways and paved areas have been swept and washed, and
   6. Turf roots meet standards outlined in 3.10
C. Failure to complete any one or all of the above items may constitute non-performance of the final review and will require re-scheduling. In this case, the cost of the extended establishment period shall be at no additional cost to the City.

PART 4 - GUARANTEE

4.01 General

A. Contractor shall provide a written guarantee covering all plant materials (trees & shrubs) furnished by them to be free of all defects or disease and that all plants are in a healthy and thriving condition at the completion of the contract. Deciduous plant material shall be warranted beyond the time of contract completion until such time as growth becomes evident.
B. All plants, except those provided by the City, shall be warrantied for a period of one (1) year, commencing on the date of final acceptance. The warranty shall be as outlined in Section 011000: Summary of Work, paragraph 1.19.

(

FOR COUNCIL APPROVAL ONLY

END OF SECTION

FOR COUNCIL APPROVAL ONLY

SECTION 33 00 00
UTILITIES

PART 1 - GENERAL

1.01 General Requirements

A. The requirements set forth in the General Conditions shall be in addition to the standards provided herein.
B. The requirements set forth in the Supplemental Conditions shall be in addition to the standards provided herein.
C. The standards set forth in the City of Roseville Design and Construction Standards, latest edition, for storm drainage throughout the project and for sanitary sewer installations within the public rights-of-ways, easements, or as shown on the improvement plans shall be in addition to the standards provided herein.
D. The standards set forth in the latest edition of the California Building Code (CBC) for sanitary sewer installation within the project site, outside of the public right-of-way or easement shall be in addition to the standards provided herein.

FOR COUNCIL APPROVAL ONLY

1.02 Description

A. Furnish all labor, materials and equipment for the complete installation of the storm drain system, and necessary appurtenances as shown on the Plans and as specified herein.
B. Submit a materials listing for review and approval prior to commencement of specified work.

1.03 Related Work

A. Section 31 10 00: Clearing and Grubbing
B. Section 31 20 00: Earthwork

1.04 Safety Requirements

A. Furnish, install and maintain required sheeting, shoring, bracing, and other methods to ensure complete and safe work environment for all workers. Upon completion of work, remove all bracing, shoring, etc. in its entirety, unless otherwise directed by the Inspector.
B. Prior to excavation or trenching, the Contractor shall contact USA Alert (800)
C. 227-2600 to locate all known utilities a minimum of 48 hours prior to start of work. During the course of construction, the Contractor shall take every precaution to maintain and protect utilities noted to remain. Said utilities shall remain operational at all times, unless otherwise noted on the plans.

D. The existing utilities are shown on the Plans based on the information available at the time of contract document development. The City shall not assume responsibility for any inaccuracies or incompleteness of the Plans based on such information. The Contractor shall immediately notify, upon damage of any pipeline or facility, the Owner and/or its agents and take every action necessary to repair or replace damaged facilities to the satisfaction of the Inspector, and at no additional cost to the City.
E. Trenches, excavations and repair of pavement shall be consistent with Section 31 20 00: Earthwork.

1.05 Coordination

A. The piping system as shown on the Plans is diagrammatic. The Contractor shall make reasonable adjustments to the layout to avoid conflicts, based on actual field conditions. Said changes shall not interfere with the design intent of the system.

1.06 Tolerance

A. The allowable tolerance for the installation of pipe is 0.05 feet within grades or spot elevations indicated on the Plans.

1.07 Product Storage

A. Take every precaution to protect the materials and pipes from damage during the delivery, storage and installation of the pipe system. Store in a cool, contained area, protected from direct sunlight and per manufacturer's recommendations. Pipe shall be supported on firm level ground at the site.

1.08 Record Drawings

A. The Contractor shall keep an accurate record of the as-built conditions of the storm drain and sanitary sewer system. These records shall be updated daily and kept at the construction site. At any time, the Inspector may examine the conditions of the "as-builts" to ensure compliance of the above.

FOR COUNCIL APPROVAL ONLY

PART 2 - PRODUCTS

2.01 General

A. All products shall conform to City of Roseville Design and Construction Standards, latest edition, except as noted below.

2.02 Drain Pipe

A. Solid drainpipe shall be PVC SDR 35 and shall conform to ASTM D1784, or accepted equal. Gasketed connections shall conform to ASTM F477.

B. Perforated drainpipe shall be smooth walled PVC, open per Caltrans Section 68-1.02K, or accepted equal.

2.03 Drain Rock

A. Drain rock shall be Class 2 washed, ¾" diameter.

2.04 Filter Fabric

A. Filter fabric shall be Mirafi 140N, or accepted equal.

2.05 Drains

A. Drain Inlets shall be pre-cast and a minimum size of twenty-four inches (24") square or round by Jensen Precast, or accepted equal.
   1. Grate shall be heavy duty, cast iron, walk-on, and bolt down.
   2. Box extensions shall be Jensen Precast, or accepted equal.
   3. The base shall be six inches (6") thick.
   4. Walls shall be six inches (6") thick.
   5. A "No Dumping" Metal Storm Drain Marker shall be affixed to the concrete color of each drain inlet (See Detail DR-20)
   6. Contractor may install cast-in-place drain inlets in lieu of pre-cast drain inlets. Submit shop drawings and concrete mix design for review and approval.
B. Channel Drains for baseball/softball backstop areas shall be Polycast 600 series pre-sloped trench drains with galvanized steel slotted grates or accepted equal.
C. Sanitary sewer clean outs shall be as specified in the City of Roseville, Design and Construction Standards, latest edition.

2.06 Manholes

A. Manholes shall have tongue and groove joints, be forty-eight inches (48") minimum in diameter, meeting ASTM C-478.
B. Covers shall be cast iron.
C. All components shall conform to the City of Roseville Design and Construction Standards, latest edition.

2.07 Tracer Wire

A. Insulated solid copper wire, minimum #12 gauge. Color per City of Roseville Design and Construction Standards.

2.08 Potable Water Warning Tape

A. On sites with both Recycled water and potable water lines. Blue plastic tape, 3 inches wide, with the words "CAUTION: POTABLE WATERLINE" imprinted in minimum 1-inch high, black letters per City of Roseville Design and Construction Standards. Imprinting shall be continuous and permanent.

FOR COUNCIL APPROVAL ONLY

PART 3 - EXECUTION

3.01 General

A. All pipes shall slope uniformly from given elevations shown on the Plans.
B. All pipes shall be accurately laid true to line and grade, utilizing accepted construction methods.
C. Damaged or cracked pipe and fittings shall not be installed and shall be removed from site.
D. Install all pipe in locations shown on the Plans, except where existing conditions necessitate minor changes.
E. All pipe and fittings shall be kept clean and closed throughout the course of construction.
F. Connections to existing sanitary sewer stubs shall be “TV-ed” and air tested prior to the start of construction per the City of Roseville Design and Construction Standards, latest edition.

3.02 Installation

A. Installation of the specified pipe lines shall conform to the City of Roseville Design and Construction Standards, latest edition.
B. Notify the Inspector a minimum of 48 hours prior to covering of work to ensure timely inspections.
C. Cutting of AC or concrete paving shall be clean, vertical and straight, using a saw, or other tool specific to this application. Replace paving to existing or better condition prior to work.
D. Trench and backfill shall be per City of Roseville Design and Construction Standards, latest edition.
E. Catch basins and drain inlets shall be installed with a concrete collar with “No Dumping” message and fish symbol depressed into the concrete or bolted in place, consistent with Drawing DR-20 the City of Roseville Design and Construction Standards, latest edition.
F. Drain inlets installed in mulched planter areas shall have a 12-inch wide collar of 2- to 6-inch river cobble placed over filter fabric.
G. Channel drains shall be set per manufacturer’s instructions. Place slotted grates along the entire length of the backstop, including wing fencing, wherever concrete is placed adjacent to the backstop system. Provide a below grade piped connection at all gate openings into the infield area. Do not install grated drain sections at these entry/exit points.
H. Manholes shall be per City of Roseville Design and Construction Standards, latest edition. Install grate flush with finish grade.

FOR COUNCIL APPROVAL ONLY

I. Sanitary Sewer Clean-outs shall be installed with 3M ball markers and shall be located within planted or turf areas, whenever possible. Place clean-outs at 100' intervals throughout the project. Clean-outs shall not be located within play areas. Install per City of Roseville Design and Construction Standards, latest edition.
J. Upon completion, thoroughly flush storm drain system in the presence of the Parks Inspector.

3.03 Tracer Wire

A. Install tracer wire on top of the potable water lines
B. Tracer wire shall be continuous with no splices.

3.04 Potable Water Warning Tape

A. To be used on all potable water piping installed within the same project limits as on-site recycled water piping.
B. Install plastic warning tape in pipe backfill, six inches above pipe, for the entire length of the pipe.

3.05 Cleaning

A. Keep site clean at all times. Remove from the site all debris and rubbish and legally dispose.

END OF SECTION

FOR COUNCIL APPROVAL ONLY

DRAWINGS

Project: CO-61 Park Project

Project drawings are issued as a separate plan set,
titled "CO-61 Park"
dated 2/092026
as prepared by CALA

FOR COUNCIL APPROVAL ONLY

DRAW

TEXT OF AB 626

Assembly Bill No. 626

CHAPTER 810

An act to add and repeal Section 9204 of the Public Contract Code, relating to public contracts.

[Approved by Governor September 29, 2016. Filed with Secretary of State September 29, 2016.]

LEGISLATIVE COUNSEL'S DIGEST

AB 626, Chiu. Public contracts: claim resolution.

Existing law prescribes various requirements regarding the formation, content, and enforcement of state and local public contracts. Existing law applicable to state public contracts generally requires that the resolution of claims related to those contracts be subject to arbitration. Existing law applicable to local agency contracts prescribes a process for the resolution of claims related to those contracts of $375,000 or less.

This bill would establish, for contracts entered into on or after January 1, 2017, a claim resolution process applicable to any claim by a contractor in connection with a public works project. The bill would define a claim as a separate demand by the contractor for one or more of the following: a time extension for relief from damages or penalties for delay, payment of money or damages arising from work done pursuant to the contract for a public work, or payment of an amount disputed by the public entity, as specified.

This bill would require a public entity, defined to exclude certain state entities, upon receipt of a claim sent by registered or certified mail, to review it and, within 45 days, provide a written statement identifying the disputed and undisputed portions of the claim. The bill would authorize the 45-day period to be extended by mutual agreement. The bill would require any payment due on an undisputed portion of the claim to be processed within 60 days, as specified. The bill would require that the claim be deemed rejected in its entirety if the public entity fails to issue the written statement.

This bill would authorize, if the claimant disputes the public entity's written response or if the public entity fails to respond to a claim within the time prescribed, the claimant to demand to meet and confer for settlement of the issues in dispute. The bill would require any disputed portion of the claim that remains in dispute after the meet and confer conference to be subject to nonbinding mediation, as specified. The bill would provide that unpaid claim amounts accrue interest at 7% per annum. The bill would prescribe a procedure by which a subcontractor or lower tier contractor may make a claim through the contractor.

This bill would require the text of these provisions, or a summary, to be set forth in the plans or specifications for any public work which may give rise to a claim. The bill would specify that a waiver of these rights is void and contrary to public policy, except as specified. The bill would also specify that it does not impose liability on a public entity that makes loans or grants available through a competitive application process, for the failure of an awardee to meet its contractual obligations.

FOR COUNCIL APPROVAL ONLY

By increasing the duties of local agencies and officials, this bill would impose a state-mandated local program.

This bill would, on January 1, 2020, repeal the provision establishing the claim resolution process.

This bill would specify that these provisions constitute a matter of statewide concern.

The California Constitution requires the state to reimburse local agencies and school districts for certain costs mandated by the state. Statutory provisions establish procedures for making that reimbursement.

This bill would provide that, if the Commission on State Mandates determines that the bill contains costs mandated by the state, reimbursement for those costs shall be made pursuant to these statutory provisions.

The people of the State of California do enact as follows:

SECTION 1. Section 9204 is added to the Public Contract Code, to read:

9204. (a) The Legislature finds and declares that it is in the best interests of the state and its citizens to ensure that all construction business performed on a public works project in the state that is complete and not in dispute is paid in full and in a timely manner.

(b) Notwithstanding any other law, including, but not limited to, Article 7.1 (commencing with Section 10240) of Chapter 1 of Part 2, Chapter 10 (commencing with Section 19100) of Part 2, and Article 1.5 (commencing with Section 20104) of Chapter 1 of Part 3, this section shall apply to any claim by a contractor in connection with a public works project.

(c) For purposes of this section:

(1) "Claim" means a separate demand by a contractor sent by registered mail or certified mail with return receipt requested, for one or more of the following:

(A) A time extension, including, without limitation, for relief from damages or penalties for delay assessed by a public entity under a contract for a public works project.

(B) Payment by the public entity of money or damages arising from work done by, or on behalf of, the contractor pursuant to the contract for a public works project and payment for which is not otherwise expressly provided or to which the claimant is not otherwise entitled.

(C) Payment of an amount that is disputed by the public entity.

(2) "Contractor" means any type of contractor within the meaning of Chapter 9 (commencing with Section 7000) of Division 3 of the Business and Professions Code who has entered into a direct contract with a public entity for a public works project.

(3) (A) "Public entity" means, without limitation, except as provided in subparagraph (B), a state agency, department, office, division, bureau, board, or commission, the California State University, the University of California, a city, including a charter city, county, including a charter county, city and county, including a charter city and county, district, special district, public authority, political subdivision, public corporation, or nonprofit transit corporation wholly owned by a public agency and formed to carry out the purposes of the public agency.

(B) "Public entity" shall not include the following:

(i) The Department of Water Resources as to any project under the jurisdiction of that department.

(ii) The Department of Transportation as to any project under the jurisdiction of that department.

FOR COUNCIL APPROVAL ONLY

(iii) The Department of Parks and Recreation as to any project under the jurisdiction of that department.

(iv) The Department of Corrections and Rehabilitation with respect to any project under its jurisdiction pursuant to Chapter 11 (commencing with Section 7000) of Title 7 of Part 3 of the Penal Code.

(v) The Military Department as to any project under the jurisdiction of that department.

(vi) The Department of General Services as to all other projects.

(vii) The High-Speed Rail Authority.

(4) "Public works project" means the erection, construction, alteration, repair, or improvement of any public structure, building, road, or other public improvement of any kind.

(5) "Subcontractor" means any type of contractor within the meaning of Chapter 9 (commencing with Section 7000) of Division 3 of the Business and Professions Code who either is in direct contract with a contractor or is a lower tier subcontractor.

(d) (1) (A) Upon receipt of a claim pursuant to this section, the public entity to which the claim applies shall conduct a reasonable review of the claim and, within a period not to exceed 45 days, shall provide the claimant a written statement identifying what portion of the claim is disputed and what portion is undisputed. Upon receipt of a claim, a public entity and a contractor may, by mutual agreement, extend the time period provided in this subdivision.

(B) The claimant shall furnish reasonable documentation to support the claim.

(C) If the public entity needs approval from its governing body to provide the claimant a written statement identifying the disputed portion and the undisputed portion of the claim, and the governing body does not meet within the 45 days or within the mutually agreed to extension of time following receipt of a claim sent by registered mail or certified mail, return receipt requested, the public entity shall have up to three days following the next duly publicly noticed meeting of the governing body after the 45-day period, or extension, expires to provide the claimant a written statement identifying the disputed portion and the undisputed portion.

(D) Any payment due on an undisputed portion of the claim shall be processed and made within 60 days after the public entity issues its written statement. If the public entity fails to issue a written statement, paragraph (3) shall apply.

(2) (A) If the claimant disputes the public entity's written response, or if the public entity fails to respond to a claim issued pursuant to this section within the time prescribed, the claimant may demand in writing an informal conference to meet and confer for settlement of the issues in dispute. Upon receipt of a demand in writing sent by registered mail or certified mail, return receipt requested, the public entity shall schedule a meet and confer conference within 30 days for settlement of the dispute.

(B) Within 10 business days following the conclusion of the meet and confer conference, if the claim or any portion of the claim remains in dispute, the public entity shall provide the claimant a written statement identifying the portion of the claim that remains in dispute and the portion that is undisputed. Any payment due on an undisputed portion of the claim shall be processed and made within 60 days after the public entity issues its written statement. Any disputed portion of the claim, as identified by the contractor in writing, shall be submitted to nonbinding mediation, with the public entity and the claimant sharing the associated costs equally. The public entity and claimant shall mutually agree to a mediator within 10 business days after the disputed portion of the claim has been identified in writing. If the parties cannot agree upon a mediator, each party shall select a mediator and those mediators shall select a qualified neutral third party to mediate with regard to the disputed portion of the claim. Each

FOR COUNCIL APPROVAL ONLY

party shall bear the fees and costs charged by its respective mediator in connection with the selection of the neutral mediator. If mediation is unsuccessful, the parts of the claim remaining in dispute shall be subject to applicable procedures outside this section.

(C) For purposes of this section, mediation includes any nonbinding process, including, but not limited to, neutral evaluation or a dispute review board, in which an independent third party or board assists the parties in dispute resolution through negotiation or by issuance of an evaluation. Any mediation utilized shall conform to the timeframes in this section.

(D) Unless otherwise agreed to by the public entity and the contractor in writing, the mediation conducted pursuant to this section shall excuse any further obligation under Section 20104.4 to mediate after litigation has been commenced.

(E) This section does not preclude a public entity from requiring arbitration of disputes under private arbitration or the Public Works Contract Arbitration Program, if mediation under this section does not resolve the parties' dispute.

(3) Failure by the public entity to respond to a claim from a contractor within the time periods described in this subdivision or to otherwise meet the time requirements of this section shall result in the claim being deemed rejected in its entirety. A claim that is denied by reason of the public entity's failure to have responded to a claim, or its failure to otherwise meet the time requirements of this section, shall not constitute an adverse finding with regard to the merits of the claim or the responsibility or qualifications of the claimant.

(4) Amounts not paid in a timely manner as required by this section shall bear interest at 7 percent per annum.

(5) If a subcontractor or a lower tier subcontractor lacks legal standing to assert a claim against a public entity because privity of contract does not exist, the contractor may present to the public entity a claim on behalf of a subcontractor or lower tier subcontractor. A subcontractor may request in writing, either on his or her own behalf or on behalf of a lower tier subcontractor, that the contractor present a claim for work which was performed by the subcontractor or by a lower tier subcontractor on behalf of the subcontractor. The subcontractor requesting that the claim be presented to the public entity shall furnish reasonable documentation to support the claim. Within 45 days of receipt of this written request, the contractor shall notify the subcontractor in writing as to whether the contractor presented the claim to the public entity and, if the original contractor did not present the claim, provide the subcontractor with a statement of the reasons for not having done so.

(e) The text of this section or a summary of it shall be set forth in the plans or specifications for any public works project that may give rise to a claim under this section.

(f) A waiver of the rights granted by this section is void and contrary to public policy, provided, however, that (1) upon receipt of a claim, the parties may mutually agree to waive, in writing, mediation and proceed directly to the commencement of a civil action or binding arbitration, as applicable; and (2) a public entity may prescribe reasonable change order, claim, and dispute resolution procedures and requirements in addition to the provisions of this section, so long as the contractual provisions do not conflict with or otherwise impair the timeframes and procedures set forth in this section.

(g) This section applies to contracts entered into on or after January 1, 2017.

(h) Nothing in this section shall impose liability upon a public entity that makes loans or grants available through a competitive application process, for the failure of an awardee to meet its contractual obligations.

(i) This section shall remain in effect only until January 1, 2020, and as of that date is

FOR COUNCIL APPROVAL ONLY

repealed, unless a later enacted statute, that is enacted before January 1, 2020, deletes or extends that date.

SECTION 2.
The Legislature finds and declares that it is of statewide concern to require a charter city, charter county, or charter city and county to follow a prescribed claims resolution process to ensure there are uniform and equitable procurement practices.

SECTION 3.
If the Commission on State Mandates determines that this act contains costs mandated by the state, reimbursement to local agencies and school districts for those costs shall be made pursuant to Part 7 (commencing with Section 17500) of Division 4 of Title 2 of the Government Code.

FOR COUNCIL APPROVAL ONLY

APPENDIX A - SOIL REPORT

FOR COUNCIL APPROVAL ONLY

GEOTECHNICAL INVESTIGATION



City of Roseville CO-61 Park
5125 Ashbrook Street
Roseville, California

FOR COUNCIL APPROVAL ONLY

PREPARED FOR:

CALLANDER ASSOCIATES
12150 TRIBUTARY POINT DRIVE, SUITE 140
GOLD RIVER, CALIFORNIA 95670

PREPARED BY:

GEOCON CONSULTANTS, INC.
3160 GOLD VALLEY DRIVE, SUITE 800
RANCHO CORDOVA, CALIFORNIA 95742

GEOCON PROJECT NO. S3134-05-01

DECEMBER 2025

Project No. S3134-05-01
December 3, 2025

VIA ELECTRONIC MAIL

Amanda Miller
Callander Associates
12150 Tributary Point Drive, Suite 140
Gold River, California 95670

Subject: GEOTECHNICAL INVESTIGATION
CITY OF ROSEVILLE CO-61 PARK
6200 CAMPUS PARKWAY
ROSEVILLE, CALIFORNIA

Ms. Miller:

In accordance with your authorization of our proposal (Geocon Proposal No. SA-25-0458-P-GT, dated July 2, 2025), we performed a geotechnical investigation for the subject project located at 6200 Campus Parkway in Roseville, California.

The accompanying report presents our findings, conclusions, and recommendations for the proposed renovations at the project site. In our opinion, no adverse geotechnical conditions were encountered that would preclude the projects provided recommendations of this report are incorporated into design and construction.

Please contact us if you have any questions regarding this report or if we may be of further service.

Respectfully Submitted,

GEOCON CONSULTANTS, INC.

Brenda P. Fernandez, EIT
Senior Staff Engineer

Jeremy J. Zorne, PE, GE
Senior Engineer

REGISTERED PROFESSIONAL ENGINEER
JEREMY J. ZORNE
No. 2636
GEOTECHNICAL
STATE OF CALIFORNIA

FOR COUNCIL APPROVAL ONLY

TABLE OF CONTENTS

GEOTECHNICAL INVESTIGATION PAGE

1.0 PURPOSE AND SCOPE 1

2.0 SITE AND PROJECT DESCRIPTION 2

3.0 SOIL AND GEOLOGIC CONDITIONS 2
- 3.1 Fill 2
- 3.2 Alluvium (Turlock Lake Formation) 3
- 3.3 Landscape Soil Suitability 3

4.0 GROUNDWATER 3

5.0 SEISMICITY AND GEOLOGIC HAZARDS 4
- 5.1 Regional Active Faults 4
- 5.2 Historical Earthquakes and Ground Shaking 4
- 5.3 Liquefaction 4
- 5.4 Expansive Soil 5
- 5.5 Soil Corrosion Screening 5

6.0 CONCLUSIONS AND RECOMMENDATIONS 8
- 6.1 General 8
- 6.2 Seismic Design Criteria 8
- 6.3 Soil and Excavation Characteristics 10
- 6.4 Materials for Fill 11
- 6.5 Grading 11
- 6.6 Foundations – Spread Footings / CIDH Concrete Piers 13
- 6.7 Concrete Sidewalks and Flatwork 14
- 6.8 Pavement - Hot Mix Asphalt 15
- 6.9 Pavement - Rigid Concrete 16
- 6.10 Site Drainage and Moisture Protection 17

7.0 FURTHER GEOTECHNICAL SERVICES 18
- 7.1 Plan and Specification Review 18
- 7.2 Testing and Observation Services 18

8.0 LIMITATIONS AND UNIFORMITY OF CONDITIONS 19

9.0 REFERENCES 20

FIGURES
- Figure 1, Vicinity Map
- Figure 2, Site Plan
- Figure 3, Proposed Development Plan

APPENDIX A
- FIELD EXPLORATION
- Key to Logs
- Logs of Test Pits (TP1 through TP4)

FOR COUNCIL APPROVAL ONLY

TABLE OF CONTENTS (Continued)

APPENDIX B
LABORATORY TESTING PROGRAM
Table B1, Expansion Index Test Results
Table B2, R-Value Test Results
Laboratory Results Summary
Atterberg Limits Test Results
Gradation Report
Compaction Test Report

APPENDIX C
Landscape Soil Suitability Test Results (Sunland Analytical Laboratory)

FOR COUNCIL APPROVAL ONLY

GEOTECHNICAL INVESTIGATION

1.0 PURPOSE AND SCOPE

This report presents the results of our geotechnical investigation for the proposed CO-61 Park project located at 6200 Campus Parkway in Roseville, California. The approximate site location is depicted on the Vicinity Map, Figure 1.

The purpose of our investigation was to evaluate subsurface soil and geologic conditions at the site and provide conclusions and recommendations relative to the geotechnical aspects of designing and constructing the project as presently proposed.

To prepare this report, we performed the following scope of services:

- Performed a limited geologic literature review to aid in evaluating the geologic conditions present at the site. A list of referenced material is included in Section 9.0 of this report.
- Performed a site reconnaissance to review project limits, determine exploration equipment access, and mark out exploratory excavation locations.
- Notified subscribing utility companies via Underground Service Alert (USA) a minimum of two business days (as required by law) prior to performing test pits at the site.
- Excavated four (4) test pits (TP1 through TP4) at the site with a rubber-tire backhoe equipped with an 18-inch-wide bucket to depths of approximately 10½ and 11½ feet, each.
- Obtained representative disturbed samples from the test pits. Additionally, we used a hand-driven core sampler with a 10-pound slide hammer to obtain relatively undisturbed soil samples from Test Pit TP4.
- Logged the test pits in accordance with the Unified Soil Classification System (USCS).
- Upon completion, backfilled the test pits with the excavated soil.
- Performed laboratory tests to evaluate pertinent geotechnical parameters.
- Prepared this report to summarize our findings, conclusions, and recommendations with respect to design and construction of the project.

Approximate locations of the test pits are shown on the Site Plan, Figure 2 and Proposed Development Plan, Figure 3. Details of our field exploration program including exploratory logs are presented in Appendix A. Details of our laboratory testing program and test results are summarized in Appendix B. Landscape soil suitability test results performed by Sunland Analytical Laboratory are presented in Appendix C.

FOR COUNCIL APPROVAL ONLY

2.0 SITE AND PROJECT DESCRIPTION

The irregular-shaped site encompasses a total area of approximately 5.75 acres. The site consists of one parcel identified as Placer County Assessor Parcel Number 481-270-079-000. The site is bounded by Ashbrook Street on the north, Knightsbridge Lane on the east, and undeveloped land on the south and west. Review of historical aerial photographs indicates that the site has been undeveloped since at least 1985. In the aerial photographs, a drainage swale is visible meandering across the site to at least April of 2023. Aerial photographs suggest that the drainage swale drains from near the northeast corner of the site towards the southwest corner and into an adjacent pond. Review of an aerial photograph taken in November of 2023 indicates that the drainage swale is no longer present which may suggest that the swale was backfilled. The site configuration and approximate former drainage swale boundaries are shown on the Site Plan, Figure 2.

The project consists of constructing a new park at the site which will include a half basketball court, a picnic area with a shade structure, a play structure with a shade canopy, landscaping, turf grass areas, underground utilities, a bike trail, and flatwork throughout the park. The new play structure and shade canopy/structures will likely be supported on spread footings or cast-in-drilled-hole (CIDH) concrete piers. New pavements will likely consist of hot-mix-asphalt (HMA) and/or rigid Portland cement concrete (PCC). Based on the master grading plans (Morton & Pitalo, Inc., 2023), the site will include maximum excavations and fills on the order of one to three feet. The proposed site configuration is shown on the Proposed Development Plan, Figure 3.

FOR COUNCIL APPROVAL ONLY

3.0 SOIL AND GEOLOGIC CONDITIONS

We identified geologic and soil conditions by observing and sampling test pits and reviewing the referenced geotechnical and geologic literature (Section 9.0). Soil descriptions below include the USCS symbol where applicable. Site geology is mapped as Alluvium, Turlock Lake Formation (map symbol Qtl) based on the *Preliminary Geologic Map of the Sacramento 30'x60' Quadrangle, California,* (California Geological Survey, 2011).

3.1 Fill

We encountered undocumented fill in Test Pit TP4 from the ground surface to a depth of approximately 3 feet. The fill generally consists of medium dense clayey sand (SC). Based on in-place dry density test results of representative samples of the fill, the relative compaction is greater than 90%. Therefore, over-excavation and re-compaction of the fill is not necessary. Recommendations for scarification, moisture-conditioning, and re-compaction of the top 12 inches of soil are provided in this report.

3.2 Alluvium (Turlock Lake Formation)

Below 3 feet in Test Pit TP4 and below the ground surface in Test Pits TP1 through TP3, we encountered alluvium to the maximum explored depth of approximately 11½ feet. The alluvium generally consists of interbedded layers of very stiff to hard lean clay with sand (CL) and sandy lean clay (CL), and medium to very dense clayey sand (SC) and poorly graded sand (SP).

Soil conditions described in the previous paragraph are generalized. The boring logs included in Appendix A detail soil type, color, moisture, consistency, and USCS classification of the soils encountered at specific locations and elevations.

3.3 Landscape Soil Suitability

We submitted a near-surface bulk soil sample (TP3-Bulk) to Sunland Analytical of Rancho Cordova, California to be tested for landscape soil suitability analyses. The sample was placed in re-sealable plastic bag, labeled, and transported to Sunland Analytical Laboratory in Rancho Cordova, California. The laboratory analytical report, prepared by Sunland Analytical, is attached as Appendix C.

4.0 GROUNDWATER

We did not encounter groundwater in our test pits excavated to depths of approximately 10½ to 11½ feet on September 9, 2025.

We reviewed available depth-to-groundwater data on the California Department of Water Resources (DWR) *Sustainable Groundwater Management Act (SGMA) Data Viewer* (https://sgma.water.ca.gov/webgis/?appid=SGMADataViewer#gwlevels). The SGMA Data Viewer website indicates that depth to groundwater at the site ranges from approximately 90 to 100 feet (Spring 2024).

It should be noted that fluctuations in the level of groundwater may occur due to variations in rainfall, temperature, and other factors. Depth to groundwater can also vary significantly due to localized pumping, irrigation practices, and seasonal fluctuations. Therefore, it is possible that groundwater may be higher or lower than the levels observed during our investigation.

FOR COUNCIL APPROVAL ONLY

5.0 SEISMICITY AND GEOLOGIC HAZARDS

5.1 Regional Active Faults

The site is not located within an Alquist-Priolo Earthquake Fault Zone as established by the State Geologist around known active faults. Local field reconnaissance did not reveal overt indications of an active fault trace at the site. Review of available literature indicates there are no active fault traces within 1,000 feet of the project location. The USGS Quaternary Fault and Fold Database maps the nearest active ("Historical" and "Latest Quaternary") fault as the Foothills Fault System located approximately 14 miles to the northeast of the project location. Therefore, we consider the potential for ground rupture due to onsite active faulting to be low.

5.2 Historical Earthquakes and Ground Shaking

We used the United States Geological Survey (USGS) *Unified Hazard Tool* (https://earthquake.usgs.gov/hazards/interactive/) to determine the deaggregated seismic source parameters including controlling magnitude and fault distance. The USGS estimated modal magnitude is 6.5 and the estimated Peak Ground Acceleration (PGA) for the Maximum Considered Earthquake (MCE) with a 2,475-year return period is 0.25g.

While listing PGA is useful for comparison of potential effects of fault activity in a region, other considerations are important in seismic design, including frequency and duration of motion and soil conditions underlying the site.

5.3 Liquefaction

Liquefaction is a phenomenon in which loose, saturated, cohesionless soil deposits located beneath the groundwater table lose strength when subjected to intense and prolonged ground shaking. The seismic excitation increases pore water pressure creating a buoyant effect of the loose soil. When liquefaction occurs, building foundations may sink or tilt and differential ground settlement may occur. Other effects include sand boils (ground loss) and lateral spreading if the liquefiable soil is located adjacent to a steep free face. The areas that have the greatest potential for liquefaction are those in which the water table is less than 50 feet below ground surface and the soils are predominately clean, poorly graded sand deposits of loose to medium-dense relative density.

FOR COUNCIL APPROVAL ONLY

The site is not located in a currently established State of California Seismic Hazard Zone for liquefaction. Based on the subsurface conditions encountered at the site, including predominantly clayey soils and lack of groundwater within the top 50 feet, liquefaction potential is expected to be low during seismic events. Mitigation and specific design measures with respect to liquefaction is not necessary for the project.

5.4 Expansive Soil

Laboratory Plasticity Index and Expansion Index tests on selected near-surface soil samples indicate low to medium plasticity and corresponding low expansion potential. Mitigation and/or special design considerations with respect to expansive soil is not necessary for the project.

5.5 Soil Corrosion Screening

We submitted a soil sample to Sunland Analytical of Rancho Cordova, California to be tested for pH, resistivity, chloride, and sulfate to generally evaluate the corrosion potential of the soil with respect to proposed subsurface structures. These tests were performed in accordance with California Test Method (CTM) Nos. 643, 422, and 417. The results are presented in Table 5.5A and should be considered for design of underground structures.

FOR COUNCIL APPROVAL ONLY

TABLE 5.5A
SOIL CORROSION PARAMETER TEST RESULTS
(CALIFORNIA TEST METHODS 643, 417, AND 422)

Sample No.	Sample Depth (ft.)	pH	Minimum Resistivity (Ohm-cm)	Chloride (ppm)	Sulfate (ppm)
TP2-Bulk	0 – 5	5.6	3,750	6.3	11.2
Notes: 1. ppm = parts per million					

Soil with a low pH (higher acidity) is considered corrosive as it can react with lime in cement to leach out soluble reaction products and result in a more porous and weaker concrete. Per Caltrans Corrosion Guidelines (Caltrans, 2021), soil with a pH of 5.5 or lower may be corrosive to concrete or steel in contact with the ground.

Soil resistivity is the measure of the soil's ability to transmit electric current. Corrosion of buried ferrous metal is proportional to the resistivity of the soil. A lower resistivity indicates a higher propensity for transmitting electric currents that can cause corrosion of buried ferrous metal items. In general, the higher the resistivity, the lower the rate for corrosion. Per Caltrans Corrosion Guidelines (Caltrans, 2021), resistivity serves as an indicator parameter for the possible presence of soluble salts and it is not

included as a parameter to define a corrosive area for structures. A minimum resistivity value for soil less than 1,100 ohm-cm may indicate the presence of high quantities of soluble salts and a higher propensity for corrosion. Based on the laboratory minimum resistivity test results and Caltrans criteria, soil at the location tested does not have a higher propensity for corrosion.

Table 5.5B presents a summary of concrete requirements set forth by the *California Building Code* (CBC) Section 1904 and American Concrete Institute (ACI) 318 for possible chloride exposure. Chlorides can break down the protective oxide layer on steel surfaces resulting in corrosion. Sources of chloride include, but are not limited to, deicing chemicals, salt, brackish water, seawater, or spray from these sources.

TABLE 5.5B
REQUIREMENTS FOR CONCRETE EXPOSED TO CHLORIDE-CONTAINING SOLUTIONS
(AFTER ACI 318 TABLES 19.3.1.1 and 19.3.2.1)

Chloride Severity	Exposure Class	Condition	Maximum Water to Cement Ratio by Weight	Minimum Compressive Strength (psi)
Not Applicable	C0	Concrete dry or protected from moisture	N/A	2,500
Moderate	C1	Concrete exposed to moisture but not to external sources of chlorides	N/A	2,500
Severe	C2	Concrete exposed to moisture and an external source of chlorides	0.40	5,000

FOR COUNCIL APPROVAL ONLY

The appropriate Chloride Severity/Exposure Class should be determined by the project designer based on the specific conditions at the location of the proposed structure. Further guidance is provided in ACI 318. Per Caltrans *Corrosion Guidelines*, soil with a chloride concentration of 500 ppm or higher may be corrosive to steel structures or steel reinforcement in concrete. Based on Caltrans criteria, soil at the location tested is not corrosive with respect to chloride content.

Table 5.5C presents a summary of concrete requirements set forth by CBC Section 1904 and ACI 318 for sulfate exposure. Similar to chlorides, sulfates can break down the protective oxide layer on steel leading to corrosion. Sulfates can also react with lime in cement to soften and crack concrete.

TABLE 5.5C
REQUIREMENTS FOR CONCRETE EXPOSED TO SULFATE-CONTAINING SOLUTIONS
(AFTER ACI 318 TABLES 19.3.1.1 and 19.3.2.1)

Sulfate Severity	Exposure Class	Water-Soluble Sulfate (SO_4) Content		Cement Type (ASTM C 150)	Maximum Water to Cement Ratio by Weight[1]	Minimum Compressive Strength (psi)
		Percent By Mass	Parts Per Million (ppm)			
Not Applicable	S0	$SO_4 < 0.10$	$SO_4 < 1,000$	No Type Restriction	N/A	2,500
Moderate	S1	$0.10 \leq SO_4 < 0.20$	$1,000 \leq SO_4 < 2,000$	II	0.50	4,000
Severe	S2	$0.20 \leq SO_4 \leq 2.00$	$2,000 \leq SO_4 \leq 20,000$	V	0.45	4,500
Very Severe	S3	$SO_4 > 2.00$	$SO_4 > 20,000$	V+Pozzolan or Slag	0.45	4,500

Notes: 1. Maximum water to cement ratio limits are different for lightweight concrete, see ACI 318 for details.

Based on the laboratory test results, the Sulfate Severity is classified as "Not Applicable" and the Exposure Class is S0. The concrete mix design(s) should be developed accordingly. The presence of water-soluble sulfates is not a visually discernible characteristic; therefore, other soil samples from the site could yield different concentrations. Additionally, over time landscaping activities (i.e., addition of fertilizers and other soil nutrients) may affect the concentration.

Geocon does not practice in the field of corrosion engineering and the above information is provided as screening criteria only. If corrosion sensitive improvements are planned, we recommend that further evaluations by a corrosion engineer be performed to incorporate the necessary precautions to avoid premature corrosion on buried metal pipes and metal or concrete structures in direct contact with the soils.

FOR COUNCIL APPROVAL ONLY

6.0 CONCLUSIONS AND RECOMMENDATIONS

6.1 General

6.1.1 No soil or geologic conditions were encountered during our investigation that would preclude the proposed renovations at the sites as planned, provided the recommendations contained in this report are incorporated into the design and construction of the projects.

6.1.2 Conclusions and recommendations provided in this report are based on our review of referenced literature, analysis of data obtained from our field exploration, laboratory testing program, and our understanding of the proposed development at this time. We should review the project plans as they develop further, provide engineering consultation as needed during final design, and perform geotechnical observation and testing services during construction.

FOR COUNCIL APPROVAL ONLY

6.2 Seismic Design Criteria

6.2.1 Seismic design of structures should be performed in accordance with the provisions of the 2022 CBC which is based on the American Society of Civil Engineers (ASCE)/Structural Engineering Institute (SEI) publication: ASCE/SEI 7-16, Minimum Design Loads and Associated Criteria for Buildings and Other Structures (ASCE/SEI, 2017). We used the Structural Engineers Association of California (SEAOC) and Office of Statewide Health Planning and Development (OSHPD) web application Seismic Design Maps (https://seismicmaps.org/) to evaluate site-specific seismic design parameters in accordance with ASCE 7-16.

For seismic design purposes, sites are classified as Site Class “A” through “F” as follows:

- Site Class A – Hard Rock;
- Site Class B – Rock;
- Site Class C – Very Dense Soil and Soft Rock;
- Site Class D – Stiff Soil;
- Site Class E – Soft Clay Soil; and
- Site Class F – Soils Requiring Site Response Analysis.

Based on the subsurface conditions at the site, the Site Classification is Site Class "D – Stiff Soil" per Table 20.3-1 of ASCE/SEI 7-16. For the purpose of evaluating code-based seismic parameters for design, we assumed a seismic Risk Category I, II, or III (per the CBC) for the project. Results are summarized in Table 6.2.1.

TABLE 6.2.1
ASCE 7-16 (CODE-BASED) SEISMIC DESIGN PARAMETERS
SITE CLASS "D" – STIFF SOIL

Parameter	Value	ASCE 7-16 Reference
MCE_R Ground Motion Spectral Response Acceleration – Class B (short), S_S	0.448g	Figure 22-1
MCE_R Ground Motion Spectral Response Acceleration – Class B (1 sec), S_1	0.224g	Figure 22-2
Site Coefficient, F_A	1.441	Table 11.4-1
Site Coefficient, F_V	2.152	Table 11.4-2
Site Class Modified MCE_R Spectral Response Acceleration (short), S_{MS}	0.646g	Eq. 11.4-1
Site Class Modified MCE_R Spectral Response Acceleration (1 sec), S_{M1}	0.723g*	Eq. 11.4-2
5% Damped Design Spectral Response Acceleration (short), S_{DS}	0.431g	Eq. 11.4-3
5% Damped Design Spectral Response Acceleration (1 sec), S_{D1}	0.482g*	Eq. 11.4-4

* Per Supplement 3 of ASCE 7-16 (effective November 5, 2021), a ground motion hazard analysis (GMHA) shall be performed for projects on Site Class "D" sites with 1-second spectral acceleration (S_1) greater than or equal to 0.2g, which is true for this site. However, Supplement 3 of ASCE 7-16 provides an exception stating that that the GMHA may be waived provided that the parameter S_{M1} is increased by 50% for all applications of S_{M1}. The values for parameters S_{M1} and S_{D1} presented above have been increased in accordance with Supplement 3 of ASCE 7-16.

FOR COUNCIL APPROVAL ONLY

6.2.2 Table 6.2.2 presents additional seismic design parameters for projects with Seismic Design Categories of D through F in accordance with ASCE 7-16 for the mapped maximum considered geometric mean (MCE_G).

TABLE 6.2.2
ASCE 7-16 SITE ACCELERATION DESIGN PARAMETERS

Parameter	Value	ASCE 7-16 Reference
Mapped MCE_G Peak Ground Acceleration, PGA	0.19g	Figure 22-7
Site Coefficient, F_{PGA}	1.419	Table 11.8-1
Site Class Modified MCE_G Peak Ground Acceleration, PGA_M	0.27g	Section 11.8.3 (Eq. 11.8-1)

6.2.3 Conformance to the criteria presented in Tables 6.2.1 and 6.2.2 for seismic design does not constitute any kind of guarantee or assurance that significant structural damage or ground failure will not occur if a maximum level earthquake occurs. The primary goal of seismic design is to protect life and not to avoid structural damage, since such design may be economically prohibitive.

6.3 Soil and Excavation Characteristics

6.3.1 In our opinion, grading and excavations at the site may be accomplished with standard to moderate effort using heavy-duty grading/excavation equipment. We do not anticipate project excavations to generate oversized rock material (greater than 6 inches in dimension).

6.3.2 We anticipate that temporary excavations such as footings and utility trenches may experience sloughing/caving at variable depths. Temporary excavations must meet Cal-OSHA requirements as appropriate. Excavation sloping, benching, the use of trench shields, and the placement of trench spoils should conform to the latest applicable Cal-OSHA standards. The contractor should have a Cal-OSHA-approved "competent person" onsite during excavation to evaluate trench conditions and to make appropriate recommendations where necessary. It is the contractor's responsibility to provide sufficient and safe excavation support as well as protecting nearby utilities, structures, and other improvements which may be damaged by earth movements.

6.3.3 The excavation support recommendations provided by Cal-OSHA are generally geared towards protecting human life and not necessarily towards preventing damage to nearby structures or surface improvements. The contractor should be responsible for using the proper active shoring systems or sloping to prevent damage to any structure or improvements near underground excavations.

6.3.4 If grading occurs during or after the wet season (typically winter and spring), or in periods of precipitation, in-place and excavated soils will likely be wet. In addition, soil below existing pavements are often wet, regardless of the time of year. Earthwork contractors should be aware of moisture sensitivity of site soils and potential compaction/workability difficulties.

6.3.5 Earthwork and pad preparation operations in these conditions will likely be difficult with low productivity. Often, a period of at least one month of warm and dry weather is necessary to allow the site to dry sufficiently so that heavy grading equipment can operate effectively. Conversely, during dry summer and fall months, dry clay soils may require additional grading effort (discing, mixing, or other means) to attain proper moisture conditioning.

FOR COUNCIL APPROVAL ONLY

6.3.6 Based on laboratory testing, in-situ moisture content of site soils ranges from about 8% to 15%, which on average is higher than optimum moisture content, which is approximately 10%. Due to the fine-grained nature of the soils and measured in-situ moisture contents above optimum, additional drying effort to attain moisture contents suitable for compaction should be anticipated regardless of the time of year. Mitigation alternatives may include aerating/drying the exposed soils (assuming favorable weather conditions), or chemical treatment (e.g. lime treatment). Unstable excavation bottoms may require overexcavating 12 to 18 inches and placing geotextile fabric/geogrid covered with aggregate, for stabilization. We can provide specific recommendations during construction based on conditions encountered.

6.4 Materials for Fill

6.4.1 Excavated soils generated from cut operations at the site are suitable for use as fill in structural areas provided they do not contain deleterious matter, organic material, or cementations larger than six inches in maximum dimension.

6.4.2 Import fill material should be primarily granular with a "very low" expansion potential (Expansion Index less than 20), a Liquid Limit less than 50, Plasticity Index less than 15, be free of organic material and construction debris, and not contain rock/cementations larger than six inches in greatest dimension. Import material should also contain sufficient fines to act as a binder (generally 15 percent fines or higher).

6.4.3 Environmental characteristics and corrosion potential of import soil materials should also be considered. Proposed import materials should be sampled, tested, and approved by Geocon prior to its transportation to the site.

FOR COUNCIL APPROVAL ONLY

6.5 Grading

6.5.1 All earthwork operations should be observed and all fills tested for recommended compaction and moisture content by a representative of Geocon.

6.5.2 References to relative compaction and optimum moisture content in this report are based on the latest American Society for Testing and Materials (ASTM) D1557 Test Procedure. Structural building pad areas should extend a minimum of five feet horizontally beyond the outside dimensions of structures, including footings and overhangs carrying structural loads.

6.5.3 Prior to commencing grading, a pre-construction conference with representatives of the client, grading contractor, and Geocon should be held at the site. Site preparation, soil handling and/or the grading plans should be discussed at the pre-construction conference.

6.5.4 Site preparation within proposed improvement areas should begin with removal of grass and organic-rich topsoil. Excavations or depressions resulting from site clearing operations, or other existing excavations or depressions, should be restored with engineered fill in accordance with the recommendations of this report.

6.5.5 Proposed improvement areas, cut bottoms, areas to receive fill, or areas left at-grade should be thoroughly scarified at least 10 to 12 inches, moisture conditioned at or near the optimum moisture content, and uniformly compacted to at least 90% relative compaction at or above optimum moisture content. Our representative should observe site clearing, scarification, watering, and re-compaction operations to evaluate performance of the subgrade under compaction equipment loading and to identify any areas that may require additional removals.

6.5.6 Engineered fill should be compacted in horizontal lifts not exceeding eight inches (loose thickness) and brought to final design elevations. Each lift should be thoroughly moisture conditioned at or near optimum moisture content and uniformly compacted to at least 90% relative compaction.

6.5.7 The upper 12 inches of soil subgrade in flatwork / hardscape areas, whether completed at-grade, by excavation, or by filling, should be uniformly moisture-conditioned at or above optimum moisture content and compacted to at least 90% relative compaction.

6.5.8 Final pavement subgrade, whether completed at-grade, by excavation, or by filling, should be uniformly moisture conditioned at or near optimum moisture content, uniformly compacted to at least 95% relative compaction, and be stable. The 95% relative compaction requirement applies to the top six inches of pavement area subgrade; however, underlying materials must be sufficiently compacted and stable. We recommend proof-rolling the subgrade with a loaded water truck (or similar equipment with high contact pressure) to verify the stability of the subgrade prior to placing aggregate base (AB). We note that deeper scarification, moisture-conditioning, and compaction efforts may be required in order to achieve overall stability and compaction.

6.5.9 Underground utility trenches within structural areas should be backfilled with properly compacted material. Pipe bedding, shading, and backfill should conform to the requirements of the appropriate utility authority. Material excavated from trenches should be adequate for

FOR COUNCIL APPROVAL ONLY

use as general backfill above shading provided it does not contain deleterious matter, vegetation or cementations larger than six inches in maximum dimension. Trench backfill should be placed in loose lifts not exceeding eight inches. Lifts should be compacted to a minimum of 90% relative compaction at or above optimum moisture content. Compaction should be performed by mechanical means only; jetting of trench backfill is not recommended.

6.6 Foundations – Spread Footings / CIDH Concrete Piers

6.6.1 The proposed play equipment and shade structures/canopies may be supported on conventional spread footings or CIDH concrete piers. Given the variably granular (sandy) soil conditions in the top 5 feet, spread footings may be preferable since sloughing and caving may occur in CIDH pier excavations.

6.6.2 Spread footings should be at least 18 inches square and be embedded at least 18 inches below lowest adjacent pad grade. Underground utilities running parallel to footings should not be constructed in the zone of influence of footings. The zone of influence may be taken to be the area within 18 inches laterally of the footing, beneath the footings, and within a 1H:1V plane extending out and down from the bottom corner of the footing.

6.6.3 Spread footings may be designed using an allowable "net" soil bearing capacity of 2,000 pounds per square foot (psf) for combined dead plus live loads. This value may be increased by one-third to evaluate all loads, including wind or seismic forces.

6.6.4 Allowable passive pressure used to resist lateral movement of footings may be assumed to be equal to a fluid weighing 300 pounds per cubic foot (pcf). The allowable coefficient of friction to resist sliding of footings is 0.30 for concrete against soil. Combined passive resistance and friction may be utilized for footing design provided that the frictional resistance is reduced by 50%.

6.6.5 A Geocon representative should observe foundation excavations prior to placing reinforcing steel or concrete to observe that the exposed soil conditions are consistent with those anticipated. If unanticipated soil conditions are encountered, foundation modifications may be required.

6.6.6 CIDH concrete piers should have a minimum diameter of 18 inches, a minimum embedment depth of 6 feet, and be designed using an allowable unit skin friction of 400 psf to resist vertical downward loads. An allowable unit skin friction of 275 psf plus the

FOR COUNCIL APPROVAL ONLY

weight of the pier may be used to resist uplift loads. The allowable downward capacity and allowable uplift capacity may be increased by one-third when considering transient wind or seismic loads. Piers should have a minimum center-to-center spacing of at least three pier diameters. The top 12 inches of embedment should be neglected when calculating axial compression and tension capacities.

6.6.7 Allowable passive pressure used to resist lateral movement of the piers may be assumed to be equal to a fluid weighing 300 pcf with a maximum earth pressure of 3,000 psf. The allowable passive pressure may be applied over two pier diameters for isolated piers with a minimum center-to-center spacing of at least three pier diameters. The allowable passive pressure assumes a horizontal surface extending at least 5 feet or three times the surface generating the passive pressure, whichever is greater. The upper 12 inches of embedment should not be included in the design for lateral resistance.

6.6.8 The bottom of pier excavations should be cleaned of loose cuttings prior to the placement of steel and concrete. Experience indicates that backspinning the auger does not remove loose material, and a flat cleanout plate is necessary. Concrete should be placed within the excavation as soon as possible after the auger/cleanout plate is withdrawn to reduce the potential for caving.

6.6.9 A Geocon representative should be present during pier drilling to confirm that subsurface conditions encountered are consistent with those expected. If unexpected conditions are encountered, foundation modifications may be required.

FOR COUNCIL APPROVAL ONLY

6.7 Concrete Sidewalks and Flatwork

6.7.1 Sidewalk, curb, and gutter within County right-of-way should be designed and constructed in accordance with the latest City of Roseville standards and details as applicable.

6.7.2 On-site exterior concrete flatwork will likely experience seasonal movement. Therefore, some cracking and/or vertical offset should be anticipated. We are providing the following recommendations to reduce distress to concrete flatwork. Recommendations include moisture conditioning subgrade soils and providing adequate construction and control joints. It should be noted that even with implementation of these measures, slab movement or cracking could still occur.

- Concrete flatwork and sidewalks should be at least six inches thick and may be placed directly on subgrade soil compacted to at least 90 percent relative compaction. If desired, a 4-inch layer of Class 2 AB compacted to 95 percent relative compaction may be placed below the concrete flatwork in order to provide a firm base. In addition, doweling could be provided at joints to reduce the potential for vertical offset.

- The upper six inches of subgrade soil for exterior flatwork and sidewalks should be uniformly moisture-conditioned at or above optimum moisture content and compacted to at least 90 percent relative compaction prior to placing AB (if used).

- We recommend using construction and control joints in accordance with ACI and/or PCA guidelines. Construction joints that abut building foundations should include a felt strip, or approved equivalent, that extends the full depth of the exterior slab. Exterior slabs should be structurally independent of building foundations except at doorways, where vertical movement could impact doorway operation.

6.8 Pavement - Hot Mix Asphalt

6.8.1 We performed Resistance-Value (R-Value) testing on representative bulk soil sample at the site in accordance with California Test Method (CTM) 301. Our testing resulted in an R-Value of 39. To account for subgrade soil variability resulting from site grading, we recommend using a maximum R-Value of 30 for pavement design.

6.8.2 The project civil engineer should determine the appropriate Traffic Index (TI) for pavement design. Table 6.8.2 provides alternative pavement sections based on the design methods of Caltrans' Highway Design Manual for various TIs. We can provide additional section designs upon request.

FOR COUNCIL APPROVAL ONLY

TABLE 6.8.2
FLEXIBLE PAVEMENT SECTIONS

Traffic Index	5.0	6.0	6.5	7.0
HMA (in.)	3.0	3.5	4.5	5.5
AB (in.)	5.0	7.0	7.0	7.0
Total Section Thickness (in.)	8.0	10.5	11.5	12.5

6.8.3 The recommended alternative pavement sections are based on the following assumptions:

1. Subgrade soil has an R-Value of at least 30.

2. Class 2 AB has a minimum R-Value of 78 and meets the requirements of Section 26 of Caltrans' latest *Standard Specifications*.

3. Class 2 AB is compacted to 95 percent or higher relative compaction at or near optimum moisture content. Prior to placing HMA, the AB should be proof rolled with a loaded water truck to verify stability.

4. Pavement subgrade should be compacted in accordance with the recommendations presented in this report.

5. HMA should conform to Section 39 of Caltrans' latest *Standard Specifications*.

6. Periodic maintenance of HMA pavements is performed.

6.8.4 To reduce the potential for water from landscaped areas migrating under pavement into the AB, consideration should be given to using full-depth curbs in areas where pavement abuts irrigated landscaping. The full-depth curbs should extend at least six inches or more into the soil subgrade beneath the AB. Alternatively, modified drop-inlets that contain weepholes may be used to encourage accumulated water to drain from beneath the pavement.

6.9 Pavement - Rigid Concrete

6.9.1 If rigid Portland Concrete Cement (PCC) pavement is used in automobile and light-truck traffic areas, we recommend that the concrete be at least 6 inches thick. PCC pavement should be underlain by at least 6 inches of Class 2 AB meeting the requirements of Section 26 of Caltrans' Standard Specifications and compacted to at least 95% relative compaction. Subgrade soils should be prepared and compacted in accordance with the recommendations of this report.

6.9.2 Steel reinforcement, if used, should be detailed in accordance with PCA, ACI, or similar guidelines. Alternatively, macro synthetic fibers (Euclid Chemical Tuf-Strand SF or equivalent) mixed into the concrete mix may be considered in lieu of conventional steel reinforcement provided it meets the requirements of ASTM C1116 and ASTM D7508 for Type III Synthetic Fibers.

6.9.3 Adequate dowels should also be used at joints to facilitate load transfer and reduce vertical offset. In addition, the recommendations in Section 6.10 pertaining to adequate drainage apply to concrete pavements, sidewalks, and flatwork, as well as asphalt pavements.

6.9.4 In general, we recommend that concrete pavements be detailed, designed, constructed, and maintained in accordance with industry standards such as those provided by the ACI and PCA.

FOR COUNCIL APPROVAL ONLY

6.10 Site Drainage and Moisture Protection

6.10.1 Adequate site drainage is critical to reduce the potential for differential soil movement, soil expansion, erosion and subsurface seepage. Under no circumstances should water be allowed to pond adjacent to building foundations. The site should be graded and maintained such that surface drainage is directed away from structures in accordance with the 2022 CBC or other applicable standards. In addition, surface drainage should be directed away from the top of slopes into swales or other controlled drainage devices.

6.10.2 Underground utilities should be leak free. Utility and irrigation lines should be checked periodically for leaks, and detected leaks should be repaired promptly. Detrimental soil movement could occur if water is allowed to infiltrate the soil for prolonged periods of time.

6.10.3 We recommend use of area drains to collect excess irrigation water and transmit it to drainage structures or impervious above-grade planter boxes. In addition, where landscaping is planned adjacent to the pavement or flatwork, we recommend construction of a cutoff wall (deepened curb) along the edge of the pavement/flatwork that extends at least four inches into the soil subgrade below the bottom of the base material.

6.10.4 Experience has shown that even with these provisions, subsurface seepage may develop in areas where no such water conditions existed prior to site development. This is particularly true where a substantial increase in surface water infiltration has resulted from an increase in landscape irrigation.

FOR COUNCIL APPROVAL ONLY

7.0 FURTHER GEOTECHNICAL SERVICES

7.1 Plan and Specification Review

7.1.1 Geocon should review the foundation and grading plans prior to final design submittal to assess whether our recommendations have been properly implemented and evaluate if additional analysis and/or recommendations are required.

7.2 Testing and Observation Services

7.2.1 The recommendations provided in this report are based on the assumption that we will continue as Geotechnical Engineer of Record (GER) throughout the construction phase and provide construction observation and testing services. Providing these services during construction are important in order to maintain continuity of geotechnical interpretation and confirm that field conditions encountered are similar to those anticipated during design. If we are not retained for these services, we cannot assume any responsibility for other's interpretation of our recommendations or the future performance of the project.

FOR COUNCIL APPROVAL ONLY

8.0 LIMITATIONS AND UNIFORMITY OF CONDITIONS

The recommendations of this report pertain only to the site investigated and are based upon the assumption that the soil conditions do not deviate from those disclosed in the investigation. If any variations or undesirable conditions are encountered during construction, or if the proposed construction will differ from that anticipated herein, we should be notified so that supplemental recommendations can be given. The evaluation or identification of the potential presence of hazardous materials or environmental contamination was not part of our scope of services.

This report is issued with the understanding that it is the responsibility of the owner or their representative to ensure that the information and recommendations contained herein are brought to the attention of the design team for the project and incorporated into the plans and specifications and the necessary steps are taken to see that the contractor and subcontractors carry out such recommendations in the field.

The recommendations contained in this report are preliminary until verified during construction by representatives of our firm. Changes in the conditions of a property can occur with the passage of time, whether they are due to natural processes or the works of man on this or adjacent properties. Additionally, changes in applicable or appropriate standards may occur, whether they result from legislation or the broadening of knowledge. Accordingly, the findings of this report may be invalidated partially or wholly by changes outside our control. Therefore, this report is subject to review and should not be relied upon after a period of three years.

Our professional services were performed, our findings obtained, and our recommendations prepared in accordance with generally accepted geotechnical engineering principles and practices used in the site area at this time. No warranty is provided, express or implied.

FOR COUNCIL APPROVAL ONLY

9.0 REFERENCES

1. American Concrete Institute, ACI 318-19, *Building Code Requirements for Structural Concrete and Commentary*, 2019.

2. American Society of Civil Engineers, *ASCE 7-16 Minimum Design Loads for Buildings and Other Structures*, 2017.

3. California Building Standards Commission, *2022 California Building Code*, based on *2021 International Building Code*, International Code Council.

4. California Department of Transportation (Caltrans), *Corrosion Guidelines* (Version 3.2), May 2021.

5. Caltrans, *Standard Specifications, Section 26*, 2024.

6. City of Roseville, *CO-61 Masterplan, Drawn by: J.R.C.,* March 2025.

7. Gutierrez, C.I. (compilation and digital preparation), *Preliminary Geologic Map of the Sacramento 30' x 60' Quadrangle, California,* California Geological Survey, 2011.

8. Hart, Earl W., Bryant, William A. "Alquist-Priolo Earthquake Fault Zone Program." California Division of Mines and Geology, 1999.

9. Jennings, C.W. (compiler), *Fault Map of California*, California Division of Mines and Geology, 1982.

10. Moron & Pitalo, Inc., *Grading Only Plans for CO-61 Park Grading, HP Master Plan, Roseville, California,* Sheets C-1 through C-3, March 22, 2023.

11. Portland Cement Association, *Concrete Floors on Ground*, 2001.

12. Structural Engineers Association of California (SEAOC) and Office of Statewide Health Planning and Development (OSHPD), Seismic Design Maps, https://seismicmaps.org/, accessed November 3, 2025.

13. United States Geological Survey, Unified Hazard Tool https://earthquake.usgs.gov/hazards/interactive/.

14. Unpublished reports, aerial photographs, and maps on file with Geocon.

FOR COUNCIL APPROVAL ONLY

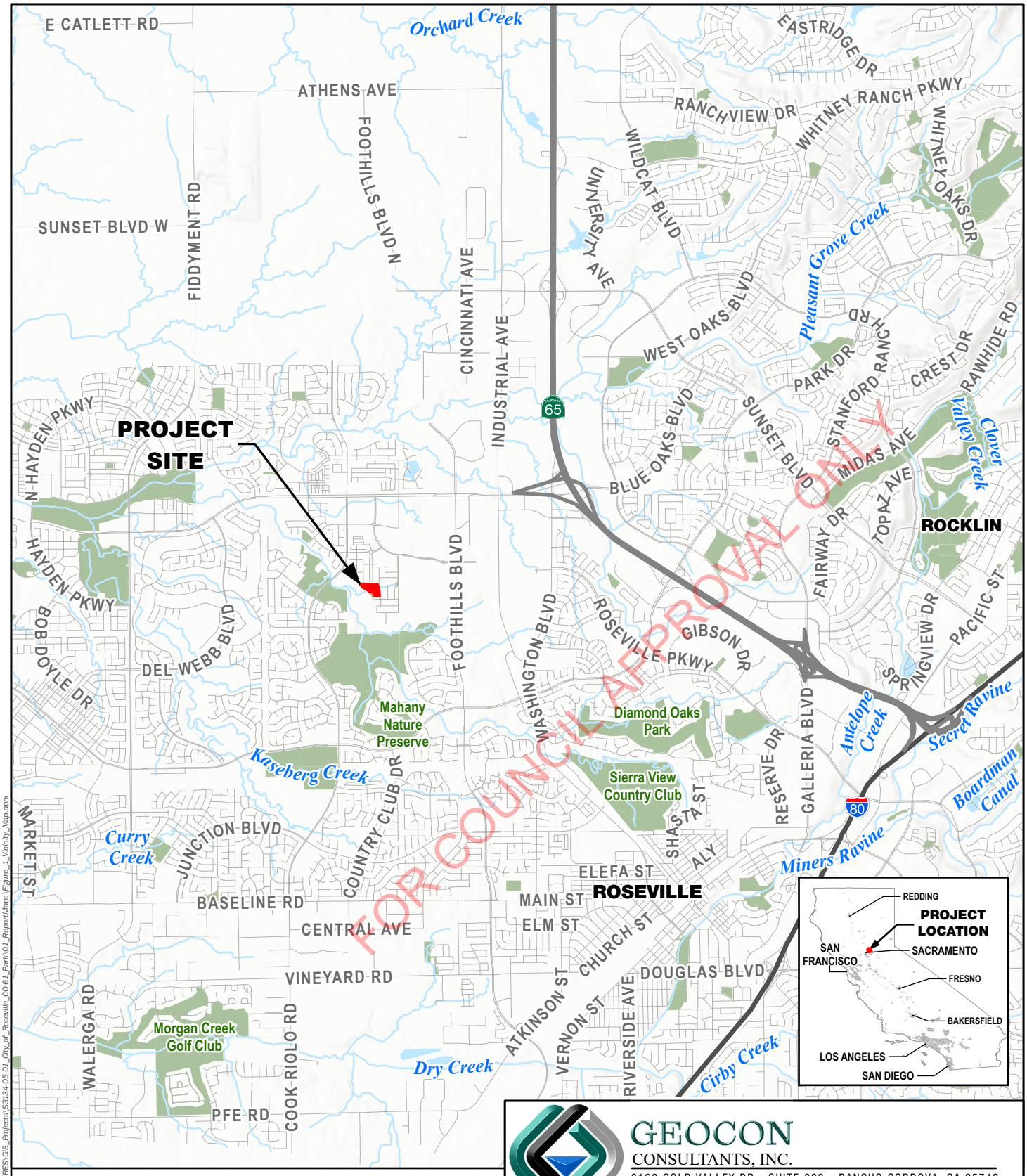

GEOCON CONSULTANTS, INC.
3160 GOLD VALLEY DR - SUITE 800 - RANCHO CORDOVA, CA 95742
PHONE 916.852.9118 - FAX 916.852.9132

City of Roseville CO-61 Park
5125 Ashbrook Street
Roseville, California

VICINITY MAP

S3134-05-01	December 2025	Figure 1

GEOCON 12/1/2025 USER Brown M PATH R:\FIGURES\GIS_Projects\S3134-05-01_City_of_Roseville_CO-61_Park\01_ReportMaps\Figure_1_Vicinity_Map.aprx



Legend

TP4 Approximate Test Pit Location

Approximate Site Boundary

N

0 80

Scale in Feet

GEOCON CONSULTANTS, INC.
3160 GOLD VALLEY DR - SUITE 800 - RANCHO CORDOVA, CA 95742
PHONE 916.852.9118 - FAX 916.852.9132

City of Roseville CO-61 Park

5125 Ashbrook Street
Roseville, California

SITE PLAN

S3134-05-01	December 2025	Figure 2

GEOCON 11/3/2025 USER Goins B PATH C:\Users\Goins B\OneDrive - Geocon, Inc\GIS\Projects\S3134-05-01_City_of_Roseville_CO-61_Park\01_ReportMaps\Figure_2_Site_Plan.aprx



Legend

TP4 — Approximate Test Pit Location

Approximate Site Boundary

Proposed Development Plan by J.R.C (03/2025)

N

0 80

Scale in Feet

GEOCON
CONSULTANTS, INC.
3160 GOLD VALLEY DR - SUITE 800 - RANCHO CORDOVA, CA 95742
PHONE 916.852.9118 - FAX 916.852.9132

City of Roseville CO-61 Park

5125 Ashbrook Street
Roseville, California

PROPOSED DEVELOPMENT PLAN

S3134-05-01	December 2025	Figure 3

GEOCON 9/24/2025 USER Gains,B PATH C:\Users\Gains.B\OneDrive - Geocon, Inc\GIS\Projects\S3134-05-01_City_of_Roseville_CO61_Park\01_Report\Maps\Figure 2_Site_Plan.aprx

APPENDIX A

FOR COUNCIL APPROVAL ONLY

APPENDIX A

FIELD EXPLORATION

We performed our geotechnical field exploration on September 9, 2025. Our field exploration program consisted of performing four test pits (TP1 through TP4) at the approximate locations depicted on the Site Plan, Figure 2 and Proposed Development Plan, Figure 3.

The test pits were excavated using a rubber-tire John Deere 310G backhoe equipped with an 18-inch-wide bucket. Upon completion, the test pits were backfilled with the excavated soil.

We visually examined, classified, and logged the subsurface conditions in the test pits in general accordance with the American Society for Testing and Materials (ASTM) Practice for Description and Identification of Soils (Visual-Manual Procedure D2488-17). This system uses the Unified Soil Classification System (USCS) for soil designations. The logs depict soil and geologic conditions encountered and depths at which we obtained samples. The logs also include our interpretation of the conditions between sampling intervals. Therefore, the logs contain both observed and interpreted data. We determined the lines designating the interface between soil materials on the logs using visual observations, drill rig penetration rates, excavation characteristics, and other factors. The transition between materials may be abrupt or gradual. Where applicable, we revised the field logs based on subsequent laboratory testing. Logs of test pits are presented herein.

FOR COUNCIL APPROVAL ONLY

UNIFIED SOIL CLASSIFICATION

MAJOR DIVISIONS			TYPICAL NAMES	
COARSE-GRAINED SOILS (MORE THAN HALF IS COARSER THAN NO. 200 SIEVE)	GRAVELS (MORE THAN HALF COARSE FRACTION IS LARGER THAN NO.4 SIEVE SIZE)	CLEAN GRAVELS WITH LITTLE OR NO FINES	GW	WELL GRADED GRAVELS WITH OR WITHOUT SAND, LITTLE OR NO FINES
			GP	POORLY GRADED GRAVELS WITH OR WITHOUT SAND, LITTLE OR NO FINES
		GRAVELS WITH OVER 12% FINES	GM	SILTY GRAVELS, SILTY GRAVELS WITH SAND
			GC	CLAYEY GRAVELS, CLAYEY GRAVELS WITH SAND
	SANDS (MORE THAN HALF COARSE FRACTION IS SMALLER THAN NO.4 SIEVE SIZE)	CLEAN SANDS WITH LITTLE OR NO FINES	SW	WELL GRADED SANDS WITH OR WITHOUT GRAVEL, LITTLE OR NO FINES
			SP	POORLY GRADED SANDS WITH OR WITHOUT GRAVEL, LITTLE OR NO FINES
		SANDS WITH OVER 12% FINES	SM	SILTY SANDS WITH OR WITHOUT GRAVEL
			SC	CLAYEY SANDS WITH OR WITHOUT GRAVEL
FINE-GRAINED SOILS (MORE THAN HALF IS FINER THAN NO. 200 SIEVE)	SILTS AND CLAYS (LIQUID LIMIT 50% OR LESS)		ML	INORGANIC SILTS AND VERY FINE SANDS, ROCK FLOUR, SILTS WITH SANDS AND GRAVELS
			CL	INORGANIC CLAYS OF LOW TO MEDIUM PLASTICITY, CLAYS WITH SANDS AND GRAVELS, LEAN CLAYS
			OL	ORGANIC SILTS OR CLAYS OF LOW PLASTICITY
	SILTS AND CLAYS (LIQUID LIMIT GREATER THAN 50%)		MH	INORGANIC SILTS, MICACEOUS OR DIATOMACEOUS, FINE SANDY OR SILTY SOILS, ELASTIC SILTS
			CH	INORGANIC CLAYS OF HIGH PLASTICITY, FAT CLAYS
			OH	ORGANIC CLAYS OR CLAYS OF MEDIUM TO HIGH PLASTICITY
	HIGHLY ORGANIC SOILS		PT	PEAT AND OTHER HIGHLY ORGANIC SOILS

BORING/TRENCH LOG LEGEND

- No Recovery (NOREC)
- Chunk Sample (CHK)
- Shelby Tube Sample (ST)
- Bulk Sample (B)
- Standard Penetration Test Sample (SPT)
- Modified California Sample (MC)
- Continuous Push (CP)
- Groundwater Level (At Time of Drilling)
- Groundwater Level (After Drilling)
- Groundwater Level (Seepage Encountered)

PENETRATION RESISTANCE

SAND AND GRAVEL			SILT AND CLAY			
RELATIVE DENSITY	BLOWS PER FOOT (SPT)*	BLOWS PER FOOT (MOD-CAL)*	CONSISTENCY	BLOWS PER FOOT (SPT)*	BLOWS PER FOOT (MOD-CAL)*	COMPRESSIVE STRENGTH (tsf)
VERY LOOSE	0 - 4	0 - 6	VERY SOFT	0 - 2	0 - 3	0 - 0.25
LOOSE	5 - 10	7 - 16	SOFT	3 - 4	4 - 6	0.25 - 0.50
MEDIUM DENSE	11 - 30	17 - 48	MEDIUM STIFF	5 - 8	7 - 13	0.50 - 1.0
DENSE	31 - 50	49 - 79	STIFF	9 - 15	14 - 24	1.0 - 2.0
VERY DENSE	OVER 50	OVER 79	VERY STIFF	16 - 30	25 - 48	2.0 - 4.0
			HARD	OVER 30	OVER 48	OVER 4.0

*NUMBER OF BLOWS OF 140 LB HAMMER FALLING 30 INCHES TO DRIVE LAST 12 INCHES

MOISTURE DESCRIPTIONS

FIELD TEST	APPROX. DEGREE OF SATURATION, S (%)	DESCRIPTION
NO INDICATION OF MOISTURE; DRY TO THE TOUCH	S<25	DRY
SLIGHT INDICATION OF MOISTURE	25≤S<50	DAMP
INDICATION OF MOISTURE; NO VISIBLE WATER	50≤S<75	MOIST
MINOR VISIBLE FREE WATER	75≤S<100	WET
VISIBLE FREE WATER	100	SATURATED

QUANTITY DESCRIPTIONS

APPROX. ESTIMATED PERCENT	DESCRIPTION
<5%	TRACE
5 - 10%	FEW
11 - 25%	LITTLE
26 - 50%	SOME
>50%	MOSTLY

GRAVEL/COBBLE/BOULDER DESCRIPTIONS

CRITERIA	DESCRIPTION
PASS THROUGH A 3-INCH SIEVE AND BE RETAINED ON A NO. 4 SIEVE (#4 TO 3")	GRAVEL
PASS A 12-INCH SQUARE OPENING AND BE RETAINED ON A 3-INCH SIEVE (3"-12")	COBBLE
WILL NOT PASS A 12-INCH SQUARE OPENING (>12")	BOULDER

BEDDING SPACING DESCRIPTIONS

THICKNESS/SPACING	DESCRIPTOR
GREATER THAN 10 FEET	MASSIVE
3 TO 10 FEET	VERY THICKLY BEDDED
1 TO 3 FEET	THICKLY BEDDED
3 ⅛-INCH TO 1 FOOT	MODERATELY BEDDED
1 ⅛-INCH TO 3 ⅛-INCH	THINLY BEDDED
⅜-INCH TO 1 ⅛-INCH	VERY THINLY BEDDED
LESS THAN ⅜-INCH	LAMINATED

STRUCTURE DESCRIPTIONS

CRITERIA	DESCRIPTION
ALTERNATING LAYERS OF VARYING MATERIAL OR COLOR WITH LAYERS AT LEAST ¼-INCH THICK	STRATIFIED
ALTERNATING LAYERS OF VARYING MATERIAL OR COLOR WITH LAYERS LESS THAN ¼-INCH THICK	LAMINATED
BREAKS ALONG DEFINITE PLANES OF FRACTURE WITH LITTLE RESISTANCE TO FRACTURING	FISSURED
FRACTURE PLANES APPEAR POLISHED OR GLOSSY, SOMETIMES STRIATED	SLICKENSIDED
COHESIVE SOIL THAT CAN BE BROKEN DOWN INTO SMALLER ANGULAR LUMPS WHICH RESIST FURTHER BREAKDOWN	BLOCKY
INCLUSION OF SMALL POCKETS OF DIFFERENT SOIL, SUCH AS SMALL LENSES OF SAND SCATTERED THROUGH A MASS OF CLAY	LENSED
SAME COLOR AND MATERIAL THROUGHOUT	HOMOGENOUS

CEMENTATION/INDURATION DESCRIPTIONS

FIELD TEST	DESCRIPTION
CRUMBLES OR BREAKS WITH HANDLING OR LITTLE FINGER PRESSURE	WEAKLY CEMENTED/INDURATED
CRUMBLES OR BREAKS WITH CONSIDERABLE FINGER PRESSURE	MODERATELY CEMENTED/INDURATED
WILL NOT CRUMBLE OR BREAK WITH FINGER PRESSURE	STRONGLY CEMENTED/INDURATED

IGNEOUS/METAMORPHIC ROCK STRENGTH DESCRIPTIONS

FIELD TEST	DESCRIPTION
MATERIAL CRUMBLES WITH BARE HAND	WEAK
MATERIAL CRUMBLES UNDER BLOWS FROM GEOLOGY HAMMER	MODERATELY WEAK
⅛-INCH INDENTATIONS WITH SHARP END FROM GEOLOGY HAMMER	MODERATELY STRONG
HAND-HELD SPECIMEN CAN BE BROKEN WITH **ONE** BLOW FROM GEOLOGY HAMMER	STRONG
HAND-HELD SPECIMEN CAN BE BROKEN WITH **COUPLE** BLOWS FROM GEOLOGY HAMMER	VERY STRONG
HAND-HELD SPECIMEN CAN BE BROKEN WITH **MANY** BLOWS FROM GEOLOGY HAMMER	EXTREMELY STRONG

IGNEOUS/METAMORPHIC ROCK WEATHERING DESCRIPTIONS

DEGREE OF DECOMPOSITION	FIELD RECOGNITION	ENGINEERING PROPERTIES
SOIL	DISCOLORED, CHANGED TO SOIL, FABRIC DESTROYED	EASY TO DIG
COMPLETELY WEATHERED	DISCOLORED, CHANGED TO SOIL, FABRIC MAINLY PRESERVED	EXCAVATED BY HAND OR RIPPING (Saprolite)
HIGHLY WEATHERED	DISCOLORED, HIGHLY FRACTURED, FABRIC ALTERED AROUND FRACTURES	EXCAVATED BY HAND OR RIPPING, WITH SLIGHT DIFFICULTY
MODERATELY WEATHERED	DISCOLORED, FRACTURES, INTACT ROCK-NOTICEABLY WEAKER THAN FRESH ROCK	EXCAVATED WITH DIFFICULTY WITHOUT EXPLOSIVES
SLIGHTLY WEATHERED	MAY BE DISCOLORED, SOME FRACTURES, INTACT ROCK-NOT NOTICEABLY WEAKER THAN FRESH ROCK	REQUIRES EXPLOSIVES FOR EXCAVATION, WITH PERMEABLE JOINTS AND FRACTURES
FRESH	NO DISCOLORATION, OR LOSS OF STRENGTH	REQUIRES EXPLOSIVES

IGNEOUS/METAMORPHIC ROCK JOINT/FRACTURE DESCRIPTIONS

FIELD TEST	DESCRIPTION
NO OBSERVED FRACTURES	UNFRACTURED/UNJOINTED
MAJORITY OF JOINTS/FRACTURES SPACED AT 1 TO 3 FOOT INTERVALS	SLIGHTLY FRACTURED/JOINTED
MAJORITY OF JOINTS/FRACTURES SPACED AT 4-INCH TO 1 FOOT INTERVALS	MODERATELY FRACTURED/JOINTED
MAJORITY OF JOINTS/FRACTURES SPACED AT 1-INCH TO 4-INCH INTERVALS WITH SCATTERED FRAGMENTED INTERVALS	INTENSELY FRACTURED/JOINTED
MAJORITY OF JOINTS/FRACTURES SPACED AT LESS THAN 1-INCH INTERVALS; MOSTLY RECOVERED AS CHIPS AND FRAGMENTS	VERY INTENSELY FRACTURED/JOINTED

FOR COUNCIL APPROVAL ONLY

GEOCON

KEY TO LOGS

GEOCON

Test PitNumber: TP1

PROJECT NAME CO-61 Park
LOGGED BY Tyler Henderson
PROJECT NUMBER S3134-05-01
LATITUDE / LONGITUDE 38.785601, -121.324984
DATE STARTED 09/09/2025 **COMPLETED** 09/09/2025
DEPTH 10.5' **SURFACE ELEVATION** ~109.9'
LOCATION Roseville, CA
RIG TYPE 310-G Deere
DRILLING FIRM Geocon Consultants, Inc
HAMMER TYPE -
METHOD Backhoe **BORING DIAMETER** -
HAMMER WEIGHT -
BACKFILL METHOD Excavated soil
HAMMER DROP -

Depth (ft)	Graphic Log	USCS	Water Levels	Material Description	Sample Information: Sample Graphic	Sample Information: Sample Type	Sample Information: Sample Number	Sample Information: Blow Counts/6"	Sample Information: Penetration Resistance (blows/foot)	Laboratory Results: Moisture Content (%)
		SC		**ALLUVIUM** Medium dense, dry, light brown, **Clayey SAND**, fine to coarse grained		Bulk	TP1-Bulk			
				Damp to Moist						
				Moist						15.1
		CL		Very stiff, moist, gray, **Sandy LEAN CLAY**, fine to coarse grained, with trace gravel, fine to coarse grained; organics odor						
5						Bulk	TP1-2			
						Bulk	TP1-4			
				Increase in sand quantity, trace rootlets						
		SC		Dense to very dense, damp, brown with black mottling, **Clayey SAND**, fine to coarse grained, weakly cemented; hard pan						
		SP		Dense, moist, brown, **Poorly Graded SAND**, fine to coarse grained, with trace gravel, fine to medium grained		Bulk	TP1-8.5			
10				With Trace lean clay						
				Test Pit Terminated						

FOR COUNCIL APPROVAL ONLY

Water Levels

▽ No free water encountered on 09/09

▼ -

NOTE: THE LOG OF SUBSURFACE CONDITIONS SHOWN APPLIES ONLY TO THE SPECIFIC BORING OR TRENCH LOCATION AT THE DATE INDICATED AND MIGHT NOT REPRESENT SUBSURFACE CONDITIONS AT OTHER LOCATIONS OR TIMES. THE STRATIGRAPHY PRESENTED REPRESENTS THE APPROXIMATE BOUNDARY BETWEEN SOIL TYPES; THESE TRANSITIONS COULD BE

GEOCON

Test PitNumber: TP2

PROJECT NAME CO-61 Park
LOGGED BY Tyler Henderson
PROJECT NUMBER S3134-05-01
LATITUDE / LONGITUDE 38.785437, -121.325342
DATE STARTED 09/09/2025 **COMPLETED** 09/09/2025
DEPTH 10.5' **SURFACE ELEVATION** ~112.0'
LOCATION Roseville, CA
RIG TYPE 310G Deere
DRILLING FIRM Geocon Consultants, Inc
HAMMER TYPE -
METHOD Backhoe **BORING DIAMETER** -
HAMMER WEIGHT -
BACKFILL METHOD Excavated soil
HAMMER DROP -

Depth (ft)	Graphic Log	USCS	Water Levels	Material Description	Sample Information: Sample Graphic	Sample Type	Sample Number	Blow Counts/6"	Penetration Resistance (blows/foot)	Laboratory Results: Moisture Content (%)	% Fines	Atterberg Limits
		SC		**ALLUVIUM** Medium dense, dry, light brown, **Clayey SAND**, fine to coarse grained		Bulk	TP2-Bulk					
				Damp, brown								
				Moist						8.6		
		CL		Very stiff, moist, brown, **LEAN CLAY**, with sand, fine grained							77.91	LL: 47 PI: 26
5						Bulk	TP2-3					
						Bulk	TP2-4.5					
		SC		Medium dense, moist, olive brown, **Clayey SAND**, fine to coarse grained								
				Dense to very dense, weakly to moderately cemented; hardpan, excavates in small chunks		Bulk	TP2-7.5					
10				Olive brown with gray; increase in moisture content		Bulk	TP2-9.5					
				Test Pit Terminated								

FOR COUNCIL APPROVAL ONLY

Water Levels

▽ No free water encountered on 09/09

▼ -

NOTE: THE LOG OF SUBSURFACE CONDITIONS SHOWN APPLIES ONLY TO THE SPECIFIC BORING OR TRENCH LOCATION AT THE DATE INDICATED AND MIGHT NOT REPRESENT SUBSURFACE CONDITIONS AT OTHER LOCATIONS OR TIMES. THE STRATIGRAPHY PRESENTED REPRESENTS THE APPROXIMATE BOUNDARY BETWEEN SOIL TYPES; THESE TRANSITIONS COULD BE

GEOCON

Test PitNumber: TP3

PROJECT NAME CO-61 Park
LOGGED BY Tyler Henderson
PROJECT NUMBER S3134-05-01
LATITUDE / LONGITUDE 38.785693, -121.325232
DATE STARTED 09/09/2025 **COMPLETED** 09/09/2025
DEPTH 11.5' **SURFACE ELEVATION** ~111.5'
LOCATION Roseville, CA
RIG TYPE 310G Deere
DRILLING FIRM Geocon Consultants, Inc
HAMMER TYPE -
METHOD Backhoe **BORING DIAMETER** -
HAMMER WEIGHT -
BACKFILL METHOD Excavated soil
HAMMER DROP -

Depth (ft)	Graphic Log	USCS	Water Levels	Material Description	Sample Information: Sample Graphic	Sample Type	Sample Number	Blow Counts/6"	Penetration Resistance (blows/foot)
		SC		**ALLUVIUM** Medium dense, dry, light brown, **Clayey SAND**, fine to coarse grained, with trace gravel, fine grained		Bulk	TP3-Bulk		
				Moist, brown					
5				Damp, reddish brown		Bulk	TP3-3		
10		CL		Very stiff to very hard, moist, gray, **Sandy LEAN CLAY**, fine grained, with trace gravel, fine grained		Bulk	TP10.5		
				Test Pit Terminated					

FOR COUNCIL APPROVAL ONLY

Water Levels

▽ No free water encountered on 09/09

▼ -

NOTE: THE LOG OF SUBSURFACE CONDITIONS SHOWN APPLIES ONLY TO THE SPECIFIC BORING OR TRENCH LOCATION AT THE DATE INDICATED AND MIGHT NOT REPRESENT SUBSURFACE CONDITIONS AT OTHER LOCATIONS OR TIMES. THE STRATIGRAPHY PRESENTED REPRESENTS THE APPROXIMATE BOUNDARY BETWEEN SOIL TYPES; THESE TRANSITIONS COULD BE

GEOCON

Test PitNumber: TP4

PROJECT NAME CO-61 Park
LOGGED BY Tyler Henderson
PROJECT NUMBER S3134-05-01
LATITUDE / LONGITUDE 38.785332, -121.325600
DATE STARTED 09/09/2025 **COMPLETED** 09/09/2025
DEPTH 10.5' **SURFACE ELEVATION** ~111.8'
LOCATION Roseville, CA
RIG TYPE 310G Deere
DRILLING FIRM Geocon Consultants, Inc
HAMMER TYPE -
METHOD Backhoe **BORING DIAMETER** -
HAMMER WEIGHT -
BACKFILL METHOD Excavated soil
HAMMER DROP -

Depth (ft)	Graphic Log	USCS	Water Levels	Material Description	Sample Information: Sample Graphic	Sample Information: Sample Type	Sample Information: Sample Number	Sample Information: Blow Counts/6"	Sample Information: Penetration Resistance (blows/foot)	Laboratory Results: Dry Density (pcf)	Laboratory Results: Moisture Content (%)
		SC		**UNDOCUMENTED FILL** Medium dense, dry, light brown, **Clayey SAND**		Bulk	TP4-Bulk			113.6	13.4
		CL		**ALLUVIUM** Very stiff, moist, dark brown, **Sandy LEAN CLAY**, fine grained							
5				Hard; Hardpan		Modified CA	TP4-2,2.5				
		SC		Dense, moist, olive brown with gray, **Clayey SAND**, fine to coarse grained		Bulk	TP4-6.5				
10				Test Pit Terminated							

FOR COUNCIL APPROVAL ONLY

Water Levels

▽ No free water encountered on 09/09

▼ -

NOTE: THE LOG OF SUBSURFACE CONDITIONS SHOWN APPLIES ONLY TO THE SPECIFIC BORING OR TRENCH LOCATION AT THE DATE INDICATED AND MIGHT NOT REPRESENT SUBSURFACE CONDITIONS AT OTHER LOCATIONS OR TIMES. THE STRATIGRAPHY PRESENTED REPRESENTS THE APPROXIMATE BOUNDARY BETWEEN SOIL TYPES; THESE TRANSITIONS COULD BE

APPENDIX B

FOR COUNCIL APPROVAL ONLY

APPENDIX B

LABORATORY TESTING PROGRAM

Laboratory tests were performed in accordance with generally accepted test methods of the American Society for Testing and Materials (ASTM) or other suggested procedures. Selected soil samples were tested for their in-place dry density and natural moisture content, plasticity index, grain size distribution, corrosion potential, expansion potential, pavement support characteristics, and moisture-density relationship. The results of the laboratory tests are presented below and on the following pages.

TABLE B1
EXPANSION INDEX TEST RESULTS
ASTM D4829

Sample Number	Depth (feet)	Moisture Content (%)		Expansion Index	Classification*
		Before Test	After Test		
TP2-Bulk	0 – 5	8.6	15	8	Very Low

**Expansion Potential Classification per ASTM D4829.*

TABLE B2
RESISTANCE VALUE TEST RESULTS
ASTM D2844

Sample Number	Depth (feet)	Average Dry Density (pcf)	Average Moisture Content (%)	R-Value
TP1-Bulk	0 – 5	112.5	14.4	39

FOR COUNCIL APPROVAL ONLY

GEOCON

Laboratory Results Summary

PROJECT CO-61 Park
LOCATION Roseville, CA
PROJECT NO. S3134-05-01
CLIENT Callander Associates

Boring ID	Sample ID	Depth (ft)	Moisture Content (%)	LL	PL	PI	% Fines	Dry Density (pcf)
TP2	TP2-4.5	4.5		47	21	26	77.91	
TP4	TP4-2.5	2.5	8.2					113.57
TP4	TP4-2	2	13.4					
TP1	TP1-2	2	15.1					
TP2	TP2-3	3	8.6					

FOR COUNCIL APPROVAL ONLY

ATTERBERG LIMITS TEST RESULTS

PROJECT CO-61 Park
LOCATION Roseville, CA
PROJECT NO. S3134-05-01
CLIENT Callander Associates

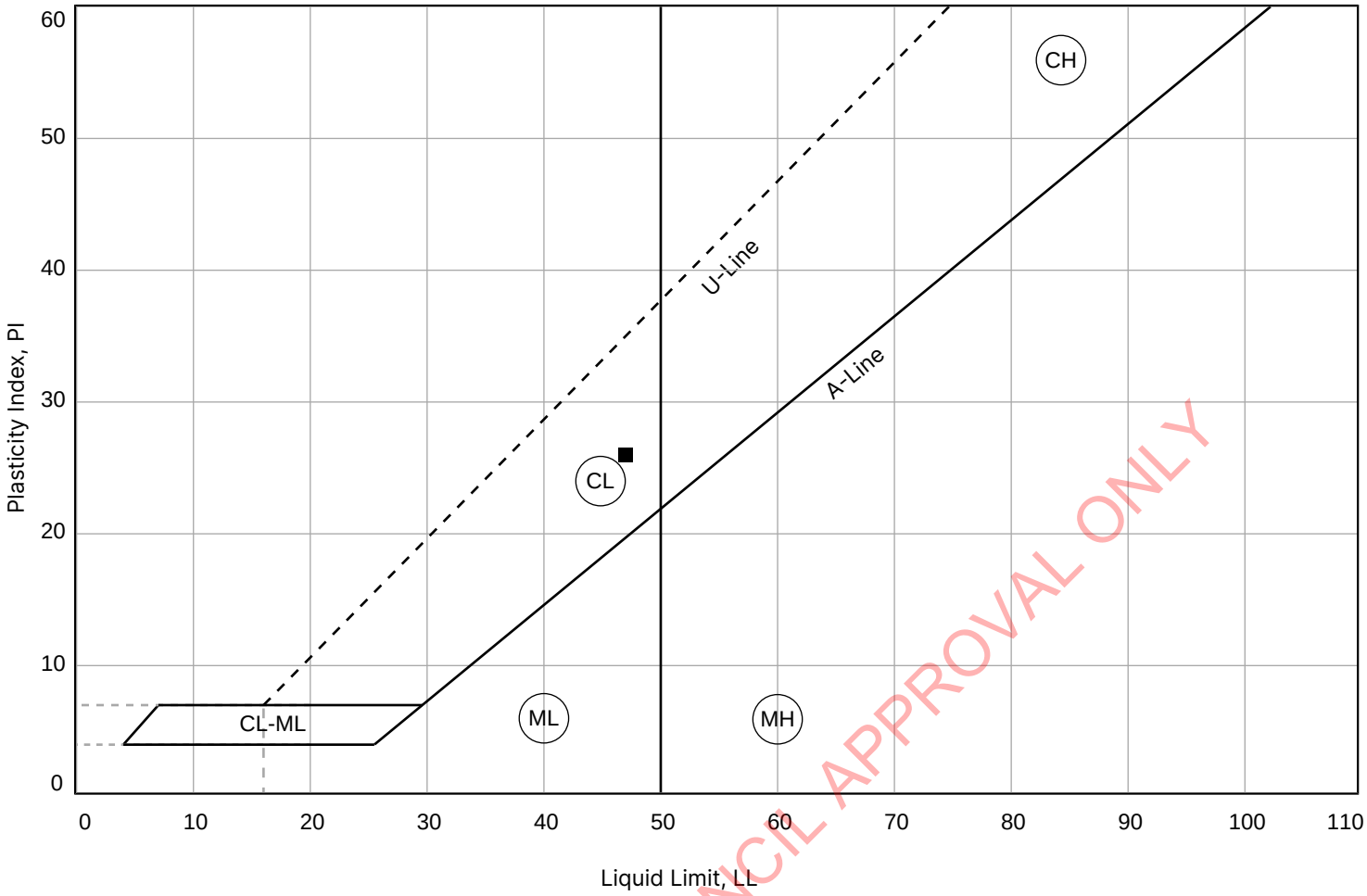

FOR COUNCIL APPROVAL ONLY

ICON	EXPLORATION NUMBER	SAMPLE NUMBER	DEPTH (Feet)	USCS GROUP NAME	USCS SYMBOL	LL	PL	PI	FINES (%)
■	TP2	TP2-4.5	4.5	LEAN CLAY with Sand	CL	47	21	26	77.91

CO-61 Park
Roseville, CA

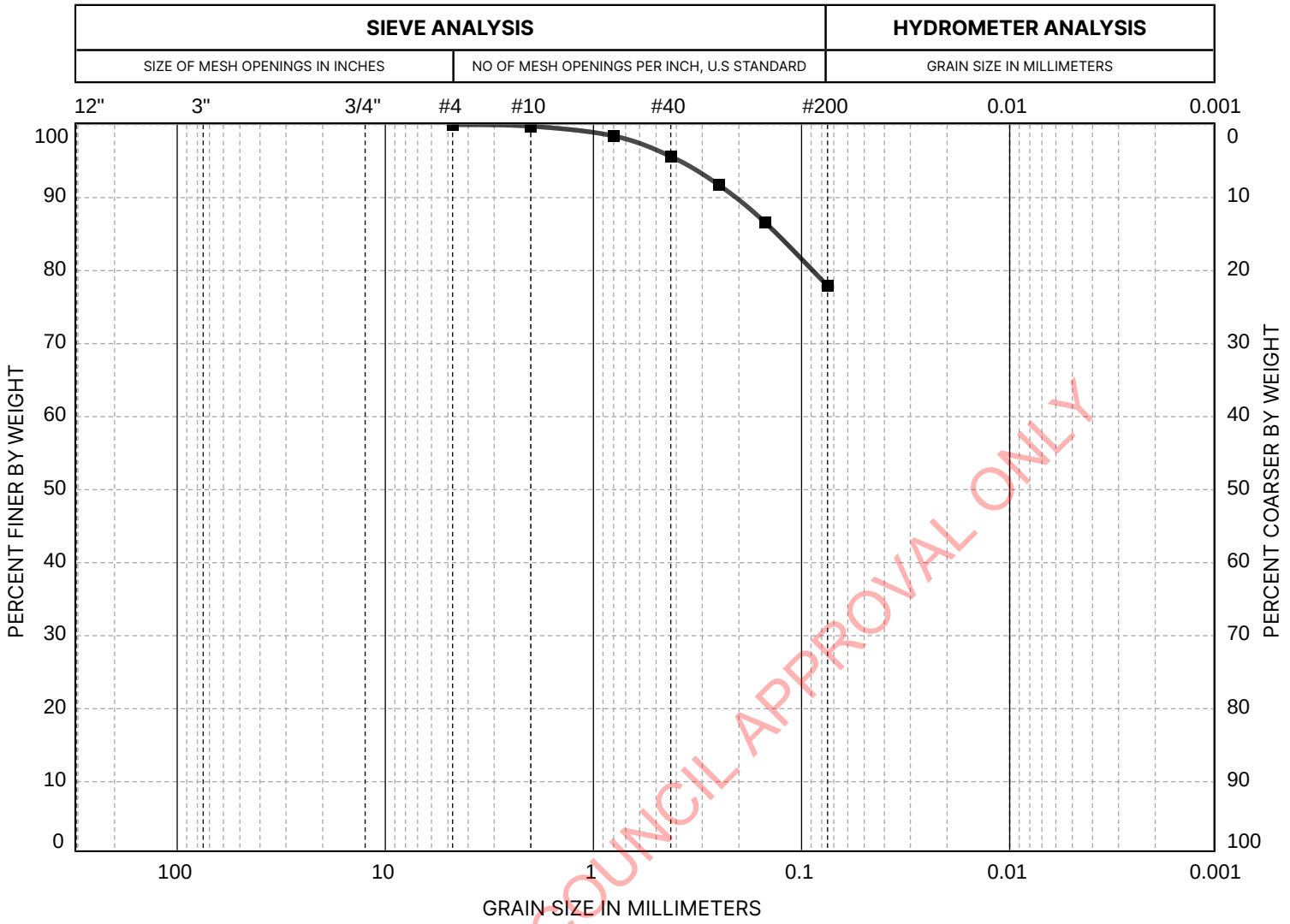

FOR COUNCIL APPROVAL ONLY

EXPLORATION NUMBER	SAMPLE NUMBER	DEPTH	USCS GROUP NAME	GRAVEL (%)	SAND (%)	FINES (%)	D10	D50	D90	CU	CC
TP2	TP2-4.5	4.5	LEAN CLAY with Sand	0.00	22.09	77.91			0.21		

COMPACTION TEST REPORT

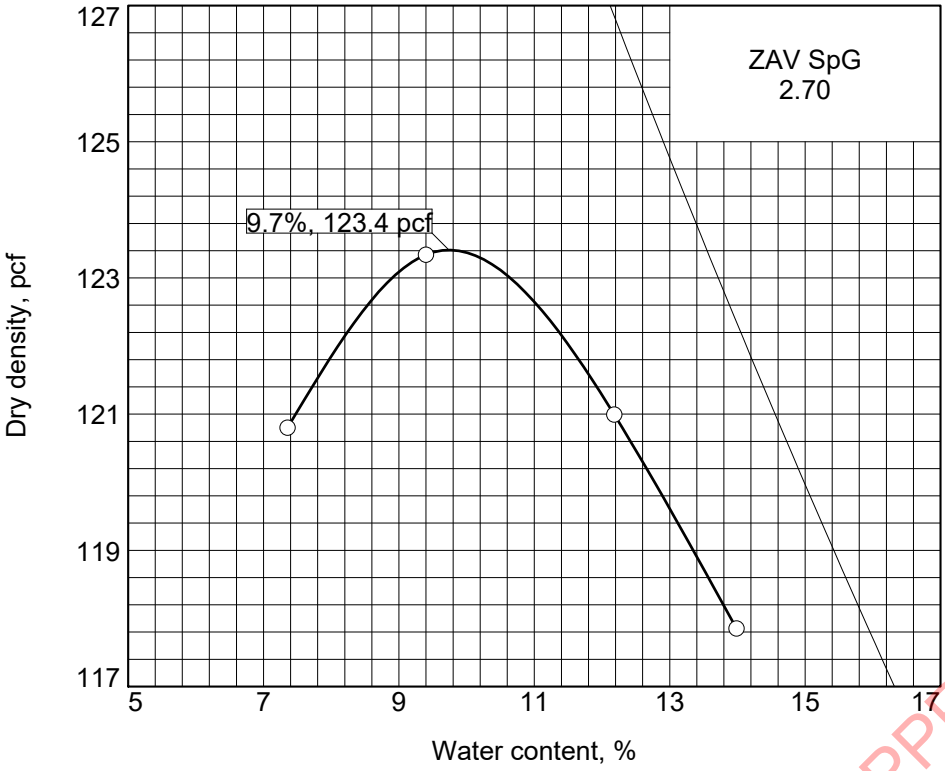

Curve No.
TP4-Bulk

Test Specification:
ASTM 1557 Method A 2024 Mold PM8

Preparation Method
Hammer Wt. 10
Hammer Drop 18
Number of Layers 5
Blows per Layer 25
Mold Size 0.0332 cu. ft.
Test Performed on Material Passing #4 **Sieve**

NM **LL** **PI**
Sp.G. (ASTM D 854) 2.7
%>#4 **%<No.200**
USCS **AASHTO**
Date Sampled
Date Tested LM
Tested By MR

FOR COUNCIL APPROVAL ONLY

TESTING DATA

	1	2	3	4	5	6
WM + WS	4062.0	4041.0	4050.0	3971.0		
WM	2018.0	2018.0	2018.0	2018.0		
WW + T #1	2552.0	2513.0	2543.0	2436.0		
WD + T #1	2330.5	2265.4	2366.8	2302.8		
TARE #1	512.0	495.0	492.0	492.0		
WW + T #2						
WD + T #2						
TARE #2						
MOISTURE	12.2	14.0	9.4	7.4		
DRY DENSITY	121.0	117.9	123.3	120.8		

TEST RESULTS

Maximum dry density = 123.4 pcf

Optimum moisture = 9.7 %

Material Description

Light Brown Lean CLAY

Remarks:

Project No. S3134-05-01 **Client:**
Project: CO-61 Park

○ **Sample Number:** Curve 1

Checked by: MR
Title: LM

Figure

GEOCON CONSULTANTS, INC.

APPENDIX C

FOR COUNCIL APPROVAL ONLY

APPENDIX C

LANDSCAPE SOIL SUITABILITY TEST RESULTS
SUNLAND ANALYTICAL LABORATORY

FOR COUNCIL APPROVAL ONLY

Sunland Analytical
11419 Sunrise Gold Circle, #10
Rancho Cordova, CA 95742
(916) 852-8557

Date Reported 10/22/2025
Date Submitted 10/16/2025

To: Mark Repking
Geocon
3160 Gold Valley Dr. #800
Rancho Cordova, CA 95742

From: Gene Oliphant, Ph.D. \ Ty Bui
General Manager \ Lab Manager

The reported analysis was requested for the following:
Location : S3134-05-01 Site ID : TP3-BULK.
Thank you for your business.

* For future reference to this analysis please use SUN # 96807-197902.

FOR COUNCIL APPROVAL ONLY

SOIL ANALYSIS

Saturation Percent (SP)	30		
pH	6.40		
E.C.	0.19	mmho/cm	
Tot.Dissolved Salts	121.6	ppm	
Infiltration Rate (0% Slope)	0.75	in/hr	
% Organic Matter	3.0		
C.E.C.	10.5	meq/100g	
Sodium Absorption Ratio (SAR)	5.3		
Exchangable Sodium Percent (ESP)	6.2		
Gypsum Req. (CaSO4*2H2O)	20.	#/1000 sq.ft.	
est. Nitrogen Release	1.3	#/1000 sq.ft.	

Soil Texture Sandy Loam

Nitrate	9.38	ppm	*****
Phosphorus	3.17	ppm	***
Potassium	58.87	ppm	*********
Sulfur	2.62	ppm	****
Chloride	16.87	ppm	**********
Carbonates	13.18	ppm	**********
Sodium	147.88	ppm	
Calcium	1396.80	ppm	******************
Magnesium	326.03	ppm	**********
Boron	0.15	ppm	****
Copper	0.56	ppm	*****
Iron	27.38	ppm	**********
Manganese	10.93	ppm	**********
Zinc	0.22	ppm	*******

Very Low	Low	Adequate	Excessive

Sunland Analytical
11419 Sunrise Gold Circle, #10
Rancho Cordova, CA 95742
(916) 852-8557

DATE 10/22/2025
SUN NUMBER 197902

Information requested by:
Mark Repking
Geocon

Information for:
S3134-05-01
Sample ID: TP3-BULK

SOIL RECOMMENDATIONS FOR LANDSCAPE GARDENING

SOIL pH (Acidity and Alkalinity)

The pH of this sample indicates the soil is moderately acid and should be modified for non acid-tolerant plants. Apply 10 pounds of Lime per 1000 sq.ft. and work into ground before planting.

DISSOLVED SALTS (Indicated by E.C. & TDS)

These conditions are in the normal range for plant growth.

SOIL TEXTURE AND RATE OF WATER INFILTRATION

The infiltration rate for all soil textures decreases with increasing ground slope. At 0 to 4%, 5 to 8%, 9 to 12%, 13 to 16% and above 16% the infiltration rate of this sample decreases from 0.75 to 0.60, 0.45, 0.30, 0.19, respectively. Infiltration rate also decreases with percent of ground cover and by compaction.

WATER PENETRATION OF SOIL DUE TO CHEMICAL CHARACTERISTICS

When exchangable Sodium increases in the soil, water penetration decreases. Based on SAR and ESP values this sample will have increasing problems with water penetration. Apply 20 pounds of Gypsum per 1000 sq.ft., work into soil, and leach with good quality water. Have the water analyzed before use to insure that the water is not the cause of the high Sodium in the soil. Leaching requires good quality water and adequate drainage through the root zone.

ORGANIC MATTER

Organic matter provides a slow nitrogen release and aids water retention. This sample has a moderate Organic Matter content.
To maintain moisture and provide sustained nitrogen release a level of 10% organic matter is recommended. This can be accomplished by adding 4 yards per 1000 sq.ft. of ground fir bark that is approximately 75% organic matter (i.e. typically found in ground fir bark which also has naturally low salt and boron concentrations). In California, the MWELO ordenance requires a fixed application of four yards of COMPOST if the soil organic matter is less than 6%. However, of significant concern when applying COMPOST is the potential for the compost to have high salt, high boron content, high C to N ratio and having a higly variable pH (very high to very low). All of these COMPOST characteristics can have very negative affect on plant growth. Take care by having the compost analyzed or by seeing a recent analysis of the compost to be used.

FOR COUNCIL APPROVAL ONLY

Sunland Analytical
11419 Sunrise Gold Circle, #10
Rancho Cordova, CA 95742
(916) 852-8557

DATE 10/22/2025
SUN NUMBER 197902

Information requested by:
Mark Repking
Geocon

Information for:
S3134-05-01
Sample ID: TP3-BULK

SOIL RECOMMENDATIONS FOR LANDSCAPE GARDENING

SOIL BORON

Boron concenrations are in a range allowing normal plant growth.

SOIL MICRONUTRIENTS

Micronutrients, Copper, Iron, Manganese and Zinc, in soil are present in small amounts. However, they play a necessary role in plant metabolism. Without appropriate amounts plants will not thrive. Apply the following per 1000/ sq.ft. Do not mix micronutrients during application (use a separate application for each element indicated).

Because copper, manganese and zinc are in very small amounts, dissolve (each) in 2 gallons of water and use a sprayer to obtain an even application.
Apply 0.2 # Copper Sulfate, 0.5 # Zinc Sulfate and water.

SOIL MACRONUTRIENTS : NITROGEN-PHOSPHORUS-POTASSIUM (N-P-K)

GENERAL N-P-K RECOMMENDATION

Use ONE of these NPK preparations for the first fertilizer application.

Standard NPK Fertilizer Preparations	6-24-24	5-20-10	16-16-16	0-10-10	28-3-4	21-0-0	Customer Choice None
#/1000 sq.ft.	14	18	N/A	N/A	N/A	N/A	**

GRASS OR SOD PREPARATION

Till in organic matter, N,P,K and micro nutrients in addition to any lime gypsum or sulfur as directed above. Smooth soil surface and follow seed or sod producers direction for moisture and product application.

TREES AND SHRUBS

Excavate holes for planting shrubs and trees to at least twice the volume of the container. Prepare backfill for tree and shrub planting holes by mixing three parts of native soil (or imported top soil) with one part organic amendment (preferably nitrogen and iron fortified) and 2.5 pounds of 6-24-24 per yard of mix. For extended fertilization, place slow release fertilizer tablets in each hole per manufacturer's instructions. If 6-24-24 was not directly added to backfill mix, during backfill apply uniformly 1/2 oz of 6-24-24 per gallon containers, 2.5 oz per 5 gallons, 6 oz per 24 inch boxes.

FOR COUNCIL APPROVAL ONLY

Sunland Analytical
11419 Sunrise Gold Circle, #10
Rancho Cordova, CA 95742
(916) 852-8557

DATE 10/22/2025
SUN NUMBER 197902

Information requested by:
Mark Repking
Geocon

Information for:
S3134-05-01
Sample ID: TP3-BULK

SOIL RECOMMENDATIONS FOR LANDSCAPE GARDENING

Summary and Suggested Sequence of Soil Improvements (#/1000 Sq.Ft.)

Gypsum	20	# - leach soil
Lime	10	#
Organic Amendment	4	Yd./1000 Sq.Ft. Bulk organic amendment (nitrified). or in Calif. if Org.Mat. less than 6% use 4 yd compost.
N-P-K Fertilizer	See above chart	
Micro Nutrients		
Copper	0.2 #	Copper sulfate
Zinc	0.5 #	Zinc Sulfate
Sulfate-Sulfur	Low sulfate compensated by other soil improvements.	

Maintenance Fertilization

Apply 5 pounds of Ammonium sulfate (21-0-0) per 1000 sq.ft.every month until plants become established. After established, apply 28-3-4 (or similar preparation) to provide desired growth rate and color.

FOR COUNCIL APPROVAL ONLY

SUNLAND ANALYTICAL LAB
11419 Sunrise Gold Cr., Ste.10
Rancho Cordova, CA 95742
(916)852-8557

INVOICE

Geocon
3160 Gold Valley Dr. #800
Rancho Cordova, CA 95742

ATTENTION ACCOUNTS PAYABLE

Inv.No. 116807

Date 10/23/2025
Terms: NET 30, 30+ 15%
Customer P.O.#
Requestor: Repking
* Please indicate Invo.# on remittance

SUN NOS.	SAMPLE LOCATION		ANALYSIS	PRICE
197902	S3134-05-01	TP3-BULK	LTP.4	114.00
	********* Total *********			114.00

FOR COUNCIL APPROVAL ONLY

ROSEVILLE, CA 95747

C O - 6 1 P A R K

02/09/2026

APN: 481-270-079-000

CWJ#: 500353
EN#: EN25-0621
BD#:
WDID#:

CALA
12150 Tributary Point Drive, Suite 140
Gold River, CA 95670
T 916.985.4366
www.callanderassociates.com

REVISION	DATE



VICINITY MAP

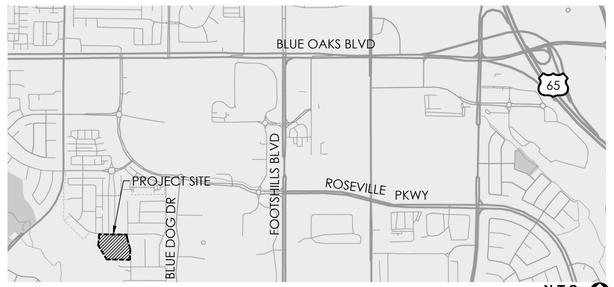

LOCATION MAP

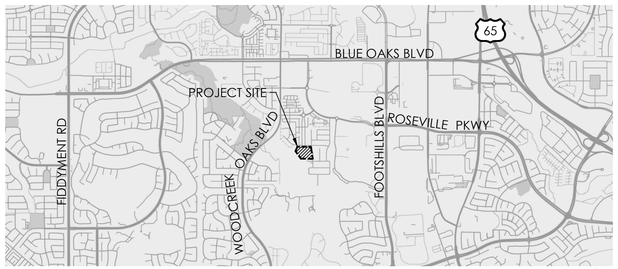

BUILDING DEPT. REVIEW

TO BE COMPLETED WITH NEXT SUBMITTTAL

ALL IMPROVEMENTS WHICH FALL UNDER THE PURVIEW OF THE CBC ARE SHOWN HEREON FOR REFERENCE ONLY AND SHALL REQUIRE A SEPARATE BUILDING PERMIT. PLEASE CONTACT THE CITY OF ROSEVILLE BUILDING DEPARTMENT FOR FURTHER INFORMATION.

DEFERRED SUBMITTALS

TO BE COMPLETED WITH NEXT SUBMITTTAL

BID ALTERNATES

ADD ALTERNATE #1: 2 BAY SWING WITH BUCKET SEATS AND SEATING AREA
ADD ALTERNATE #2: HALF BASKETBALL COURT WITH POST AND CABLE FENCE AND
ADD ALTERNATE #3: SHADED PICNIC AREA
ADD ALTERNATE #4: ADDITIONAL LAWN AREA
ADD ALTERNATE #5: BIKE TRAIL CONNECTION
ADD ALTERNATE #6: SHADE STRUCTURE AT PLAY AREA

SPECIAL INSPECTIONS

TO BE COMPLETED WITH NEXT SUBMITTTAL

PREPARED BY

LANDSCAPE ARCHITECT
Callander Associates Landscape Architecture, Inc.
12150 Tributary Point Drive, Suite 140
Gold River, CA 95670
Phone: (916) 985-4366

ELECTRICAL ENGINEER
M. Neil's Engineering, Inc.
100 Howe Ave., Ste. 235N
Sacramento, CA 95825-8217
Phone: (916) 923-4400

GEOTECH ENGINEER
Geocon Consultants Inc
3160 Gold Valley Drive, Suite 800
Phone: (916) 852 - 9118

PREPARED FOR

City of Roseville
316 Vernon Street, Ste. 400
Roseville, CA 95678

UTILITY REPRESENTATIVES

UTILITY	COMPANY	CONTACT	PHONE
USA	-	-	1-800-642-2444
ELECTRICITY	ROSEVILLE ELECTRIC	KEITH LITTS	916-580-9405
WATER	CITY OF ROSEVILLE	SEAN BIGLEY	916-774-5750
SEWER	CITY OF ROSEVILLE	ENVIRONMENTAL UTILITIES	916-774-5750
DRAINAGE	DEVELOPMENT SERVICES ENGINEERING	ENGINEERING	916-774-5339

GENERAL NOTES

1. ALL CONSTRUCTION AND MATERIALS SHALL CONFORM TO THESE PLANS AND THE LATEST EDITION AND AMENDMENTS OF THE CITY OF ROSEVILLE DESIGN AND CONSTRUCTION STANDARDS.
2. THE CITY OF ROSEVILLE IS A MEMBER OF THE UNDERGROUND SERVICE ALERT (U.S.A.) ONE-CALL SYSTEM. THE CONTRACTORS SHALL NOTIFY THE U.S.A. CENTER 48 HOURS IN ADVANCE OF PERFORMING ANY EXCAVATION WORK BY CALLING 1-800-227-2600.
3. THE CONTRACTOR SHALL MARK IN WHITE PAINT ALL AREAS TO BE EXCAVATED PRIOR TO CONTACTING U.S.A. ANY AREAS NOT MARKED WILL NOT BE SUBJECT TO U.S.A., AND THE CONTRACTOR SHALL BE RESPONSIBLE FOR ANY DAMAGE RESULTING FROM EXCAVATION.
4. THE CONTRACTOR SHALL EXPOSE AND VERIFY LOCATIONS AND ELEVATIONS OF EXISTING UNDERGROUND UTILITIES PRIOR TO CONSTRUCTION OF THE NEW IMPROVEMENTS CONNECTING TO OR IN THE VICINITY OF THE SAME.
5. THE CONTRACTOR SHALL BE RESPONSIBLE FOR THE PROTECTION OF ALL EXISTING MONUMENTS AND OTHER SURVEY MARKERS ON THE JOB SITE.
6. THE CONTRACTOR SHALL PLACE BOXED SURVEY MONUMENTS WITH 1-1/2" BRONZE HEAD SET IN CONCRETE (STD. DWG. ST-36) AT LOCATIONS SHOWN ON THESE PLANS.
7. A.C. SURFACE SHALL BE CUT TO A NEAT, STRAIGHT LINE PARALLEL WITH THE STREET CENTERLINE AND THE EXPOSED EDGE SHALL BE TACKED WITH EMULSION PRIOR TO PAVING. THE EXPOSED BASE MATERIAL SHALL BE GRADED, RE-COMPACTED, AND RESEALED PRIOR TO PAVING.
8. ANY EXISTING CONCRETE SURFACE TO BE REMOVED SHALL BE SAW CUT TO A NEAT, STRAIGHT LINE.
9. THE CONTRACTOR SHALL SUBMIT A TRAFFIC CONTROL PLAN THAT SHALL BE ACCEPTED BY THE ENGINEERING DIVISION OF PUBLIC WORKS BEFORE START OF WORK IN RIGHT-OF-WAY AND SHALL BE IN ACCORDANCE WITH CALIFORNIA MUTCD LATEST EDITION. AT LEAST ONE LANE IN EACH DIRECTION SHALL REMAIN OPEN TO TRAFFIC UNLESS OTHERWISE SHOWN ON THE PLANS. TRAFFIC CONTROL HOURS ARE SUBJECT TO LIMITATION BY THE CITY. TRAFFIC CONTROL WITH LANE CLOSURES THAT AFFECT TRAFFIC FLOW MAY REQUIRE NIGHT WORK. IF, AS A PART OF TRAFFIC CONTROL MEASURES, A ROADWAY CLOSURE HAS BEEN APPROVED, THE CONTRACTOR SHALL NOTIFY DEVELOPMENT SERVICES CONSTRUCTION INSPECTOR 72 HOURS IN ADVANCE OF SETTING UP THIS CLOSURE.
10. CURB RAMPS CONFORMING TO ALL ADA AND TITLE 24 REQUIREMENTS SHALL BE PLACED AT ALL NEW STANDARD CURB RETURNS (STANDARD DRAWING ST-27) AND STANDARD TYPE A-7 DRIVEWAYS. WHERE EXISTING RAMPS DO NOT MEET CURRENT ADA AND TITLE 24 REQUIREMENTS, THE RAMPS SHALL BE UPGRADED IN CONFORMANCE WITH MINIMUM TITLE 24 REQUIREMENTS. WHERE EXISTING RAMPS DO NOT INCLUDE DETECTABLE WARNING PANELS (TRUNCATED DOMES), PANELS SHALL BE RETROFITTED PER THE CONSTRUCTION STANDARDS.
11. DRAIN INLETS NOT WITHIN A PAVED AREA SHALL HAVE A 12" WIDE COLLAR OF 6" THICK P.C.C. OR 2" THICK A.C.
12. PRIOR TO THE CERTIFICATE OF COMPLETION ON ALL SINGLE-FAMILY RESIDENTIAL SUBDIVISIONS, THE DEVELOPER SHALL SUBMIT A LETTER FROM THE POST OFFICE STATING THAT ITS REQUIREMENTS FOR MAILBOX CLUSTER PADS HAVE BEEN SATISFIED.
13. ALL UNDERGROUND UTILITIES WITHIN EXISTING OR PROPOSED CITY OF ROSEVILLE EASEMENTS SHALL REQUIRE A MINIMUM OF 90% COMPACTION ON THE TRENCH BACKFILL. COMPACTION OF BACKFILL BY JETTING IS NOT PERMITTED IN CITY OF ROSEVILLE RIGHT OF WAY AND EASEMENT AREAS OR WITHIN DEDICATED RECLAIMED WATER, STORM, SEWER OR WATER EASEMENTS AND MAINS.
14. THE CONTRACTOR SHALL CONDUCT A PRE-CONSTRUCTION MEETING ONE-WEEK PRIOR TO STARTING WORK. MEMBERS OF THE CITY OF ROSEVILLE DEVELOPMENT SERVICES DEPARTMENT, ENVIRONMENTAL UTILITIES DEPARTMENT AND ALL OTHER UTILITY REPRESENTATIVES SHALL BE NOTIFIED BY THE CONTRACTOR AS TO THE DATE AND LOCATION OF THE MEETING.
15. PRIOR TO EXCAVATION OF TRENCHES 5 FEET OR DEEPER, THE CONTRACTOR SHALL SUBMIT TO THE DEVELOPMENT SERVICES DEPARTMENT OR ENVIRONMENTAL UTILITIES DEPARTMENT INSPECTOR A COPY OF THE COMPANY'S ANNUAL CALOSHA TRENCHING PERMIT AND A COPY OF THE COMPANY'S LETTER INFORMING CALOSHA OF THE TIME THE TRENCHING IS COMMENCING AND THE LOCATION OF THE WORK.
16. ALL PAINTED TRAFFIC STRIPES, ARROWS, AND PAVEMENT MARKINGS SHALL BE CONSTRUCTED WITH THERMOPLASTIC MATERIAL TO THE SPECIFICATIONS SET FORTH IN CHAPTER 3 OF THE CALIFORNIA MUTCD LATEST EDITION. NON-REFLECTIVE PAVEMENT MARKERS SHALL CONSIST OF CERAMIC MARKERS ONLY CONFORMING TO CHAPTER 3 OF THE CALIFORNIA MUTCD LATEST EDITION.
17. THE CONTRACTOR SHALL TAKE EXTREME CARE TO PROTECT EXISTING SITE AND ADJACENT IMPROVEMENTS FROM DAMAGE. THE CONTRACTOR SHALL BE RESPONSIBLE TO REPAIR OR MAKE REPLACEMENT OF ALL CRACKED AND OTHERWISE PRE-EXISTING DAMAGED PUBLIC IMPROVEMENTS ALONG THE FRONTAGE OF THE PROJECT SITE AND ANY DAMAGE RESULTING FROM CONSTRUCTION TO CURRENT CITY STANDARDS AND AT THEIR OWN EXPENSE. THE EXTENT OF THE REPAIRS SHALL BE DETERMINED BY THE DEVELOPMENT SERVICES CONSTRUCTION INSPECTOR AND SHALL BE COMPLETED PRIOR TO THE CITY ACCEPTANCE OF THE IMPROVEMENTS.
18. WHERE COMBINATIONS OF SIDEWALK OR CURB AND GUTTER ARE PLACED CONTIGUOUS TO EXISTING, ALL ADJOINING EXISTING CONCRETE VERTICAL FACES SHALL BE DOWELED. ALL ABUTTING SIDEWALK ENDS SHALL BE DOWELED MID-SECTION VERTICALLY WITH TWO DOWELS FOR FOUR THROUGH SIX-FOOT WIDE SIDEWALK AND THREE DOWELS FOR WIDER SIDEWALK. ABUTTING CURB AND GUTTER ENDS SHALL BE DOWELED TWICE, 18 INCHES APART AT GUTTER PAN MID-SECTION. DOWEL CONNECTIONS OF LONGITUDINAL RUNS OF SIDEWALK TO BACK OF CURB SHALL BE THREE FEET ON CENTER. ALL DOWELS SHALL BE 16 INCHES LONG, GRADE 60; #4 REBAR PENETRATING FOUR INCHES. THE DOWEL HOLE SHALL BE 5/8-INCH DIAMETER AT A SLIGHT HORIZONTAL ANGLE FROM PERPENDICULAR. THE PENETRATING PORTION OF THE DOWEL AND THE ENTIRE (CLEANED) VERTICAL SURFACE OF THE ADJOINING, EXISTING CONCRETE SHALL BE THOROUGHLY COATED WITH STATE STANDARD TWO-PART EPOXY.
19. WHEN SAWCUTTING WITHIN THE STREET FOR TRENCHING OR OTHER PURPOSES, CONTRACTOR SHALL GRIND 1½" OF PAVEMENT BETWEEN THE LANE LINES (FROM LANE STRIPE TO LANE STRIPE) UPON COMPLETION OF THE SAWCUTTING AND OR TRENCHING WORK. WHERE THE SAWCUTTING OCCURS BETWEEN THE CURB AND GUTTER AND NEAREST LANE STRIPE (INCLUDING BIKE LANES), THE SAME 1 ½" GRIND SHALL BE REQUIRED. CONTRACTOR TO PLACE A PETROMAT FABRIC OR APPROVED EQUAL BY THE CITY OF ROSEVILLE AND OVERLAY FROM LANE STRIPE TO LANE STRIPE, OR CURB TO LANE STRIPE AND RESTRIPE OR REPLACE ANY DELINEATORS REMOVED DURING THE GRIND.
20. ALL PUBLICLY MAINTAINED STORM DRAIN ON PRIVATE PROPERTY SHALL BE A MINIMUM OF 12 INCHES IN DIAMETER AND SHALL BE RCP CL IV, UNLESS OTHERWISE APPROVED BY THE CITY ENGINEER.
21. FOR RESIDENTIAL SUBDIVISIONS, UNLESS OTHERWISE APPROVED BY DEVELOPMENT SERVICES ENGINEERING, THE FINAL GRADING OF THE PROJECT SITE SHALL BE CONSTRUCTED TO ACCOMMODATE A MAXIMUM DRIVEWAY SLOPE OF 14% FOR EACH RESIDENTIAL LOT, AS MEASURED FROM THE BACK OF THE SIDEWALK TO THE GARAGE (20-FT SET BACK). IT WILL REMAIN THE RESPONSIBILITY OF THE BUILDERS/DEVELOPER TO DESIGN A HOUSE THAT PROVIDES SUITABLE ACCESS TO THE PARCEL.
22. THE CONTRACTOR SHALL PLACE FILTER FABRIC BETWEEN THE INITIAL BEDDING AND BACKFILL AND THE TRENCH BACKFILL FOR SANITARY SEWERS DEPTH GREATER THAN 15 FEET MEASURED TO THE PIPE INVERT.
23. COMPOSITE BASE SHEET: THE PROPOSED IMPROVEMENTS SHOWN ON THESE DRAWINGS ARE SUPERIMPOSED ON A BASE SHEET. THIS BASE SHEET IS COMPILED FROM THE TOPOGRAPHIC SURVEY, OTHER ARCHITECTURAL AND/OR ENGINEERING DOCUMENTS, AND OTHER DATA AS MADE AVAILABLE TO THE LANDSCAPE ARCHITECT. THIS BASE SHEET INFORMATION IS SHOWN IN HALF TONE ON THE PLANS. THE LANDSCAPE ARCHITECT SHALL NOT BE HELD LIABLE FOR CHANGES, INACCURACIES, OMISSIONS, OR OTHER ERRORS ON THESE DOCUMENTS. THE COMPOSITE BASE SHEET IS PROVIDED AS AN AID ONLY AND THE CONTRACTOR SHALL BE RESPONSIBLE FOR REVIEWING THESE DOCUMENTS AND INCORPORATING/INTEGRATING ALL CONSTRUCTION AS REQUIRED TO ACCOMMODATE SAME.
    THE BASE SHEET SOURCE FOR THESE DRAWINGS IS: CO-61 PARK AS-BUILT EXHIBIT (CO61RG)
24. IN ACCORDANCE WITH THE CITY'S NOISE ORDINANCE, THE HOURS OF PROJECT CONSTRUCTION SHALL BE LIMITED TO THE FOLLOWING: 7:00 A.M. TO 7:00 P.M. (MONDAY THROUGH FRIDAY) 8:00 A.M. TO 8:00 P.M. (SATURDAY, SUNDAY, AND HOLIDAYS).
25. PRIOR TO COMMENCEMENT OF GRADING ACTIVITIES, THE CONTRACTOR SHALL HAVE THE EXISTING DRY UTILITIES POT HOLED FOR VERIFICATION OF LOCATION AND DEPTH. AT SUCH TIME, POT HOLE DATA SHALL BE PROVIDED TO THE ENGINEER FOR DETERMINATION OF ADEQUATE CLEARANCE AND SEPARATION.
26. PRIOR TO THE COMMENCEMENT OF GRADING OPERATIONS, THE CONTRACTOR SHALL IDENTIFY THE SITE WHERE THE EXCESS/BORROW EARTHEN MATERIAL SHALL BE IMPORTED/DEPOSITED. IF THE BORROW/DEPOSIT SITE IS WITHIN THE CITY OF ROSEVILLE, THE CONTRACTOR SHALL PRODUCE A REPORT ISSUED BY A GEOTECHNICAL ENGINEER TO VERIFY THAT THE EXPORTED MATERIALS ARE SUITABLE FOR THE INTENDED FILL, AND SHALL SHOW PROOF OF ALL APPROVED GRADING PLANS. HAUL ROUTES TO BE USED SHALL BE SPECIFIED.
27. CITY OF ROSEVILLE BENCHMARK: BENCHMARK 96, NAVD 29, 3¼" BRASS DISK STAMPED 2018 PLS 8278, TOP OF CURB 1 FOOT SOUTH OF D.I. AT THE SOUTHWEST CORNER OF THE INTERSECTION OF BLUE OAKS BLVD. AND WOODCREEK OAKS BLVD. (2012 B.M.96 DATUM NGVD88 ELEV= 1114.97, PLS5978)

MODEL CODES

ALL WORK SHALL CONFORM TO THE FOLLOWING CODES:
2025 CALIFORNIA BUILDING CODE WITH CITY OF ROSEVILLE AMENDMENTS (CBC)
2025 CALIFORNIA GREEN BUILDING STANDARDS CODE (CGBSC)
2025 CALIFORNIA ELECTRICAL CODE WITH CITY AMENDMENTS (CEC)
2025 CALIFORNIA ENERGY CODE (CEC PART 6)
2025 CALIFORNIA FIRE CODE WITH CITY OF ROSEVILLE AMENDMENTS (RFC)
2025 CALIFORNIA PLUMBING CODE (CPC)
2025 CALIFORNIA MECHANICAL CODE (CMC)
CURRENT VERSION CITY OF ROSEVILLE PARKS DESIGN AND CONSTRUCTION STANDARDS

SHEET SCHEDULE

SHEET	DESCRIPTION
1.0	COVER SHEET WITH CALCULATIONS
1.1	CITY OF ROSEVILLE STANDARD NOTES
1.2	BASE BID SCOPE OF WORK PLAN & SITE ACCESSIBILITY PLAN
1.3	ALL ALTERNATES SCOPE OF WORK PLAN & SITE ACCESSIBILITY PLAN
2.0	DEMOLITION PLAN
3.0	GRADING & DRAINAGE PLAN
4.0 - 4.1	EROSION CONTROL PLAN
5.0 - 5.1	LAYOUT PLAN
6.0	IRRIGATION PLAN - BASE BID
6.1	IRRIGATION PLAN - ADD ALTERNATES
6.2	IRRIGATION NOTES
7.0	PLANTING PLAN - BASE BID
7.1	PLANTING PLAN- ADD ALTERNATES
8.0 - 8.6	LANDSCAPE DETAILS
E0.1	ELECTRICAL SHEET INDEX, SYMBOL LIST, ABBREVIATIONS, AND GENERAL NOTES
E1.1	SITE PLAN - REMODEL - ELECTRICAL
E3.1	ONE-LINE POWER DIAGRAM AND PANEL SCHEDULE
E.4.1	ELECTRICAL DETAILS
E5.1	TITLE 24 - OUTDOOR LIGHTING COMPLIANCE FORMS
E5.2	TITLE 24 - ELECTRICAL POWER DISTRIBUTION COMPLIANCE FORMS

CUT & FILL CALCULATIONS

DISTURBED ACRES: 5.05 AC

EARTHWORK CALCULATIONS
VOLUME CUT: 1645 CY
VOLUME FILL: 1617 CY
NET CUT: 28 CY

CITY OF ROSEVILLE

DEPT. OF DEVELOPMENT SERVICES	
ACCEPTED BY:	DATE
CITY ENGINEER	

CERTIFICATE OF COMPLIANCE	
ACCEPTED BY:	DATE
SURVEYOR	

811 Know what's below. Call before you dig.

FOR CITY APPROVAL ONLY
FOR CONSTRUCTION

CO-61 PARK
5125 ASHBROOK ST,
ROSEVILLE, CA 95747

SUBMITTAL	DATE
30% Submittal	09/30/25
99% Submittal	11/18/25
100% Submittal	02/09/26

PROJECT NO: 25034
DRAWN BY: CM/DS
CHECKED BY: BW
SCALE: As Shown

SHEET TITLE
COVER SHEET WITH CALCULATIONS

SHEET
1.0
1 OF 28

File Path: T:\Projects\2025\25034.CO61Park\3_Construction\Documents\25034_CV.dwg Plot Date: 2/9/26 Saved By: Cma
Copyright © 2026 Callander Associates Landscape Architecture, Inc.

CITY OF ROSEVILLE TREE PRESERVATION NOTES

TREE PRESERVATION:

1. GRADING AROUND TREES TO BE LIMITED TO OUTSIDE THE DRIPLINE. ANY TREE WELL GRADED SHOULD BE DRAINED TO SOME OUTFALL OR SWALE.
2. THE FOLLOWING CONDITIONS SHALL APPLY TO ENSURE THE PRESERVATION OF TREES:
   A. EACH TREE OR GROUP OF TREES TO BE SAVED SHALL BE FENCED BY A CHAIN-LINK FENCE PRIOR TO ANY GRADING OR MOVEMENT OF HEAVY EQUIPMENT OR ISSUANCE OF ANY PERMITS.
   B. FENCING SHALL BE LOCATED ONE FOOT (1') OUTSIDE THE DRIPLINE OF THE TREE OR TREES.
   C. SIGNS SHALL BE POSTED ON ALL SIDES OF SAID FENCES STATING:

   WARNING:
   THIS FENCE SHALL NOT BE REMOVED
   OR RELOCATED WITHOUT WRITTEN
   AUTHORIZATION FROM THE
   PLANING DEPARTMENT

3. THE GRADING PLAN FOR THE PROJECT HAS BEEN DESIGNED FOR NO GRADING TO OCCUR WITHIN THE DRIPLINE OF ANY OAK TREE UNLESS SPECIFICALLY APPROVED BY PLANNING DEPARTMENT AND SHOWN ON THESE PLANS. NO GRADES SHALL BE MODIFIED WITHOUT THE APPROVAL OF THE CIVIL ENGINEER AND THE CITY OF ROSEVILLE.
4. NO TRENCHING SHALL OCCUR BENEATH THE DRIPLINE OF ANY OAK TREE TO BE SAVED UNLESS STATED ON THESE PLANS "TRENCHING UNDER THIS TREE IS APPROVED".
5. PARKING OF VEHICLES AND EQUIPMENT OR STORAGE OF MATERIALS UNDER THE DRIPLINE OF TREES SHALL NOT OCCUR AT ANY TIME.

REV. 2/23/05

CITY OF ROSEVILLE GRADING & DRAINAGE NOTES

1. GRADING SHALL CONFORM TO APPENDIX CHAPTER 33 UBC, LATEST EDITION, AND TO THE RECOMMENDATIONS OF THE GEOTECHNICAL ENGINEERING REPORT BY(ENGINEERING DIV. FILE NO. 308-961)
2. ALL EROSION AND SEDIMENT CONTROL MEASURES SHALL BE IMPLEMENTED AS SPECIFIED IN THE STORMWATER POLLUTION PREVENTION PLAN (SWPPP) FOR THIS PROJECT OR AS DETERMINED BY THE CITY INSPECTOR. THE SWPPP IS CONSIDERED A DYNAMIC DOCUMENT AND WILL CHANGE AS CONDITIONS WARRANT. PERMANENT EROSION AND SEDIMENT CONTROL MEASURES WILL BE CONSTRUCTED AS SHOWN ON THE SWPPP PLAN.
3. LOTS SHALL BE GRADED WITH A CONSTANT SLOPE ALONG THE FRONTAGE OF THE RIGHT-OF-WAY, FROM BUILDING SETBACK LINE TO BACK OF SIDEWALK. ALL TEMPORARY AND PERMANENT SLOPES STEEPER THAN 4:1 ALONG THIS FRONTAGE SHALL HAVE EROSION NETTING INSTALLED.
4. ALL REAR LOT CORNER ELEVATIONS SHALL BE EQUAL TO OR GREATER THAN THE HIGHEST ADJACENT PAD GRADE UNLESS SPECIFICALLY SHOWN ON THESE PLANS AND APPROVED BY ENGINEERING DIVISION.
5. NON-POTABLE WATER SHALL BE SPRAYED ON ALL EXPOSED EARTH SURFACES DURING CLEARING GRADING, EARTH MOVING, AND OTHER SITE PREPARATION ACTIVITIES. THE EXPOSED EARTH SHALL BE WATERED THROUGHOUT THE DAY TO MINIMIZE DUST.
6. TARPAULINS OR OTHER EFFECTIVE COVERS SHALL BE USED ON ALL STOCKPILED EARTH MATERIAL AND ON HAUL TRUCKS TO MINIMIZE DUST.
7. THE CITY SHALL HAVE THE AUTHORITY TO STOP ALL GRADING OPERATIONS, IF, IN OPINION OF CITY STAFF, INADEQUATE DUST CONTROL MEASURES ARE BEING PRACTICED OR EXCESSIVE WIND CONDITIONS CONTRIBUTE TO FUGITIVE DUST EMISSIONS.
8. ADJACENT STREET FRONTAGES SHALL BE SWEPT AT LEAST ONCE A DAY TO REMOVE SILT AND OTHER DIRT WHICH IS EVIDENT FROM CONSTRUCTION ACTIVITIES. REFER TO SCHEDULES WITHIN SWPPP.
9. THE CONTRACTOR SHALL BE RESPONSIBLE FOR CLEANING CONSTRUCTION VEHICLES LEAVING THE SITE ON A DAILY BASIS TO PREVENT DUST, SILT AND DIRT FROM BEING RELEASED OR TRACKED OFFSITE. REFER TO SWPPP FOR SPECIFIC REQUIREMENTS.
10. CONSTRUCTION SHALL STOP IF CULTURAL RESOURCES ARE SUSPECTED. IT IS POSSIBLE THAT PREVIOUS ACTIVITIES HAVE OBSCURED SURFACE EVIDENCE OF CULTURAL RESOURCES. IF SIGNS OF AN ARCHEOLOGICAL SITE, SUCH AS ANY UNUSUAL AMOUNTS OF STONE, BONE, OR SHELL, ARE UNCOVERED DURING GRADING OR OTHER CONSTRUCTION ACTIVITIES, WORK SHALL BE HALTED WITHIN 100 FEET OF THE FIND AND THE ROSEVILLE COMMUNITY DEVELOPMENT DEPARTMENT SHALL BE NOTIFIED. A QUALIFIED ARCHEOLOGIST SHALL BE CONSULTED FOR AN ON-SITE EVALUATION. THE ARCHEOLOGIST MAY REQUIRE ADDITIONAL MITIGATION.
11. SHOULD GRADING OPERATIONS UNCOVER HAZARDOUS MATERIALS, OR WHAT APPEARS TO BE HAZARDOUS MATERIALS, THE FIRE DEPARTMENT SHALL BE CONTACTED IMMEDIATELY AT (916) 774-5820. THE AREA, WHICH CONTAINS THE HAZARDOUS MATERIALS, SHALL BE MARKED OFF UNTIL AN INVESTIGATION BY A MEMBER OF THE FIRE DEPARTMENT IS CONDUCTED.
12. GRADES SHOWN OUTSIDE OF THE PUBLIC RIGHT OF WAY WITHIN THE APPROVED GRADING PLAN ARE SUBJECT TO FURTHER REVIEW AND MODIFICATION BY THE BUILDING DIVISION FOR COMPLIANCE WITH THE UNIFORM BUILDING CODE AND STATE OF CALIFORNIA TITLE 24 HANDICAP ACCESSIBILITY REQUIREMENTS.
13. THE CONTRACTOR/DEVELOPER IS EXPECTED TO COMPLY WITH THE FUGITIVE DUST CONTROL REQUIREMENTS FROM THE PLACER COUNTY AIR POLLUTION CONTROL DISTRICT: WWW.PLACER.CA.GOV/APCD
14. CONTAMINATED SOIL - DEVELOPER AGREES TO PROPERLY ADHERE TO ALL THEN CURRENT STATE AND FEDERAL REQUIREMENTS WHEN ANY EVIDENCE OF TOXIC, HAZARDOUS OR CONTAMINATED SOILS ARE ENCOUNTERED DURING ANY AND ALL EXCAVATION OR GRADING OPERATIONS, AND TO INDEMNIFY, DEFEND AND HOLD HARMLESS THE CITY OR ROSEVILLE, ITS OFFICERS, AGENTS AND EMPLOYEES, FROM ANY AND ALL LIABILITY, COSTS, CLAIMS, FEES, FINES, PENALTIES AND CLAIMS OF OR DAMAGE OF ANY TYPE WHATSOEVER. EXTRA COSTS FOR REMEDIATION AND/OR REMOVAL OF SOIL SHALL BE BOURN SOLELY BY THE DEVELOPER. THE PARTIES INTEND THAT THIS PROVISION BE BROADLY CONSTRUED.

REV. 04/28/2009

CITY OF ROSEVILLE EROSION CONTROL NOTES

1. THE STATE'S GENERAL PERMIT FOR STORMWATER DISCHARGES ASSOCIATED WITH CONSTRUCTION ACTIVITY (WQD 99-080-DWQ) REQUIRES THE PREPARATION OF A STORMWATER POLLUTION PREVENTION PLAN (SWPPP) FOR SITES WITH SOIL DISTURBANCES GREATER THAN OR EQUAL TO ONE ACRE, OR FROM SITES SMALLER THAN ONE ACRE IF THE CONSTRUCTION ACTIVITY IS PART OF A LARGER PLAN OF DEVELOPMENT OR SALE THAT DISTURBS ONE ACRE OR MORE. CONSTRUCTION ACTIVITY SHALL NOT COMMENCE, NOR A PRE-CONSTRUCTION MEETING PERMITTED TO BE SCHEDULED, PRIOR TO THE SWPPP BEING ACCEPTED BY THE CITY. FOR MORE INFORMATION SEE; http://www.roseville.ca.us/eu/stormwater_management
2. THE PROJECT STORMWATER POLLUTION PREVENTION PLAN (SWPPP) IS INCORPORATED BY REFERENCE INTO THIS SET OF PLANS. THE SWPPP IS CONSIDERED A DYNAMIC DOCUMENT AND WILL CHANGE AS CONDITIONS WARRANT. PERMANENT EROSION AND SEDIMENT CONTROL MEASURES WILL BE CONSTRUCTED AS SHOWN ON THESE PLANS.
3. A COPY OF THE SWPPP SHALL BE KEPT AT THE PROJECT SITE AT ALL TIMES.
4. ALL EROSION AND SEDIMENT CONTROL MEASURES SHALL BE IMPLEMENTED AS SPECIFIED IN THE SWPPP AND/OR AS DIRECTED BY CITY INSPECTOR.
5. NO GRADING OR TRENCHING, EXCEPT AS REQUIRED FOR EROSION OR SEDIMENT CONTROL, SHALL OCCUR WITHIN 35 FEET FROM THE CENTERLINE OF PERENNIAL AND INTERMITTENT DRAINAGE SWALES BETWEEN OCTOBER 15 AND APRIL 15 EXCEPT AS APPROVED BY THE DEPARTMENT OF FISH AND GAME.
6. ALL EROSION AND SEDIMENT CONTROL MEASURES SHALL BE MAINTAINED IN ACCORDANCE WITH THE SWPPP.
7. THE CONTRACTOR SHALL ESTABLISH A SPECIFIC SITE WITHIN THE DEVELOPMENT FOR MAINTENANCE AND STORAGE OF EQUIPMENT OR ANY OTHER ACTIVITY THAT MAY ADVERSELY CONTRIBUTE TO THE WATER QUALITY OF THE RUNOFF IN ACCORDANCE WITH THE SWPPP.

REV. 6-16-05

FOR COUNCIL APPROVAL ONLY

CALA
12150 Tributary Point Drive, Suite 140
Gold River, CA 95670
T 916.985.4366
www.callanderassociates.com

REVISION	DATE

LANDSCAPE ARCHITECT
Signature
May 31, 2027
Renewal Date
Date
STATE OF CALIFORNIA

CO-61 PARK
5125 ASHBBROOK ST,
ROSEVILLE, CA 95747

SUBMITTAL	DATE
30% Submittal	09/30/25
99% Submittal	11/18/25
100% Submittal	02/09/26

PROJECT NO: 25034
DRAWN BY: CM/DS
CHECKED BY: BW
SCALE: As Shown

SHEET TITLE
CITY OF ROSEVILLE STANDARD NOTES

SHEET
1.1
2 OF 28

File Path: T:\Projects\2025\25034_CO61Park\3_ConstructionDocuments\25034_CV.dwg Plot Date: 2/9/26 Saved By: Cma
Copyright © 2025 Callander Associates Landscape Architecture, Inc.

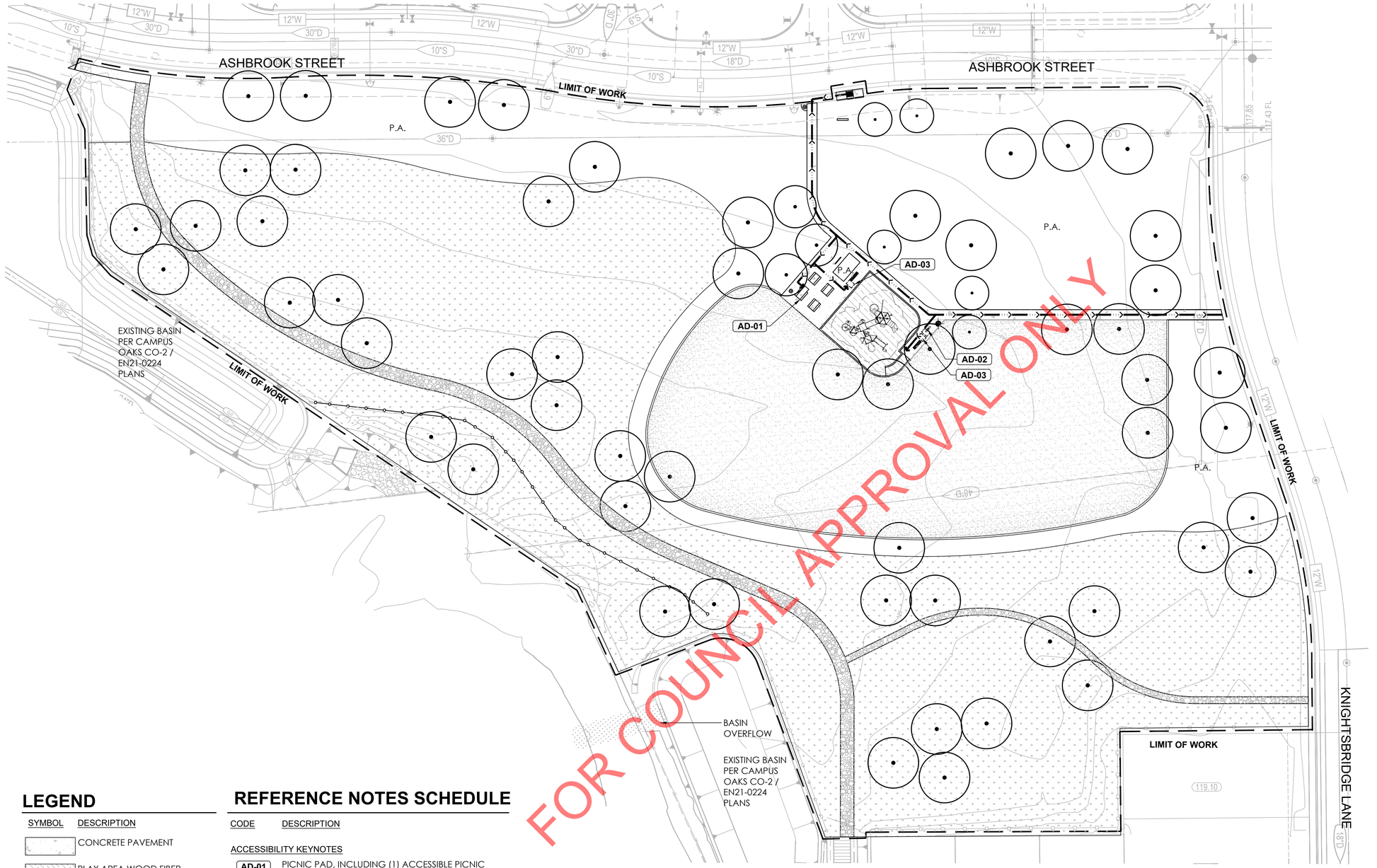

FOR COUNCIL APPROVAL ONLY

LEGEND

SYMBOL	DESCRIPTION
	CONCRETE PAVEMENT
	PLAY AREA WOOD FIBER
	COMPACTED AGGREGATE BASE
	TURF AREA
	NATIVE SEED AREA
P.A.	PLANTING AREA
	PROPOSED TREE, REFER TO PLANTING PLAN 7.0
	ACCESSIBLE PATH OF TRAVEL
	POST AND CABLE FENCE

REFERENCE NOTES SCHEDULE

CODE	DESCRIPTION
ACCESSIBILITY KEYNOTES	
AD-01	PICNIC PAD, INCLUDING (1) ACCESSIBLE PICNIC TABLE
AD-02	(1) ADA ACCESSIBLE DRINKING FOUNTAIN
AD-03	COMPANION SEATING AREA

CALA
12150 Tributary Point Drive, Suite 140
Gold River, CA 95670
T 916.985.4366
www.callanderassociates.com

REVISION	DATE

LICENSED LANDSCAPE ARCHITECT
Signature
May 31, 2027
Renewal Date
Date
STATE OF CALIFORNIA

CO-61 PARK
5125 ASHBBROOK ST,
ROSEVILLE, CA 95747

SUBMITTAL	DATE
30% Submittal	09/30/25
99% Submittal	11/18/25
100% Submittal	02/09/26

PROJECT NO:	25034
DRAWN BY:	CM/DS
CHECKED BY:	BW
SCALE:	As Shown

SHEET TITLE
BASE BID
SCOPE OF WORK
PLAN & SITE
ACCESSIBILITY PLAN

SHEET
1.2
3 OF 28

811 Know what's below. Call before you dig.

File Path: I:\Projects\2025\25034_COA\Park\3_ConstructionDocuments\25034_SCO.dwg Plot Date: 29/26 Saved By: Cma
Copyright © 2021 Callander Associates Landscape Architecture, Inc.

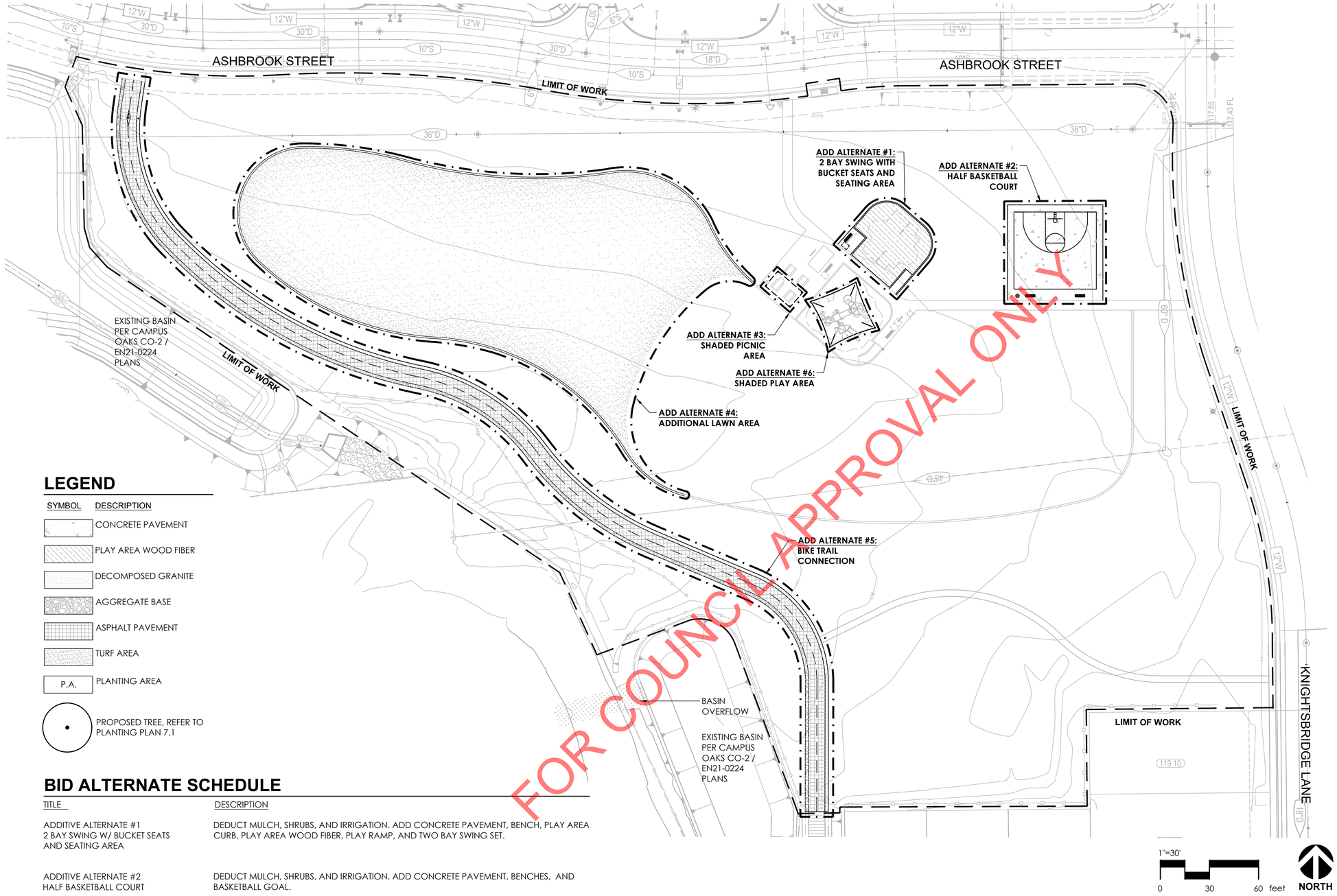

FOR COUNCIL APPROVAL ONLY

LEGEND

SYMBOL	DESCRIPTION
	CONCRETE PAVEMENT
	PLAY AREA WOOD FIBER
	DECOMPOSED GRANITE
	AGGREGATE BASE
	ASPHALT PAVEMENT
	TURF AREA
P.A.	PLANTING AREA
•	PROPOSED TREE, REFER TO PLANTING PLAN 7.1

BID ALTERNATE SCHEDULE

TITLE	DESCRIPTION
ADDITIVE ALTERNATE #1 2 BAY SWING W/ BUCKET SEATS AND SEATING AREA	DEDUCT MULCH, SHRUBS, AND IRRIGATION. ADD CONCRETE PAVEMENT, BENCH, PLAY AREA CURB, PLAY AREA WOOD FIBER, PLAY RAMP, AND TWO BAY SWING SET.
ADDITIVE ALTERNATE #2 HALF BASKETBALL COURT	DEDUCT MULCH, SHRUBS, AND IRRIGATION. ADD CONCRETE PAVEMENT, BENCHES, AND BASKETBALL GOAL.
ADDITIVE ALTERNATE #3 SHADED PICNIC AREA	ADD 12'x20' PICNIC SHADE SHELTER.
ADDITIVE ALTERNATE #4 ADDITIONAL LAWN AREA	DEDUCT MULCH, NATIVE SEED MIX, AND 12" MOWBAND. ADD TURF FROM SEED, TURF IRRIGATION, AND 12" MOWBAND.
ADDITIVE ALTERNATE #5 BIKE TRAIL CONNECTION	DEDUCT NATIVE SEED MIX AND 8'-0" WIDE AGGREGATE BASE PATH. ADD ASPHALT PAVEMENT, 2' AB SHOULDER AND 2' DG SHOULDER.
ADDITIVE ALTERNATE #6 SHADED PLAY AREA	ADD PLAY STRUCTURE SHADE CANOPY.

CALA
12150 Tributary Point Drive, Suite 140
Gold River, CA 95670
T 916.985.4366
www.callanderassociates.com

REVISION	DATE

LICENSED LANDSCAPE ARCHITECT
Signature
May 31, 2027
Renewal Date
Date
STATE OF CALIFORNIA

CO-61 PARK
5125 ASHBBROOK ST,
ROSEVILLE, CA 95747

SUBMITTAL	DATE
30% Submittal	09/30/25
99% Submittal	11/18/25
100% Submittal	02/09/26

PROJECT NO: 25034
DRAWN BY: CM/DS
CHECKED BY: BW
SCALE: As Shown

SHEET TITLE
ALL ALTERNATES:
SCOPE OF WORK
PLAN & SITE
ACCESSIBILITY PLAN

SHEET
1.3
4 OF 28

811 Know what's below. Call before you dig.

File Path: I:\Projects\2025\25034_CO61Park\3_ConstructionDocuments\25034_SCO_A1.dwg Plot Date: 2/9/26 Saved By: Cmo
Copyright © 2025 Callander Associates Landscape Architecture, Inc.

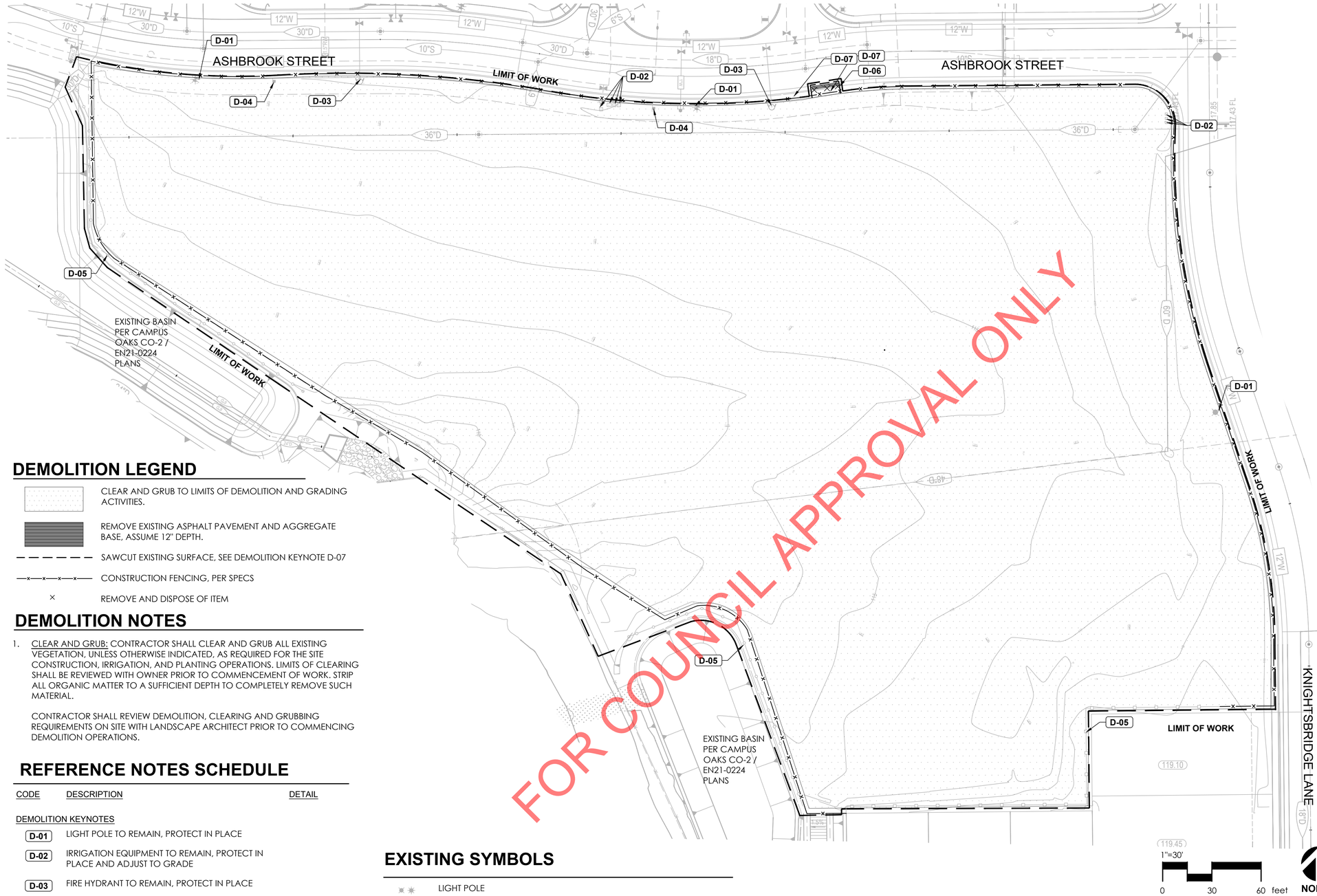

FOR COUNCIL APPROVAL ONLY

DEMOLITION LEGEND

- CLEAR AND GRUB TO LIMITS OF DEMOLITION AND GRADING ACTIVITIES.
- REMOVE EXISTING ASPHALT PAVEMENT AND AGGREGATE BASE, ASSUME 12" DEPTH.
- SAWCUT EXISTING SURFACE, SEE DEMOLITION KEYNOTE D-07
- CONSTRUCTION FENCING, PER SPECS
- × REMOVE AND DISPOSE OF ITEM

DEMOLITION NOTES

1. CLEAR AND GRUB: CONTRACTOR SHALL CLEAR AND GRUB ALL EXISTING VEGETATION, UNLESS OTHERWISE INDICATED, AS REQUIRED FOR THE SITE CONSTRUCTION, IRRIGATION, AND PLANTING OPERATIONS. LIMITS OF CLEARING SHALL BE REVIEWED WITH OWNER PRIOR TO COMMENCEMENT OF WORK. STRIP ALL ORGANIC MATTER TO A SUFFICIENT DEPTH TO COMPLETELY REMOVE SUCH MATERIAL.

   CONTRACTOR SHALL REVIEW DEMOLITION, CLEARING AND GRUBBING REQUIREMENTS ON SITE WITH LANDSCAPE ARCHITECT PRIOR TO COMMENCING DEMOLITION OPERATIONS.

REFERENCE NOTES SCHEDULE

CODE	DESCRIPTION	DETAIL
DEMOLITION KEYNOTES		
D-01	LIGHT POLE TO REMAIN, PROTECT IN PLACE	
D-02	IRRIGATION EQUIPMENT TO REMAIN, PROTECT IN PLACE AND ADJUST TO GRADE	
D-03	FIRE HYDRANT TO REMAIN, PROTECT IN PLACE	
D-04	SIGN TO REMAIN, PROTECT IN PLACE	
D-05	EXISTING FENCE TO REMAIN	
D-06	SAWCUT	
D-07	REMOVE EIXSITNG CURB AND CONCRETE PAVEMENT	

EXISTING SYMBOLS

- LIGHT POLE
- FIRE HYDRANT
- VALVE
- SIGNAGE
- DRAIN INLET
- STORM DRAIN MANHOLE
- SPOT ELEVATION
- CONTOURS (1-FT INTERVALS)
- EXISTING FENCE

CALA
12150 Tributary Point Drive, Suite 140
Gold River, CA 95670
T 916.985.4366
www.callanderassociates.com

REVISION	DATE

LANDSCAPE ARCHITECT — Signature — May 31, 2027 Renewal Date — Date — STATE OF CALIFORNIA

CO-61 PARK
5125 ASHBROOK ST,
ROSEVILLE, CA 95747

SUBMITTAL	DATE
30% Submittal	09/30/25
99% Submittal	11/18/25
100% Submittal	02/09/26

PROJECT NO: 25034
DRAWN BY: CM/DS
CHECKED BY: BW
SCALE: As Shown

SHEET TITLE
DEMOLITION PLAN

SHEET
2.0
5 OF 28

811 Know what's below. Call before you dig.

File Path: T:\Projects\2025\2503A.CO61Park\3_Construction\Documents\2503A_DM.dwg Plot Date: 2/9/26 Saved By: Cma
Copyright © 2025 Callander Associates Landscape Architecture, Inc.

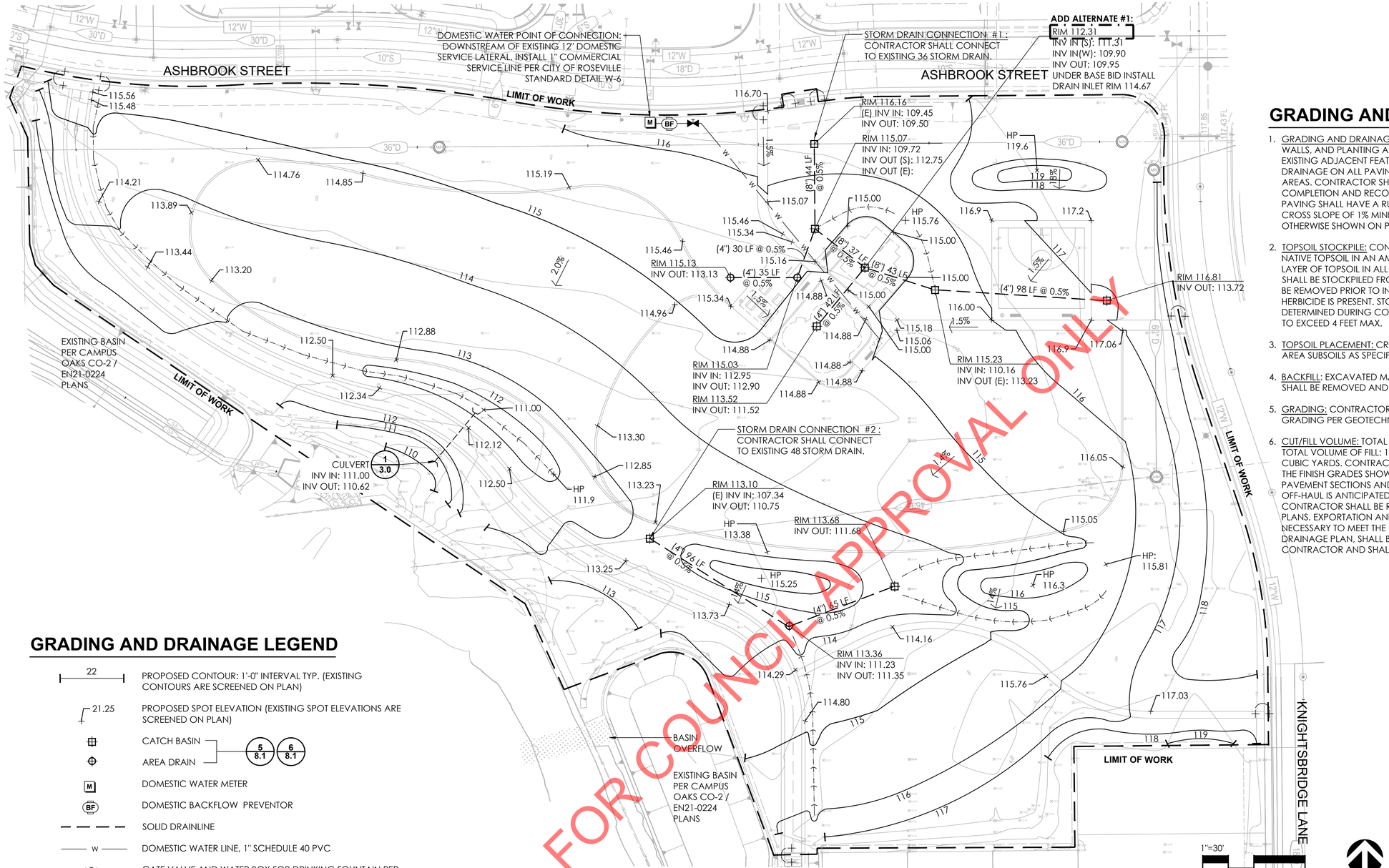

GRADING AND DRAINAGE LEGEND

- PROPOSED CONTOUR: 1'-0" INTERVAL TYP. (EXISTING CONTOURS ARE SCREENED ON PLAN)
- PROPOSED SPOT ELEVATION (EXISTING SPOT ELEVATIONS ARE SCREENED ON PLAN)
- CATCH BASIN
- AREA DRAIN
- DOMESTIC WATER METER
- DOMESTIC BACKFLOW PREVENTOR
- SOLID DRAINLINE
- DOMESTIC WATER LINE, 1" SCHEDULE 40 PVC
- GATE VALVE AND WATER BOX FOR DRINKING FOUNTAIN PER CITY OF ROSEVILLE DETAIL PK-23
- DIRECTION AND PERCENT SLOPE OF SHEET DRAINAGE
- SWALE
- RIM XXX.XX / INV XXX.XX — RIM ELEVATION AT PROPOSED DRAINAGE STRUCTURE / INVERT ELEVATION AT PROPOSED DRAINAGE STRUCTURE
- FLUSH CONDITION
- ADJUST EXISTING MANHOLE TO FINISHED GRADE

ADD ALTERNATE #5: BIKE TRAIL CONNECTION

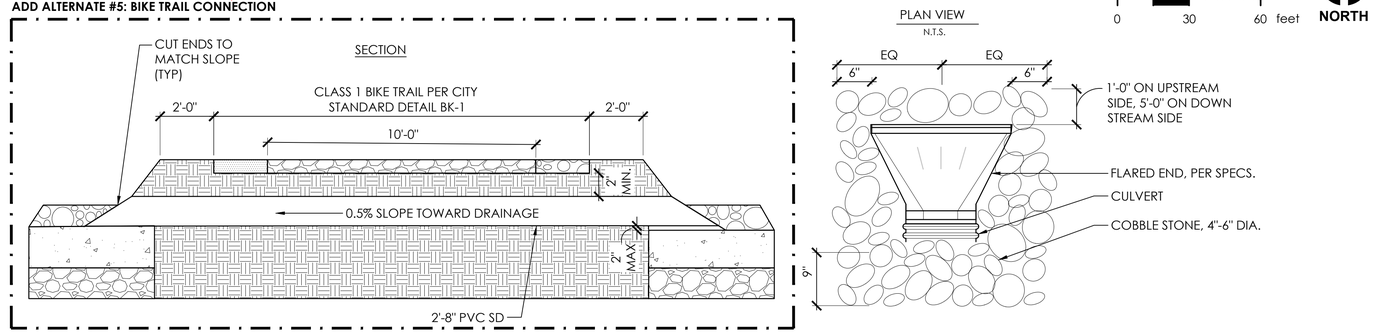

1/3.0 CULVERT
3/8" = 1'-0"

P-25-034-52

GRADING AND DRAINAGE NOTES

1. GRADING AND DRAINAGE: ALL PROPOSED PAVING, CURBS, WALLS, AND PLANTING AREAS SHALL SMOOTHLY CONFORM TO EXISTING ADJACENT FEATURES TO REMAIN. PROVIDE POSITIVE DRAINAGE ON ALL PAVING AND THROUGHOUT ALL PLANTING AREAS. CONTRACTOR SHALL FLOOD PAVED AREAS UPON COMPLETION AND RECONSTRUCT ANY LOW SPOTS AS DIRECTED. PAVING SHALL HAVE A RUNNING SLOPE OF 5% MAXIMUM WITH A CROSS SLOPE OF 1% MINIMUM TO 1.8% MAXIMUM UNLESS OTHERWISE SHOWN ON PLANS.
2. TOPSOIL STOCKPILE: CONTRACTOR MAY STRIP AND STOCKPILE NATIVE TOPSOIL IN AN AMOUNT SUFFICIENT TO INSTALL THE 6" LAYER OF TOPSOIL IN ALL PROPOSED PLANTING AREAS. NO SOIL SHALL BE STOCKPILED FROM BENEATH EXISTING PAVED AREAS TO BE REMOVED PRIOR TO INDEPENDENT LAB VERIFICATION THAT NO HERBICIDE IS PRESENT. STOCKPILE LOCATION(S) TO BE DETERMINED DURING CONSTRUCTION. STOCKPILE HEIGHT NOT TO EXCEED 4 FEET MAX.
3. TOPSOIL PLACEMENT: CROSS-RIP ALL ROUGH-GRADED PLANTING AREA SUBSOILS AS SPECIFIED PRIOR TO TOPSOIL PLACEMENT.
4. BACKFILL: EXCAVATED MATERIAL NOT SUITABLE FOR BACKFILLING SHALL BE REMOVED AND LEGALLY DISPOSED OF OFF-SITE.
5. GRADING: CONTRACTOR SHALL PERFORM ALL EARTHWORK AND GRADING PER GEOTECHNICAL ENGINEER'S RECOMMENDATIONS.
6. CUT/FILL VOLUME: TOTAL VOLUME OF CUT: 1,645 CUBIC YARDS. TOTAL VOLUME OF FILL: 1,617 CUBIC YARDS. TOTAL NET CUT: 28 CUBIC YARDS. CONTRACTOR TO CONSTRUCT IMPROVEMENTS TO THE FINISH GRADES SHOWN, MAKING PROPER ALLOWANCES FOR PAVEMENT SECTIONS AND FIELD DRAINAGE SECTION SOIL OFF-HAUL IS ANTICIPATED AND SHALL BE BID LUMP SUMP. CONTRACTOR SHALL BE RESPONSIBLE FOR TAKEOFFS BASED ON PLANS. EXPORTATION AND IMPORTATION OF SOIL, WHICH MAY BE NECESSARY TO MEET THE GRADES SHOWN ON THE GRADING AND DRAINAGE PLAN, SHALL BE THE RESPONSIBILITY OF THE CONTRACTOR AND SHALL BE PART OF THIS CONTRACT.

CALA
12150 Tributary Point Drive, Suite 140
Gold River, CA 95670
T 916.985.4366
www.callanderassociates.com

REVISION	DATE

LICENSED LANDSCAPE ARCHITECT — Signature — May 31, 2027 Renewal Date — Date — STATE OF CALIFORNIA

CO-61 PARK
5125 ASHBROOK ST, ROSEVILLE, CA 95747

SUBMITTAL	DATE
30% Submittal	09/30/25
99% Submittal	11/18/25
100% Submittal	02/09/26

PROJECT NO: 25034
DRAWN BY: CM/DS
CHECKED BY: BW
SCALE: As Shown

SHEET TITLE
GRADING & DRAINAGE PLAN

SHEET
3.0
6 OF 28

811 Know what's below. Call before you dig.

File Path: T:\Projects\2025\25034_CO61Park\3_ConstructionDocuments\25034_G2i.dwg Plot Date: 2/10/26 Saved By: Cma
Copyright © 2025 Callander Associates Landscape Architecture, Inc.

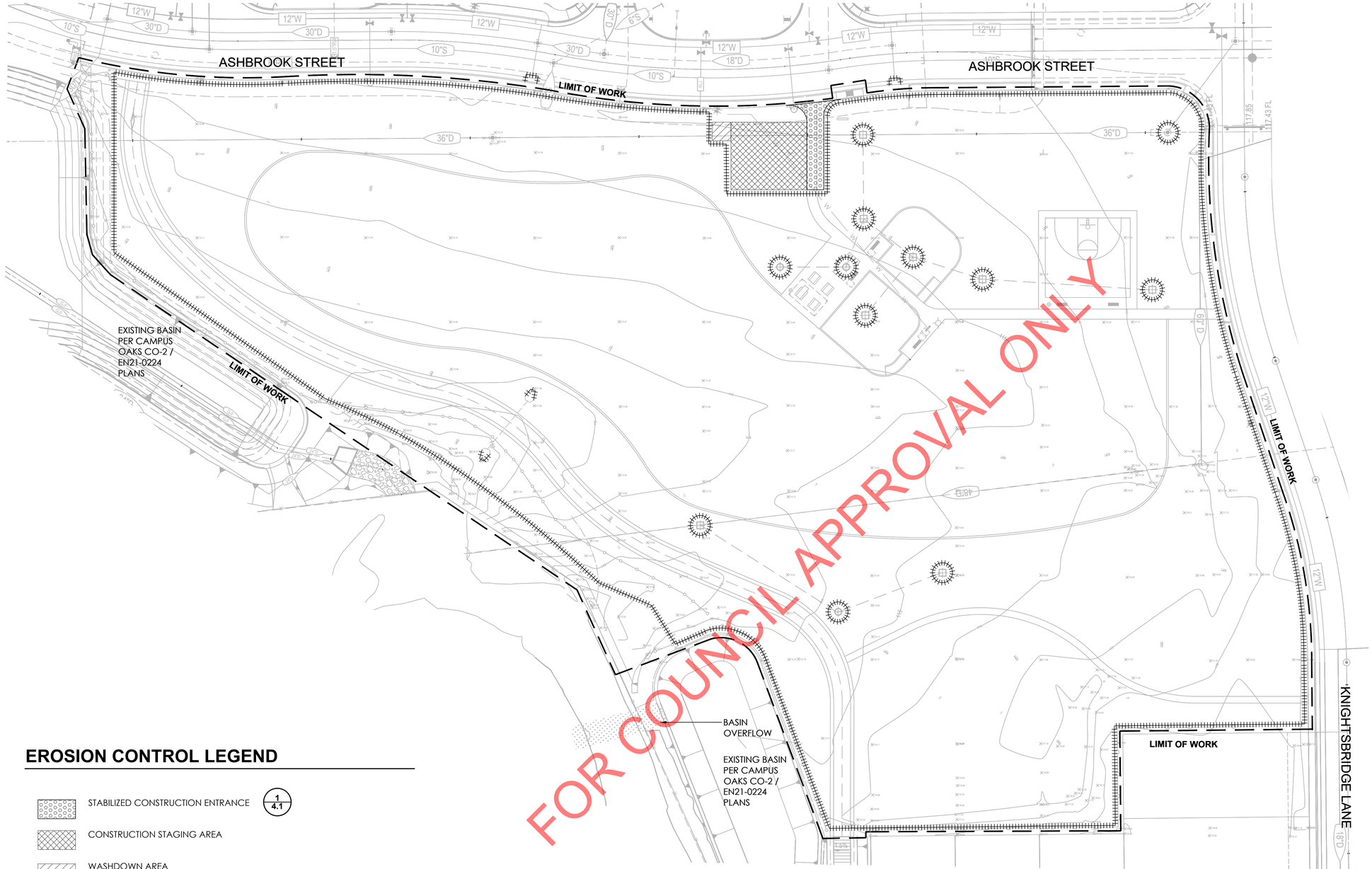

FOR COUNCIL APPROVAL ONLY
FOR COUNCIL APPROVAL ONLY

EROSION CONTROL LEGEND

- STABILIZED CONSTRUCTION ENTRANCE (1/4.1)
- CONSTRUCTION STAGING AREA
- WASHDOWN AREA
- FIBER ROLL (2/4.1)
- STORM DRAIN INLET PROTECTION (5/4.1) (6/4.1)
- GRADING STRUCTURE, SEE GRADING AND DRAINAGE PLAN

*PROJECT SWPPP SHALL BE THE DOCUMENT OF RECORD

FOR EROSION CONTROL NOTES
REFER TO SHEET 4.1

CALA
12150 Tributary Point Drive, Suite 140
Gold River, CA 95670
T 916.985.4366
www.callanderassociates.com

REVISION	DATE

LICENSED LANDSCAPE ARCHITECT
Signature
May 31, 2027
Renewal Date
Date
STATE OF CALIFORNIA

CO-61 PARK

5125 ASHBBROOK ST,
ROSEVILLE, CA 95747

SUBMITTAL	DATE
30% Submittal	09/30/25
99% Submittal	11/18/25
100% Submittal	02/09/26

PROJECT NO:	25034
DRAWN BY:	CM/DS
CHECKED BY:	BW
SCALE:	As Shown

SHEET TITLE
EROSION CONTROL PLAN

SHEET
4.0
7 OF 28

811 Know what's below. Call before you dig.

File Path: I:\Projects\2025\25034_COA\Park\3_Construction\Documents\25034_EC.dwg Plot Date: 2/9/26 Saved By: Cmo
Copyright © 2025 Callander Associates Landscape Architecture, Inc.

EROSION CONTROL NOTES

1. GENERAL PERMIT REQUIREMENTS: CONTRACTOR SHALL REFER TO THE GUIDELINES FOR THE CURRENT NATIONAL POLLUTANT DISCHARGE ELIMINATION SYSTEM (NPDES) GENERAL PERMIT (CAS000002) AND THE STATE OF CALIFORNIA'S GENERAL PERMIT (ORDER 2009-0009-DWQ), INCLUDING BUT NOT LIMITED TO REQUIREMENTS FOR UPLOADING REQUIRED DATA TO THE STORMWATER MULTI-APPLICATION REPORT TRACKING SYSTEM (SMARTS).

2. IMPLEMENTATION: THE CONTRACTOR SHALL HAVE AN APPROVED QUALIFIED SWPPP PRACTITIONER (QSP), OR THEIR APPOINTED INDIVIDUAL, ON SITE DURING ALL PERIODS OF CONSTRUCTION. THE QSP IS RESPONSIBLE FOR THE IMPLEMENTATION OF BMP'S AND THE MONITORING AND RECORDING OF EROSION AND SEDIMENT CONTROL MEASURES DURING CONSTRUCTION.

3. RAIN EVENT ACTION PLAN: CONTRACTOR MUST ENSURE THAT THE CONSTRUCTION SITE IS PREPARED PRIOR TO THE ONSET OF ANY STORM. A RAIN EVENT ACTION PLAN (REAP), AS SPECIFIED IN THE SWPPP, MUST BE IMPLEMENTED TO PROTECT ALL EXPOSED PORTIONS OF THE SITE WITHIN 48 HOURS PRIOR TO ANY LIKELY PRECIPITATION EVENT. CONTRACTOR SHALL HAVE ALL EROSION AND SEDIMENT CONTROL MEASURES IN PLACE FOR CONSTRUCTION.

4. EROSION AND SEDIMENT CONTROL: ALL EROSION AND SEDIMENT CONTROL MEASURES SHALL BE MAINTAINED UNTIL DISTURBED AREAS ARE STABILIZED. CHANGES TO THE EROSION AND SEDIMENT CONTROL PLAN SHALL BE MADE TO MEET FIELD CONDITIONS ONLY WITH THE APPROVAL OF OR AT THE DIRECTION OF A REPRESENTATIVE OF THE CITY/OWNER AND THE QSP.

5. FIELD CHANGES: THIS PLAN MAY NOT COVER ALL THE SITUATIONS THAT ARISE DURING CONSTRUCTION DUE TO UNANTICIPATED FIELD CONDITIONS. VARIATIONS MAY BE MADE TO THE PLAN IN THE FIELD SUBJECT TO THE APPROVAL OF OR AT THE DIRECTION OF A REPRESENTATIVE OF THE CITY AND THE QSP.

6. MAINTENANCE MEASURES: ALL EROSION AND SEDIMENT CONTROL MEASURES SHALL BE CHECKED WEEKLY DURING PERIODS OF HEAVY USAGE, BI-WEEKLY DURING PERIODS OF NORMAL USAGE AND BEFORE AND AFTER ALL STORM EVENTS TO ENSURE MEASURES ARE FUNCTIONING PROPERLY.

7. BMP LOG: QSP SHALL MAINTAIN A LOG AT THE SITE OF ALL INSPECTIONS OR MAINTENANCE OF BMPS, AS WELL AS, ANY CORRECTIVE CHANGES TO THE BMPS OR EROSION AND SEDIMENT CONTROL PLAN. CONTRACTOR IS REQUIRED TO NOTIFY THE QUALIFIED STORMWATER DEVELOPER (QSD) OF ANY CHANGES TO THE EROSION AND SEDIMENT CONTROL MEASURES SPECIFIED IN THE SWPPP.

8. EXPOSED SOILS: IN AREAS WHERE SOIL IS EXPOSED, PROMPT REPLANTING WITH NATIVE COMPATIBLE, DROUGHT-RESISTANT VEGETATION SHALL BE PERFORMED. NO AREAS WILL BE LEFT EXPOSED OVER THE WINTER SEASON.

9. STABILIZED CONSTRUCTION ENTRANCE: THE CONTRACTOR SHALL INSTALL THE STABILIZED CONSTRUCTION ENTRANCE PRIOR TO COMMENCEMENT OF GRADING. LOCATION OF THE ENTRANCE MAY BE ADJUSTED BY THE CONTRACTOR TO FACILITATE GRADING OPERATIONS. ALL CONSTRUCTION TRAFFIC ENTERING THE PAVED ROAD MUST CROSS THE STABILIZED CONSTRUCTION ENTRANCE.

10. ROAD AND TIRE CLEANING: ALL SEDIMENT DEPOSITED ON PAVED ROADWAYS SHALL BE REMOVED AT THE END OF EACH WORKING DAY. ALL TRUCK TIRES SHALL BE CLEANED PROPERLY BEFORE LEAVING THE SITE.

11. FIBER ROLL BARRIER: CONTRACTOR SHALL PLACE FIBER ROLL BARRIER AROUND ALL NEW DRAINAGE STRUCTURE OPENINGS IMMEDIATELY AFTER THE STRUCTURE OPENING IS CONSTRUCTED. THESE FIBER ROLL BARRIERS SHALL BE MAINTAINED AND REMAIN IN PLACE UNTIL CONSTRUCTION IS COMPLETED.

12. GENERAL HOUSEKEEPING: CONTRACTOR SHALL IMPLEMENT HOUSEKEEPING PRACTICES PER THE SWPPP PREPARED FOR THIS PROJECT AND THE REQUIREMENTS OF THE GENERAL PERMIT.

13. TRENCHES: AFTER SEWER AND UTILITY TRENCHES ARE BACKFILLED AND COMPACTED, THE SURFACES OVER SUCH TRENCHES SHALL BE MOUNDED SLIGHTLY TO PREVENT CHANNELING OF WATER IN THE TRENCH AREA. CARE SHOULD BE EXERCISED TO PROVIDE FOR CROSS-FLOW AT FREQUENT INTERVALS.

14. CONTRACTOR RESPONSIBILITY: THE CONTRACTOR SHALL BE RESPONSIBLE FOR ALL COSTS INCURRED WITH ALL TEMPORARY AND PERMANENT EROSION AND SEDIMENT CONTROL MEASURE MAINTENANCE THROUGHOUT THE DURATION OF THE PROJECT.

15. DAMAGED EROSION CONTROL DEVICES: DAMAGED EROSION CONTROL DEVICES SHALL BE REPAIRED OR REPLACED BY THE CONTRACTOR AS SOON AS PRACTICAL AFTER THE DAMAGE OCCURS.

16. DAILY WATERING: DURING GRADING OPERATIONS THE SITE SHALL BE WATERED ON A DAILY BASIS TO MINIMIZE THE RELEASE OF DUST AND OTHER PARTICULATE MATTER.

17. ANNUAL STATUS REPORT: IT IS THE CONTRACTOR'S RESPONSIBILITY TO COMPLETE AND SUBMIT THE ANNUAL COMPLIANCE STATUS REPORT OF THE CONSTRUCTION STORM WATER PERMIT EACH YEAR.

18. SPECIFICATIONS: SEE ALSO STORMWATER POLLUTION PREVENTION SPECIFICATIONS.

19. STORMWATER TREATMENT REQUIREMENTS: PROJECT CONTAINS LESS THAN 10,000 SQUARE FEET OF IMPERVIOUS AREA AND IS NOT A C.3 REGULATED PROJECT.

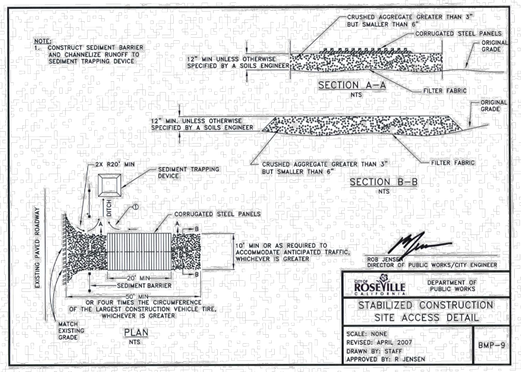

1 / 4.1 STABILIZED CONSTRUCTION SITE ACCESS

N.T.S. P-25-034-40

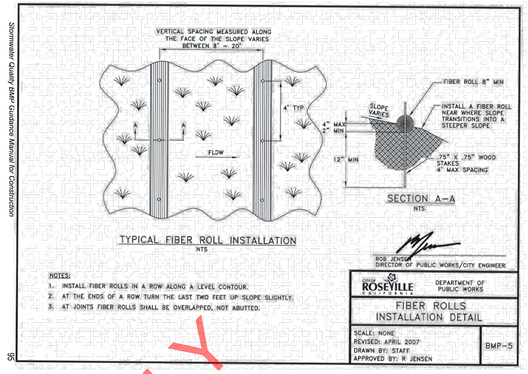

2 / 4.1 FIBER ROLL INSTALLATION

N.T.S. P-25-034-38

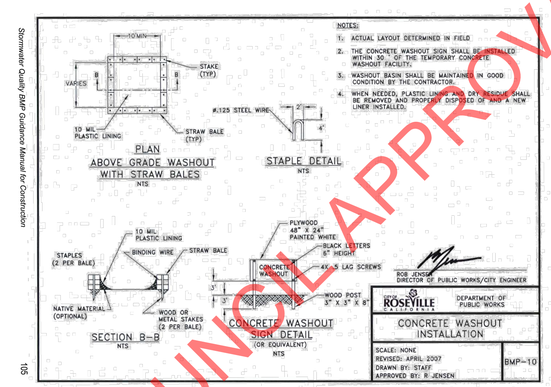

3 / 4.1 CONCRETE WASHOUT

N.T.S. P-25-034-41

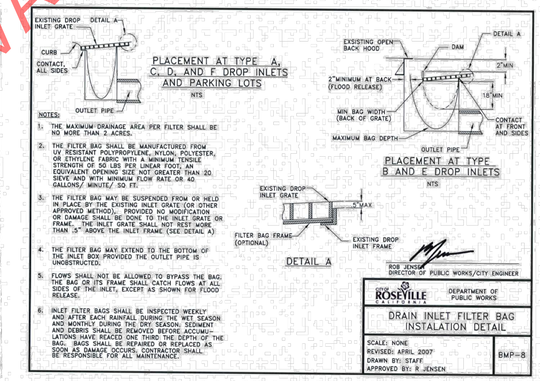

4 / 4.1 DRAIN INLET FILTER BAG

N.T.S. P-25-034-39

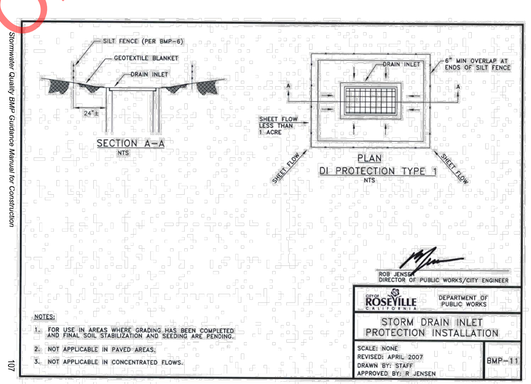

5 / 4.1 STORM DRAIN INLET PROTECTION

N.T.S. P-25-034-42

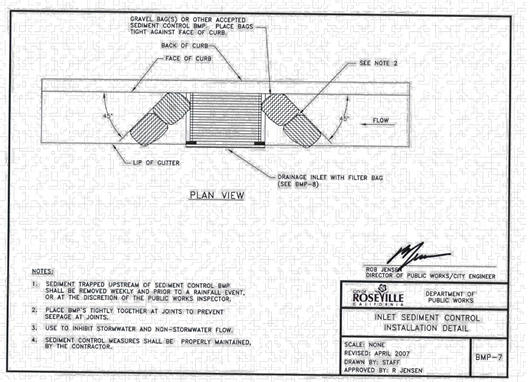

6 / 4.1 INLET SEDIMENT CONTROL

N.T.S. P-25-034-43

FOR COUNCIL APPROVAL ONLY

CALA
12150 Tributary Point Drive, Suite 140
Gold River, CA 95670
T 916.985.4366
www.callanderassociates.com

REVISION	DATE

LANDSCAPE ARCHITECT — RUTH M. BUTLER — Signature — May 31, 2007 Renewal Date — Date — STATE OF CALIFORNIA

CO-61 PARK

5125 ASHBROOK ST,
ROSEVILLE, CA 95747

SUBMITTAL	DATE
30% Submittal	09/30/25
99% Submittal	11/18/25
100% Submittal	02/09/26

PROJECT NO:	25034
DRAWN BY:	CM/DS
CHECKED BY:	BW
SCALE:	As Shown

SHEET TITLE
EROSION CONTROL PLAN

SHEET
4.1
8 OF 28

File Path: T:\Projects\2025\25034.CO61Park\3_ConstructionDocuments\25034_EC.dwg Plot Date: 2/9/26 Saved By: Cmo
Copyright © 2025 Callander Associates Landscape Architecture, Inc.

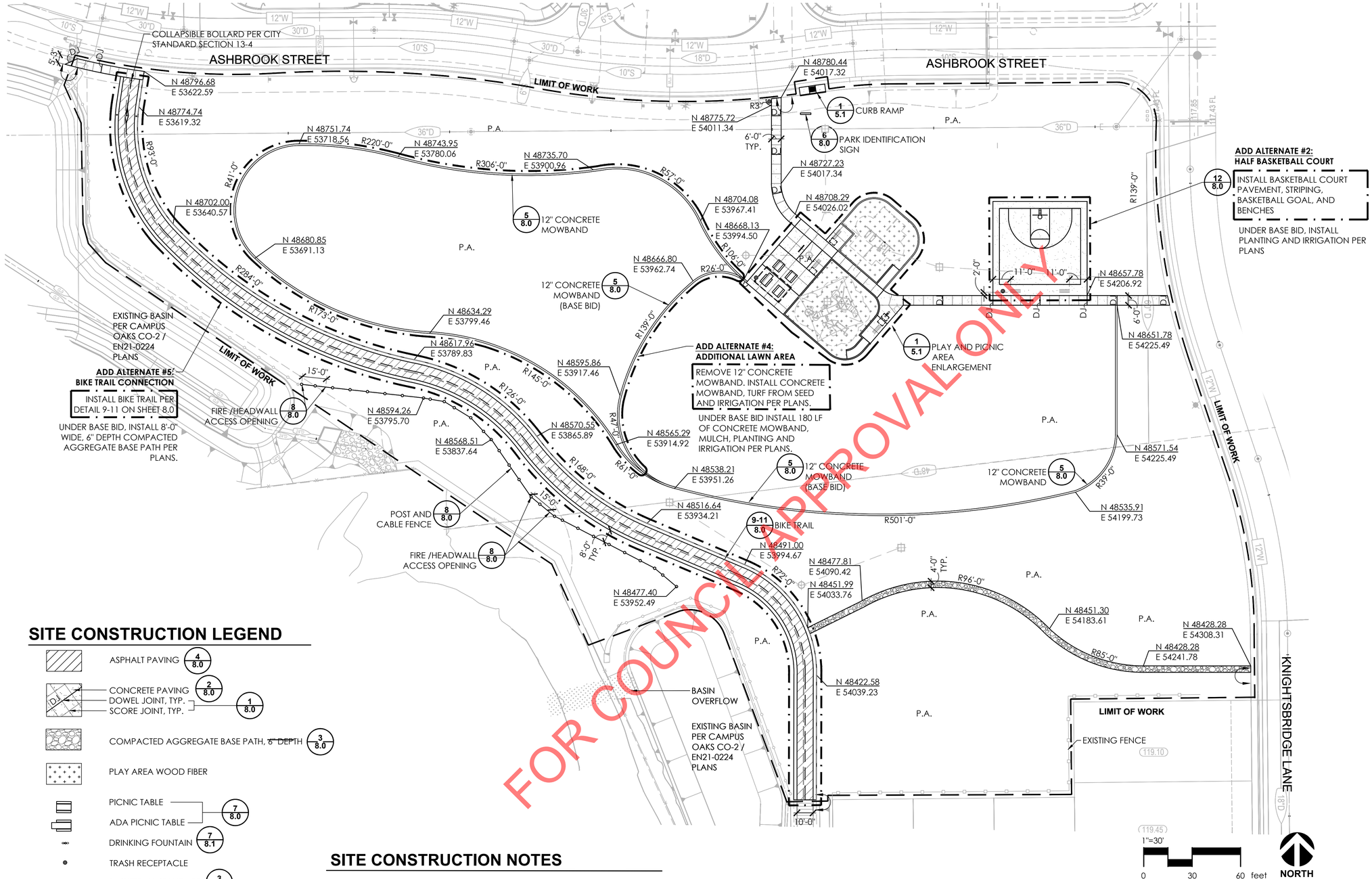

FOR COUNCIL APPROVAL ONLY

SITE CONSTRUCTION LEGEND

- ASPHALT PAVING (4 / 8.0)
- CONCRETE PAVING (2 / 8.0)
- DOWEL JOINT, TYP.
- SCORE JOINT, TYP. (1 / 8.0)
- COMPACTED AGGREGATE BASE PATH, 6" DEPTH (3 / 8.0)
- PLAY AREA WOOD FIBER
- PICNIC TABLE
- ADA PICNIC TABLE (7 / 8.0)
- DRINKING FOUNTAIN (7 / 8.1)
- TRASH RECEPTACLE
- BASKETBALL STANDARD (3 / 5.1)
- BENCH (7 / 8.0)
- CONCRETE MOWBAND
- POST AND CABLE FENCE (8 / 8.0)
- LIGHT FIXTURE, REFER TO ELECTRICAL PLAN
- P.A. PLANTING AREA
- ALIGN

SITE CONSTRUCTION NOTES

1. DIMENSIONS: ALL WRITTEN DIMENSIONS SUPERSEDE SCALED DIMENSIONS. ALL DIMENSIONS ARE TO FACE OF CURB OR WALL, EDGE OF CONCRETE, FLATWORK/MOWBAND, OR CENTERLINE OF FENCE.
2. DOWEL COLD JOINTS: INSTALL DOWEL COLD JOINTS PER CITY STANDARDS BETWEEN CONCRETE FLATWORK AND WALLS, CURBS, AND EXISTING FLATWORK OR STRUCTURES.
3. SLEEVING: REFER TO IRRIGATION PLAN FOR REQUIREMENTS OF SLEEVING UNDER PAVEMENT.
4. PROJECT STAKING: ALL PROPOSED SITE FEATURES SHALL BE STAKED IN FIELD FOR REVIEW BY THE CITY'S REPRESENTATIVE PRIOR TO CONSTRUCTION. ALL CURVES SHALL BE SMOOTH AND CONTINUOUS WITH CAREFULLY MATCHED TANGENTS.
5. COLOR OF SITE AMENITIES ANDD SHADE TO BE SELECTED BY CITY,

CALA
12150 Tributary Point Drive, Suite 140
Gold River, CA 95670
T 916.985.4366
www.callanderassociates.com

REVISION	DATE

LICENSED LANDSCAPE ARCHITECT — Signature — May 31, 2027 Renewal Date — Date — STATE OF CALIFORNIA

CO-61 PARK
5125 ASHBROOK ST,
ROSEVILLE, CA 95747

SUBMITTAL	DATE
30% Submittal	09/30/25
99% Submittal	11/18/25
100% Submittal	02/09/26

PROJECT NO: 25034
DRAWN BY: CM/DS
CHECKED BY: BW
SCALE: As Shown

SHEET TITLE
LAYOUT PLAN

SHEET
5.0
9 OF 28

811 Know what's below. Call before you dig.

File Path: I:\Projects\2025\25034.CO61Park\3.ConstructionDocuments\25034_LP.dwg Plot Date: 2/19/26 Saved By: Cma
Copyright © 2025 Callander Associates Landscape Architecture, Inc.

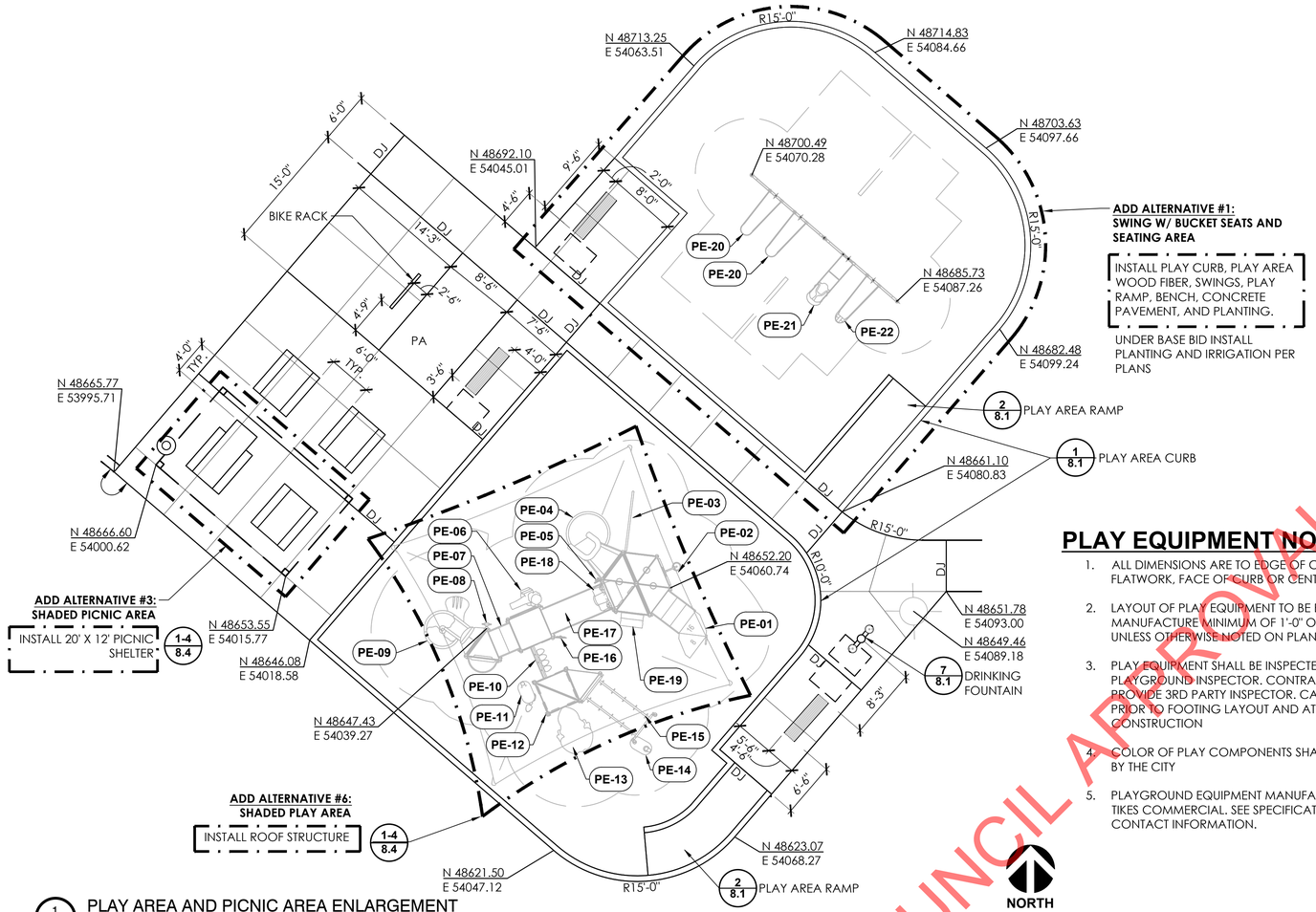

1 / 5.1 PLAY AREA AND PICNIC AREA ENLARGEMENT

1/8" = 1'-0"

ADD ALTERNATIVE #5:

REFERENCE NOTES SCHEDULE

CODE	DESCRIPTION	DETAIL
PLAY EQUIPMENT		
PE-01	TRANSFER STATION WITH SAFETY RAILS	
PE-02	TREEHOUSE CURLY CLIMBER	
PE-03	HDPE STEEL ARCH CLIMB	
PE-04	SPIRAL SLIDE	
PE-05	POST PLAYERS DBL CHIMES	
PE-06	TREE CLIMB	
PE-07	DECK TO DECK STEPS	
PE-08	POST WHEEL PLASTIC	
PE-09	QUANTUM II SPIRAL	
PE-10	DECK TO DECK POD CLIMBER	
PE-11	CATTAIL CLIMB	
PE-12	SAFETY LOOP	
PE-13	FROG CLIMBER	
PE-14	CATTAIL POST TOPPER	
PE-15	DOUBLE RING TREK	
PE-16	MINI SENSORY FIDGET INSERT	
PE-17	ARCHED BRIDGE WITH SAFETY RAILS	
PE-18	ANIMAL CRAWL TUNNEL	
PE-19	NU-EDGE ROCK WALL	
ADD ALTERNATE #1 SWING AREA		
PE-20	BELT SEAT	
PE-21	INCLUSIVE SEAT	
PE-22	TOT SEAT	

PLAY EQUIPMENT NOTES

1. ALL DIMENSIONS ARE TO EDGE OF CONCRETE FLATWORK, FACE OF CURB OR CENTERLINE OF POST.
2. LAYOUT OF PLAY EQUIPMENT TO BE BY MANUFACTURE MINIMUM OF 1'-0" OF PLAY CURB, UNLESS OTHERWISE NOTED ON PLANS.
3. PLAY EQUIPMENT SHALL BE INSPECTED BY A CERTIFIED PLAYGROUND INSPECTOR. CONTRACTOR TO PROVIDE 3RD PARTY INSPECTOR. CALL 48 HOURS PRIOR TO FOOTING LAYOUT AND AT FINAL CONSTRUCTION
4. COLOR OF PLAY COMPONENTS SHALL BE SELECTED BY THE CITY
5. PLAYGROUND EQUIPMENT MANUFACTURER: LITTLE TIKES COMMERCIAL. SEE SPECIFICATIONS FOR CONTACT INFORMATION.

FOR COUNCIL APPROVAL ONLY

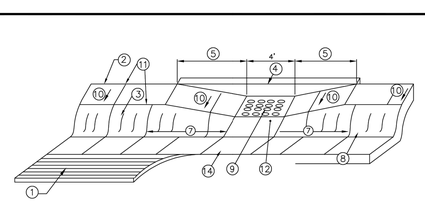

NOTES:

1. STREET PAVEMENT.
2. STANDARD SIDEWALK WIDTH IS 5 FEET FOR COMMERCIAL AND 4 FEET FOR RESIDENTIAL (BACK OF WALK TO BACK OF CURB FOR BOTH UNLESS SHOWN OTHERWISE ON PLANS).
3. TOP FACE OF CURB, STANDARD 6 INCH HIGH FOR COMMERCIAL, 5-5/8 INCH FOR RESIDENTIAL.
4. 6 INCH WIDE RETAINING CURB, HEIGHT TO BE DETERMINED BY PROJECTED BACK OF WALK GRADE. POUR MONOLITHIC WITH SIDEWALK; MINIMUM DEPTH SECTION FLUSH WITH BOTTOM OF SIDEWALK.
5. THE MAXIMUM 8.33%. FOR CASE C RAMPS, ON STEEPER GRADES WHERE 8.33% CANNOT BE ACHIEVED, 25 FEET IS THE MAXIMUM LENGTH TRANSITION REQUIRED.
6. N/A
7. "TOOL JOINT" SEE DETAIL ST-13.
8. GUTTER PAN, FLOW LINE.
9. TRUNCATED DOMES: SEE SECTION 71-4 C.2. AND 71-5 OF THE CONSTRUCTION STANDARDS FOR REQUIRED PRODUCT OR APPROVED EQUAL INFORMATION. 1% TO 2% GRADE TO STREET.
10. CROSS-GRADE SHALL BE 1% MIN, 2% MAX. (LANDING 1% MIN. TO STREET). PLEASE REFER TO SECTION 71-4.C.4.
11. SCORE MARK TYPICAL.
12. ACROSS THE 4 FOOT WIDTH OF THE CURB RAMP OPENING, THE TOP OF CURB SHALL BE SLOPED UP FROM THE FLOWLINE TO THE BACK OF RAMP LANDING 1% TO 2% SLOPE.
13. ALL CONCRETE SHALL BE "MINOR CONCRETE" AS DEFINED IN SECTION 71-5B OF THESE STANDARDS.
14. GUTTER PAN CROSS SLOPE NOT TO EXCEED 5% MAX.

MARC STOUT
CITY ENGINEER

CITY OF ROSEVILLE CALIFORNIA — DEVELOPMENT SERVICES DEPARTMENT

CASE "C" PEDESTRIAN CURB RAMP ATTACHED SIDEWALK

SCALE: NONE
REVISED: JANUARY, 2025
DRAWN BY: J HENDRIX
APPROVED BY: MARC STOUT

ST-26

1 / 5.1 CURB RAMP

N.T.S.

P-25-034-68

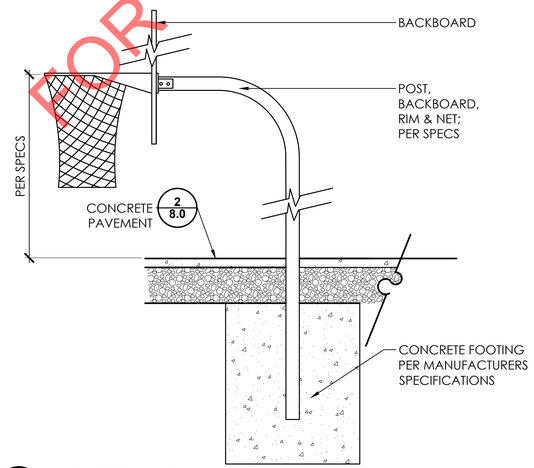

3 / 5.1 BASKETBALL STANDARD

3/4" = 1'-0"

P-CLA-06-01.dwg

FOR SITE CONSTRUCTION NOTES AND LEGEND REFER TO SHEET 5.0

Know what's below. Call before you dig.

CALA
12150 Tributary Point Drive, Suite 140
Gold River, CA 95670
T 916.985.4366
www.callanderassociates.com

REVISION	DATE

REGISTERED LANDSCAPE ARCHITECT — KEITH RITTER — 4815 — Signature — May 31, 2027 Renewal Date — Date — STATE OF CALIFORNIA

CO-61 PARK

5125 ASHBBROOK ST,
ROSEVILLE, CA 95747

SUBMITTAL	DATE
30% Submittal	09/30/25
99% Submittal	11/18/25
100% Submittal	02/09/26

PROJECT NO: 25034
DRAWN BY: CM/DS
CHECKED BY: BW
SCALE: As Shown

SHEET TITLE
LAYOUT PLAN

SHEET
5.1
10 OF 28

File Path: T:\Projects\2025\25034_CO61Park\L3_Construction\Documents\25034_LP.dwg Plot Date: 2/9/26 Saved By: Cma
Copyright © 2025 Callander Associates Landscape Architecture, Inc.

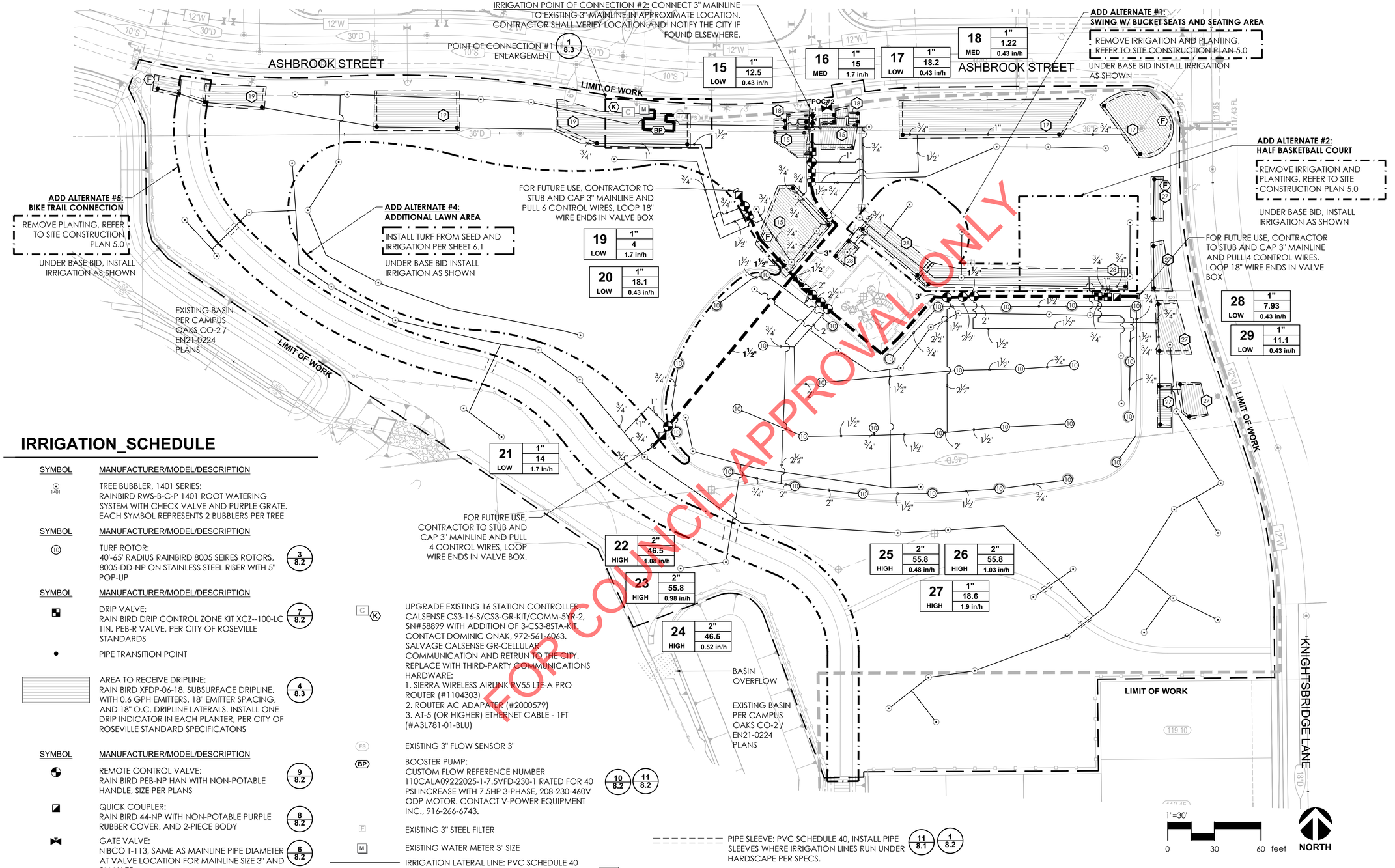

FOR COUNCIL APPROVAL ONLY

IRRIGATION_SCHEDULE

SYMBOL	MANUFACTURER/MODEL/DESCRIPTION	
⊙ 1401	TREE BUBBLER, 1401 SERIES: RAINBIRD RWS-B-C-P 1401 ROOT WATERING SYSTEM WITH CHECK VALVE AND PURPLE GRATE. EACH SYMBOL REPRESENTS 2 BUBBLERS PER TREE	
SYMBOL	MANUFACTURER/MODEL/DESCRIPTION	
⑩	TURF ROTOR: 40'-65' RADIUS RAINBIRD 8005 SEIRES ROTORS, 8005-DD-NP ON STAINLESS STEEL RISER WITH 5" POP-UP	3 8.2
SYMBOL	MANUFACTURER/MODEL/DESCRIPTION	
■	DRIP VALVE: RAIN BIRD DRIP CONTROL ZONE KIT XCZ--100-LC 1IN. PEB-R VALVE, PER CITY OF ROSEVILLE STANDARDS	7 8.2
•	PIPE TRANSITION POINT	
▭	AREA TO RECEIVE DRIPLINE: RAIN BIRD XFDP-06-18, SUBSURFACE DRIPLINE, WITH 0.6 GPH EMITTERS, 18" EMITTER SPACING, AND 18" O.C. DRIPLINE LATERALS. INSTALL ONE DRIP INDICATOR IN EACH PLANTER, PER CITY OF ROSEVILLE STANDARD SPECIFICATONS	4 8.3
SYMBOL	MANUFACTURER/MODEL/DESCRIPTION	
◕	REMOTE CONTROL VALVE: RAIN BIRD PEB-NP HAN WITH NON-POTABLE HANDLE, SIZE PER PLANS	9 8.2
◪	QUICK COUPLER: RAIN BIRD 44-NP WITH NON-POTABLE PURPLE RUBBER COVER, AND 2-PIECE BODY	8 8.2
⋈	GATE VALVE: NIBCO T-113, SAME AS MAINLINE PIPE DIAMETER AT VALVE LOCATION FOR MAINLINE SIZE 3" AND SMALLER.	6 8.2
MV	EXISTING MASTER VALVE 2-1/2" SIZE	
F	FLUSH VALVE: SCHEDULE 40 PVC BALL VALVE WITH BRASS HOSE THREAD ADAPTER, PER CITY OF ROSEVILLE STANDARDS	3 8.3

C K UPGRADE EXISTING 16 STATION CONTROLLER CALSENSE CS3-16-S/CS3-GR-KIT/COMM-5YR-2, SN#58899 WITH ADDITION OF 3-CS3-8STA-KIT. CONTACT DOMINIC ONAK, 972-561-6063. SALVAGE CALSENSE GR-CELLULAR COMMUNICATION AND RETRUN TO THE CITY. REPLACE WITH THIRD-PARTY COMMUNICATIONS HARDWARE:
1. SIERRA WIRELESS AIRLINK RV55 LTE-A PRO ROUTER (#1104303)
2. ROUTER AC ADAPATER (#2000579)
3. AT-5 (OR HIGHER) ETHERNET CABLE - 1FT (#A3L781-01-BLU)

FS EXISTING 3" FLOW SENSOR 3"

BP BOOSTER PUMP: CUSTOM FLOW REFERENCE NUMBER 110CALA09222025-1-7.5VFD-230-1 RATED FOR 40 PSI INCREASE WITH 7.5HP 3-PHASE, 208-230-460V ODP MOTOR. CONTACT V-POWER EQUIPMENT INC., 916-266-6743. (10 8.2) (11 8.2)

F EXISTING 3" STEEL FILTER

M EXISTING WATER METER 3" SIZE

IRRIGATION LATERAL LINE: PVC SCHEDULE 40 PURPLE PIPE FOR RELCAIMED WATER SIZE PER PLANS

DRIP HEADER: PVC CLASS SCHEDULE 40, 3/4" SIZE (11 8.1) (1 8.2)

EXISTING IRRIGATION MAINLINE

IRRIGATION MAINLINE: SHALL BE PVC SCHEDULE 40 FOR MAINLINE 2-1/2" OR SMALLER. PVC SDR 21, CLASS 200 RUBBER GASKETED PIPE FOR MAINLINE 3" OR LARGER. SIZE PER PLANS. MAINLINE SHALL BE PURPLE PIPE FOR RECLAIMED WATER.

PIPE SLEEVE: PVC SCHEDULE 40, INSTALL PIPE SLEEVES WHERE IRRIGATION LINES RUN UNDER HARDSCAPE PER SPECS. (11 8.1) (1 8.2)

17 VALVE NUMBER FOR DRIP AREA

VALVE CALLOUT
X — VALVE NUMBER
— VALVE SIZE
X — VALVE FLOW
X — PRECIPITATION RATE
X — WATER-USE

FOR IRRIGATION NOTES REFER TO SHEET L6.1

811 Know what's below. Call before you dig.

CALA
12150 Tributary Point Drive, Suite 140
Gold River, CA 95670
T 916.985.4366
www.callanderassociates.com

REVISION	DATE

LICENSED LANDSCAPE ARCHITECT — Signature — May 31, 2027 Renewal Date — Date — STATE OF CALIFORNIA

CO-61 PARK
5125 ASHBROOK ST, ROSEVILLE, CA 95747

SUBMITTAL	DATE
30% Submittal	09/30/25
99% Submittal	11/18/25
100% Submittal	02/09/26

PROJECT NO: 25034
DRAWN BY: CM/DS
CHECKED BY: BW
SCALE: As Shown

SHEET TITLE
IRRIGATION PLAN- BASE BID

SHEET 6.0
11 OF 28

File Path: I:\Projects\2025\25034.CO61Park\3.Construction\Document\25034_IR.dwg Plot Date: 2/9/26 Saved By: Cmo
Copyright © 2026 Callander Associates Landscape Architecture, Inc.

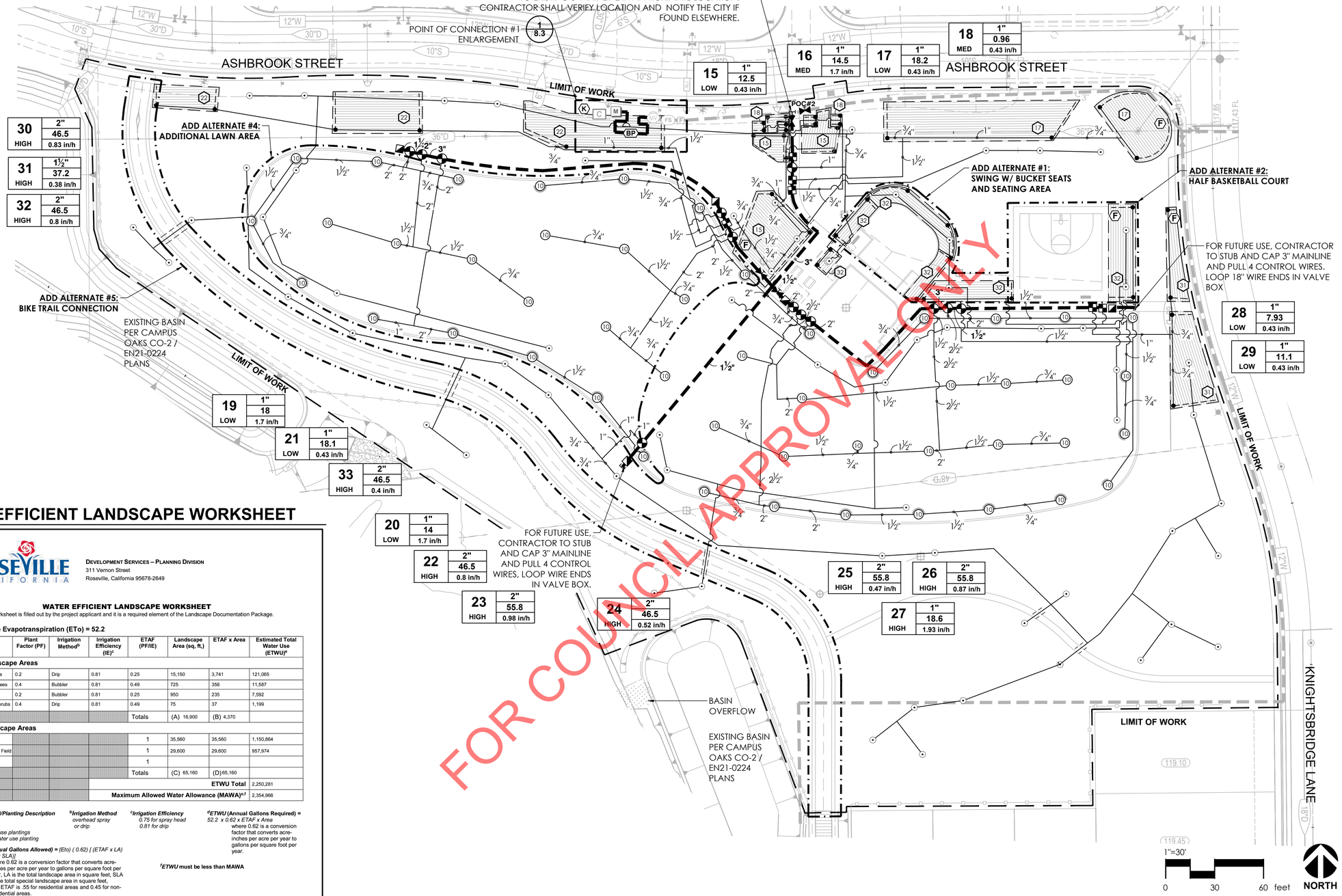

FOR COUNCIL APPROVAL ONLY

WATER EFFICIENT LANDSCAPE WORKSHEET

CITY OF ROSEVILLE CALIFORNIA

DEVELOPMENT SERVICES – PLANNING DIVISION
311 Vernon Street
Roseville, California 95678-2649

WATER EFFICIENT LANDSCAPE WORKSHEET

This worksheet is filled out by the project applicant and it is a required element of the Landscape Documentation Package.

Reference Evapotranspiration (ETo) = 52.2

Hydrozone # /Planting Description[a]	Plant Factor (PF)	Irrigation Method[b]	Irrigation Efficiency (IE)[c]	ETAF (PF/IE)	Landscape Area (sq. ft.)	ETAF x Area	Estimated Total Water Use (ETWU)[d]
Regular Landscape Areas							
Low Water Use Shrubs	0.2	Drip	0.81	0.25	15,150	3,741	121,065
Medium Water Use Trees	0.4	Bubbler	0.81	0.49	725	358	11,587
Low Water Use Trees	0.2	Bubbler	0.81	0.25	950	235	7,592
Medium Water Use Shrubs	0.4	Drip	0.81	0.49	75	37	1,199
				Totals	(A) 16,900	(B) 4,370	
Special Landscape Areas							
Turf Field				1	35,560	35,560	1,150,864
Add Alternate #4: Turf Field				1	29,600	29,600	957,974
				1			
				Totals	(C) 65,160	(D)65,160	
						ETWU Total	2,250,281
						Maximum Allowed Water Allowance (MAWA)[e,f]	2,354,966

[a] ***Hydrozone #/Planting Description*** *E.g 1.) front lawn 2.) low water use plantings 3.) medium water use planting*

[b] ***Irrigation Method*** *overhead spray or drip*

[c] ***Irrigation Efficiency*** *0.75 for spray head 0.81 for drip*

[d] ***ETWU* (Annual Gallons Required) =** *52.2 x 0.62 x ETAF x Area* where 0.62 is a conversion factor that converts acre-inches per acre per year to gallons per square foot per year.

[e] ***MAWA (Annual Gallons Allowed) =*** *(Eto) (0.62) [(ETAF x LA) + ((1-ETAF) x SLA)]* where 0.62 is a conversion factor that converts acre-inches per acre per year to gallons per square foot per year, LA is the total landscape area in square feet, SLA is the total special landscape area in square feet, and ETAF is .55 for residential areas and 0.45 for non-residential areas.

[f] ***ETWU* must be less than MAWA**

ETAF Calculations

Regular Landscape Areas

Total ETAF x Area	(B)
Total Area	(A)
Average ETAF	**B ÷ A**

Average ETAF for Regular Landscape Areas must be 0.55 or below for residential areas, and 0.45 or below for non-residential areas.

All Landscape Areas

Total ETAF x Area	(B+D)
Total Area	(A+C)
Sitewide ETAF	**(B+D) ÷ (A+C)**

FOR IRRIGATION NOTES REFER TO SHEET L6.1

Know what's below. Call before you dig.

CALA
12150 Tributary Point Drive, Suite 140
Gold River, CA 95670
T 916.985.4366
www.callanderassociates.com

REVISION	DATE

LANDSCAPE ARCHITECT — Signature — May 31, 2027 Renewal Date — Date — STATE OF CALIFORNIA

CO-61 PARK
5125 ASHBROOK ST, ROSEVILLE, CA 95747

SUBMITTAL	DATE
30% Submittal	09/30/25
99% Submittal	11/18/25
100% Submittal	02/09/26

PROJECT NO: 25034
DRAWN BY: CM/DS
CHECKED BY: BW
SCALE: As Shown

SHEET TITLE
IRRIGATION PLAN- ADD ALTERNATES

SHEET
6.1
12 OF 28

File Path: I:\Projects\2025\25034_CO61Park\3_ConstructionDocuments\25034_IR_A1.0.dwg Plot Date: 2/9/26 Saved By: Cmo
Copyright © 2021 Callander Associates Landscape Architecture, Inc.

CITY OF ROSEVILLE RECYCLED WATER IRRIGATION NOTES

1. THE INSTALLATION OF THE RECYCLED WATER SYSTEM SHALL CONFORM TO THE REGULATIONS FOR THE CONSTRUCTION OF RECYCLED WATER SYSTEMS WITHIN THE CITY OF ROSEVILLE AND THE ACCOMPANYING PLANS AND SPECIFICATIONS.

2. ALL ON-SITE RECYCLED AND POTABLE WATER PIPING INSTALLED ON THIS PROJECT SHALL BE IDENTIFIED IN ACCORDANCE WITH THE CITY OF ROSEVILLE CONSTRUCTION STANDARDS FOR RECYCLED WATER INFRASTRUCTURE AND THE IRRIGATION SPECIFICATIONS.

3. CITY OF ROSEVILLE ENVIRONMENTAL UTILITIES DEPARTMENT SHALL BE NOTIFIED TWO DAYS PRIOR TO THE START OF CONSTRUCTION AT (916) 774-5750 AND EACH WORKDAY THEREAFTER UNTIL COMPLETION OF PROJECT FOR COMMERCIAL IRRIGATION SYSTEMS. CITY OF ROSEVILLE PARKS DEPARTMENT SHALL BE NOTIFIED TWO DAYS PRIOR TO THE START OF CONSTRUCTION AT (916) 746-1758 FOR LANDSCAPE CORRIDORS AND PARKS. A RECONSTRUCTION MATERIALS INSPECTION MUST BE ARRANGED PRIOR TO THE START OF CONSTRUCTION.

4. NO FACILITY IS TO BE BACKFILLED UNTIL INSPECTED BY THE CITY OF ROSEVILLE ENVIRONMENTAL UTILITIES DEPARTMENT AND/OR PARKS DEPARTMENT INSPECTOR.

5. ALL RECYCLED WATER INFRASTRUCTURE, BOTH ON-SITE AND OFF-SITE SHALL BE INSPECTED BY CITY OF ROSEVILLE ENVIRONMENTAL UTILITIES AND/OR PARKS DEPARTMENT. FOR INSPECTION OF RECYCLED WATER SYSTEM CONTACT ENVIRONMENTAL UTILITIES AT 774-5750 FORTY-EIGHT (48) HOURS IN ADVANCE. POINTS OF INSPECTION ARE:
   - 5.1. PRE-CONSTRUCTION MATERIALS INSPECTION.
   - 5.2. IRRIGATION SYSTEM INSTALLATION BEFORE LINES ARE COVERED.
   - 5.3. PRESSURE TESTING.
   - 5.4. SYSTEM CROSS CONNECTION CONTROL TEST.
   - 5.5. SYSTEM COVERAGE TEST.

6. ALL RECYCLED WATER PIPING SHALL BE PURPLE COLORED PVC UNLESS OTHERWISE SPECIFIED. WHERE PURPLE PVC IS NOT USED, PIPE SHALL BE IDENTIFIED (MARKED) IN ACCORDANCE WITH THE CITY OF ROSEVILLE CONSTRUCTION STANDARDS.

7. MARKING ON THE PURPLE COLORED PVC PIPE SHALL INCLUDE THE FOLLOWING: "CAUTION: RECYCLED WATER- DO NOT DRINK". NOMINAL PIPE SIZE. PVC - 1120. PRESSURE RATING IN POUNDS PER SQUARE INCH AT 73 DEGREES. ASTM DESIGNATIONS SUCH AS 1785, 2241, 1672, 3139. PRINTING SHALL BE PLACED CONTINUOUSLY ON TWO SIDES OF THE PIPE.

8. ALL RECYCLED WATER SPRINKLER CONTROL VALVES, VALVE RISERS, SPRINKLER RISERS, AND SWING JOINTS SHALL BE TAGGED WITH IDENTIFICATION TAGS OR ADHESIVE LABELS.
   - 8.1. TAGS SHALL BE WEATHERPROOF PLASTIC, 3" X 4", PURPLE COLOR WITH THE WORDS "WARNING: RECYCLED WATER- DO NOT DRINK" IMPRINTED ON ONE SIDE, AND "AVISA: AGUA IMPURA- NO TOMAR" ON THE OTHER SIDE. IMPRINTING SHALL BE PERMANENT AND BLACK IN COLOR. USE TAGS AS MANUFACTURED BY T. CHRISTY ENTERPRISES OR APPROVED EQUAL.
   - 8.2. ONE TAG SHALL BE ATTACHED TO EACH VALVE AS FOLLOWS: ATTACH TO VALVE STEM DIRECTLY OR WITH PLASTIC TIE-WRAP, OR ATTACH TO SOLENOID WIRE DIRECTLY OR WITH PLASTIC TIE-WRAP.
   - 8.3. RECYCLED WATER WARNING LABELS OR STICKERS THAT ARE CONSISTENT WITH CITY OF ROSEVILLE CONSTRUCTION STANDARDS FOR RECYCLED WATER INFRASTRUCTURE AND THE IRRIGATION SPECIFICATIONS MUST BE ATTACHED TO ALL PIPING NOT IN COMPLIANCE.
   - 8.4. ALL SPRINKLER HEADS MUST BE DESIGNED FOR RECYCLED WATER USAGE, WITH PURPLE RECYCLED WATER WARNING CAPS.
   - 8.5. SPRINKLER RISERS AND SWING JOINTS SHALL BE IDENTIFIED WITH PURPLE ADHESIVE 3" X 3" LABELS. EACH LABEL SHALL STATE "RECYCLED WATER - DO NOT DRINK" IN ENGLISH AND SPANISH.

9. ALL RECYCLED WATER CONTROL VALVE BOXES SHALL BE PURPLE AND HAVE A WARNING LABEL PERMANENTLY MOLDED INTO OR AFFIXED ONTO THE LID WITH RIVETS, BOLTS, ETC. WARNING LABELS SHALL BE CONSTRUCTED OF A PURPLE WEATHERPROOF MATERIAL WITH THE WARNING PERMANENTLY STAMPED OR MOLDED INTO THE LABEL. THE WARNING SHALL CONTAIN THE FOLLOWING INFORMATION:
   - 9.1. "NON-POTABLE" OR "RECYCLED WATER"
   - 9.2. "DO NOT DRINK" IN ENGLISH AND SPANISH

10. RECYCLED WATER QUICK COUPLING VALVES SHALL HAVE A PURPLE RUBBER OR VINYL COVER. THE COVER SHALL BE OF A LOCKING TYPE AND HAVE A WARNING PERMANENTLY STAMPED OR MOLDED AS FOLLOWS: "RECYCLED WATER- DO NOT DRINK" IN ENGLISH AND SPANISH.

11. PLASTIC WARNING TAPE SHALL BE USED ON ALL POTABLE WATER PIPING, POTABLE WATER WARNING TAPE SHALL BE A MINIMUM OF 3 INCHES WIDE AND SHALL RUN CONTINUOUSLY FOR THE ENTIRE LENGTH OF EACH LINE. THE TAPE SHALL BE ATTACHED TO THE TOP OF THE PIPE WITH NYLON TIE-WRAP BANDED AROUND THE WARNING TAPE AND THE PIPE EVERY FIVE FEET ON CENTER. WARNING TAPE FOR THE POTABLE WATER PIPING SHALL BE BLUE IN COLOR WITH WORDS "CAUTION: POTABLE WATER LINE BURIED BELOW" IMPRINTED IN MINIMUM1-INCH HIGH LETTERS, BLACK IN COLOR. IMPRINTING SHALL BE CONTINUOUS AND PERMANENT.

12. ALL PRESSURE MAIN LINE PIPING FROM THE RECYCLED WATER SYSTEM SHALL BE INSTALLED TO MAINTAIN 10 FEET MINIMUM HORIZONTAL SEPARATION FROM ALL POTABLE WATER PIPING. WHERE RECYCLED AND POTABLE WATER PRESSURE MAIN LINE PIPING CROSS, THE RECYCLED WATER PIPING SHALL BE INSTALLED 12" BELOW THE POTABLE WATER PIPING OD TO OD. WHERE THE RECYCLED WATER PRESSURE MAIN LINE MUST PASS ABOVE POTABLE WATER PIPING, THE RECYCLED WATER PIPING SHALL INSTALLED IN A CLASS 200 PURPLE COLORED PVC SLEEVE WHICH EXTENDS A MINIMUM OF FIVE FEET ON EITHER SIDE OF THE POTABLE WATER PIPING. A 12" VERTICAL SEPARATION OD TO OD MUST BE MAINTAINED. CONVENTIONAL (WHITE) PVC PIPE MAY BE USED FOR SLEEVING MATERIAL IF IT IS TAPED WITH THREE-INCH WIDE PURPLE WARNING TAPE, WHICH READS "RECYCLED WATER- DO NOT DRINK"

13. ALL PRESSURE MAIN LINE PIPING FROM THE RECYCLED WATER SYSTEM SHALL BE INSTALLED TO MAINTAIN A TEN FOOT MINIMUM HORIZONTAL SEPARATION FROM ALL SANITARY SEWER LINES. WHERE RECYCLED AND SEWER CROSS, THE RECYCLED WATER PIPING SHALL BE INSTALLED A MINIMUM OF ONE FOOT ABOVE SEWER.

14. FOR ON-SITE RECLAIMED WATER PIPING, THE MINIMUM DEPTH FROM FINISH GRADE TO TOP OF PIPE SHALL BE AS FOLLOWS:
   - 14.1. INTERMITTENT PRESSURE LINES (ALL SIZES).....12"
   - 14.2. CONSTANT PRESSURE LINES 2.5" AND SMALLER .....18"
   - 14.3. CONSTANT PRESSURE LINES 3" AND LARGER .....24"

15. PRESSURE AND CROSS CONNECTION TESTING FOR ON-SITE RECYCLED WATER SYSTEM.
   - 15.1. ALL TESTING OF RECYCLED WATER SYSTEMS MUST BE PERFORMED UTILIZING A POTABLE WATER SOURCE VIA A CONSTRUCTION WATER CONNECTION PER CITY OF ROSEVILLE CONSTRUCTION STANDARDS. NO RECYCLED WATER MAY ENTER A RECYCLED WATER SYSTEM UNTIL ALL TESTING IS SUCCESSFULLY COMPLETED.
   - 15.2. THE SOURCE OF POTABLE WATER USED FOR TESTING MUST HAVE A METER AND AN APPROVED BACK FLOW PREVENTION DEVICE. THESE CAN BE OBTAINED THROUGH THE CITY OF ROSEVILLE
   - 15.3. THE CONTRACTOR SHALL PROVIDE A MEANS TO PLUMB IN PRESSURE AND CROSS CONNECTION TESTING APPARATUS AT THE POINT OF HIGHEST ELEVATION, FOR BOTH POTABLE AND CONSTANT PRESSURE RECYCLED WATER SYSTEMS.
   - 15.4. THE CONSTANT PRESSURE RECYCLED WATER SYSTEM INCLUDING ALL APPURTENANCES SHALL BE TESTED AT 125 PSI AT HIGHEST POINT OF ELEVATION FOR 1 HOUR WITH NO DETECTABLE LEAKAGE.
   - 15.5. PRESSURE TESTING MUST BE SUCCESSFULLY COMPLETED PRIOR TO CROSS CONNECTION TESTING.
   - 15.6. THE RECYCLED WATER SYSTEM SHALL BE TESTED FOR CROSS-CONNECTION IN ACCORDANCE WITH UNIFORM PLUMBING CODE APPENDIX J PRIOR TO USE.
   - 15.7. FOR PROJECTS BEING PERFORMED IN PHASES, A CROSS CONNECTION TEST SHALL BE PERFORMED ON EACH PHASE INDEPENDENTLY, BEFORE IT IS PUT INTO SERVICE. THE POTABLE WATER SOURCE USED FOR TESTING EACH PHASE MUST BE INDEPENDENT OF OTHER PREVIOUSLY COMPLETED PHASES.
   - 15.8. AT THE TIME A CROSS CONNECTION TEST IS TO BE PERFORMED, CONSTRUCTION ON BOTH THE POTABLE AND THE RECYCLED WATER SYSTEMS BEING TESTED MUST BE COMPLETE, AND BOTH SYSTEMS FULLY OPERATIONAL AND FUNCTIONING AS DESIGNED.
   - 15.9. CROSS CONNECTION TESTING SHALL BE PERFORMED ON THE SYSTEM BY CITY FORCES WITH THE ASSISTANCE OF THE CONTRACTOR. THE TEST WILL BE COORDINATED THROUGH THE ENVIRONMENTAL UTILITIES OR PARKS DEPARTMENT INSPECTOR. FORTY-EIGHT (48) HOURS NOTICE IS REQUIRED BEFORE THE TEST. DEPENDING ON THE COMPLEXITY OF THE SITE, A PRELIMINARY FIELD MEET MAY ALSO BE REQUIRED.

16. COVERAGE TEST: ADJUST SPRAY HEADS TO ELIMINATE OVERSPRAY ONTO NATIVE OAK AREAS AND INTO AREAS NOT UNDER THE CONTROL OF THE CUSTOMER. FOR EXAMPLE: POOL DECKS, PRIVATE PATIOS, STREETS AND SIDEWALKS.

17. METER INSTALLATION: ONCE THE ON-SITE RECYCLED WATER SYSTEM HAS BEEN PROPERLY INSPECTED AND PASSED PRESSURE AND CROSS CONNECTION TESTING, A METER MAY BE INSTALLED. THE METER MUST BE PURCHASED FROM THE CITY OF ROSEVILLE AND INSTALLED BY CITY FORCES. COORDINATE METER PURCHASE AND INSTALLATION WITH THE ENVIRONMENTAL UTILITIES OR PARKS DEPARTMENT INSPECTOR.

18. NO CONNECTION SHALL BE MADE TO THE CITY'S EXISTING RECYCLED WATER SYSTEM UNTIL THE NEW FACILITIES HAVE BEEN SUCCESSFULLY PRESSURE AND CROSS CONNECTION TESTED. TAPS TO THE EXISTING RECYCLED SYSTEM WILL BE MADE BY CITY FORCES ONLY.

19. FAILURE TO COMPLY WITH ANY OR ALL OF THE ABOVE GUIDELINES VIOLATES THE CITY OF ROSEVILLE DESIGN AND CONSTRUCTION STANDARDS FOR RECYCLED WATER INFRASTRUCTURE AND WILL RESULT IN TERMINATION OF SERVICE UNTIL THE APPROPRIATE CORRECTIVE STEPS HAVE BEEN TAKEN.

20. OVERHEAD IRRIGATION SHALL NOT BE PERMITTED WITHIN 24 INCHES OF ANY NON-PERMEABLE SURFACE. ALLOWABLE IRRIGATION WITHIN THE SETBACK FROM NON-PERMEABLE SURFACES MAY INCLUDE DRIP, DRIPLINE, OR OTHER LOW VOLUME TECHNOLOGY.

IRRIGATION NOTES

1. SPECIFICATIONS: SEE IRRIGATION SPECIFICATIONS FOR ADDITIONAL INFORMATION.

2. VERIFICATION: SYSTEM DESIGN IS BASED ON (57) P.S.I. AND (120) G.P.M. AVAILABLE AT DISCHARGE OUTLET OF METER OR OTHER POINT OF CONNECTION. CONTRACTOR SHALL VERIFY SAME AND NOTIFY LANDSCAPE ARCHITECT IF SUCH DATA ADVERSELY AFFECTS THE OPERATION OF THE SYSTEM. SUCH NOTICE SHALL BE MADE IN WRITING AND PRIOR TO COMMENCING ANY IRRIGATION WORK.

3. UTILITIES: CONTRACTOR SHALL VERIFY LOCATION OF ALL ON-SITE UTILITIES. RESTORATION OF DAMAGED UTILITIES SHALL BE MADE AT THE CONTRACTOR'S EXPENSE TO THE SATISFACTION OF THE OWNER.

4. SCHEMATIC: SYSTEM FEATURES ARE SHOWN SCHEMATICALLY FOR GRAPHIC CLARITY. INSTALL ALL PIPING AND VALVES IN COMMON TRENCHES WHERE FEASIBLE AND INSIDE PLANTING AREAS WHENEVER POSSIBLE. ALL VALVES SHALL BE LOCATED IN GROUNDCOVER OR SHRUB AREAS WHENEVER POSSIBLE.

5. CODES: IRRIGATION SYSTEM SHALL BE INSTALLED IN ACCORDANCE WITH ALL LOCAL CODES AND MANUFACTURER'S SPECIFICATIONS. NOTIFY LANDSCAPE ARCHITECT BY TELEPHONE AND IN WRITING OF ANY CONFLICTS PRIOR TO INSTALLATION.

6. SLEEVING: CONTRACTOR SHALL SIZE ALL SLEEVES TO BE A MINIMUM TWO TIMES THE SIZE OF THE INTERIOR PIPE. SLEEVES SHALL BE INSTALLED AT THE NECESSARY DEPTHS PRIOR TO PAVEMENT CONSTRUCTION. SLEEVING SHALL EXTEND 1'-0" FROM EDGE OF PAVEMENT INTO LAWN OR PLANTING AREA, AND SHALL HAVE ENDS CLEARLY MARKED ABOVE GRADE.

7. QUICK COUPLING VALVES: INSTALL ON TRIPLE SWING JOINT. LOCATE 12" AWAY FROM EDGE OF WALKS, WALLS, CURBS, AND HEADERBOARDS WITHIN PLANTING AREAS. PROVIDE OWNER WITH ONE OPERATING KEY, TWO SETS OF LOCKING COVER KEYS, AND ONE SWIVEL HOSE ELL.

8. HEAD ALLOWANCE: CONTRACTOR SHALL ALLOW IN BID PRICE AN AMOUNT SUFFICIENT TO PROVIDE AND INSTALL AN ADDITIONAL (10%) OF DRIPLINE AND SPRINKLER HEADS OF EACH TYPE SPECIFIED ON PLAN TO ACCOMMODATE FIELD CHANGES. THESE HEADS SHALL BE LOCATED AS DIRECTED BY THE LANDSCAPE ARCHITECT. CONTRACTOR SHALL DELIVER TO THE OWNER ANY UN-USED ADDITIONAL HEADS AND DRIPLINE AT THE END OF THE MAINTENANCE PERIOD.

9. CONTROLLER: ALL ABOVE-GRADE CONDUIT EITHER 24V. OR 110V. SHALL BE RIGID STEEL AND SECURELY FASTENED TO STRUCTURE AND TO CONTROLLER.

10. CHECK VALVES: INSTALL PLASTIC CHECK VALVE AT BASE OF HEADS ON LOW ENDS OF SYSTEMS AS REQUIRED TO MINIMIZE LINE DRAINAGE. CONTRACTOR SHALL ALLOW IN BID PRICE AN AMOUNT SUFFICIENT TO PROVIDE AND INSTALL AN ADDITIONAL (5) CHECK VALVES TO ACCOMMODATE ANY NECESSARY FIELD CHANGES.

11. MAINTAINING EXISTING IRRIGATION: SHOULD THE EXISTING MAINLINE BREAK OR BE SHUT OFF FOR ANY REASON DURING THE COURSE OF CONSTRUCTION THE CONTRACTOR SHALL HAND WATER ALL TREES, SHRUBS, TURF, AND GROUNDCOVER THAT THE EXISTING IRRIGATION SYSTEM WATERS. THE CONTRACTOR SHALL CONTINUE TO DO SO UNTIL THE IRRIGATION SYSTEM IS OPERABLE.

12. EACH VALVE SHALL BE SEPARATELY TEED/SADDLE TAPPED OFF THE IRRIGATION MAINLINE, PER THE CITY OR ROSEVILLE STANDARDS.

I AGREE TO COMPLY WITH THE CRITERIA OF THE WATER EFFICIENT LANDSCAPE ORDINANCE AND SUBMIT A COMPLETE LANDSCAPE DOCUMENTATION PACKAGE

MELISSA RUTH
SIGNATURE

PROJECT INFORMATION

A. DATE: SEE TITLE BLOCK

B. PROJECT APPLICANT: CITY OF ROSEVILLE

C. PROJECT ADDRESS: ASHBROOK ST, ROSEVILLE, CA 95747

D. TOTAL LANDSCAPE AREA: SEE WATER EFFICIENT LANDSCAPE WORKSHEET

E. PROJECT TYPE: PUBLIC PARK

F. WATER SUPPLY TYPE: RECYCLED

G. LANDSCAPE DOCUMENTATION PACKAGE CHECKLIST:

1. ✓ PROJECT INFORMATION
2. ✓ WATER EFFICIENT LANDSCAPE WORKSHEET
3. ___ *SOIL MANAGEMENT REPORT
4. ✓ LANDSCAPE DESIGN PLAN (SEE SHEET 5.0-5.1)
5. ✓ IRRIGATION DESIGN PLAN (SEE SHEET 6.0-6.2)
6. ✓ GRADING DESIGN (SEE SHEET 3.0)
7. ___ #CERTIFICATE OF COMPLETION
8. ___ *CERTIFICATE OF INSTALLATION
9. ✓ IRRIGATION SCHEDULE
10. ___ *MAINTENANCE SCHEDULE
11. ___ +*LANDSCAPE IRRIGATION AUDIT

*CONTRACTOR SHALL FURNISH UPON PROJECT COMPLETION.

#OWNER/OWNER'S REPRESENTATIVE SHALL FURNISH UPON PROJECT COMPLETION.

+CONTRACTOR IS RESPONSIBLE FOR COORDINATION OF IRRIGATION AUDIT BY THE LOCAL AGENCY, OR A THIRD PARTY CERTIFIED LANDSCAPE IRRIGATION AUDITOR. LANDSCAPE AUDITS SHALL NOT BE CONDUCTED BY THE PERSON WHO DESIGNED THE LANDSCAPE OR INSTALLED THE LANDSCAPE. CONTRACTOR IS RESPONSIBLE TO PAY FOR ALL ASSOCIATED FEES.

H. PROJECT CONTACTS:

OWNER:
CITY OF ROSEVILLE
316 VERNON STREET, SUITE 400
ROSEVILLE, CA 95678
PHONE: (916) 774-5253

LANDSCAPE ARCHITECT:
MELISSA RUTH
12150 TRIBUTARY POINT
DRIVE, SUITE 140
GOLD RIVER, CA 95670
PHONE: (916) 985-4366

APPROVED BY COUNCIL
FOR COUNCIL

IRRIGATION SCHEDULE

VALVE	GPM	PLANT TYPE	WATER USE	IRRIGATION METHOD	WATERING DAYS/WEEK	MAX RUN TIME CYCLE (min)	Jan	Feb	Mar	Apr	May	Jun	Jul	Aug	Sep	Oct	Nov	Dec	Jan	Feb	Mar	Apr	May	Jun	Jul	Aug	Sep	Oct	Nov	Dec	MAWA	ETWU
							1.1	1.7	3.1	4.7	6.2	7.7	8.5	7.3	5.6	3.7	1.7	1	1.1	1.7	3.1	4.7	6.2	7.7	8.5	7.3	5.6	3.7	1.7	1		
							RUN TIME MINUTES/DAY												RUN TIME MINUTES/DAY													
15	12.5	Shrubs	Low	Drip	3	20	6	9	12	15	18	21	21	21	15	12	9	6	6	9	12	15	18	21	21	21	15	12	9	6	24,750	23,850
16	15	Trees	Medium	Bubbler	3	5	5	5	10	10	10	10	10	10	10	10	5	5	5	5	10	10	10	10	10	10	10	10	5	5	18,000	17,100
17	18.2	Shrubs	Low	Drip	3	20	6	9	12	15	18	21	21	21	15	12	9	6	0	0	12	15	18	21	21	21	15	12	0	0	36,036	34,726
18	0.96	Shrubs	Medium	Drip	3	20	12	15	21	30	36	39	42	39	30	24	15	12	12	15	21	30	36	39	42	39	30	24	15	12	3,629	3,456
19	4	Trees	Low	Bubbler	3	5	3	3	3	6	6	6	6	6	6	3	3	3	0	0	3	6	6	6	6	6	3	0	0	0	2,592	2,592
20	18.1	Shrubs	Low	Drip	5	20	10	10	15	15	20	20	20	20	15	15	10	10	10	10	15	15	20	20	20	20	15	15	10	10	39,096	38,010
21	14	Trees	Low	Bubbler	5	8	3	3	6	6	9	9	9	9	6	6	3	3	3	3	6	6	9	9	9	9	6	6	3	3	12,096	12,096
22	46.5	Turf	High	Spray	5	8	10	10	20	25	30	30	30	30	25	20	15	10	10	10	20	25	30	30	30	30	25	20	15	10	142,290	136,710
23	55.8	Turf	High	Spray	5	9	10	15	20	25	30	35	35	35	25	20	15	10	10	15	20	25	30	35	35	35	25	20	15	10	184,140	177,444
24	46.5	Turf	High	Spray	5	17	20	25	35	50	55	60	65	60	50	35	25	20	20	25	35	50	55	60	65	60	50	35	25	20	279,000	259,470
25	55.8	Turf	High	Spray	5	18	21	24	36	51	57	66	69	66	51	39	27	21	0	0	36	51	57	66	69	66	51	39	0	0	353,549	325,426
26	55.8	Turf	High	Spray	3	8	9	12	18	24	27	30	33	30	24	18	12	9	9	12	18	24	27	30	33	30	24	18	12	9	164,722	162,713
27	18.6	Turf	High	Spray	3	4	5	10	10	15	15	20	20	20	15	10	10	5	5	10	10	15	15	20	20	20	15	10	10	5	34,596	33,480
28	7.93	Shrubs	Low	Drip	5	20	6	9	12	15	18	21	21	21	15	12	9	6	6	9	12	15	18	21	21	21	15	12	9	6	15,701	15,130
29	11.1	Shrubs	Low	Drip	5	20	6	9	12	15	18	21	21	21	15	12	9	6	0	0	12	15	18	21	21	21	15	12	0	0	21,978	21,179
30	46.5	Turf	High	Spray	5	10	15	15	20	30	35	40	40	40	30	25	15	15	0	0	20	30	35	40	40	40	30	25	0	0	178,560	167,400
31	37.2	Turf	High	Spray	5	23	24	29	48	62	76	86	86	81	62	52	33	24	25	32	46	63	74	84	84	81	63	49	32	25	294,736	279,893
32	46.5	Turf	High	Spray	3	11	14	14	24	33	38	43	43	38	33	24	19	14	14	14	21	32	35	39	42	39	32	25	18	14	188,186	172,283
33	46.5	Turf	High	Spray	3	22	23.75	28.5	42.75	61.75	71.25	80.75	80.75	76	61.75	47.5	33.25	23.75	24.5	28	42	59.5	70	77	80.5	77	59.5	45.5	31.5	24.5	352,517	331,313
																															2,346,172	2,214,269

NOTE:
1. WATERING WINDOW: THIS IRRIGATION SCHEDULE IS BASED ON A 9 HOUR WATERING WINDOW WITH 5 DAYS OF OPERATION PER WEEK.
2. VALVE OPERATION: THIS SCHEDULE IS NOT A "STAKING" SCHEDULE, AND DOES NOT OUTLINE WHICH VALVES SHOULD RUN AT THE SAME TIME. ALL PROGRAMMING AND STACKING SHALL BE WITHIN THE LIMITS OF THE AVAILABLE WATER PRESSURE.
3. SCHEDULE ADJUSTMENTS: DUE TO VARIABLE AND UNFORESEEN SITE CONDITIONS, THE IRRIGATION SYSTEM RUN TIMES MAY NEED TO BE ADJUSTED TO ENSURE THAT PROPER MOISTURE IS MAINTAINED IN THE LANDSCAPE.
4. IRRIGATION RUN TIMES ARE SHOWN APPROXIMATELY AND ARE DEPENDENT ON SOIL INFILTRATION RATE AND WEATHER.

811 Know what's below. Call before you dig.

CALA
12150 Tributary Point Drive, Suite 140
Gold River, CA 95670
T 916.985.4366
www.callanderassociates.com

REVISION	DATE

LICENSED LANDSCAPE ARCHITECT
MELISSA RUTH RE
Signature
May 31, 2027
Renewal Date
Date
STATE OF CALIFORNIA

CO-61 PARK
5125 ASHBROOK ST,
ROSEVILLE, CA 95747

SUBMITTAL	DATE
30% Submittal	09/30/25
99% Submittal	11/18/25
100% Submittal	02/09/26

PROJECT NO:	25034
DRAWN BY:	CM/DS
CHECKED BY:	BW
SCALE:	As Shown

SHEET TITLE
IRRIGATION NOTES

SHEET
6.2
13 OF 28

File Path: T:\Projects\2025\25034_CO61Park\3_Construction\Documents\25034_IR_ALT.dwg Plot Date: 2/10/26 Saved By: Cma
Copyright © 2025 Callander Associates Landscape Architecture, Inc.

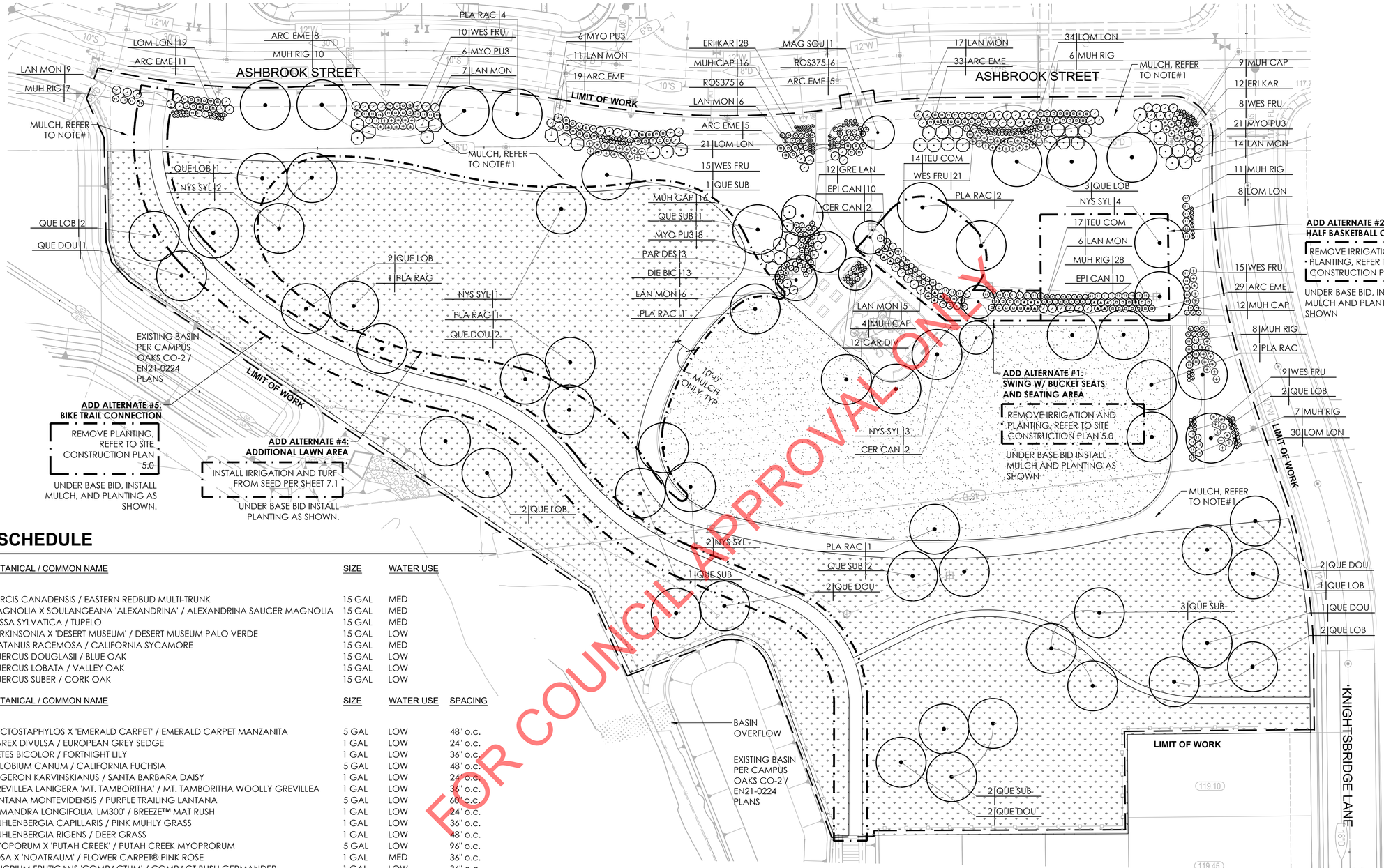

PLANT SCHEDULE

CODE	BOTANICAL / COMMON NAME	SIZE	WATER USE
TREES			
CER CAN	CERCIS CANADENSIS / EASTERN REDBUD MULTI-TRUNK	15 GAL	MED
MAG SOU	MAGNOLIA X SOULANGEANA 'ALEXANDRINA' / ALEXANDRINA SAUCER MAGNOLIA	15 GAL	MED
NYS SYL	NYSSA SYLVATICA / TUPELO	15 GAL	MED
PAR DES	PARKINSONIA X 'DESERT MUSEUM' / DESERT MUSEUM PALO VERDE	15 GAL	LOW
PLA RAC	PLATANUS RACEMOSA / CALIFORNIA SYCAMORE	15 GAL	MED
QUE DOU	QUERCUS DOUGLASII / BLUE OAK	15 GAL	LOW
QUE LOB	QUERCUS LOBATA / VALLEY OAK	15 GAL	LOW
QUE SUB	QUERCUS SUBER / CORK OAK	15 GAL	LOW

CODE	BOTANICAL / COMMON NAME	SIZE	WATER USE	SPACING
SHRUBS				
ARC EME	ARCTOSTAPHYLOS X 'EMERALD CARPET' / EMERALD CARPET MANZANITA	5 GAL	LOW	48" o.c.
CAR DIV	CAREX DIVULSA / EUROPEAN GREY SEDGE	1 GAL	LOW	24" o.c.
DIE BIC	DIETES BICOLOR / FORTNIGHT LILY	1 GAL	LOW	36" o.c.
EPI CAN	EPILOBIUM CANUM / CALIFORNIA FUCHSIA	5 GAL	LOW	48" o.c.
ERI KAR	ERIGERON KARVINSKIANUS / SANTA BARBARA DAISY	1 GAL	LOW	24" o.c.
GRE LAN	GREVILLEA LANIGERA 'MT. TAMBORITHA' / MT. TAMBORITHA WOOLLY GREVILLEA	1 GAL	LOW	36" o.c.
LAN MON	LANTANA MONTEVIDENSIS / PURPLE TRAILING LANTANA	5 GAL	LOW	60" o.c.
LOM LON	LOMANDRA LONGIFOLIA 'LM300' / BREEZE™ MAT RUSH	1 GAL	LOW	24" o.c.
MUH CAP	MUHLENBERGIA CAPILLARIS / PINK MUHLY GRASS	1 GAL	LOW	36" o.c.
MUH RIG	MUHLENBERGIA RIGENS / DEER GRASS	1 GAL	LOW	48" o.c.
MYO PU3	MYOPORUM X 'PUTAH CREEK' / PUTAH CREEK MYOPRORUM	5 GAL	LOW	96" o.c.
ROS375	ROSA X 'NOATRAUM' / FLOWER CARPET® PINK ROSE	1 GAL	MED	36" o.c.
TEU COM	TEUCRIUM FRUTICANS 'COMPACTUM' / COMPACT BUSH GERMANDER	1 GAL	LOW	36" o.c.
WES FRU	WESTRINGIA FRUTICOSA 'MORNING LIGHT' / MORNING LIGHT COAST ROSEMARY	5 GAL	LOW	48" o.c.

SYMBOL	BOTANICAL / COMMON NAME	SIZE	WATER USE	SPACING
GROUND COVERS				
	TURF SEED FESCUE BLEND / REFER TO SPECS FOR PARK STANDARDS	SEED	HIGH	

UPLANDS SEED MIX WITH WILDFLOWERS PER CITY OF ROSEVILLE

BROMUS CARINATUS / CALIFORNIA BROME	10.0 LBS/AC
CLARKIA AMOENA / FAREWELL TO SPRING	9.0 LBS/AC
ELYMUS GLAUCUS / BLUE WILDRYE	6.0 LBS/AC
ESCHSCHOLZIA CALIFORNICA / CALIFORNIA POPPY	3.0 LBS/AC
LASTHENIA CALIFORNICA / CALIFORNIA GOLDFIELDS	3.0 LBS/AC
LUPINUS NANUS / SKY LUPINE	3.0 LBS/AC
MELICA CALIFONICA / MELIC	2.0 LBS/AC
NASSELLA CERNUA / NODDING NEEDLEGRASS	0.5 LBS/AC
NASSELLA PULCHRA / PURPLE NEEDLEGRASS	2.0 LBS/AC
NEMOPHILA MENZIESII / BABY BLUE EYES	3.5 LBS/AC
POA SECUNDA / BLUEGRASS	1.5 LBS/AC
VULPIA MICROSTACHYS / SMALL FESCUE	1.5 LBS/AC

PLANTING NOTES

1. MULCH: INSTALL A UNIFORM THREE INCH COVERING OF MULCH IN ALL PLANTING AREAS, PER SPECIFICATIONS.
2. GROUNDCOVER: PROVIDE GROUNDCOVER AT INDICATED ON-CENTER SPACING THROUGHOUT ALL AREAS TO BE PLANTED. GROUNDCOVER SHALL BE PROVIDED UP TO THE WATERING BASIN OF ALL TREES AND SHRUBS.
3. QUANTITIES: THE QUANTITIES SHOWN ON THE LABELS ARE NOT TO BE CONSTRUED AS THE COMPLETE AND ACCURATE LIMITS OF THE CONTRACT. FURNISH AND INSTALL ALL PLANTS SHOWN SCHEMATICALLY ON THE DRAWINGS.
4. TOPSOIL: ALL PLANTING AREAS EXCEPT HYDROSEED AREAS TO RECEIVE A SIX INCH LAYER OF IMPORT TOPSOIL PER SPECIFICATIONS.
5. SOILS TESTING: SEE SPECIFICATIONS FOR TESTING OF TOPSOIL AND AMENDMENTS. CONTRACTOR SHALL ALLOW SUFFICIENT TIME FOR TESTING PRIOR TO CONSTRUCTION.
6. NATIVE HYDROSEED : THE CONTRACTOR IS RESPONSIBLE TO ACHIEVE GERMINATION AND GROWTH CONSISTENT WITH SWPPP REQUIREMENTS.

Know what's below. Call before you dig.

CALA
12150 Tributary Point Drive, Suite 140
Gold River, CA 95670
T 916.985.4366
www.callanderassociates.com

REVISION	DATE

LANDSCAPE ARCHITECT — Signature — May 31, 2027 Renewal Date — Date — STATE OF CALIFORNIA

CO-61 PARK
5125 ASHBROOK ST.
ROSEVILLE, CA 95747

SUBMITTAL	DATE
30% Submittal	09/30/25
99% Submittal	11/18/25
100% Submittal	02/09/26

PROJECT NO: 25034
DRAWN BY: CM/DS
CHECKED BY: BW
SCALE: As Shown

SHEET TITLE
PLANTING PLAN- BASE BID

SHEET
7.0
14 OF 28

File Path: T:\Projects\2025\25034_CO61Park\13_ConstructionDocuments\25034_PL.dwg Plot Date: 2/9/26 Saved By: Cma
Copyright © 2025 Callander Associates Landscape Architecture, Inc.

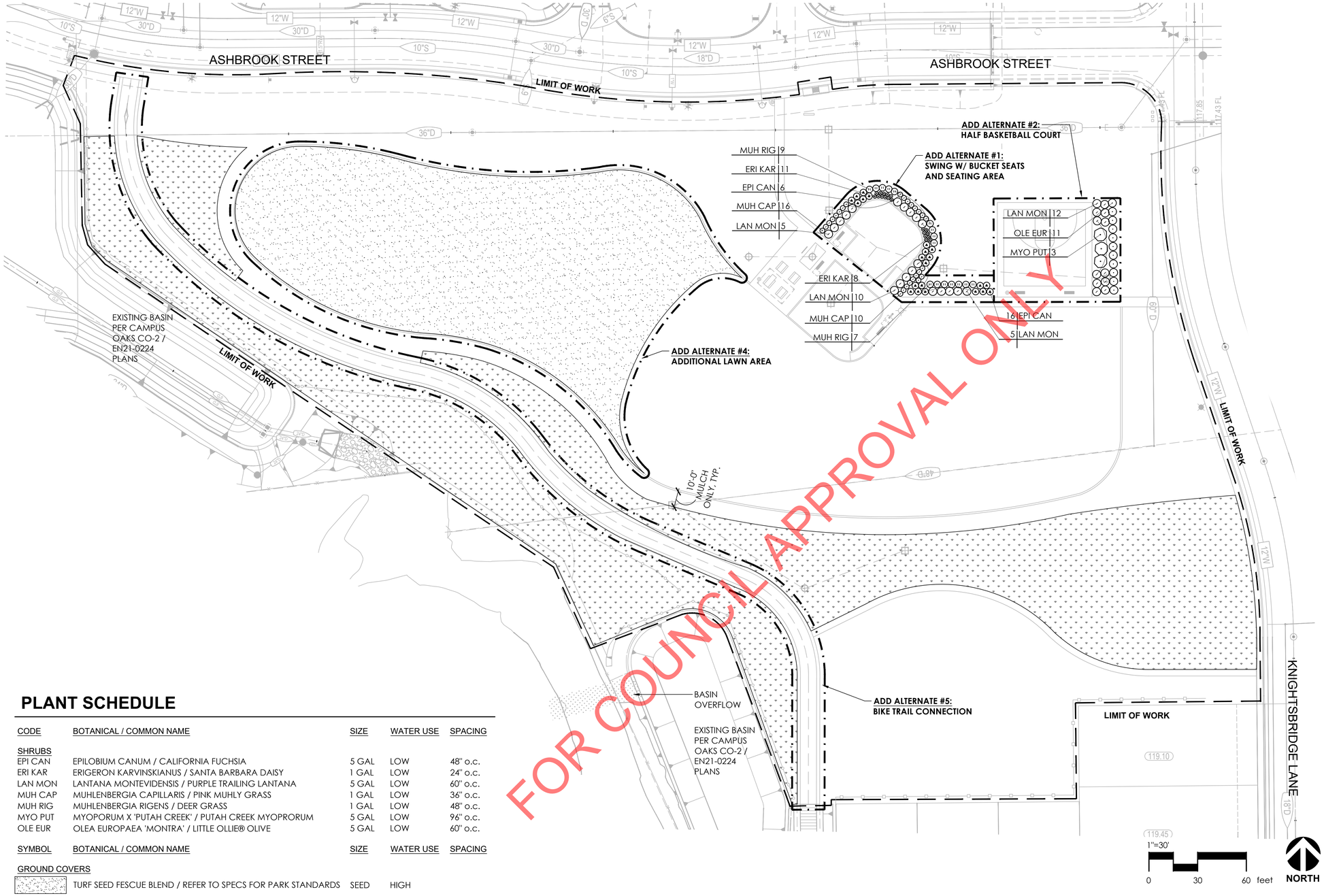

PLANT SCHEDULE

CODE	BOTANICAL / COMMON NAME	SIZE	WATER USE	SPACING
SHRUBS				
EPI CAN	EPILOBIUM CANUM / CALIFORNIA FUCHSIA	5 GAL	LOW	48" o.c.
ERI KAR	ERIGERON KARVINSKIANUS / SANTA BARBARA DAISY	1 GAL	LOW	24" o.c.
LAN MON	LANTANA MONTEVIDENSIS / PURPLE TRAILING LANTANA	5 GAL	LOW	60" o.c.
MUH CAP	MUHLENBERGIA CAPILLARIS / PINK MUHLY GRASS	1 GAL	LOW	36" o.c.
MUH RIG	MUHLENBERGIA RIGENS / DEER GRASS	1 GAL	LOW	48" o.c.
MYO PUT	MYOPORUM X 'PUTAH CREEK' / PUTAH CREEK MYOPRORUM	5 GAL	LOW	96" o.c.
OLE EUR	OLEA EUROPAEA 'MONTRA' / LITTLE OLLIE® OLIVE	5 GAL	LOW	60" o.c.

SYMBOL	BOTANICAL / COMMON NAME	SIZE	WATER USE	SPACING
GROUND COVERS				
	TURF SEED FESCUE BLEND / REFER TO SPECS FOR PARK STANDARDS	SEED	HIGH	

UPLANDS SEED MIX WITH WILDFLOWERS PER CITY OF ROSEVILLE

- BROMUS CARINATUS / CALIFORNIA BROME
- CLARKIA AMOENA / FAREWELL TO SPRING
- ELYMUS GLAUCUS / BLUE WILDRYE
- ESCHSCHOLZIA CALIFORNICA / CALIFORNIA POPPY
- LASTHENIA CALIFORNICA / CALIFORNIA GOLDFIELDS
- LUPINUS NANUS / SKY LUPINE
- MELICA CALIFONICA / MELIC
- NASSELLA CERNUA / NODDING NEEDLEGRASS
- NASSELLA PULCHRA / PURPLE NEEDLEGRASS
- NEMOPHILA MENZIESII / BABY BLUE EYES
- POA SECUNDA / BLUEGRASS
- VULPIA MICROSTACHYS / SMALL FESCUE

CALA
12150 Tributary Point Drive, Suite 140
Gold River, CA 95670
T 916.985.4366
www.callanderassociates.com

REVISION	DATE

LANDSCAPE ARCHITECT — Signature — May 31, 2027 Renewal Date — Date — STATE OF CALIFORNIA

CO-61 PARK

5125 ASHBROOK ST,
ROSEVILLE, CA 95747

SUBMITTAL	DATE
30% Submittal	09/30/25
99% Submittal	11/18/25
100% Submittal	02/09/26

PROJECT NO:	25034
DRAWN BY:	CM/DS
CHECKED BY:	BW
SCALE:	As Shown

SHEET TITLE

PLANTING PLAN-
ADD ALTERNATES

SHEET

7.1

15 OF 28

811 Know what's below. Call before you dig.

File Path: T:\Projects\2025\25034_CO61 Park\3_Construction\Documents\25034_PL_A01.dwg Plot Date: 2/9/26 Saved By: Cma
Copyright © 2026 Callander Associates Landscape Architecture, Inc.

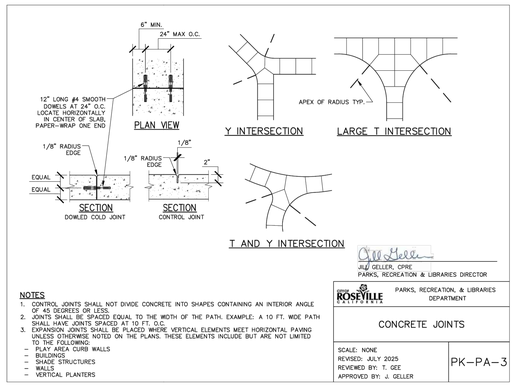

NOTES

1. CONTROL JOINTS SHALL NOT DIVIDE CONCRETE INTO SHAPES CONTAINING AN INTERIOR ANGLE OF 45 DEGREES OR LESS.
2. JOINTS SHALL BE SPACED EQUAL TO THE WIDTH OF THE PATH. EXAMPLE: A 10 FT. WIDE PATH SHALL HAVE JOINTS SPACED AT 10 FT. O.C.
3. CONTROL JOINTS SHALL BE PLACED WHERE VERTICAL ELEMENTS MEET HORIZONTAL PAVING UNLESS OTHERWISE NOTED ON THE PLANS. THESE ELEMENTS INCLUDE BUT ARE NOT LIMITED TO THE FOLLOWING:
   - PLAY AREA CURB WALLS
   - BUILDINGS
   - SHADE STRUCTURES
   - WALLS
   - VERTICAL PLANTERS

JILL GELLER, CPRE
PARKS, RECREATION & LIBRARIES DIRECTOR

CITY OF ROSEVILLE CALIFORNIA — PARKS, RECREATION, & LIBRARIES DEPARTMENT

CONCRETE JOINTS

SCALE: NONE
REVISED: JULY 2025
REVIEWED BY: T. GEE
APPROVED BY: J. GELLER

PK–PA–3

1 8.0 CONCRETE JOINTS

N.T.S. P-25-034-02

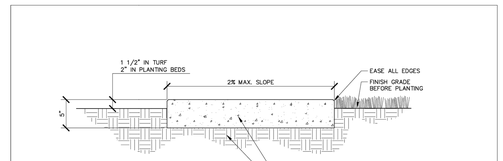

NOTES

1. PROVIDE CONROL JOINTS 2" DEEP AT INTERVALS THE WIDTH OF THE WALK.
2. MEDIUM BROOM FINISH PERPENDICULAR TO PATH OF TRAVEL UNLESS OTHERWISE SPECIFIED.

JILL GELLER, CPRE
PARKS, RECREATION & LIBRARIES DIRECTOR

CITY OF ROSEVILLE CALIFORNIA — PARKS, RECREATION, & LIBRARIES DEPARTMENT

CONCRETE PAVING

SCALE: NONE
REVISED: JULY 2025
REVIEWED BY: T. GEE
APPROVED BY: J. GELLER

PK–PA–2

2 8.0 CONCRETE PAVING

N.T.S. P-25-034-01

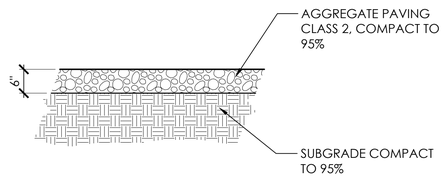

3 8.0 AGGREGATE PAVING

1" = 1'-0" P-25-034-53

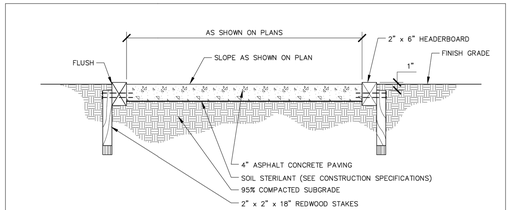

NOTES

1. HEADER BOARD SHALL BE REDWOOD PER PARKS STANDARD PK–MI–3, ROUGH, CONSTRUCTION HEART GRADE, IN ACCORDANCE TO CALIFORNIA REDWOOD ASSOCIATION GRADING RULES.
2. ALL NAILS SHALL BE GALVANIZED 16 PENNY.
3. TYPE A ASPHALT CONCRETE REQUIRED.

JILL GELLER, CPRE
PARKS, RECREATION & LIBRARIES DIRECTOR

CITY OF ROSEVILLE CALIFORNIA — PARKS, RECREATION, & LIBRARIES DEPARTMENT

ASPHALT CONCRETE PAVING

SCALE: NONE
REVISED: JULY 2025
REVIEWED BY: T. GEE
APPROVED BY: J. GELLER

PK–PA–1

4 8.0 ASPHALT CONCRETE PAVING

N.T.S. P-25-034-04

CALA
12150 Tributary Point Drive, Suite 140
Gold River, CA 95670
T 916.985.4366
www.callanderassociates.com

REVISION	DATE

LICENSED LANDSCAPE ARCHITECT — JILL GELLER — No. 5971 — STATE OF CALIFORNIA
Signature
May 31, 2027
Renewal Date
Date

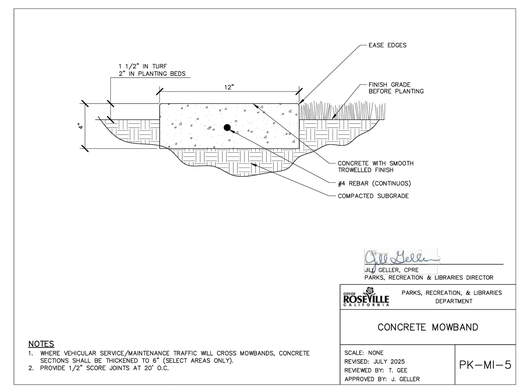

JILL GELLER, CPRE
PARKS, RECREATION & LIBRARIES DIRECTOR

CITY OF ROSEVILLE CALIFORNIA — PARKS, RECREATION, & LIBRARIES DEPARTMENT

CONCRETE MOWBAND

SCALE: NONE
REVISED: JULY 2025
REVIEWED BY: T. GEE
APPROVED BY: J. GELLER

PK–MI–5

NOTES

1. WHERE VEHICULAR SERVICE/MAINTENANCE TRAFFIC WILL CROSS MOWBANDS, CONCRETE SECTIONS SHALL BE THICKENED TO 6" (SELECT AREAS ONLY).
2. PROVIDE 1/2" SCORE JOINTS AT 20' O.C.

5 8.0 CONCRETE MOWBAND

N.T.S. P-25-034-05

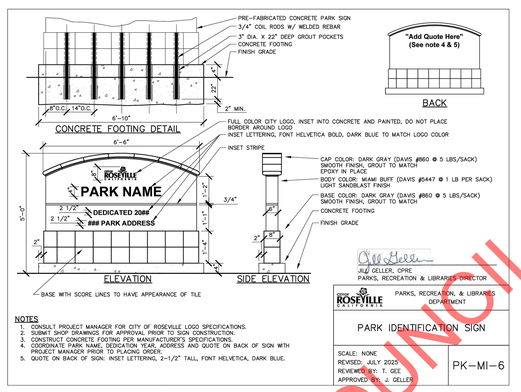

JILL GELLER, CPRE
PARKS, RECREATION & LIBRARIES DIRECTOR

CITY OF ROSEVILLE CALIFORNIA — PARKS, RECREATION, & LIBRARIES DEPARTMENT

PARK IDENTIFICATION SIGN

SCALE: NONE
REVISED: JULY 2025
REVIEWED BY: T. GEE
APPROVED BY: J. GELLER

PK–MI–6

NOTES

1. CONSULT PROJECT MANAGER FOR CITY OF ROSEVILLE LOGO SPECIFICATIONS.
2. SUBMIT SHOP DRAWINGS FOR APPROVAL PRIOR TO SIGN CONSTRUCTION.
3. CONSTRUCT CONCRETE FOOTING PER MANUFACTURER'S SPECIFICATIONS.
4. COORDINATE PARK NAME, DEDICATION YEAR, ADDRESS AND QUOTE ON BACK OF SIGN WITH PROJECT MANAGER PRIOR TO PLACING ORDER.
5. QUOTE ON BACK OF SIGN: INSET LETTERING, 2–1/2" TALL, FONT HELVETICA, DARK BLUE.

6 8.0 PARK IDENTIFICATION SIGN

N.T.S. P-25-034-09

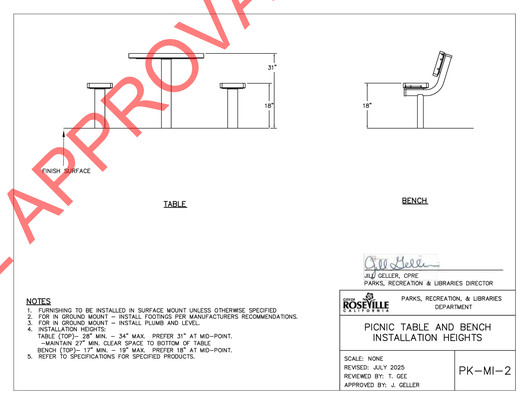

NOTES

1. FURNISHING TO BE INSTALLED IN SURFACE MOUNT UNLESS OTHERWISE SPECIFIED
2. FOR IN GROUND MOUNT – INSTALL FOOTINGS PER MANUFACTURERS RECOMMENDATIONS.
3. FOR IN GROUND MOUNT – INSTALL PLUMB AND LEVEL.
4. INSTALLATION HEIGHTS:
   TABLE (TOP)– 28" MIN. – 34" MAX. PREFER 31" AT MID–POINT.
   –MAINTAIN 27" MIN. CLEAR SPACE TO BOTTOM OF TABLE
   BENCH (TOP)– 17" MIN. – 19" MAX. PREFER 18" AT MID–POINT.
5. REFER TO SPECIFICATIONS FOR SPECIFIED PRODUCTS.

JILL GELLER, CPRE
PARKS, RECREATION & LIBRARIES DIRECTOR

CITY OF ROSEVILLE CALIFORNIA — PARKS, RECREATION, & LIBRARIES DEPARTMENT

PICNIC TABLE AND BENCH INSTALLATION HEIGHTS

SCALE: NONE
REVISED: JULY 2025
REVIEWED BY: T. GEE
APPROVED BY: J. GELLER

PK–MI–2

7 8.0 PICNIC TABLE AND BENCH INSTALLATION HEIGHTS

N.T.S. P-25-034-08

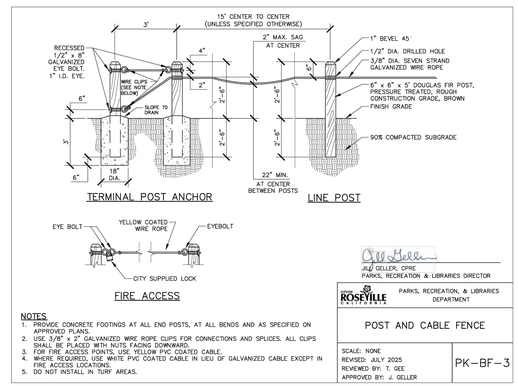

FIRE ACCESS

JILL GELLER, CPRE
PARKS, RECREATION & LIBRARIES DIRECTOR

CITY OF ROSEVILLE CALIFORNIA — PARKS, RECREATION, & LIBRARIES DEPARTMENT

POST AND CABLE FENCE

SCALE: NONE
REVISED: JULY 2025
REVIEWED BY: T. GEE
APPROVED BY: J. GELLER

PK–BF–3

NOTES

1. PROVIDE CONCRETE FOOTINGS AT ALL END POSTS, AT ALL BENDS AND AS SPECIFIED ON APPROVED PLANS.
2. USE 3/8" Ø GALVANIZED WIRE ROPE CLIPS FOR CONNECTIONS AND SPLICES. ALL CLIPS SHALL BE A FORGED WITH NUTS FACING DOWNWARD.
3. FOR FIRE ACCESS POINTS, USE YELLOW PVC COATED CABLE.
4. WHERE REQUIRED, USE WHITE PVC COATED CABLE IN LIEU OF GALVANIZED CABLE EXCEPT IN FIRE ACCESS LOCATIONS.
5. DO NOT INSTALL IN TURF AREAS.

8 8.0 POST AND CABLE FENCE

N.T.S. P-25-034-30

ADD ALTERNATE #6

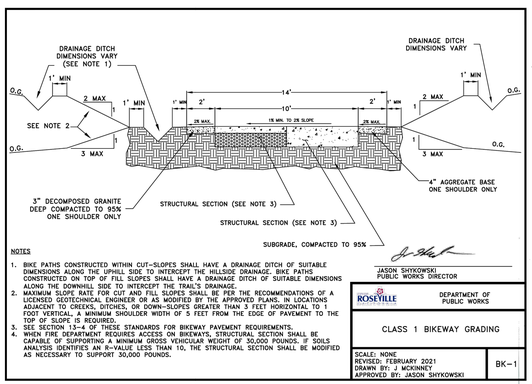

NOTES

1. BIKE PATHS CONSTRUCTED WITHIN CUT–SLOPES SHALL HAVE A DRAINAGE DITCH OF SUITABLE DIMENSIONS ALONG THE UPHILL SIDE TO INTERCEPT THE HILLSIDE DRAINAGE. BIKE PATHS CONSTRUCTED ON TOP OF FILL SLOPES SHALL HAVE A DRAINAGE DITCH OF SUITABLE DIMENSIONS ALONG THE DOWNHILL SIDE TO INTERCEPT THE TRAIL'S DRAINAGE.
2. MAXIMUM SLOPE RATE FOR CUT AND FILL SLOPES SHALL BE PER THE RECOMMENDATIONS OF A LICENSED GEOTECHNICAL ENGINEER OR AS MODIFIED BY THE APPROVED PLANS. IN LOCATIONS ADJACENT TO CREEKS, DITCHES, OR DOWN–SLOPES GREATER THAN 3 FEET HORIZONTAL TO 1 FOOT VERTICAL, A MINIMUM SHOULDER WIDTH OF 5 FEET FROM THE EDGE OF PAVEMENT TO THE TOP OF SLOPE IS REQUIRED.
3. SEE SECTION 13–4 OF THESE STANDARDS FOR BIKEWAY PAVEMENT REQUIREMENTS.
4. WHEN FIRE DEPARTMENT REQUIRES ACCESS ON BIKEWAYS, STRUCTURAL SECTION SHALL BE CAPABLE OF SUPPORTING A MINIMUM GROSS VEHICULAR WEIGHT OF 30,000 POUNDS. IF SOILS ANALYSIS IDENTIFIES AN R–VALUE LESS THAN 10, THE STRUCTURAL SECTION SHALL BE MODIFIED AS NECESSARY TO SUPPORT 30,000 POUNDS.

JASON SHYKOWSKI
PUBLIC WORKS DIRECTOR

CITY OF ROSEVILLE CALIFORNIA — DEPARTMENT OF PUBLIC WORKS

CLASS 1 BIKEWAY GRADING

SCALE: NONE
REVISED: FEBRUARY 2021
DRAWN BY: J MCKINNEY
APPROVED BY: JASON SHYKOWSKI

BK–1

9 8.0 CLASS 1 BIKEWAY GRADING

N.T.S. P-25-034-34

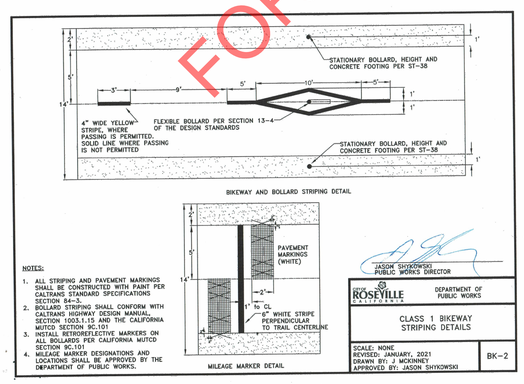

NOTES:

1. ALL STRIPING AND PAVEMENT MARKINGS SHALL BE CONSTRUCTED WITH PAINT PER CALTRANS STANDARD SPECIFICATIONS SECTION 84–3.
2. BOLLARD STRIPING SHALL CONFORM WITH CALTRANS HIGHWAY DESIGN MANUAL, SECTION 1003.1.15 AND THE CALIFORNIA MUTCD SECTION 9C.101
3. INSTALL RETROREFLECTIVE MARKERS ON ALL BOLLARDS PER CALIFORNIA MUTCD SECTION 9C.101
4. MILEAGE MARKER DESIGNATIONS AND LOCATIONS SHALL BE APPROVED BY THE DEPARTMENT OF PUBLIC WORKS.

JASON SHYKOWSKI
PUBLIC WORKS DIRECTOR

CITY OF ROSEVILLE CALIFORNIA — DEPARTMENT OF PUBLIC WORKS

CLASS 1 BIKEWAY STRIPING DETAILS

SCALE: NONE
REVISED: JANUARY, 2021
DRAWN BY: J MCKINNEY
APPROVED BY: JASON SHYKOWSKI

BK–2

10 8.0 CLASS 1 BIKEWAY STRIPING DETAILS

N.T.S. P-25-034-35

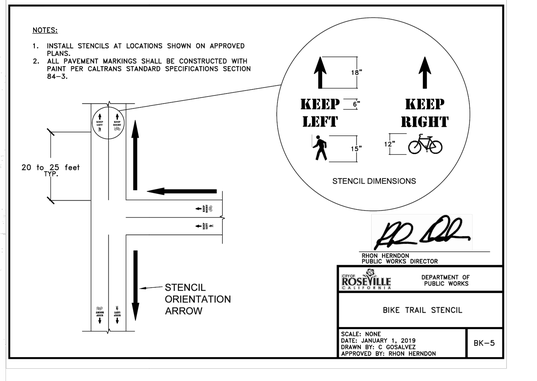

RHON HERNDON
PUBLIC WORKS DIRECTOR

CITY OF ROSEVILLE CALIFORNIA — DEPARTMENT OF PUBLIC WORKS

BIKE TRAIL STENCIL

SCALE: NONE
DATE: JANUARY 1, 2019
DRAWN BY: C GOSALVEZ
APPROVED BY: RHON HERNDON

BK–5

11 8.0 BIKE TRAIL STENCIL

N.T.S. P-25-034-37

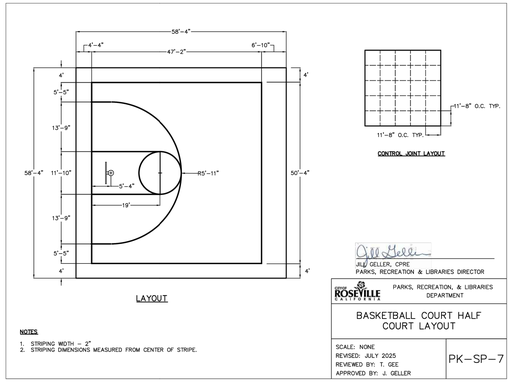

NOTES

1. STRIPING WIDTH – 2"
2. STRIPING DIMENSIONS MEASURED FROM CENTER OF STRIPE.

JILL GELLER, CPRE
PARKS, RECREATION & LIBRARIES DIRECTOR

CITY OF ROSEVILLE CALIFORNIA — PARKS, RECREATION, & LIBRARIES DEPARTMENT

BASKETBALL COURT HALF COURT LAYOUT

SCALE: NONE
REVISED: JULY 2025
REVIEWED BY: T. GEE
APPROVED BY: J. GELLER

PK–SP–7

12 8.0 BASKETBALL COURT HALF COURT LAYOUT

N.T.S. P-25-034-31

FOR COUNCIL APPROVAL ONLY

CO-61 PARK
5125 ASHBROOK ST,
ROSEVILLE, CA 95747

SUBMITTAL	DATE
30% Submittal	09/30/25
99% Submittal	11/18/25
100% Submittal	02/09/26

PROJECT NO: 25034
DRAWN BY: CM/DS
CHECKED BY: BW
SCALE: As Shown

SHEET TITLE
LANDSCAPE DETAILS

SHEET
8.0
16 OF 28

File Path: I:\Projects\2025\25034_CO61Park\L3_Construction\Documents\25034_01.dwg Plot Date: 2/9/26 Saved By: Cmo
Copyright © 2026 Callander Associates Landscape Architecture, Inc.

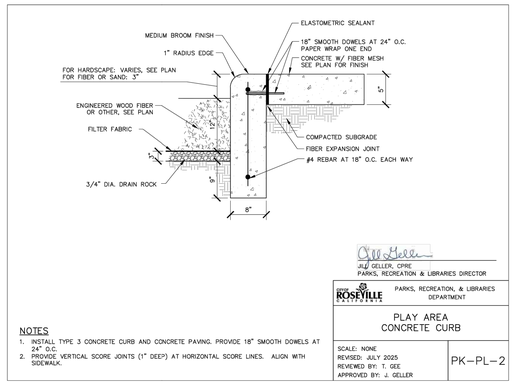

NOTES

1. INSTALL TYPE 3 CONCRETE CURB AND CONCRETE PAVING. PROVIDE 18" SMOOTH DOWELS AT 24" O.C.
2. PROVIDE VERTICAL SCORE JOINTS (1" DEEP) AT HORIZONTAL SCORE LINES. ALIGN WITH SIDEWALK.

JILL GELLER, CPRE
PARKS, RECREATION & LIBRARIES DIRECTOR

CITY OF ROSEVILLE CALIFORNIA — PARKS, RECREATION, & LIBRARIES DEPARTMENT

PLAY AREA CONCRETE CURB

SCALE: NONE
REVISED: JULY 2025
REVIEWED BY: T. GEE
APPROVED BY: J. GELLER

PK–PL–2

1 8.1 PLAY AREA CURB

N.T.S. P-25-034-27

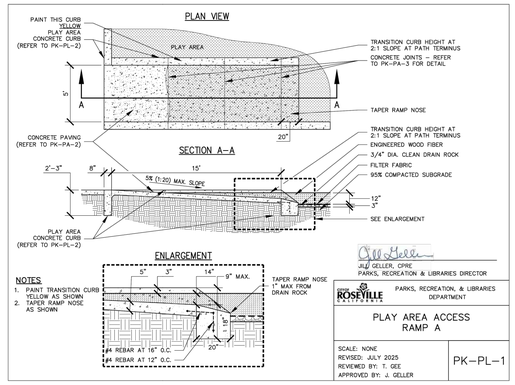

NOTES

1. PAINT TRANSITION CURB YELLOW AS SHOWN
2. TAPER RAMP NOSE AS SHOWN

JILL GELLER, CPRE
PARKS, RECREATION & LIBRARIES DIRECTOR

CITY OF ROSEVILLE CALIFORNIA — PARKS, RECREATION, & LIBRARIES DEPARTMENT

PLAY AREA ACCESS RAMP A

SCALE: NONE
REVISED: JULY 2025
REVIEWED BY: T. GEE
APPROVED BY: J. GELLER

PK–PL–1

2 8.1 PLAY AREA ACCESS RAMP

N.T.S. P-25-034-26

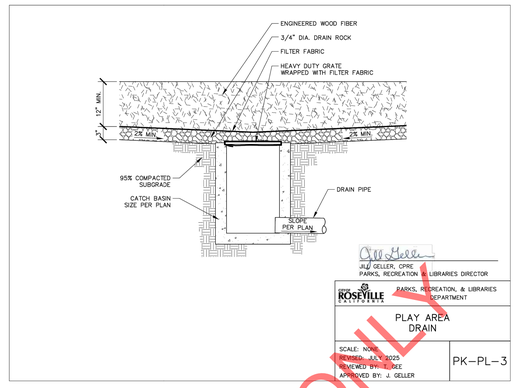

JILL GELLER, CPRE
PARKS, RECREATION & LIBRARIES DIRECTOR

CITY OF ROSEVILLE CALIFORNIA — PARKS, RECREATION, & LIBRARIES DEPARTMENT

PLAY AREA DRAIN

SCALE: NONE
REVISED: JULY 2025
REVIEWED BY: T. GEE
APPROVED BY: J. GELLER

PK–PL–3

3 8.1 PLAY AREA DRAIN

N.T.S. P-25-034-28

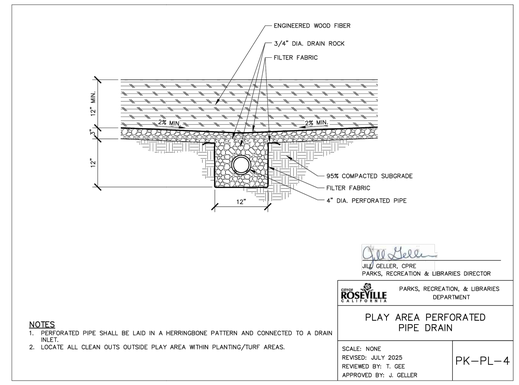

NOTES

1. PERFORATED PIPE SHALL BE LAID IN A HERRINGBONE PATTERN AND CONNECTED TO A DRAIN INLET.
2. LOCATE ALL CLEAN OUTS OUTSIDE PLAY AREA WITHIN PLANTING/TURF AREAS.

JILL GELLER, CPRE
PARKS, RECREATION & LIBRARIES DIRECTOR

CITY OF ROSEVILLE CALIFORNIA — PARKS, RECREATION, & LIBRARIES DEPARTMENT

PLAY AREA PERFORATED PIPE DRAIN

SCALE: NONE
REVISED: JULY 2025
REVIEWED BY: T. GEE
APPROVED BY: J. GELLER

PK–PL–4

4 8.1 PLAY AREA PERFORATED PIPE DRAIN

N.T.S. P-25-034-29

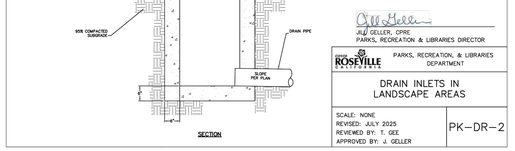

JILL GELLER, CPRE
PARKS, RECREATION & LIBRARIES DIRECTOR

CITY OF ROSEVILLE CALIFORNIA — PARKS, RECREATION, & LIBRARIES DEPARTMENT

DRAIN INLETS IN LANDSCAPE AREAS

SCALE: NONE
REVISED: JULY 2025
REVIEWED BY: T. GEE
APPROVED BY: J. GELLER

PK–DR–2

5 8.1 DRAIN INLET IN LANDSCAPE AREAS

N.T.S. P-25-034-33

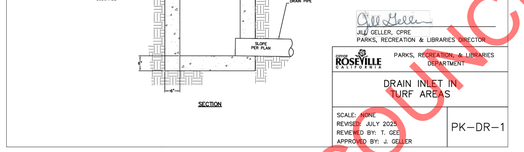

JILL GELLER, CPRE
PARKS, RECREATION & LIBRARIES DIRECTOR

CITY OF ROSEVILLE CALIFORNIA — PARKS, RECREATION, & LIBRARIES DEPARTMENT

DRAIN INLET IN TURF AREAS

SCALE: NONE
REVISED: JULY 2025
REVIEWED BY: T. GEE
APPROVED BY: J. GELLER

PK–DR–1

6 8.1 DRAIN INLET IN TURF AREAS

N.T.S. P-25-034-32

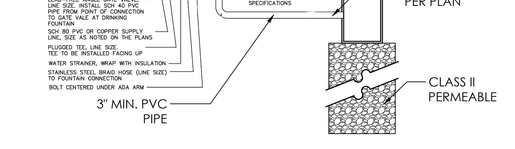

NOTES

1. PROVIDE LINE SIZE TWO WAY CLEAN OUT EVERY 100' ON SANITARY SEWER LINE UPSTREAM OF Y.
2. 10" STAINLESS STEEL SURFACE CARRIER REQUIRED, EXTERNAL MOUNT.
3. FOUNTAIN BASE PER MANUFACTURER'S SPECIFICATIONS.
4. LOCATION OF DRINKING FOUNTAIN "ON" BUTTON AND LOCATION OF BOTTLE FILLER SPOUT (IF APPLICABLE) SHALL BE DETERMINED VIA THE SUBMITTAL PROCESS.
5. INCLUDE BOTTLE FILLER OPTION AS SHOWN ON PLANS/SPECIFICATIONS.
6. MAY DISCHARGE TO SUMP IN LIEU OF SEWER CONNECTION IF SHOWN ON PLANS.

7 8.1 DRINKING FOUNTAIN (MODIFIED CITY DETAIL)

N.T.S. P-25-034-06

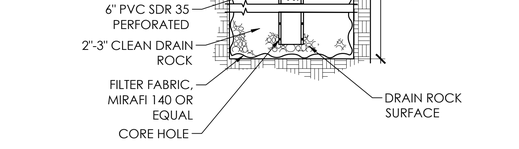

8 8.1 DRYWELL

N.TS. P-25-034-67

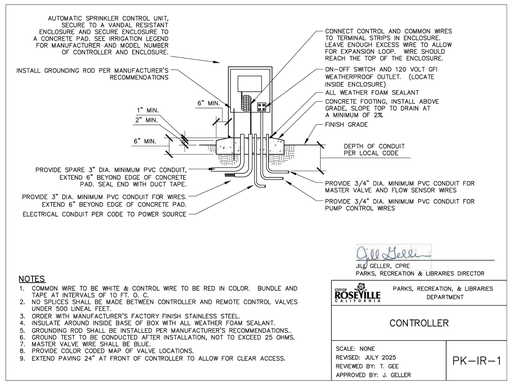

NOTES

1. COMMON WIRE TO BE WHITE & CONTROL WIRE TO BE RED IN COLOR. BUNDLE AND TAPE AT INTERVALS OF 10 FT. O. C.
2. NO SPLICES SHALL BE MADE BETWEEN CONTROLLER AND REMOTE CONTROL VALVES UNDER 500 LINEAL FEET.
3. ORDER WITH MANUFACTURER'S FACTORY FINISH STAINLESS STEEL.
4. INSULATE AROUND INSIDE BASE OF BOX WITH ALL WEATHER FOAM SEALANT.
5. GROUNDING ROD SHALL BE INSTALLED PER MANUFACTURER'S RECOMMENDATIONS..
6. GROUND TEST TO BE CONDUCTED AFTER INSTALLATION, NOT TO EXCEED 25 OHMS.
7. MASTER VALVE WIRE SHALL BE BLUE.
8. PROVIDE COLOR CODED MAP OF VALVE LOCATIONS.
9. EXTEND PARKING 24" AT FRONT OF CONTROLLER TO ALLOW FOR CLEAR ACCESS.

JILL GELLER, CPRE
PARKS, RECREATION & LIBRARIES DIRECTOR

CITY OF ROSEVILLE CALIFORNIA — PARKS, RECREATION, & LIBRARIES DEPARTMENT

CONTROLLER

SCALE: NONE
REVISED: JULY 2025
REVIEWED BY: T. GEE
APPROVED BY: J. GELLER

PK–IR–1

9 8.1 CONTROLLER

N.T.S. P-25-034-10

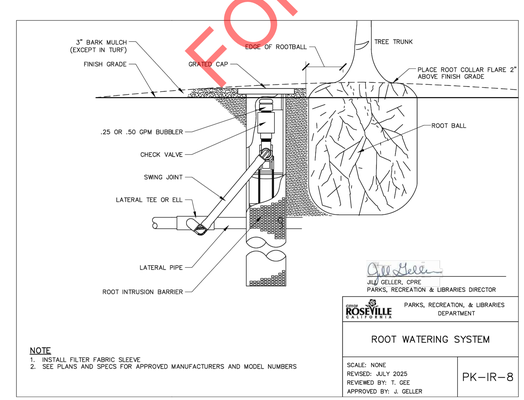

NOTE

1. INSTALL FILTER FABRIC SLEEVE.
2. SEE PLANS AND SPECS FOR APPROVED MANUFACTURERS AND MODEL NUMBERS

JILL GELLER, CPRE
PARKS, RECREATION & LIBRARIES DIRECTOR

CITY OF ROSEVILLE CALIFORNIA — PARKS, RECREATION, & LIBRARIES DEPARTMENT

ROOT WATERING SYSTEM

SCALE: NONE
REVISED: JULY 2025
REVIEWED BY: T. GEE
APPROVED BY: J. GELLER

PK–IR–8

10 8.1 ROOT WATERING SYSTEM

N.T.S. P-25-034-17

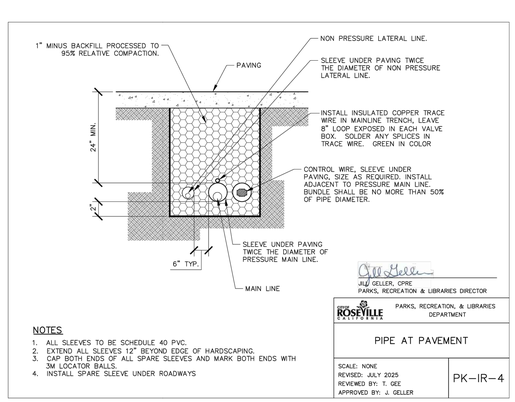

NOTES

1. ALL SLEEVES TO BE SCHEDULE 40 PVC.
2. EXTEND ALL SLEEVES 12" BEYOND EDGE OF HARDSCAPING.
3. CAP BOTH ENDS OF ALL SPARE SLEEVES AND MARK BOTH ENDS WITH 3M LOCATOR BALLS.
4. INSTALL SPARE SLEEVE UNDER ROADWAYS

JILL GELLER, CPRE
PARKS, RECREATION & LIBRARIES DIRECTOR

CITY OF ROSEVILLE CALIFORNIA — PARKS, RECREATION, & LIBRARIES DEPARTMENT

PIPE AT PAVEMENT

SCALE: NONE
REVISED: JULY 2025
REVIEWED BY: T. GEE
APPROVED BY: J. GELLER

PK–IR–4

11 8.1 PIPE TRENCH

N.T.S. P-25-034-13

FOR COUNCIL APPROVAL ONLY

File Path: T:\Projects\2025\25034_CO61Park\3_Construction\Documents\25034_01.dwg Plot Date: 2/10/26 Saved By: Cmo
Copyright © 2025 Callander Associates Landscape Architecture, Inc.

CALA
12150 Tributary Point Drive, Suite 140
Gold River, CA 95670
T 916.985.4366
www.callanderassociates.com

REVISION	DATE

REGISTERED LANDSCAPE ARCHITECT — KEITH W. BURRELL — Signature — May 31, 2027 Renewal Date — Date — STATE OF CALIFORNIA

CO-61 PARK

5125 ASHBROOK ST,
ROSEVILLE, CA 95747

SUBMITTAL	DATE
30% Submittal	09/30/25
99% Submittal	11/18/25
100% Submittal	02/09/26

PROJECT NO:	25034
DRAWN BY:	CM/DS
CHECKED BY:	BW
SCALE:	As Shown

SHEET TITLE

LANDSCAPE DETAILS

SHEET

8.1

17 OF 28

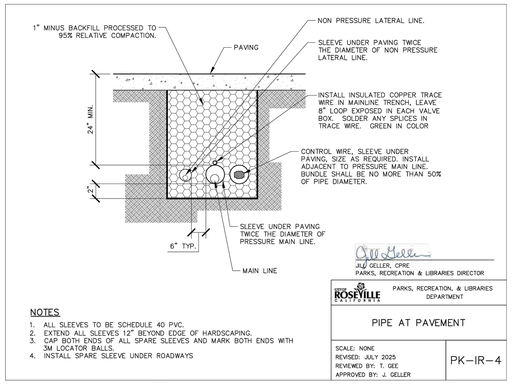

NOTES

1. ALL SLEEVES TO BE SCHEDULE 40 PVC.
2. EXTEND ALL SLEEVES 12" BEYOND EDGE OF HARDSCAPING.
3. CAP BOTH ENDS OF ALL SPARE SLEEVES AND MARK BOTH ENDS WITH 3M LOCATOR BALLS.
4. INSTALL SPARE SLEEVE UNDER ROADWAYS

JILL GELLER, CPRE
PARKS, RECREATION & LIBRARIES DIRECTOR

CITY OF ROSEVILLE — PARKS, RECREATION, & LIBRARIES DEPARTMENT

PIPE AT PAVEMENT

SCALE: NONE
REVISED: JULY 2025
REVIEWED BY: T. GEE
APPROVED BY: J. GELLER

PK–IR–4

1 / 8.2 PIPE AT PAVEMENT
N.T.S. P-25-034-14

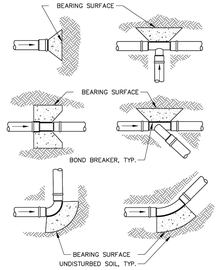

MINIMUM BEARING SURFACE AREA

PIPE SIZE	TEE AND PLUG	90 DEGREE BEND	45 DEGREE BEND
1–1/2"	0.45 SQ. FT.	0.63 SQ. FT.	0.34 SQ. FT.
2"	0.69 SQ. FT.	0.97 SQ. FT.	0.53 SQ. FT.
2–1/2"	1.0 SQ. FT.	1.41 SQ. FT.	0.77 SQ. FT.
3"	1.48 SQ. FT.	2.10 SQ. FT.	1.14 SQ. FT.
4"	2.43 SQ. FT.	3.45 SQ. FT.	1.87 SQ. FT.
6"	5.25 SQ. FT.	7.41 SQ. FT.	4.02 SQ. FT.
8"	9.08 SQ. FT.	12.83 SQ. FT.	6.96 SQ. FT.
10"	14.93 SQ. FT.	21.07 SQ. FT.	11.44 SQ. FT.

NOTES

1. SIZE THRUST BLOCKS AS SPECIFIED ABOVE.
2. DO NOT ENCASE CONTROL WIRES IN THE CONCRETE.
3. ALL FITTINGS MUST BE WRAPPED WITH POLYETHYLENE TO PREVENT CONCRETE FROM ADHERING TO BOLTS OR PIPES.
4. JOINTS AND BOLTS SHALL BE ACCESSIBLE FOR REPAIRS.

JILL GELLER, CPRE
PARKS, RECREATION & LIBRARIES DIRECTOR

CITY OF ROSEVILLE — PARKS, RECREATION, & LIBRARIES DEPARTMENT

THRUST BLOCKS

SCALE: NONE
REVISED: JULY 2025
REVIEWED BY: T. GEE
APPROVED BY: J. GELLER

PK–IR–9

2 / 8.2 THRUST BLOCKS
N.T.S. P-25-034-18

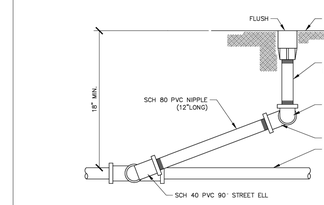

NOTES

1. LOCATE HEAD 2" FROM WALKS, CURBS, HARDSCAPING, MOW STRIPS, AND HEADER BOARDS, OR AS REQUIRED BY CURRENT WELO REGULATIONS.
2. LOCATE HEAD 12" FROM ALL STRUCTURES.
3. USE TEFLON TAPE ON ALL THREADED FITTINGS. DO NOT USE MARLEX FITTINGS.
4. SWING JOINT ASSEMBLY PIPE SIZE MUST MATCH INLET SIZE OF SPRINKLER.
5. PREFABRICATED SWING JOINTS ARE ALLOWED, UPON APPROVAL.

JILL GELLER, CPRE
PARKS, RECREATION & LIBRARIES DIRECTOR

CITY OF ROSEVILLE — PARKS, RECREATION, & LIBRARIES DEPARTMENT

POP-UP ROTOR

SCALE: NONE
REVISED: JULY 2025
REVIEWED BY: T. GEE
APPROVED BY: J. GELLER

PK–IR–6

3 / 8.2 POP-UP ROTOR
N.T.S. P-25-034-15

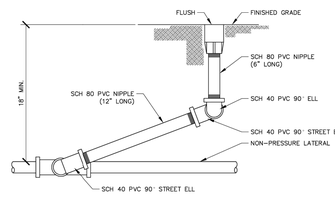

NOTES

1. LOCATE SPRAY HEAD 24" FROM WALKS, CURBS, HARDSCAPING, MOW STRIPS, AND HEADER BOARDS, OR AS REQUIRED BY CURRENT WELO REGULATIONS.
2. LOCATE SPRAY HEADS 12" FROM WALKS, CURBS, HARDSCAPING, MOW STRIPS, AND HEADER BOARDS WHEN PLACED IN TURF AREAS.
3. LOCATE SPRAY HEADS 12" FROM ALL STRUCTURES IN TURF AREAS AND 6" FROM ALL STRUCTURES IN GROUND-COVER AREAS.
4. USE TEFLON TAPE ON ALL THREADED FITTINGS. DO NOT USE MARLEX FITTINGS.
5. PREFABRICATED SWING JOINT ARE ALLOWED, UPON APPROVAL.
6. 6" LONG SCH 80 PVC RISER NIPPLE NOT REQUIRED FOR 12" POPUP HEADS.

JILL GELLER, CPRE
PARKS, RECREATION & LIBRARIES DIRECTOR

CITY OF ROSEVILLE — PARKS, RECREATION, & LIBRARIES DEPARTMENT

POP-UP SPRAY

SCALE: NONE
REVISED: JULY 2025
REVIEWED BY: T. GEE
APPROVED BY: J. GELLER

PK–IR–7

5 / 8.2 POP-UP SPRAY
N.T.S. P-25-034-16

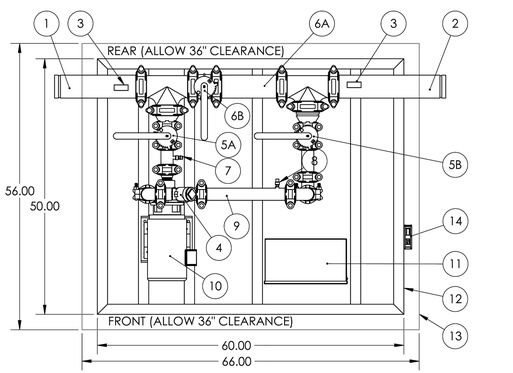

NOTES

1. COMPACT SOIL AROUND BOX TO 80% MINIMUM COMPACTION.
2. CLEAR DRAIN ROCK PRIOR TO INSTALLING VALVE BOX.
3. PLATE VALVE AND FITTINGS SHALL BE LINE SIZE UNLESS OTHERWISE NOTED.
4. USE TEFLON TAPE ON ALL THREADED FITTINGS.
5. LOCATE VALVES IN SHRUB/GROUNDCOVER AREAS WHENEVER POSSIBLE.
6. LOOP EXTRA TRACER WIRE UP TO TOP OF BOX.

JILL GELLER, CPRE
PARKS, RECREATION & LIBRARIES DIRECTOR

CITY OF ROSEVILLE — PARKS, RECREATION, & LIBRARIES DEPARTMENT

VALVE 3 INCH AND SMALLER

SCALE: NONE
REVISED: JULY 2025
REVIEWED BY: T. GEE
APPROVED BY: J. GELLER

PK–IR–10

6 / 8.2 VALVE 3 INCH AND SMALLER
N.T.S. P-25-034-19

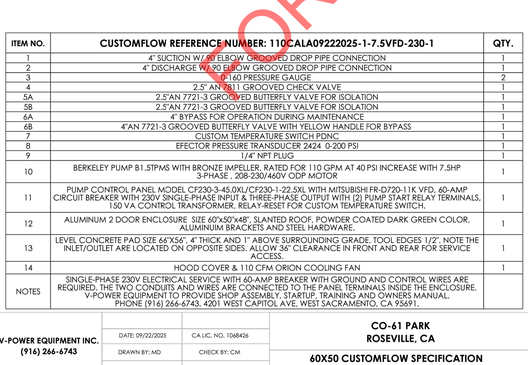

NOTES

1. INSTALL VALVE BOXES SO THAT THE TOP OF THE BOX IS FLUSH WITH THE TOP OF THE ADJACENT HARDSCAPE.
2. USE TEFLON TAPE ON ALL THREADED CONNECTIONS.

JILL GELLER, CPRE
PARKS, RECREATION & LIBRARIES DIRECTOR

CITY OF ROSEVILLE — PARKS, RECREATION, & LIBRARIES DEPARTMENT

VALVE QUICK COUPLING

SCALE: NONE
REVISED: JULY 2025
REVIEWED BY: T. GEE
APPROVED BY: J. GELLER

PK–IR–13

8 / 8.2 QUICK COUPLING VALVE
N.T.S. P-25-034-21

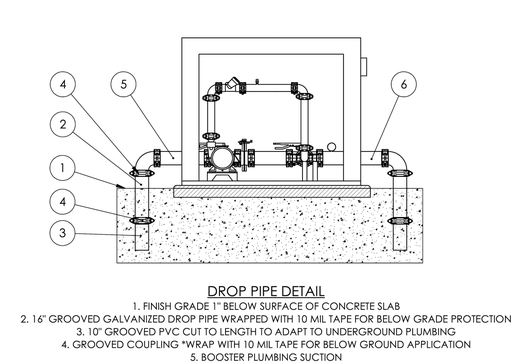

NOTES

1. INSTALL VALVES A MINIMUM OF 12" FROM STRUCTURES OR HARDSCAPING.
2. PLACE VALVE BOX AT RIGHT ANGLES TO STRUCTURES OR HARDSCAPING.
3. INSTALL VALVE BOX SO THAT TOP OF BOX IS FLUSH WITH ADJACENT HARDSCAPING.
4. USE TEFLON TAPE ON ALL MALE THREADS.
5. VALVES ON MAINLINES 3" AND LARGER REQUIRE SADDLE TAPS, 2 ½" AND SMALLER MAINLINE REQUIRES GLUED SCHEDULE 80 FITTINGS.
6. PROVIDE SCHEDULE 80 THREADED UNION ON BOTH UPSTREAM AND DOWNSTREAM SIDES.
7. INSULATE AROUND PIPE AT BOX OPENINGS WITH PLASTIC SHEETING TO PREVENT SOIL FROM ENTERING BOX.
8. REFER TO SPECIFICATIONS FOR REQUIREMENTS FOR TAPING, EXPANSION COILS, WIRE CONNECTIONS, ETC.
9. ALL RCV'S SHALL BE TAGGED INDICATING STATION #'S.
10. ALL VALVE BOXES SHALL HAVE STATION #'S PERMANENTLY BURNED ON VALVE BOX LIDS. MARKINGS SHALL BE AS FOLLOWS:
    TURF VALVES: T#
    LANDSCAPE AREA VALVES: L#
    BUBBLER VALVES: B#
11. REFER TO PK–I1 FOR INFIELD VALVES DETAILS AND INFIELD VALVE BOX LAYOUT

JILL GELLER, CPRE
PARKS, RECREATION & LIBRARIES DIRECTOR

CITY OF ROSEVILLE — PARKS, RECREATION, & LIBRARIES DEPARTMENT

VALVE REMOTE CONTROL AT GRADE

SCALE: NONE
REVISED: JULY 2025
REVIEWED BY: T. GEE
APPROVED BY: J. GELLER

PK–IR–14

9 / 8.2 REMOTE CONTROL VALVE
N.T.S. P-25-034-22

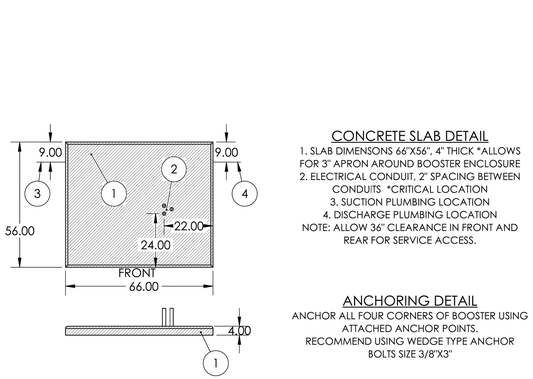

NOTES

1. INSTALL VALVES A MINIMUM OF 12" FROM STRUCTURES OR HARDSCAPING.
2. INSTALL VALVES IN PLANTER BEDS WHEREVER POSSIBLE.
3. PLACE VALVE BOX AT RIGHT ANGLES TO STRUCTURES OR HARDSCAPING.
4. INSTALL VALVE BOX SO THAT TOP OF BOX IS FLUSH WITH ADJACENT HARDSCAPING.
5. USE TEFLON TAPE ON ALL MALE THREADS.
6. VALVES ON MAINLINES 3" AND LARGER REQUIRE SADDLE TAPS, 2 ½" AND SMALLER MAINLINE REQUIRES GLUED SCHEDULE 80 FITTINGS.
7. PROVIDE SCHEDULE 80 THREADED UNION ON BOTH UPSTREAM AND DOWNSTREAM SIDES.
8. INSULATE AROUND PIPE AT BOX OPENINGS WITH PLASTIC SHEETING TO PREVENT SOIL FROM ENTERING BOX.
9. REFER TO SPECIFICATIONS FOR REQUIREMENTS FOR TAPING, EXPANSION COILS, WIRE CONNECTIONS, ETC.
10. ALL RCV'S SHALL BE TAGGED INDICATING STATION #'S.
11. ALL VALVE BOXES SHALL HAVE STATION #'S PERMANENTLY BURNED ON VALVE BOX LIDS. MARKINGS SHALL BE AS FOLLOWS:
    TURF VALVES: T#
    LANDSCAPE AREA VALVES: L#
    BUBBLER VALVES: B#

JILL GELLER, CPRE
PARKS, RECREATION & LIBRARIES DIRECTOR

CITY OF ROSEVILLE — PARKS, RECREATION, & LIBRARIES DEPARTMENT

VALVE DRIP CONTROL

SCALE: NONE
REVISED: JULY 2025
REVIEWED BY: T. GEE
APPROVED BY: J. GELLER

PK–IR–12

7 / 8.2 DRIP CONTROL VALVE
N.T.S. P-25-034-62

ITEM NO.	CUSTOMFLOW REFERENCE NUMBER: 110CALA09222025-1-7.5VFD-230-1	QTY.
1	4" SUCTION W/ 90 ELBOW GROOVED DROP PIPE CONNECTION	1
2	4" DISCHARGE W/ 90 ELBOW GROOVED DROP PIPE CONNECTION	1
3	0-160 PRESSURE GAUGE	2
4	2.5" AN 7811 GROOVED CHECK VALVE	1
5A	2.5"AN 7721-3 GROOVED BUTTERFLY VALVE FOR ISOLATION	1
5B	2.5"AN 7721-3 GROOVED BUTTERFLY VALVE FOR ISOLATION	1
6A	4" BYPASS FOR OPERATION DURING MAINTENANCE	1
6B	4"AN 7721-3 GROOVED BUTTERFLY VALVE WITH YELLOW HANDLE FOR BYPASS	1
7	CUSTOM TEMPERATURE SWITCH PDNC	1
8	EFECTOR PRESSURE TRANSDUCER 2424 0-200 PSI	1
9	1/4" NPT PLUG	1
10	BERKELEY PUMP B1.5TPMS WITH BRONZE IMPELLER, RATED FOR 110 GPM AT 40 PSI INCREASE WITH 7.5HP 3-PHASE , 208-230/460V ODP MOTOR	1
11	PUMP CONTROL PANEL MODEL CF230-3-45.0XL/CF230-1-22.5XL WITH MITSUBISHI FR-D720-11K VFD, 60-AMP CIRCUIT BREAKER WITH 230V SINGLE-PHASE INPUT & THREE-PHASE OUTPUT WITH (2) PUMP START RELAY TERMINALS, 150 VA CONTROL TRANSFORMER, RELAY-RESET FOR CUSTOM TEMPERATURE SWITCH.	1
12	ALUMINUM 2 DOOR ENCLOSURE SIZE 60"x50"x48", SLANTED ROOF, POWDER COATED DARK GREEN COLOR, ALUMINUIM BRACKETS AND STEEL HARDWARE.	1
13	LEVEL CONCRETE PAD SIZE 66"X56", 4" THICK AND 1" ABOVE SURROUNDING GRADE. TOOL EDGES 1/2". NOTE THE INLET/OUTLET ARE LOCATED ON OPPOSITE SIDES. ALLOW 36" CLEARANCE IN FRONT AND REAR FOR SERVICE ACCESS.	1
14	HOOD COVER & 110 CFM ORION COOLING FAN	1
NOTES	SINGLE-PHASE 230V ELECTRICAL SERVICE WITH 60-AMP BREAKER WITH GROUND AND CONTROL WIRES ARE REQUIRED, THE TWO CONDUITS AND WIRES ARE CONNECTED TO THE PANEL TERMINALS INSIDE THE ENCLOSURE. V-POWER EQUIPMENT TO PROVIDE SHOP ASSEMBLY, STARTUP, TRAINING AND OWNERS MANUAL. PHONE (916) 266-6743, 4201 WEST CAPITOL AVE, WEST SACRAMENTO, CA 95691.	

V-POWER EQUIPMENT INC. (916) 266-6743	DATE: 09/22/2025	CA LIC. NO. 1068426	CO-61 PARK ROSEVILLE, CA
	DRAWN BY: MD	CHECK BY: CM	60X50 CUSTOMFLOW SPECIFICATION
			SHEET 1 OF 3

4 / 8.2 BOOSTER PUMP
N.T.S. P-25-034-46

DROP PIPE DETAIL

1. FINISH GRADE 1" BELOW SURFACE OF CONCRETE SLAB
2. 16" GROOVED GALVANIZED DROP PIPE WRAPPED WITH 10 MIL TAPE FOR BELOW GRADE PROTECTION
3. 10" GROOVED PVC CUT TO LENGTH TO ADAPT TO UNDERGROUND PLUMBING
4. GROOVED COUPLING *WRAP WITH 10 MIL TAPE FOR BELOW GROUND APPLICATION
5. BOOSTER PLUMBING SUCTION
6. BOOSTER PLUMBING DISCHARGE

NOTE: POUR CONCRETE THRUST BLOCKS WHERE NEEDED & TEST FOR LEAKS

10 / 8.2 BOOSTER PUMP DROP PIPE
N.T.S. P-25-034-47

CONCRETE SLAB DETAIL

1. SLAB DIMENSONS 66"X56", 4" THICK *ALLOWS FOR 3" APRON AROUND BOOSTER ENCLOSURE
2. ELECTRICAL CONDUIT, 2" SPACING BETWEEN CONDUITS *CRITICAL LOCATION
3. SUCTION PLUMBING LOCATION
4. DISCHARGE PLUMBING LOCATION

NOTE: ALLOW 36" CLEARANCE IN FRONT AND REAR FOR SERVICE ACCESS.

ANCHORING DETAIL

ANCHOR ALL FOUR CORNERS OF BOOSTER USING ATTACHED ANCHOR POINTS.
RECOMMEND USING WEDGE TYPE ANCHOR BOLTS SIZE 3/8"X3"

11 / 8.2 BOOSTER PUMP CONCRETE SLAB
N.T.S. P-25-034-48

FOR COUNCIL APPROVAL ONLY

CALA
12150 Tributary Point Drive, Suite 140
Gold River, CA 95670
T 916.985.4366
www.callanderassociates.com

REVISION	DATE

LICENSED LANDSCAPE ARCHITECT — Signature — May 31, 2027 Renewal Date — Date — STATE OF CALIFORNIA

CO-61 PARK
5125 ASHBROOK ST,
ROSEVILLE, CA 95747

SUBMITTAL	DATE
30% Submittal	09/30/25
99% Submittal	11/18/25
100% Submittal	02/09/26

PROJECT NO: 25034
DRAWN BY: CM/DS
CHECKED BY: BW
SCALE: As Shown

SHEET TITLE
LANDSCAPE DETAILS

SHEET
8.2
18 OF 28

File Path: I:\Projects\2025\25034_CO61Park\3_Construction\Documents\25034_01.dwg Plot Date: 2/10/26 Saved By: Cmo
Copyright © 2025 Callander Associates Landscape Architecture, Inc.

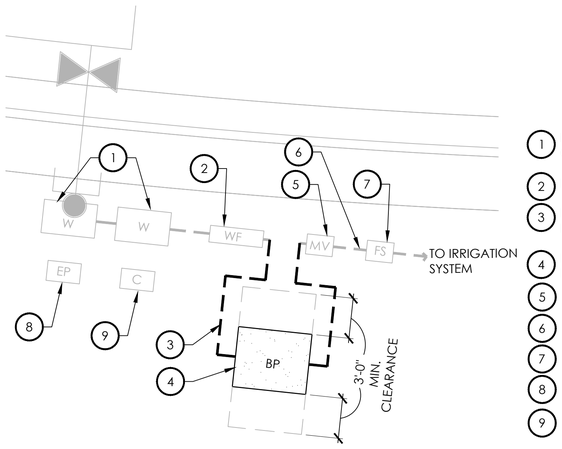

1. EXISTING 3" WATER CONNECTION
2. EXISTING 3" WATER FILTER
3. IRRIGATION MAINLINE, PER IRRIGATION PLANS
4. BOOSTER PUMP, PER IRRIGATION PLANS
5. EXISTING MATER VALVE
6. EXISTING MAINLINE
7. EXISTING FLOW SENSOR
8. EXISTING ELECTRICAL PANEL
9. EXISTING IRRIGATION CONTROLLER

1 8.3 P.O.C. ENLARGEMENT

3/16" = 1'-0"

P-25-034-65

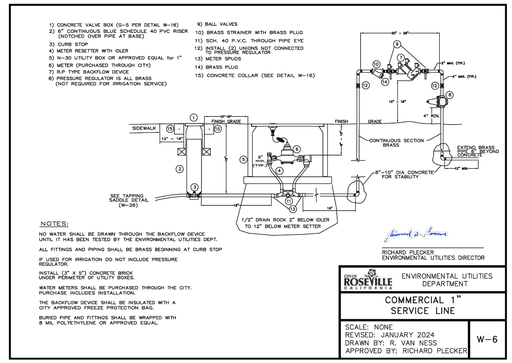

2 8.3 COMMERCIAL 1" SERVICE LINE

N.T.S.

P-25-034-44

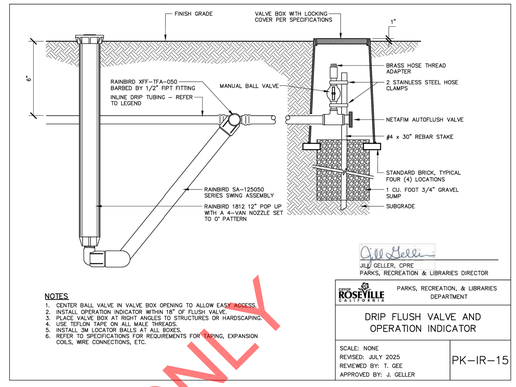

3 8.3 DRIP FLUSH VALVE

N.T.S.

P-25-034-63

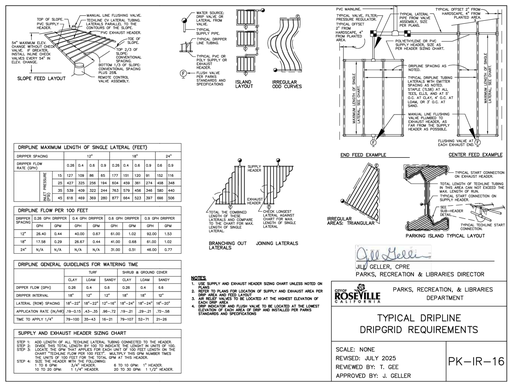

4 8.3 DRIP LAYOUT

N.T.S.

P-25-034-64

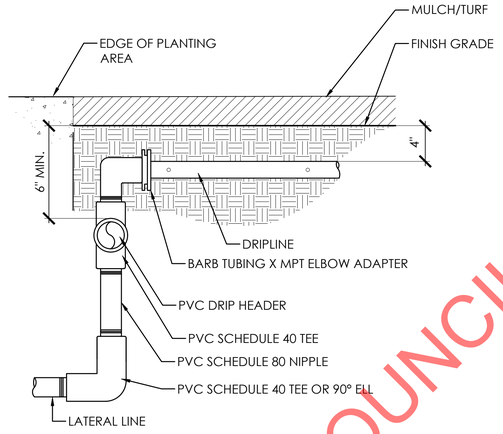

5 8.3 DRIP LATERAL HEADER SUBSURFACE CONNECTION

1 1/2" = 1'-0"

P-CLA-15-15.dwg

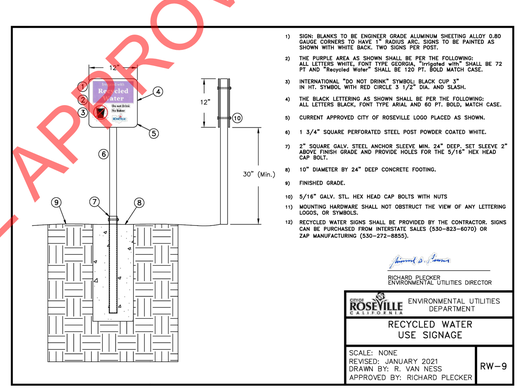

6 8.3 RECYCLED WATER USE SIGNAGE

N.T.S.

P-25-034-45

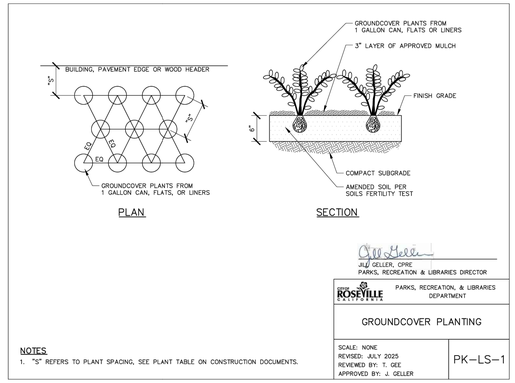

7 8.3 GROUNDCOVER PLANTING

N.T.S.

P-25-034-23

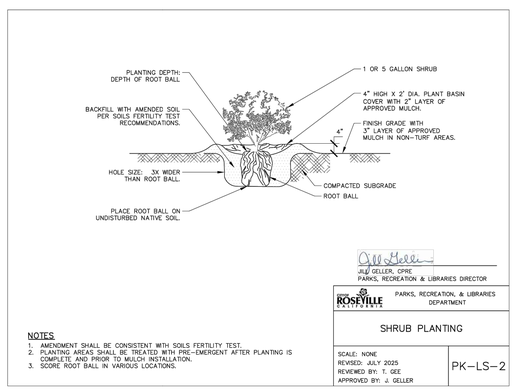

8 8.3 SHRUB PLANTING

N.T.S.

P-25-034-24

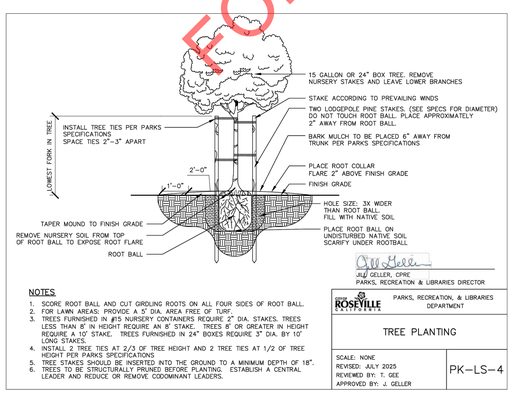

9 8.3 TREE PLANTING

N.T.S.

P-25-034-25

APPROVAL ONLY
FOR COUNCIL

CALA
12150 Tributary Point Drive, Suite 140
Gold River, CA 95670
T 916.985.4366
www.callanderassociates.com

REVISION	DATE



CO-61 PARK

5125 ASHBROOK ST,
ROSEVILLE, CA 95747

SUBMITTAL	DATE
30% Submittal	09/30/25
99% Submittal	11/18/25
100% Submittal	02/09/26

PROJECT NO: 25034
DRAWN BY: CM/DS
CHECKED BY: BW
SCALE: As Shown

SHEET TITLE
LANDSCAPE DETAILS

SHEET
8.3
19 OF 28

811 Know what's below. Call before you dig.

File Path: T:\Projects\2023\25034_CO61\Park\L3_ConstructionDocuments\L25034_DT.dwg Plot Date: 2/1/2026 Saved By: Cmo
Copyright © 2022 Callander Associates Landscape Architecture, Inc.

ADD ALTERNATE #3

poligon®

A Division of PORTERCORP 4240 N. 136th AVE HOLLAND, MI 49424 (616) 888-3500

PROJECT NAME: 25-8118_CO-6

PROJECT LOCATION: ROSEVILLE, CA

BUILDING TYPE: REK 12X20

ROOF TYPE: MULTI-RIB

BUILDING NUMBER: P22812

ORDER NUMBER: 84248

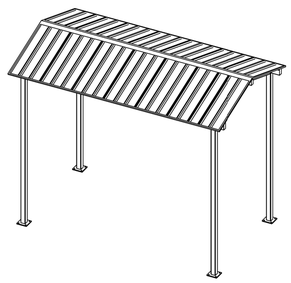

DRAWING LIST:

SHEET NUMBER	DRAWING DESCRIPTION
CS	COVER SHEET
1	ARCHITECTURAL ELEVATIONS
2-2.1	ANCHOR AND FOOTING LAYOUT / DETAILS
3	STRUCTURAL FRAMING PLAN
4-4.1	FRAME CONNECTION DETAILS
5	ELECTRICAL VIEWS - N/A
6-6.1	ROOF LAYOUT
7-7.1	ROOF CONNECTION DETAILS

MANUFACTURER NOTES:

MATERIALS:

DESCRIPTION	ASTM DESIGNATION
TUBE STEEL	A500 (GRADE C)
SCHEDULE PIPE	A53 (GRADE B)
RMT PIPE	A519
LIGHT GAGE COLD FORMED	A1003 (GRADE 50)
STRUCTURAL STEEL PLATE	A36
ROOF PANELS (STEEL)	A653
ANCHOR BOLTS	SEE SHEET 2.1

GENERAL NOTES:

1. PORTER CORP IS RESPONSIBLE ONLY FOR THE STRUCTURAL DESIGN OF THE STEEL STRUCTURE (AND FOUNDATION DESIGN IF APPLICABLE) IT SELLS TO THE BUILDER. PORTER CORP OR THEIR ENGINEER IS NOT THE DESIGN PROFESSIONAL OR ENGINEER OF RECORD FOR THE CONSTRUCTION PROJECT. PORTER CORP IS NOT RESPONSIBLE FOR THE DESIGN OF ANY NON-STRUCTURAL MATERIALS NOT SOLD BY IT OR THEIR INTERFACE AND CONNECTION WITH THE STEEL BUILDING.
2. UNLESS NOTED OTHERWISE, THIS STRUCTURE WAS DESIGNED TO ONLY SUPPORT WHAT IS SHOWN ON THESE DRAWINGS. POLIGON MUST BE CONTACTED IF ANYTHING ELSE IS TO BE ATTACHED TO THIS STRUCTURE (WALLS, COLUMN WRAPS, RAILINGS, ETC.) SO THE DESIGN OF THIS STRUCTURE CAN BE REVIEWED AND POSSIBLY REVISED.
3. THE ENGINEERING SEAL FOR THE STRUCTURE DETAILED IN THESE DRAWINGS IS ONLY VALID IF PORTER CORP DESIGNS AND FABRICATES THE STEEL COMPONENTS. FABRICATING THE STEEL COMPONENTS ELSEWHERE VOIDS THE ENGINEERING PROVIDED BY PORTER CORP.
4. UNLESS NOTED OTHERWISE, THIS STRUCTURE WAS DESIGNED ASSUMING A 20' SEPARATION BETWEEN ANY ADJACENT STRUCTURE WITH AN EAVE HEIGHT EQUAL TO OR GREATER THAN THE EAVE HEIGHT OF THIS STRUCTURE (SEE SNOW DESIGN DATA). IF THAT SEPARATION DOES NOT EXIST AND THE GROUND SNOW LOAD (PG) IS GREATER THAN 0 PSF, POLIGON MUST BE CONTACTED SO THE DESIGN OF THIS STRUCTURE CAN BE REVIEWED AND POSSIBLY REVISED.
5. STRUCTURAL STEEL SHALL BE DETAILED, FABRICATED, AND ERECTED IN ACCORDANCE WITH THE AMERICAN INSTITUTE OF STEEL CONSTRUCTION (AISC) SPECIFICATION MANUAL REFERENCED IN THE GOVERNING BUILDING CODE.
6. ALL WELDING IS PERFORMED BY AMERICAN WELDING SOCIETY (AWS) CERTIFIED WELDERS AND CONFORMS TO AWS D1.1 OR D1.3 AS REQUIRED.
7. TO ENSURE PROPER FIELD INSTALLATION OF STANDARDIZED FABRICATION, REFER TO THE SHIPPING BILL OF MATERIALS AND FINAL INSTALLATION INSTRUCTIONS INCLUDED WITH THE STRUCTURE FOR POSSIBLE SUBSTITUTIONS AND IMPROVEMENTS.
8. FOR PROPER FIELD INSTALLATION OF THE BUILDING IT IS RECOMMENDED THAT THE PRIMARY FRAME INSTALLER AND THE ROOF INSTALLER HAVE A MINIMUM FIVE (5) YEARS DOCUMENTED EXPERIENCE INSTALLING THIS TYPE OF PRODUCT.
9. THE DRAWINGS REPRESENT THE FINISHED STRUCTURE. THE CONTRACTOR SHALL SUPERVISE AND DIRECT THE WORK, AND SHALL BE SOLELY RESPONSIBLE FOR CONSTRUCTION MEANS, TECHNIQUES, SEQUENCES AND PROCEDURES, INCLUDING BRACING, SHORING, LAYDOWN AND PROTECTION OF CONSTRUCTION MATERIALS, ETC. TEMPORARY SHORING AND BRACING SHALL BE THE RESPONSIBILITY OF THE CONTRACTOR.
10. FOR PROPER FIELD INSTALLATION OF THE BUILDING IT IS RECOMMENDED THAT ELECTRIC WIRING, IF REQUIRED, BE RUN THROUGH THE STRUCTURAL MEMBERS BEFORE THE BUILDING IS ERECTED.
11. MAKING HOLES, CUTS OR MODIFICATIONS TO THE STRUCTURAL STEEL MEMBERS IS NOT PERMITTED IN THE FIELD WITHOUT SPECIFIC APPROVAL OF POLIGON.

CERTIFICATES:
MIAMI-DADE COUNTY CERTIFICATE OF COMPETENCY NO. 25-0730.11
FCI (POWDER COATING INSTITUTE) 4000 CERTIFIED

FABRICATOR APPROVALS:
CITY OF PHOENIX, AZ APPROVED FABRICATOR #COB-2010
CITY OF LOS ANGELES, CA APPROVED FABRICATOR #FBD1596
CITY OF RIVERSIDE, CA APPROVED FABRICATOR #SF_000042
CITY OF HOUSTON, TX APPROVED FABRICATOR #470
CLARK COUNTY, NV APPROVED FABRICATOR #264
STATE OF UTAH APPROVED FABRICATOR 02008-14
AISC APPROVED FABRICATOR C-00020910
AWS CERTIFIED WELDING FABRICATOR #240707F

DESIGN CRITERIA:

GENERAL:
2022 CALIFORNIA BUILDING CODE
RISK CATEGORY: II

DEAD LOAD:
ROOF DEAD LOAD: 2 PSF
FRAME DEAD LOAD: SELF WEIGHT

LIVE LOAD:
ROOF LIVE LOAD: 20 PSF

SNOW DESIGN DATA:
GROUND SNOW LOAD (Pg): 0 PSF
FLAT ROOF SNOW LOAD (Pf): 0 PSF
SNOW EXPOSURE FACTOR (Ce): 1.0
SNOW LOAD IMPORTANCE FACTOR (Is): 1.0
THERMAL FACTOR (Ct): 1.2
ROOF SLOPE FACTOR (Cs): 1.0
DRIFT SURCHARGE LOAD (Pd): 0 PSF
WIDTH OF SNOW DRIFT (w): 0 FT
MINIMUM HORIZONTAL SEPARATION DISTANCE (s): 20 FT

WIND DESIGN DATA:
BASIC WIND SPEED (V): 95 MPH
ALLOWABLE STRESS DESIGN WIND SPEED (Vasd): 74 MPH
GUST EFFECT FACTOR (G): 0.85
INTERNAL PRESSURE COEFFICIENT (GCpi): 0
WIND EXPOSURE: C

SEISMIC DESIGN DATA:
STEEL ORDINARY CANTILEVER COLUMN SYSTEMS
SEISMIC IMPORTANCE FACTOR (Ie): 1.0
SEISMIC DESIGN CATEGORY: D
SEISMIC SITE CLASS: D
SHORT SPECTRAL RESPONSE (Ss): 0.45
1-SEC SPECTRAL RESPONSE (S1): 0.22
DESIGN SHORT SPECTRAL RESPONSE (SDS): 0.43
DESIGN 1-SEC SPECTRAL RESPONSE (SD1): 0.48
SEISMIC RESPONSE COEFFICIENT (Cs): 0.34
RESPONSE MODIFICATION COEFFICIENT (R): 1.25
EQUIVALENT LATERAL FORCE PROCEDURE
SEE CALCULATIONS FOR ADDITIONAL DATA

ADDITIONAL CRITERIA:
NONE

Christopher Evans
2025.12.16 17:22:43-05'00'

IF THESE DRAWINGS ARE SEALED, THE SEAL APPLIES ONLY TO BUILDING COMPONENTS DETAILED WITHIN THESE DRAWINGS AND SUPPLIED BY PORTER CORP AS WELL AS THE FOUNDATION DESIGN, IF APPLICABLE.

poligon® www.poligon.com MAIL: (616) 888-3500 FIELD SUPPORT: (616) 888-3566 by PORTER CORP

PRELIM. 12/16/2025 | SCALE: 1:60 | DRAWN BY: cmartinez.castillo | REVISION: A | CREATION DATE: 4/4/2016 | ORDER NO.: 84248 | CAD FILE(S): P22812-84248

PROJECT: 25-8118_CO-6 | PROJECT LOCATION: ROSEVILLE, CA | DRAWING: COVER SHEET | SHEET: CS

1 / 8.4 SHADE SHELTER COVER SHEET
N.T.S.

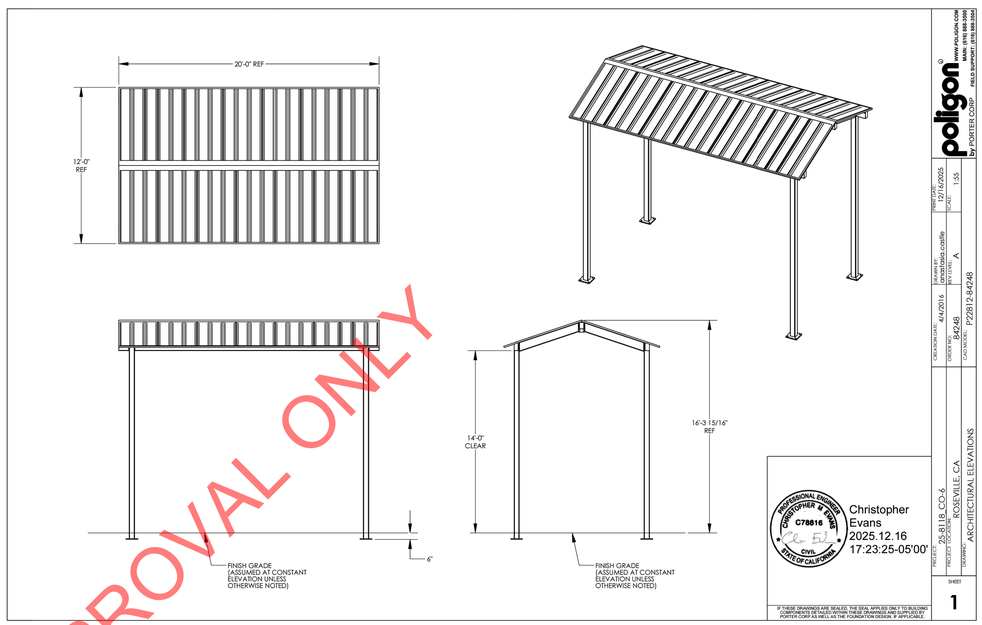

Christopher Evans
2025.12.16 17:23:25-05'00'

poligon® www.poligon.com MAIL: (616) 888-3500 FIELD SUPPORT: (616) 888-3566 by PORTER CORP

PRELIM. 12/16/2025 | SCALE: 1:55 | DRAWN BY: cmartinez.castillo | REVISION: A | CREATION DATE: 4/4/2016 | ORDER NO.: 84248 | CAD FILE(S): P22812-84248

PROJECT: 25-8118_CO-6 | PROJECT LOCATION: ROSEVILLE, CA | DRAWING: ARCHITECTURAL ELEVATIONS | SHEET: 1

2 / 8.4 SHADE SHELTER ELEVATION VIEWS
N.T.S.

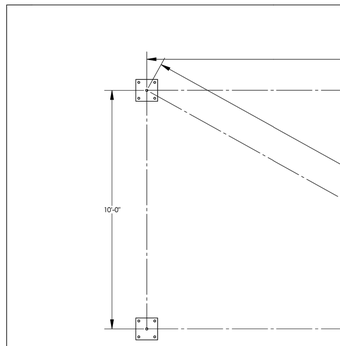

ANCHOR AND FOOTING LAYOUT NOTES:
1. ANCHORS MUST BE CENTERED IN FOOTINGS
2. FOOTINGS MUST BE TURNED TO ALIGN WITH COLUMN AND TRUSS CENTERLINE.

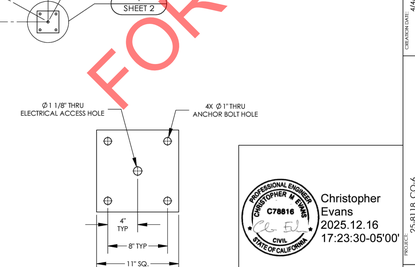

Christopher Evans
2025.12.16 17:23:30-05'00'

IF THESE DRAWINGS ARE SEALED, THE SEAL APPLIES ONLY TO BUILDING COMPONENTS DETAILED WITHIN THESE DRAWINGS AND SUPPLIED BY PORTER CORP AS WELL AS THE FOUNDATION DESIGN, IF APPLICABLE.

poligon® www.poligon.com MAIL: (616) 888-3500 FIELD SUPPORT: (616) 888-3566 by PORTER CORP

PRELIM. 12/16/2025 | SCALE: 1:30 | DRAWN BY: cmartinez.castillo | REVISION: A | CREATION DATE: 4/4/2016 | ORDER NO.: 84248 | CAD FILE(S): P22812-84248

PROJECT: 25-8118_CO-6 | PROJECT LOCATION: ROSEVILLE, CA | DRAWING: ANCHOR AND FOOTING LAYOUT | SHEET: 2

3 / 8.4 SHADE SHELTER ANCHOR AND FOOTING LAYOUT
N.T.S.

DETAIL-FILE

ANCHOR BOLT NOTES - EXTERNAL (ANCHOR BOLTS LOCATED OUTSIDE COLUMN):
1. ANCHOR RODS TO BE ASTM F1554 GRADE 55 TYPE S1 WITH "UNC" CLASS 2A THREADS, HEAVY HEX NUTS AND STANDARD CUT WASHERS, UNLESS OTHERWISE NOTED.
2. ANCHOR BOLTS SHALL BE EITHER "HEADED" OR "THREADED WITH NUT" AS DEFINED IN THE AMERICAN INSTITUTE OF STEEL CONSTRUCTION MANUAL.
3. HOOKED ANCHOR BOLTS ARE NOT ACCEPTABLE.
4. ACCURATE ANCHOR BOLT PLACEMENT IS CRITICAL. TO ENSURE THE ANCHOR BOLT LAYOUT MEETS THE DIMENSIONS REQUIRED ON THE DRAWINGS, SURVEY (OR MEASURE) THE LOCATION OF ALL ANCHOR BOLTS PRIOR TO POURING THE FOOTINGS. AN ADDITIONAL SURVEY (OR MEASUREMENT) SHOULD BE MADE AFTER THE FOOTINGS ARE POURED TO CONFIRM THE ANCHOR BOLTS DID NOT SHIFT DURING THE CONCRETE POUR.
5. THE MANUFACTURER STRONGLY RECOMMENDS USING ANCHOR BOLT TEMPLATES BECAUSE THEY SIGNIFICANTLY IMPROVE THE ACCURACY OF ANCHOR BOLT PLACEMENT. AN ANCHOR BOLT TEMPLATE IS PROVIDED WITH ANY ANCHOR BOLT KIT PURCHASED.
6. IF OUTSIDE CONSULTING ENGINEERS ARE DESIGNING THE FOUNDATIONS FOR THIS STRUCTURE, THEY MUST REFER TO THE MANUFACTURER'S CALCULATIONS FOR MINIMUM CONCRETE PROPERTIES (COMPRESSIVE STRENGTH, EDGE DISTANCE, ETC.) REQUIRED FOR THE ANCHOR BOLT DESIGN.
7. ELECTRICAL ACCESS HOLE IS ALWAYS LOCATED IN THE COLUMN BASE PLATE AS SHOWN. TEMPLATE MUST BE REMOVED BEFORE INSTALLING COLUMNS.
8. GROUT UNDER BASEPLATES SHALL BE NON-METALLIC, NON-SHRINK GROUT WITH MINIMUM f'c=6500 PSI.
9. THE CALCULATIONS FOR THIS STRUCTURE ASSUME A FIXED COLUMN BASE.
10. THE FOLLOWING ADHESIVE ANCHORS MAY BE SUBSTITUTED FOR THE CAST-IN-PLACE ANCHOR BOLTS:
-HILTI HIT-HY 200 (A OR R) V3 ADHESIVE WITH Ø 3/4" HAS-E ROD WITH 11" EFFECTIVE EMBEDMENT.
CONTRACTOR SHALL FOLLOW ALL INSTALLATION SPECIFICATIONS AND REQUIREMENTS OF ANCHOR MANUFACTURER.

CONCRETE NOTES:
1. ALL CONCRETE CONSTRUCTION SHALL CONFORM TO THE CURRENT "ACI MANUAL OF CONCRETE PRACTICE".
2. PORTLAND CEMENT SHALL CONFORM TO ASTM C-150 TYPE I OR TYPE V.
3. IT IS THE CONTRACTOR'S RESPONSIBILITY TO VERIFY THE CONCRETE MIX DESIGN MEETS THE "ACI MANUAL OF CONCRETE PRACTICE' REQUIREMENTS FOR CONCRETE BY EXPOSURE CLASS.
4. THE USE OF CHLORIDE ACCELERATORS IS NOT PERMITTED.
5. COARSE AGGREGATE SHALL BE #57 OR LARGER.
6. CONCRETE AT PLACEMENT SHALL HAVE A SLUMP OF 4" +/- 1".
7. MINIMUM CONCRETE COMPRESSIVE STRENGTH AT 28 DAYS: 4500 PSI.
8. REINFORCING STEEL SHALL BE DEFORMED STEEL CONFORMING TO THE REQUIREMENTS OF ASTM A615 (DEFORMATIONS SHALL BE IN ACCORDANCE WITH ASTM A305) AS FOLLOWS:
GRADE 60: #4 BARS AND LARGER
GRADE 40: #3 BARS
9. PRIOR TO PLACING OF CONCRETE, REINFORCING STEEL AND EMBEDDED ITEMS SHALL BE WELL SECURED IN POSITION.
10. MAINTAIN 3" CONCRETE COVERAGE TO FACE OF BARS UNLESS OTHERWISE NOTED.
11. BARS SHALL BE CLEAN OF RUST, GREASE OR OTHER MATERIAL LIKELY TO IMPAIR BOND. BENDS SHALL BE MADE COLD.
12. WELDING OF REINFORCEMENT IS NOT ALLOWED.
13. ALL EXPOSED EXTERNAL CORNER OF FOUNDATIONS TO BE CHAMFERED BY 3/4" BY 45 DEGREES UNLESS NOTED OTHERWISE.
14. ALL NEW CONCRETE SHALL BE CURED IMMEDIATELY AFTER FINISHING OF REMOVING FORMWORK. CURING SHALL BE EITHER A MOIST CURE METHOD OR THE USE OF A CURING COMPOUND.

FOUNDATION NOTES:
1. FOUNDATIONS SHALL BEAR ON COMPETENT, UNDISTURBED SOIL OR 95% COMPACTED FILL. IF SIGNS OF ORGANIC MATERIAL, UNCONTROLLED FILL, CLAY OR SILT, HIGH WATER TABLE OR OTHER POSSIBLE DETRIMENTAL CONDITIONS ARE FOUND, CONSTRUCTION OF THE FOUNDATIONS MUST BE STOPPED AND A GEOTECHNICAL ENGINEER BE CONTACTED.
2. NO FOUNDATIONS SHALL BE PLACED INTO OR ADJACENT TO SUBGRADE CONTAINING WATER, ICE, FROST, ORGANIC OR LOOSE MATERIAL.
3. WATER SHALL NOT BE PERMITTED TO ACCUMULATE IN FOUNDATION EXCAVATIONS.
4. IT IS THE CONTRACTOR'S RESPONSIBILITY TO VERIFY THE LOCAL FROST DEPTH REQUIREMENT PRIOR TO CONSTRUCTION.
5. IF FOUNDATIONS SHOWN DO NOT MEET LOCAL FROST DEPTH REQUIREMENTS, EXTEND THE DRILLED PIER FOUNDATION AS REQUIRED, EXTENDING THE VERTICAL BARS AND PROVIDING ADDITIONAL TIES TO MEET SPACING REQUIREMENTS AS SHOWN. IF FROST DEPTH REQUIREMENTS ARE NOT MET, AND NO DRILLED PIER DESIGN IS PROVIDED, CONTACT POLIGON.
6. ALLOWABLE SOIL PRESSURES (AS APPLICABLE):

SPREAD PAD	
VERTICAL BEARING	2000 PSF
LATERAL PASSIVE RESISTANCE	300 PSF/FT
LATERAL COEFF. FRICTION	0.3

THE FOUNDATION DESIGN CONTAINED HEREIN IS SITE SPECIFIC, AND IS BASED ON GEOTECHNICAL INVESTIGATION, CITY OF ROSEVILLE CO-61 PARK 6000 CAMPUS PARKWAY ROSEVILLE, CALIFORNIA, BY GEOCON CONSULTANTS, INC. , DATED 11-5-2025, REPORT NO. S31-34-05-01.
PROPER CARE MUST BE TAKEN TO ENSURE ANY AND ALL RECOMMENDATIONS, OF THE ABOVE-MENTIONED REPORT, FOR SITE PREPARATION, SOIL PERFORMANCE AND FOUNDATION DESIGN ARE MET. IF CONDITIONS ARE PRESENT THAT DO NOT ALLOW FOR THESE RECOMMENDATIONS TO BE MET, THE GEOTECHNICAL ENGINEER MUST BE CONTACTED.

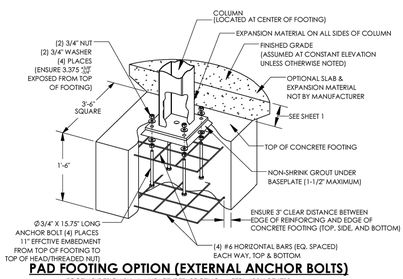

PAD FOOTING OPTION (EXTERNAL ANCHOR BOLTS)
FOOTING DESIGN BY MANUFACTURER. FOOTING MATERIALS BY OTHERS.
(TYPICAL WITH EACH COLUMN, QTY OF REINFORCING AND ANCHOR BOLTS SPECIFIED IN NOTES REFLECT SITE SPECIFIC REQUIREMENTS)

Christopher Evans
2025.12.16 17:23:37-05'00'

IF THESE DRAWINGS ARE SEALED, THE SEAL APPLIES ONLY TO BUILDING COMPONENTS DETAILED WITHIN THESE DRAWINGS AND SUPPLIED BY PORTER CORP AS WELL AS THE FOUNDATION DESIGN, IF APPLICABLE.

poligon® www.poligon.com MAIL: (616) 888-3500 FIELD SUPPORT: (616) 888-3566 by PORTER CORP

PRELIM. 12/16/2025 | SCALE: 1:1 | DRAWN BY: cmartinez.castillo | REVISION: A | CREATION DATE: 4/4/2016 | ORDER NO.: 84248 | CAD FILE(S): P22812-84248

PROJECT: 25-8118_CO-6 | PROJECT LOCATION: ROSEVILLE, CA | DRAWING: ANCHOR AND FOOTING DETAILS | SHEET: 2.1

4 / 8.4 SHADE SHELTER ANCHOR AND FOOTING DETAILS
N.T.S.

FOR COUNCIL APPROVAL ONLY

CALA
12150 Tributary Point Drive, Suite 140
Gold River, CA 95670
T 916.985.4366
www.calalanderassociates.com

REVISION	DATE

LICENSED LANDSCAPE ARCHITECT — Signature — May 31, 2027 Renewal Date — Date — STATE OF CALIFORNIA

CO-61 PARK
5125 ASHBROOK ST,
ROSEVILLE, CA 95747

SUBMITTAL	DATE
30% Submittal	09/30/25
99% Submittal	11/18/25
100% Submittal	02/09/26

PROJECT NO: 25034
DRAWN BY: CM/DS
CHECKED BY: BW
SCALE: As Shown

SHEET TITLE
LANDSCAPE DETAILS

SHEET
8.4
20 OF 28

811 Know what's below. Call before you dig.

File Path: T:\Projects\2025\25034.CM\Work\3_Construction\Documents\25034_DT.dwg Plot Date: 2/10/26 Saved By: Cma
Copyright © 2020 Calander Associates Landscape Architecture, Inc.

ADD ALTERNATE #3

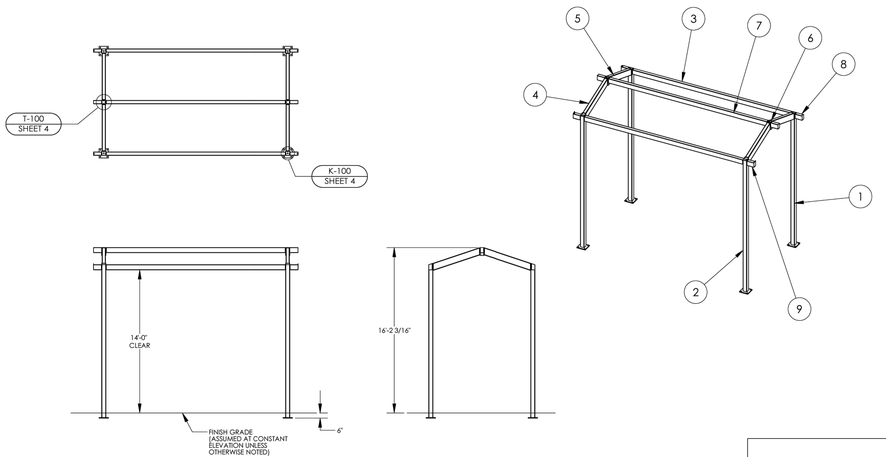

ITEM	QTY.	PART NO.	DESCRIPTION	MATERIAL SIZE	WEIGHT
9	2	-	TMEM TAIL 2 ASM	HSS6"X4"X1/8"	9.59
8	2	-	TMEM TAIL 1 ASM	HSS6"X4"X1/8"	9.59
7	1	-	RIDGE ASM	HSS6"X4"X1/8"	148.20
6	2	-	CTUBE ASM	HSS5"X5"X1/2"	27.92
5	2	-	TRUSS 2 ASM	HSS8"X4"X3/16"	76.33
4	2	-	TRUSS 1 ASM	HSS8"X4"X3/16"	76.33
3	2	-	TMEM ASM	HSS6"X4"X1/8"	146.68
2	2	-	COL 2 ASM	HSS5"X5"X3/16"	203.05
1	2	-	COL 1 ASM	HSS5"X5"X3/16"	203.07

Christopher Evans
2025.12.16 17:23:43-05'00'

IF THESE DRAWINGS ARE SEALED, THE SEAL APPLIED ONLY TO BUILDING COMPONENTS DETAILED WITHIN THESE DRAWINGS AND SUPPLIED BY PORTER CORP. AS WELL AS THE FOUNDATION DESIGN, IF APPLICABLE.

poligon © 2025 BY PORTER CORP. MAIN: (916) 888-3300 FIELD SUPPORT: (916) 888-3300

PROJECT DATE 12/16/2025 | SCALE: 1/20 | DESIGNED BY: Jonathan Castle | REVISIONS BY STATE: A | DRAWN BY: CM/DS | CHECKED BY: BW | CAD FILE(S): P228128424B | ORDER #: 84248 | CREATION DATE: 4/4/2016

PROJECT: 25-8118_CO-6 ROSEVILLE, CA | DRAWING: STRUCTURAL FRAMING PLAN | SHEET 3

1 / 8.5 SHADE SHELTER STRUCTURAL FRAMING PLAN
N.T.S.

NOTE:
SEE UC-100 FOR U-CLIP INSTALLATION

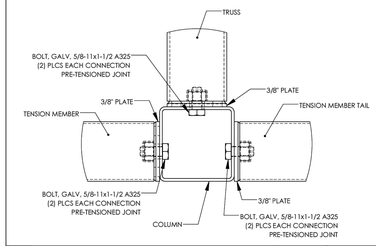

COLUMN CONNECTIONS | K-100

NOTE:
COVER PLATE (XXXXX)
W/ FASTENER (XXXXX)
ATTACHED AT BOTTOM OF CONNECTION

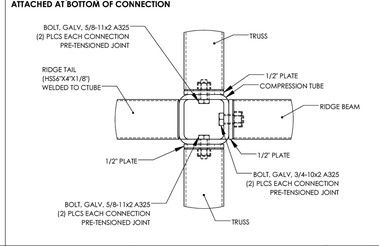

COMPRESSION MEMBER CONNECTION | T-100

TURN-OF-NUT PRETENSIONING METHOD:
THESE STEPS ILLUSTRATE THE REQUIREMENTS OUTLINED IN THE AISC SPECIFICATION. THE ROTATION INDICATED IS ACCURATE FOR MOST BOLT DIAMETERS AND LENGTHS BUT IT IS THE RESPONSIBILITY OF THE INSTALLER TO MEET AISC REQUIREMENTS.

STEP ONE:
AFTER SNUG TIGHT,
MATCH MARK PLATE



STEP TWO:
THEN TURN BOLT/NUT PAST
SNUG TIGHT 1/3 TURN

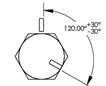

CONNECTION NOTES:
1. ALL BOLTS SHOWN ON THESE DRAWINGS ARE ASTM F3125 (A325 TYPE 1) HIGH STRENGTH BOLTS (UNO) AND SHALL BE HOT DIPPED GALVANIZED PER ASTM F2329.
2. HIGH STRENGTH NUTS SHALL CONFORM TO ASTM A563 AND SHALL BE GALVANIZED PER ASTM F2329.
3. HIGH STRENGTH WASHERS SHALL CONFORM TO ASTM F436 AND SHALL BE GALVANIZED PER ASTM F2329.
4. UNLESS A SNUG-TIGHT JOINT IS PERMITTED IN THE CONNECTION DETAIL, ALL BOLTS ARE TO BE INSTALLED BY ONE OF THE FOLLOWING PRETENSIONING METHODS AS SPECIFIED IN THE AISC "SPECIFICATION FOR STRUCTURAL JOINTS USING HIGH-STRENGTH BOLTS", SECTION 8:
   A. TURN-OF-NUT PRETENSIONING
5. THE SNUG-TIGHT CONDITION IS THE TIGHTNESS THAT IS ATTAINED WITH A FEW IMPACTS OF AN IMPACT WRENCH OR THE FULL EFFORT OF AN IRONWORKER USING AN ORDINARY SPUD WRENCH TO BRING THE CONNECTED PLIES INTO FIRM CONTACT.
6. ANCHOR BOLTS NEED NOT BE TIGHTENED PAST SNUG-TIGHT.
7. WHEN INSTALLING BOLTS REFER TO SECTIONS 8.1 AND 8.2 OF THE "SPECIFICATION FOR STRUCTURAL JOINTS USING HIGH-STRENGTH BOLTS" FOR GUIDANCE.
8. LOCAL JURISDICTIONS MAY REQUIRE AN INSPECTOR TO BE PRESENT TO WITNESS HARDWARE INSTALLATION AND INDEPENDENT TESTING. INSPECTION REQUIREMENTS SHOULD BE VERIFIED BY INSTALLER PRIOR TO STEEL ERECTION.
9. ERECTION OF THE FRAMING MEMBERS WILL REQUIRE THE MAIN COLUMNS TO BE PLUMB SQUARE AND TIGHTENED TO THE TRUSSES AND/OR TENSION MEMBERS BEFORE INSTALLING THE PURLINS. PURLINS, IF REQUIRED, MUST BE AS SHOWN IN FRAMING PLAN.
10. TEMPORARY SHORING OR BRACING SHALL BE USED TO COMPACT THE JOINTS UNTIL THE CONNECTED PLIES ARE IN FIRM CONTACT PRIOR TO PRETENSIONING.
11. ALL BOLTS MUST BE LUBRICATED WITH WAX TO ASSIST IN PROPER TIGHTENING. TO LUBRICATE A BOLT IN THE FIELD, APPLY THE WAX STICK DOWN THE LENGTH OF THE BOLT'S THREADS.
12. TO PREVENT RUST STAINING OF FINISH, ALL METAL SHAVINGS MUST BE REMOVED AFTER INSTALLATION. ENSURE NO SHAVING ARE TRAPPED BETWEEN MATING SURFACES.
13. TOUCH-UP PAINT MUST BE APPLIED TO ALL EXPOSED FASTENERS. PERIODIC TOUCH-UP AT THESE CONNECTIONS IS REQUIRED.
14. ENSURE FRAME MEMBERS WITH DRAIN HOLES NEAR THE ENDS OF TUBES ARE INSTALLED FACING UP UNLESS SPECIFIED IN THE FRAME CONNECTION DETAILS.

Christopher Evans
2025.12.16 17:23:49-05'00'

IF THESE DRAWINGS ARE SEALED, THE SEAL APPLIED ONLY TO BUILDING COMPONENTS DETAILED WITHIN THESE DRAWINGS AND SUPPLIED BY PORTER CORP. AS WELL AS THE FOUNDATION DESIGN, IF APPLICABLE.

poligon © 2025 BY PORTER CORP. MAIN: (916) 888-3300 FIELD SUPPORT: (916) 888-3300

PROJECT DATE 12/16/2025 | SCALE: 1/4 | DESIGNED BY: Jonathan Castle | REVISIONS BY STATE: A | DRAWN BY: CM/DS | CHECKED BY: BW | CAD FILE(S): P228128424B | ORDER #: 84248 | CREATION DATE: 4/4/2016

PROJECT: 25-8118_CO-6 ROSEVILLE, CA | DRAWING: FRAME CONNECTION DETAILS | SHEET 4

2 / 8.5 SHADE SHELTER FRAME CONNECTION DETAILS
N.T.S.

NOTE:
U-CLIP MUST BE ATTACHED TO TENSION MEMBER AS SHOWN PRIOR TO BUILDING ASSEMBLY.

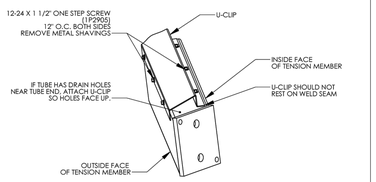

U-CLIP CONNECTION | UC-100

Christopher Evans
2025.12.16 17:23:55-05'00'

IF THESE DRAWINGS ARE SEALED, THE SEAL APPLIED ONLY TO BUILDING COMPONENTS DETAILED WITHIN THESE DRAWINGS AND SUPPLIED BY PORTER CORP. AS WELL AS THE FOUNDATION DESIGN, IF APPLICABLE.

poligon © 2025 BY PORTER CORP. MAIN: (916) 888-3300 FIELD SUPPORT: (916) 888-3300

PROJECT DATE 12/16/2025 | SCALE: 1/4 | DESIGNED BY: Jonathan Castle | REVISIONS BY STATE: A | DRAWN BY: CM/DS | CHECKED BY: BW | CAD FILE(S): P228128424B | ORDER #: 84248 | CREATION DATE: 4/4/2016

PROJECT: 25-8118_CO-6 ROSEVILLE, CA | DRAWING: FRAME CONNECTION DETAILS | SHEET 4.1

3 / 8.5 SHADE SHELTER FRAME CONNECTION DETAILS
N.T.S.

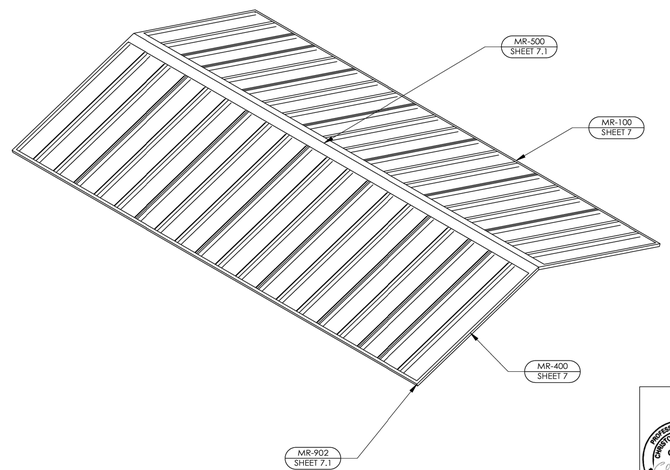

Christopher Evans
2025.12.16 17:24:00-05'00'

IF THESE DRAWINGS ARE SEALED, THE SEAL APPLIED ONLY TO BUILDING COMPONENTS DETAILED WITHIN THESE DRAWINGS AND SUPPLIED BY PORTER CORP. AS WELL AS THE FOUNDATION DESIGN, IF APPLICABLE.

poligon © 2025 BY PORTER CORP. MAIN: (916) 888-3300 FIELD SUPPORT: (916) 888-3300

PROJECT DATE 12/16/2025 | SCALE: 1:25 | DESIGNED BY: Jonathan Castle | REVISIONS BY STATE: A | DRAWN BY: CM/DS | CHECKED BY: BW | CAD FILE(S): P228128424B | ORDER #: 84248 | CREATION DATE: 4/4/2016

PROJECT: 25-8118_CO-6 ROSEVILLE, CA | DRAWING: ROOF OVERVIEW | SHEET 6

4 / 8.5 SHADE SHELTER ROOF OVERVIEW
N.T.S.

FOR COUNCIL APPROVAL ONLY

DETAIL-FILE

CALA
12150 Tributary Point Drive, Suite 140
Gold River, CA 95670
T 916.985.4366
www.callanderassociates.com

REVISION	DATE

LICENSED LANDSCAPE ARCHITECT
Signature
May 31, 2027
Renewal Date
Date
STATE OF CALIFORNIA

CO-61 PARK
5125 ASHBBROOK ST,
ROSEVILLE, CA 95747

SUBMITTAL	DATE
30% Submittal	09/30/25
99% Submittal	11/18/25
100% Submittal	02/09/26

PROJECT NO: 25034
DRAWN BY: CM/DS
CHECKED BY: BW
SCALE: As Shown

SHEET TITLE
LANDSCAPE DETAILS

SHEET
8.5
21 OF 28

Know what's below. Call before you dig.

File Path: T:\Projects\2025\25034.CM\Work\3_Construction\Documents\25034_D1.dwg Plot Date: 2/9/26 Saved By: Cmo
Copyright © 2025 Callander Associates Landscape Architecture, Inc.

ADD ALTERNATE #3

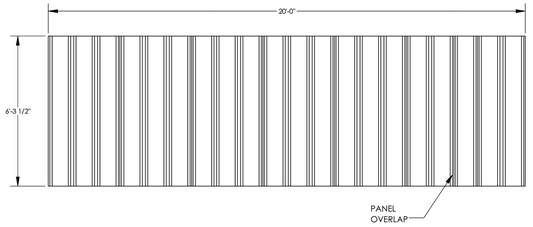

MULTI-RIB NOTES:

1. THE DETAILS SHOWN ARE SUGGESTIONS OR GUIDELINES ON HOW TO ERECT THE SYSTEMS. THE INFORMATION SHOWN IS ACCURATE, BUT IT IS NOT INTENDED TO COVER ALL INSTANCES. BUILDING REQUIREMENTS, DESIGNS OR CODES. THE DETAILS MAY REQUIRE CHANGES OR REVISIONS DUE TO FIELD CONDITIONS.
2. IT SHALL BE THE RESPONSIBILITY OF THE ERECTOR TO ENSURE THAT THE DETAILS MEET PARTICULAR BUILDING REQUIREMENTS AND TO ASSURE ADEQUATE WATER TIGHTNESS.
3. THE ERECTOR SHOULD THOROUGHLY FAMILIARIZE HIMSELF/HERSELF WITH ALL ERECTION INSTRUCTIONS BEFORE STARTING WORK.
4. THE PANELS SHOULD BE INSTALLED PLUMB, STRAIGHT, AND ACCURATELY TO THE ADJACENT WORK.
5. FLASHING AND TRIM SHALL BE INSTALLED TRUE, AND IN PROPER ALIGNMENT, WITH ANY EXPOSED FASTENERS EQUALLY SPACED FOR THE BEST APPEARANCE.
6. SEALANT SHALL BE FIELD APPLIED ON DRY, CLEAN SURFACES. SOME FIELD CUTTING AND FITTING OF PANELS AND FLASHING IS TO BE EXPECTED BY THE ERECTOR AND MINOR FIELD CORRECTIONS ARE A PART OF NORMAL ERECTION WORK.
7. WORKMANSHIP SHALL BE OF THE BEST INDUSTRY STANDARDS AND INSTALLATION SHALL BE PERFORMED BY EXPERIENCED METAL CRAFTSMEN.
8. METAL SHAVINGS FROM DRILLING OR INSTALLATION OF ROOF FASTENERS MUST BE CAREFULLY REMOVED FROM THE ROOF BY BRUSHING OR SWEEPING AT THE END OF EACH DAY DURING INSTALLATION. SHAVINGS LEFT ON THE ROOF WILL QUICKLY RUST AND STAIN THE ROOF FINISH.

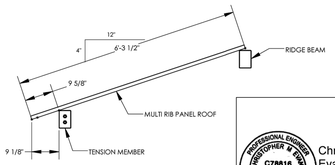

PROFESSIONAL ENGINEER CHRISTOPHER M. EVANS C78816 CIVIL STATE OF CALIFORNIA

Christopher Evans
2025.12.16 17:24:06-05'00'

IF THESE DRAWINGS ARE SEALED, THE SEAL APPLIES ONLY TO BUILDING COMPONENTS DETAILED WITHIN THESE DRAWINGS AND SUPPLIED BY PORTER CORP AS WELL AS THE FOUNDATION DESIGN, IF APPLICABLE.

poligon® by PORTER CORP — www.poligon.com — MAIN: (916) 888-3000 — FIELD SUPPORT: (818) 888-3564

DRAWING DATE: 12/16/2025 | SCALE: 1/2in | DRAWN BY: CM/DS | CHECKED BY: BW | REVISIONS: A | ORDER NO: 84248 | CAD MASTER: P228I12-84248

PROJECT: 25.8118_CO-6 | PROJECT LOCATION: ROSEVILLE, CA | DRAWING: ROOF LAYOUT

SHEET **6.1**

1 / 8.6 SHADE SHELTER ROOF LAYOUT
N.T.S.

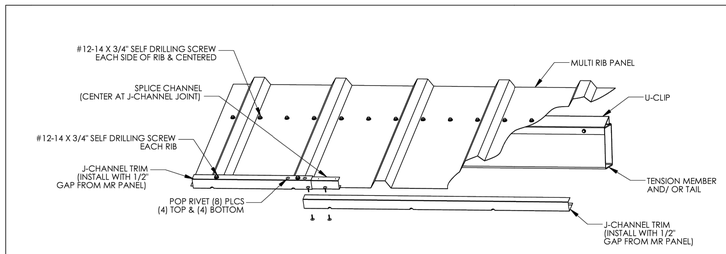

2024A — EAVE DETAIL — MR-100

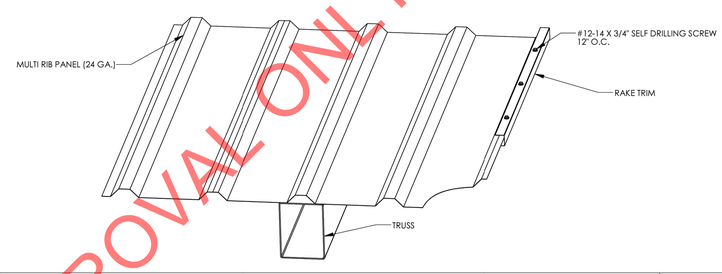

2022A — RAKE DETAIL — MR-400

PART DESCRIPTIONS:

#12-14x3/4" SELF DRILLING SCREW.

#12-24x1 1/4" SELF DRILLING SCREW.

1/8" POP RIVET.

PROFESSIONAL ENGINEER CHRISTOPHER M. EVANS C78816 CIVIL STATE OF CALIFORNIA

Christopher Evans
2025.12.16 17:24:13-05'00'

IF THESE DRAWINGS ARE SEALED, THE SEAL APPLIES ONLY TO BUILDING COMPONENTS DETAILED WITHIN THESE DRAWINGS AND SUPPLIED BY PORTER CORP AS WELL AS THE FOUNDATION DESIGN, IF APPLICABLE.

poligon® by PORTER CORP — www.poligon.com — MAIN: (916) 888-3000 — FIELD SUPPORT: (818) 888-3564

DRAWING DATE: 12/16/2025 | SCALE: NTS | DRAWN BY: CM/DS | CHECKED BY: BW | REVISIONS: A | ORDER NO: 84248 | CAD MASTER: P228I12-84248

PROJECT: 25.8118_CO-6 | PROJECT LOCATION: ROSEVILLE, CA | DRAWING: ROOF CONNECTION DETAILS

SHEET **7**

2 / 8.6 SHADE SHELTER ROOF CONNECTION DETAILS
N.T.S.

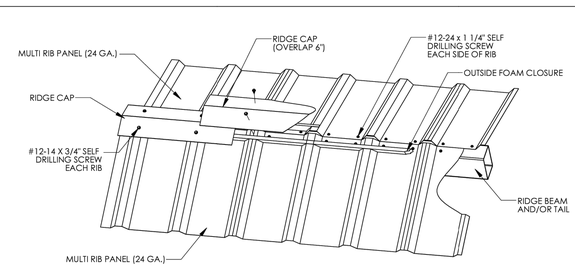

2023A — RIDGE DETAIL — MR-500

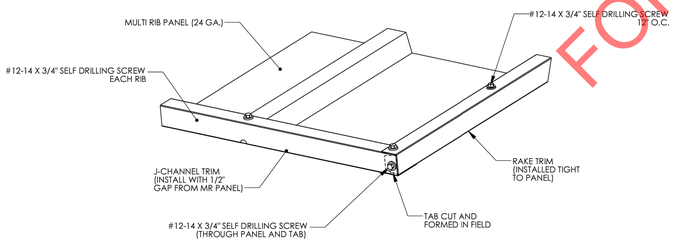

2023A — CORNER DETAIL — MR-902

PROFESSIONAL ENGINEER CHRISTOPHER M. EVANS C78816 CIVIL STATE OF CALIFORNIA

Christopher Evans
2025.12.16 17:24:19-05'00'

IF THESE DRAWINGS ARE SEALED, THE SEAL APPLIES ONLY TO BUILDING COMPONENTS DETAILED WITHIN THESE DRAWINGS AND SUPPLIED BY PORTER CORP AS WELL AS THE FOUNDATION DESIGN, IF APPLICABLE.

poligon® by PORTER CORP — www.poligon.com — MAIN: (916) 888-3000 — FIELD SUPPORT: (818) 888-3564

DRAWING DATE: 12/16/2025 | SCALE: NTS | DRAWN BY: CM/DS | CHECKED BY: BW | REVISIONS: A | ORDER NO: 84248 | CAD MASTER: P228I12-84248

PROJECT: 25.8118_CO-6 | PROJECT LOCATION: ROSEVILLE, CA | DRAWING: ROOF CONNECTION DETAILS

SHEET **7.1**

3 / 8.6 SHADE SHELTER ROOF CONNECTION DETAILS
N.T.S.

DETAIL-FILE

FOR COUNCIL APPROVAL ONLY

CALA
12150 Tributary Point Drive, Suite 140
Gold River, CA 95670
T 916.985.4366
www.callanderassociates.com

REVISION	DATE

LICENSED LANDSCAPE ARCHITECT — Signature — May 31, 2027 Renewal Date — Date — STATE OF CALIFORNIA

CO-61 PARK
5125 ASHBBROOK ST,
ROSEVILLE, CA 95747

SUBMITTAL	DATE
30% Submittal	09/30/25
99% Submittal	11/18/25
100% Submittal	02/09/26

PROJECT NO: 25034
DRAWN BY: CM/DS
CHECKED BY: BW
SCALE: As Shown

SHEET TITLE
LANDSCAPE DETAILS

SHEET
8.6
22 OF 28

Know what's below. Call before you dig.

File Path: T:\Projects\2025\25034.CO-61Park\13_Construction\Documents\25034_01.dwg Plot Date: 2/9/26 Saved By: Cmo
Copyright © 2025 Callander Associates Landscape Architecture, Inc.

ABBREVIATIONS

A	AMPERES
AC	ALTERNATING CURRENT
A.F.F.	ABOVE FINISHED FLOOR
A.I.C.	AMPERE INTERRUPTING CAPACITY
AMP	AMPERE
AWG	AMERICAN WIRE GAUGE
BKR	BREAKER
C.	CONDUIT
C.B.	CIRCUIT BREAKER
CD	CANDELA
CKT	CIRCUIT
C.O.	CONDUIT ONLY, WITH PULL WIRE
C.T.	CURRENT TRANSFORMER
DC	DIRECT CURRENT
(E)	EXISTING
EL	EVENING LIGHT
EM	EMERGENCY
(ER)	EXISTING RELOCATED
EMT	ELECTRICAL METALLIC CONDUIT
(F)	FUTURE
FACP	FIRE ALARM CONTROL PANEL
FAPS	FIRE ALARM POWER SUPPLY
FATC	FIRE ALARM TERMINAL CABINET
GA.	GAUGE
GND	GROUND
GFCI	GROUND FAULT CIRCUIT INTERRUPTER
HP	HORSEPOWER
HVAC	HEATING, VENTILATING AND AIR CONDITIONING
HZ.	HERTZ (CYCLES/SEC)
Isc	SHORT CIRCUIT AMPERES
ISO	ISOLATED
K	THOUSAND
KV	KILO VOLT
KVA	KILO VOLT AMPERE
KW	KILO WATT
KWH	KILO WATT HOUR
LT.	LIGHT
LV	LOW VOLTAGE
MAX.	MAXIMUM
MDF	MAIN DISTRIBUTION FRAME
MFR.	MANUFACTURER
MIN.	MINIMUM
MTD.	MOUNTED
N	NEUTRAL
(N)	NEW
NEMA	NATIONAL ELECTRICAL MANUFACTURERS ASSOCIATION
N.I.C.	NOT IN CONTRACT
NL	NIGHT LIGHT
NM	NON-METALLIC CABLE
PFB	PROVISIONS FOR FUTURE CIRCUIT BREAKER
PH	PHASE
(R)	REMOVE
(RE)	RELOCATE EXISTING
RCPT.	RECEPTACLE
S.M.S	SHEET METAL SCREW
SWBD	SWITCHBOARD
SYS	SYSTEM
TV	TELEVISION
TYP.	TYPICAL
UG	UNDERGROUND
UL	UNDERWRITERS LABORATORY
UON	UNLESS OTHERWISE NOTED
V	VOLT
VA	VOLT-AMPERES
W	WIRE, WATT
WP	WEATHER PROTECTED
XFMR	TRANSFORMER

LUMINAIRE SCHEDULE

TYPE	MANUFACTURER / CATALOG NO.	VOLTAGE / DESCRIPTION	LIGHT SOURCE (LED, WATTS, LUMENS, COLOR TEMPERATURE, CRI, R9 IF AVAILABLE)	MOUNTING	REMARK NOTE No.
A	HADCO RL54 B B N N 1 A W N N N A 2 N N N N SP1	120-277 VOLT LED POST TOP LIGHT	LED, 39W, 4985L, 4000K°, 75CRI	POLE MOUNT	
POLE	WHATLEY TR34 16 DE BLK TXT 30-30	16FT ROUND, TAPERED POLE			

GENERAL NOTE:

REFER TO CITY OR ROSEVILLE PARKS, RECREATION, AND LIBRARIES DEPARTMENT TECHNICAL SPECIFICATIONS

ELECTRICAL SYMBOL LIST

- POST TOP LUMINAIRE, WITH POLE AND BASE
- BOOSTER PUMP
- EQUIPMENT DISCONNECT SWITCH - EXTERNALLY OPERATED, NON-FUSIBLE
- CONDUIT RUN UNDERFLOOR OR UNDERGROUND MINIMUM 1" DIAMETER.
- PB# — ELECTRICAL PULL BOX. "PB#" INDICATES SIZE CORRESPONDING TO PULL BOX SCHEDULE.
- SWITCHBOARD, DISTRIBUTION PANEL, OR MOTOR CONTROL CENTER
- 1 — DRAWING SHEET NUMBERED NOTE DESIGNATION - APPLIES TO NUMBERED NOTE ON SAME SHEET
- 1 / E-1 — DRAWING PLAN OR DETAIL DESIGNATION - "1" OR "A" DENOTES PLAN OR DETAIL NUMBER, "E-1" DENOTES SHEET NUMBER

SYMBOL LIST NOTES:

1. EXISTING ELECTRICAL EQUIPMENT, OUTLETS, AND DEVICES ARE SHOWN THE SAME AS NEW, EXCEPT LIGHTLY AND ACCOMPANIED BY (E). SUCH ELECTRICAL EQUIPMENT, OUTLETS, AND DEVICES ARE TO REMAIN AS IS, UNLESS OTHERWISE NOTED ON PLAN OR SPECIFICATION.
2. VERIFY ON SITE THAT ALL PANELBOARDS HAVE MINIMUM WORKING SPACES PER CODE AND THAT THE DEDICATED PANELBOARD SPACES ARE CLEAR OF ALL DUCTS, PIPING AND EQUIPMENT FOREIGN TO THE PANEL BOARDS. NOTIFY THE ENGINEER FOR CORRECTIVE ACTION IN THE EVENT THAT FOREIGN OBJECTS IMPEDE THE DEDICATED PANELBOARD AREAS.
3. WHERE CONDUIT STUB IS INDICATED, PROVIDE CONDUIT WITH BUSHING AT THE END OF CONDUIT AND PULL ROPE INTO ACCESSIBLE CEILING AREA.

APPLICABLE CODES AND REGULATIONS

2022	CALIFORNIA BUILDING STANDARDS ADMINISTRATIVE CODE (PART 1, TITLE 24, CALIFORNIA CODE OF REGULATIONS (CCR)).
2022	CALIFORNIA BUILDING CODE (CBC) - PART 2, TITLE 24, CCR, BASED ON THE 2021 INTERNATIONAL BUILDING CODE (IBC).
2022	CALIFORNIA ELECTRICAL CODE (CEC) - PART 3, TITLE 24, CCR, BASED ON THE 2020 NATIONAL ELECTRICAL CODE (NEC).
2022	CALIFORNIA MECHANICAL CODE (CMC) - PART 4, TITLE 24, CCR, BASED ON THE 2021 UNIFORM MECHANICAL CODE (UMC).
2022	CALIFORNIA PLUMBING CODE (CPC) - PART 5, TITLE 24, CCR, BASED ON THE 2021 UNIFORM PLUMBING CODE (UPC).
2022	CALIFORNIA FIRE CODE (CFC) - PART 9, TITLE 24, CCR, BASED ON THE 2021 INTERNATIONAL FIRE CODE (IFC).
2022	CALIFORNIA GREEN BUILDING STANDARDS CODE - PART 11, TITLE 24
2021	N.F.P.A. 101 LIFE SAFETY CODE
2022	N.F.P.A. 72 FIRE ALARM CODE
2022	EDITION TITLE 19, CALIFORNIA CODE OF REGULATIONS, PUBLIC SAFETY, STATE FIRE MARSHAL REGULATIONS.
	TITLE 8, CALIFORNIA CODE OF REGULATIONS, INDUSTRIAL STANDARDS.
	TITLE 22, CALIFORNIA CODE OF REGULATIONS, SOCIAL SECURITY DIVISIONS 5, 7.
	OCCUPATIONAL SAFETY AND HEALTH ACT (OSHA).
	FACTORY MUTUAL SYSTEM (FM) REQUIREMENTS.
	ALL APPLICABLE STATE AND LOCAL CODES AND REGULATIONS

ELECTRICAL SHEET INDEX

No. OF SHEETS	DRAWING No.	DRAWING DESCRIPTIONS
1	E0.1	ELECTRICAL SHEET INDEX, SYMBOL LIST, ABBREVIATIONS, AND GENERAL NOTES
2	E1.1	SITE PLAN - REMODEL - ELECTRICAL
3	E3.1	ONE-LINE POWER DIAGRAM AND PANEL SCHEDULE
4	E4.1	ELECTRICAL DETAILS
5	E5.1	TITLE 24 - OUTDOOR LIGHTING COMPLIANCE FORMS
6	E5.2	TITLE 24 - ELECTRICAL POWER DISTRIBUTION COMPLIANCE FORMS

FOR COUNCIL APPROVAL ONLY

CALA
12150 Tributary Point Drive, Suite 140
Gold River, CA 95670
T 916.985.4366
www.callanderassociates.com

REVISION	DATE

LICENSED PROFESSIONAL ENGINEER — JOHN L. BRODOWSKY — E 24535 — ELECTRICAL — STATE OF CALIFORNIA

02/10/2026

CO-61 PARK

5125 ASHBROOK ST,
ROSEVILLE, CA 95747

SUBMITTAL	DATE
30% Submittal	09/30/25
99% Submittal	11/18/25
100% Submittal	02/09/26

PROJECT NO: 25034
DRAWN BY: KL
CHECKED BY: JLB
SCALE: As Shown

SHEET TITLE

ELECTRICAL SHEET INDEX, SYMBOL LIST, ABBREVIATIONS & GENERAL NOTES

SHEET

E0.1

23 OF 28

811 Know what's below. Call before you dig.

M. NEILS ENGINEERING, INC.
Electrical Engineers | Lighting Designers
100 Howe Ave., Suite 235N
Sacramento, CA 95825-8217
www.mneilsengineering.com
Tel: (916) 923-4400
PROJECT #: 25227.21
PROJECT MGR: SKL/JLB

File Path: \\ANXDC1\Projects\2025 Projects\Callander Associates\25227.21 City of Roseville- CO-61 Park Site\Edrwgs\25227.21_E0.1_SHEET INDEX.dwg Plot Date: 2/9/26 Saved By: tjohn
Copyright © 2026 Callander Associates Landscape Architecture, Inc.

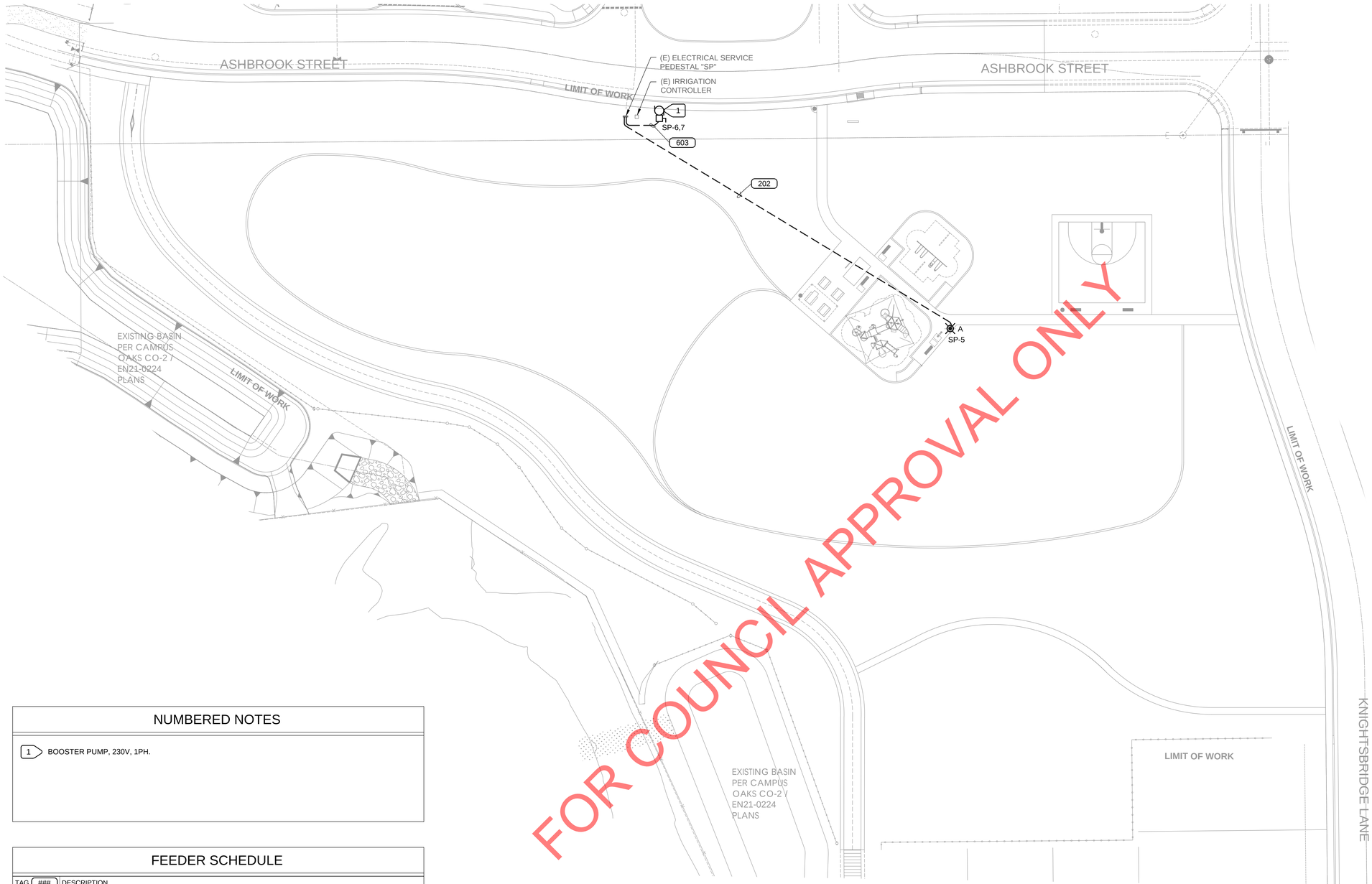

FOR COUNCIL APPROVAL ONLY

NUMBERED NOTES

1. BOOSTER PUMP, 230V, 1PH.

FEEDER SCHEDULE

TAG (###)	DESCRIPTION
202	1" C., 2 #12, AND 1 #12 GND.
603	1-1/4" C., 3 #4, AND 1 #10 GND.

1 / E1.1 SITE PLAN - REMODEL - ELECTRICAL

SCALE: 1"=30'-0"

1"=30'

0 30 60 feet

NORTH

CALA
12150 Tributary Point Drive, Suite 140
Gold River, CA 95670
T 916.985.4366
www.callanderassociates.com

REVISION	DATE

LICENSED PROFESSIONAL ENGINEER JULIA L. BRODOWSKY E 24535 ELECTRICAL STATE OF CALIFORNIA

02/10/2026

CO-61 PARK

5125 ASHBROOK ST,
ROSEVILLE, CA 95747

SUBMITTAL	DATE
30% Submittal	09/30/25
99% Submittal	11/18/25
100% Submittal	02/09/26

PROJECT NO: 25034
DRAWN BY: KL
CHECKED BY: JLB
SCALE: As Shown

SHEET TITLE

SITE PLAN - REMODEL - ELECTRICAL

SHEET

E1.1

24 OF 28

811 Know what's below. Call before you dig.

M. NEILS ENGINEERING, INC.
Electrical Engineers | Lighting Designers
100 Howe Ave., Suite 235N
Sacramento, CA 95825-8217
www.mneilsengineering.com
Tel: (916) 923-4400
PROJECT #: 25227.21
PROJECT MGR: SKL/JLB

File Path: \\MNEDC1\Projects\2025 Projects\Callander Associates\25227.21 City of Roseville- CO-61 Park Site\Edwgs\25227.21_E1.1_SITE PLAN - REMODEL - ELECTRICAL.dwg Plot Date: 2/9/26 Saved By: Bphu
Copyright © 2026 Callander Associates Landscape Architecture, Inc.

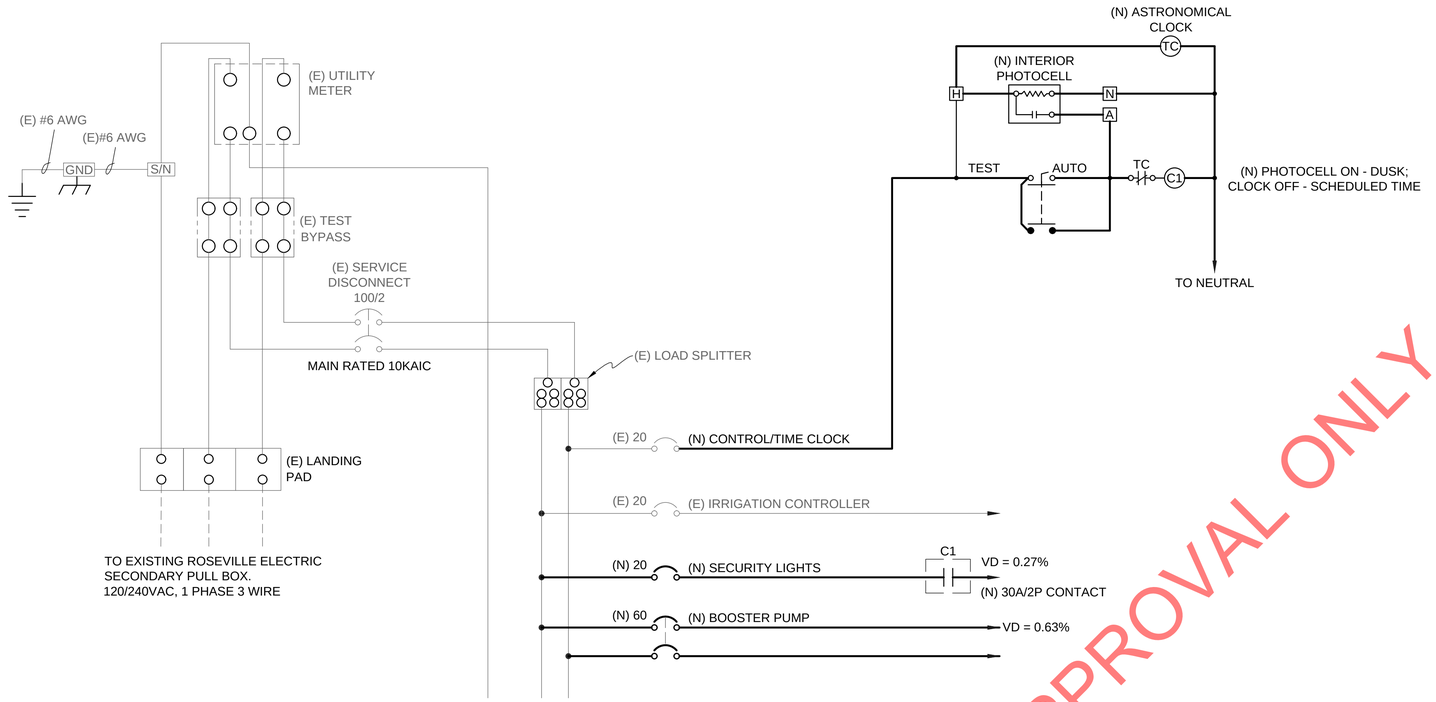

NOTES:

1. PROVIDE CONTACTORS WITH POLE AS SHOWN, 30A RATED.

1 / E3.1 ONE-LINE POWER DIAGRAM

NO SCALE

FOR COUNCIL APPROVAL ONLY

(E) SERVICE PEDESTAL "SP" SCHEDULE

POWER SOURCE: ROSEVILLE ELECTRIC PULL BOX		LOCATION: SITE	
VOLTAGE: 120/240 VOLT, 1 PHASE, 3 WIRE		MAIN BKR: 100A BUS: 100A	MOUNTING: PEDESTAL PANEL TYPE: NEMA 3R REMARKS: 10kAIC

PH	CKT	CB	KVA	LOAD SERVED
A	1	100/2		MAIN BREAKER
B	2			
A	3	20/1	0.18	IRRIGATION CONTROLLER
B	4	20/1 [2]	0.1	CONTROLS
A	5	20/1	0.04	SECURITY LIGHTING [1]
B	6	60/2	4.8	BOOSTER PUMP [1]
A	7		4.8	

NOTES:

[1] INSTALL NEW CIRCUIT BREAKER WITH ALL MOUNTING HARDWARE TO MATCH EXISTING TYPE AND KAIC RATING.

[2] (E) CIRCUIT BREAKER w/ (N) LOAD

CONNECTED LOAD		
PHASE A =	5.0	kVA
PHASE B =	4.9	kVA
TOTAL =	9.9	kVA
TOTAL =	41.3	Amps

			DESIGN LOAD	
General purpose receptacles CEC 220.44	0.0 kVA			
First 10 kVA or less	0.0 @ 100% =	0.0 kVA		
Remainder over 10 kVA =	0.0 @ 50% =	0.0 kVA		
Lighting Loads =	0.0 @ 125% =	0.1 kVA		
Motor Loads	9.6 @ 100% =	9.6 kVA	TOTAL =	12.3 kVA
Largest Motor =	9.6 @ 25% =	2.4 kVA	TOTAL =	51.4 Amps
Continuous Loads =	0.0 @ 125% =	0.0 kVA		
Kitchen Loads CEC 220.56=	0.0 @ 100% =	0.0 kVA		
Noncontinuous Loads =	0.3 @ 100% =	0.3 kVA		
Noncoincident Loads =	0.0 @ 0% =	0.0 kVA		

Know what's below. Call before you dig.

M. NEILS ENGINEERING, INC.
Electrical Engineers | Lighting Designers
100 Howe Ave., Suite 235N
Sacramento, CA 95825-8217
www.mneilsengineering.com
Tel: (916) 923-4400
PROJECT #: 25227.21
PROJECT MGR: SKL/JLB

CALA
12150 Tributary Point Drive, Suite 140
Gold River, CA 95670
T 916.985.4366
www.callanderassociates.com

REVISION	DATE

LICENSED PROFESSIONAL ENGINEER — JOHN L. BRODERICK — E 24535 — ELECTRICAL — STATE OF CALIFORNIA

02/10/2026

CO-61 PARK

5125 ASHBBROOK ST,
ROSEVILLE, CA 95747

SUBMITTAL	DATE
30% Submittal	09/30/25
99% Submittal	11/18/25
100% Submittal	02/09/26

PROJECT NO: 25034
DRAWN BY: KL
CHECKED BY: JLB
SCALE: As Shown

SHEET TITLE

ONE-LINE POWER DIAGRAM & PANEL SCHEDULE

SHEET

E3.1

25 OF 28

File Path: \\MNDC1\Projects\2025 Projects\Callander Associates\25227.21 City of Roseville- CO-61 Park Site\Edwgs\25227.21_E3.1_ONE-LINE POWER DIAGRAM & PANEL SCHEDULE.dwg Plot Date: 2/9/26 Saved By: hkaminsky
Copyright © 2020 Callander Associates Landscape Architecture, Inc.

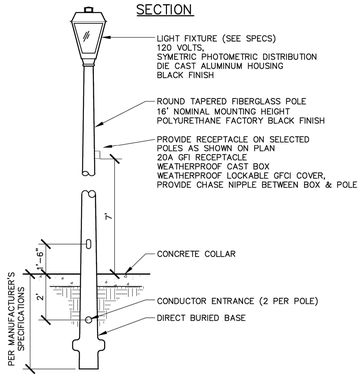

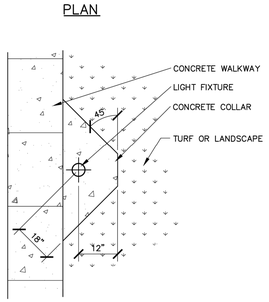

NOTES

1. INCLUDE MANUAL BYPASS IN POWER PEDESTAL FOR MANUAL OVERRIDE.
2. ALL LIGHTS TO BE LOCATED ADJACENT TO WALKWAYS.

JILL GELLER, CPRE
PARKS, RECREATION & LIBRARIES DIRECTOR

CITY OF ROSEVILLE CALIFORNIA — PARKS, RECREATION, & LIBRARIES DEPARTMENT

SECURITY LIGHT WITH CONCRETE COLLAR

SCALE: NONE
REVISED: JULY 2025
REVIEWED BY: T. GEE
APPROVED BY: J. GELLER

PK–MI–7

1 / E4.1 SECURITY LIGHT WITH CONCRETE COLLAR DETAIL

NO SCALE

UNDERGROUND PULL BOX SCHEDULE			
TAG	NOMINAL WIDTH	NOMINAL LENGTH	NOMINAL DEPTH
PB10	10"	17-1/4"	12"
REFER TO PLAN FOR LOCATION OF BOXES AND TYPES USED.			

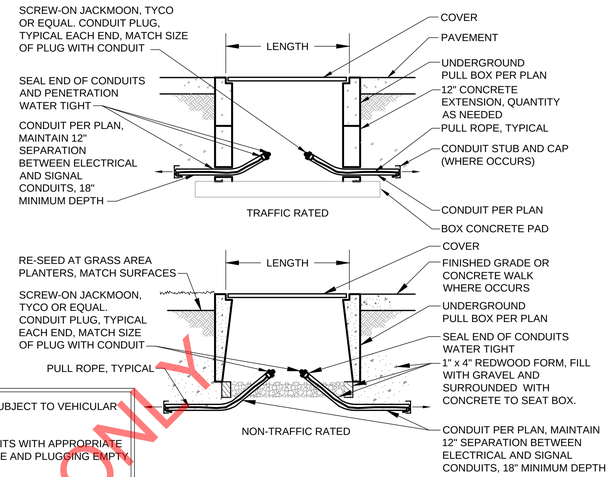

NOTES:

1. PULL BOX SHALL BE TRAFFIC RATED WHEN SUBJECT TO VEHICULAR TRAFFIC
2. CLEAN 2" AND LARGER SPARE EMPTY CONDUITS WITH APPROPRIATE SIZE MANDREL PRIOR TO PLACING PULL ROPE AND PLUGGING EMPTY CONDUITS WITH CONDUIT PLUGS.
3. PULL ROPE: TIE OFF EACH END TO DUCT PLUG TO PREVENT PULL ROPE LOSS IN CONDUIT.

2 / E4.1 UNDERGROUND PULL BOX (TRAFFIC RATED)

NO SCALE

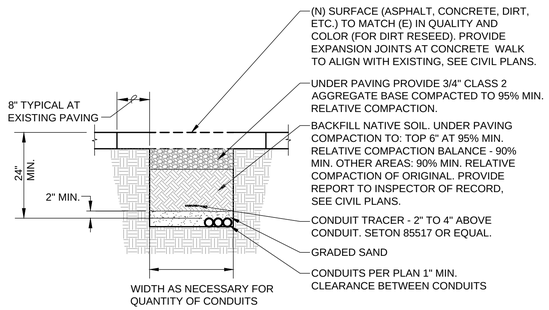

3 / E4.1 CONDUIT TRENCHING DETAIL

NO SCALE

NOTE: THIS SITE HAS SHALLOW WATER TABLE. TRENCH DEPTH AND BEDDING TO BE CONFIRMED WITH GEOTECH PRIOR TO TRENCHING.

FOR COUNCIL APPROVAL ONLY

CALA
12150 Tributary Point Drive, Suite 140
Gold River, CA 95670
T 916.985.4366
www.callanderassociates.com

REVISION	DATE

LICENSED PROFESSIONAL ENGINEER — JOHN L. BRODERICK — E 24535 — ELECTRICAL — STATE OF CALIFORNIA

02/10/2026

CO-61 PARK

5125 ASHBBROOK ST,
ROSEVILLE, CA 95747

SUBMITTAL	DATE
30% Submittal	09/30/25
99% Submittal	11/18/25
100% Submittal	02/09/26

PROJECT NO: 25034
DRAWN BY: KL
CHECKED BY: JLB
SCALE: As Shown

SHEET TITLE
ELECTRICAL DETAILS

SHEET
E4.1
26 OF 28

Know what's below. Call before you dig.

M. NEILS ENGINEERING, INC.
Electrical Engineers | Lighting Designers
100 Howe Ave., Suite 235N
Sacramento, CA 95825-8217
www.mneilsengineering.com
Tel: (916) 923-4400
PROJECT #: 25227.21
PROJECT MGR: SKL/JLB

File Path: \\MNEC1\Projects\2025 Projects\Callander Associates\25227.21 City of Roseville- CO-61 Park Site\Dwgs\25227.21_E4.1_ELECTRICAL DETAILS.dwg Plot Date: 2/9/26 saved By: kevin
Copyright © 2020 Callander Associates Landscape Architecture, Inc.

STATE OF CALIFORNIA
Outdoor Lighting CALIFORNIA ENERGY COMMISSION

CERTIFICATE OF COMPLIANCE	NRCC-LTO-E
Project Name: 25227.21 City of Roseville CO-61 Park	Report Page: (Page 1 of 7)
Project Address: Ashbrook St, Roseville, CA 95747	Date Prepared: 2025-11-06T18:26:37-05:00

This document is used to demonstrate compliance with requirements in 110.9, 130.0, 130.2, 140.7, and 141.0(b)2L for outdoor lighting scopes using the prescriptive path for nonresidential and hotel/motel occupancies. It is also used to document compliance with requirements in 160.5, 170.2(e)6, 180.1(a) and 180.2(b)4Bv for outdoor lighting scopes using the prescriptive path for multifamily and mixed-use occupancies. Multifamily includes dormitory and senior living facilities.

A. GENERAL INFORMATION

01	Project Location (city)	Roseville	04	Total Illuminated Hardscape Area (ft²)	2582
02	Climate Zone	11			
03	Outdoor Lighting Zone per Title 24 Part 1 10.114 or as designated by Authority Having Jurisdiction (AHJ):				
☐	LZ-0: Very Low - Undeveloped Parkland	☒ LZ-2: Moderate - Urban Clusters	☐ LZ-4: High - Must be reviewed by CA Energy Commission for Approval		
☐	LZ-1: Low - Rural Areas	☐ LZ-3: Moderately High - Urban Areas			
05	Occupancy Types within Project				
●	All Other Occupancies				

B. PROJECT SCOPE

This table includes outdoor lighting systems that are within the scope of the permit application and are demonstrating compliance using the prescriptive path outlined in 140.7 / 170.2(e)6 or 141.0(b)2L / 180.2(b)4Bv for alterations.

My Project Consists of:

01	02		
☒	New Lighting System	Must Comply with Allowances from 140.7 / 170.2(e)6	
☐	Altered Lighting System	Is your alteration increasing the connected lighting load (Watts)?	○ Yes ○ No

03	04	05
% of Existing Luminaires Being Altered[1]	Sum Total of Luminaires Being Added or Altered	Calculation Method
☐ < 10% ☐ >= 10% and < 50% ☐ >= 50%		

Please proceed to Table F. Outdoor Lighting Fixture Schedule to define the project's luminaires.

[1] FOOTNOTES: % of Existing Luminaires Being Altered = (Sum Total of Luminaires Being Added or Altered / Existing Luminaires within the Scope of the Permit Application) x 100.

STATE OF CALIFORNIA
Outdoor Lighting CALIFORNIA ENERGY COMMISSION

CERTIFICATE OF COMPLIANCE	NRCC-LTO-E
Project Name: 25227.21 City of Roseville CO-61 Park	Report Page: (Page 2 of 7)
	Date Prepared: 2025-11-06T18:26:37-05:00

C. COMPLIANCE RESULTS

Results in this table are automatically calculated from data input and calculations in Tables F through N. Note: If any cell on this table says "COMPLIES with Exceptional Conditions" refer to Table D. Exceptional Conditions for guidance or see applicable Table referenced below.

Calculations of Total Allowed Lighting Power (Watts) 140.7 / 170.2(e)6 or 141.0(b)2L / 180.2(b)4Bv											Compliance Results		
01		02		03		04		05	OR	06	=	07	≥	08	09
General Hardscape Allowance 140.7(d)1 / 170.2(e)6 (See Table I)	+	Per Application 140.7(d)2 / 170.2(e)6 (See Table J)	+	Sales Frontage 140.7(d)2 (See Table K)	+	Ornamental 140.7(d)2 / 170.2(e)6 (See Table L)	+	Per Specific Area 140.7(d)2 / 170.2(e)6 (See Table M)		Existing Power Allowance 141.0(b)2L / 180.2(b)4Bv (See Table N)		Total Allowed (Watts)		Total Actual (Watts)	07 must be >= 08
327.96	+	---	+	---	+	---	+	---	OR	---	=	327.96	≥	39	COMPLIES
Shielding Compliance (See Table G for Details)															N/A
Controls Compliance (See Table H for Details)															COMPLIES

D. EXCEPTIONAL CONDITIONS

This table is auto-filled with uneditable comments because of selections made or data entered in tables throughout the form.

E. ADDITIONAL REMARKS

This table includes remarks made by the permit applicant to the Authority Having Jurisdiction.

STATE OF CALIFORNIA
Outdoor Lighting CALIFORNIA ENERGY COMMISSION

CERTIFICATE OF COMPLIANCE	NRCC-LTO-E
Project Name: 25227.21 City of Roseville CO-61 Park	Report Page: (Page 3 of 7)
	Date Prepared: 2025-11-06T18:26:37-05:00

F. OUTDOOR LIGHTING FIXTURE SCHEDULE

For new or altered lighting systems demonstrating compliance with 140.7 / 170.2(e)6 all new luminaires being installed and any existing luminaires remaining or being moved within the spaces covered by the permit application are included in the Table below. For altered lighting systems using the Existing Power method per 141.0(b)2L only new luminaires being installed and replacement luminaires being installed as part of the project scope are included (ie, existing luminaires remaining or existing luminaires being moved are not included). Outdoor lighting attached to multifamily buildings and controlled from the inside of a dwelling unit are included in Table H. and are not included here. All other multifamily outdoor lighting is included here.

Designed Wattage:

01	02		03	04	05	06	07	08	09	10	
Name or Item Tag	Complete Luminaire Description		Watts per luminaire[1, 2]	How is Wattage determined	Total Number Luminaires [2]	Luminaire Status[3]	Excluded per 140.7(a) / 170.2(e)6A	Design Watts	Cutoff Req. > 6,200 initial lumen output 130.2(b) /160.5(c).1 [4]	Field Inspector	
										Pass	Fail
A	LED POST TOP LIGHT	☐ Linear	39	Mfr. Spec	1	New	☐	39	NA: < 6200 lumens	☐	☐
							Total Design Watts:	39			

* NOTES: Selections with a * require a note in the space below explaining how compliance is achieved.
EX: Luminaire is lighting a statue; EXCEPTION 2 to 130.2(b)

[1] FOOTNOTES: Authority Having Jurisdiction may ask for Luminaire cut sheets to confirm wattage used for compliance per 130.0(c) / 160.5(b)
[2] For linear luminaires, wattage should be indicated as W/ft instead of Watts/luminaire. Total linear feet should be indicated in column 05 instead of number of luminaires.
[3] Select "New" for new luminaires in a new outdoor lighting project, or for added luminaires in an alteration. Select "Altered" for replacement luminaires in an alteration. Select "Existing to Remain" for existing luminaires within the project scope that are not being altered and are remaining. Select "Existing Reinstalled" for existing luminaires which are being removed and reinstalled as part of the project scope.
[4] Compliance with mandatory shielding requirements is required for luminaires with initial lumen output >= 6,200 unless exempted by 130.2(b)/ 160.5(c)

G. SHIELDING REQUIREMENTS (BUG)

This section does not apply to this project.

STATE OF CALIFORNIA
Outdoor Lighting CALIFORNIA ENERGY COMMISSION

CERTIFICATE OF COMPLIANCE	NRCC-LTO-E
Project Name: 25227.21 City of Roseville CO-61 Park	Report Page: (Page 4 of 7)
	Date Prepared: 2025-11-06T18:26:37-05:00

H. OUTDOOR LIGHTING CONTROLS

This table demonstrates compliance with controls requirements for all new or altered luminaires installed as part of the permit application. For alteration projects, luminaires which are existing to remain (ie untouched) and luminaires which are removed and reinstalled (wiring only) do not need to be included in this table even if they are within the spaces covered by the permit application.
Outdoor lighting for nonresidential buildings, parking garages and common service areas in multifamily buildings must be documented separately from outdoor lighting attached to multifamily buildings and controlled from the inside of a dwelling unit

Mandatory Controls for Nonresidential Occupancies, Parking Garages & Common Areas in Multifamily Buildings

01	02	03	04	05	
Area Description	Shut-Off 130.2(c)1 / 160.5(c)	Auto-Schedule 130.2(c)2 / 160.5(c)	Motion Sensor 130.2(c)3 / 160.5(c)	Field Inspector	
				Pass	Fail
Park: "A"	Astronomical Timer	Provided	NA: Each Luminaire <= 40 Watts	☐	☐

[1] FOOTNOTE: Text has been abbreviated, please refer to Table 160.5-A to confirm compliance with the specific light source technologies listed.
[2] Authority having jurisdiction may ask for cutsheets or other documentation to confirm compliance of light source.
[3] Recessed luminaires marked for use in fire-rated installations, and recessed luminaires installed in non-insulated ceilings are excepted from ii and iii.

STATE OF CALIFORNIA
Outdoor Lighting CALIFORNIA ENERGY COMMISSION

CERTIFICATE OF COMPLIANCE	NRCC-LTO-E
Project Name: 25227.21 City of Roseville CO-61 Park	Report Page: (Page 5 of 7)
	Date Prepared: 2025-11-06T18:26:37-05:00

I. LIGHTING POWER ALLOWANCE (per 140.7 /170.2(e))

This table includes areas using allowance calculations per 140.7 /170.2(e). General Hardscape Allowance is per Table 140.7-A/Table 170.2-R while "Use it or lose it" Allowances are per Table 140.7-B /Table 170.2-S. Indicate which allowances are being used to expand sections for user input. Luminaires that qualify for one of the "Use it or lose it" allowances shall not qualify for another "Use it or lose it" allowance.
Outdoor lighting attached to multifamily buildings and controlled from the inside of a dwelling unit are included in Table H. and are not included here. All other multifamily outdoor lighting is included here.

	01				
	"Use it or lose it" Allowance (select all that apply) (select all that apply)				
☒ General Hardscape Allowance Table I (below)	☐ Per Application Table J	☐ Sales Frontage Table K	☐ Ornamental Table L	☐ Per Specific Area Table M	

Calculated General Hardscape Lighting Power Allowance per Table 140.7-A for Nonresidential & Hotel/Motel

02	03	04	05	06	07	08	09
Area Description	Area Wattage Allowance (AWA)			Linear Wattage Allowance (LWA)			Total General AWA + LWA (Watts)
	Illuminated Area (ft²)	Allowed Density (W/ft²)	Area Allowance (Watts)	Perimeter Length (lf)	Allowed Density (W/lf)	Linear Allowance (Watts)	
Park	2582	0.019	49.06	526	0.15	78.9	127.96
					Initial Wattage Allowance for Entire Site (Watts):		200
					Instances of Initial Wattage Allowance (LZ 0 only)[1]		
					Total General Hardscape Allowance (Watts):		327.96

J. LIGHTING ALLOWANCE: PER APPLICATION

This section does not apply to this project.

K. LIGHTING ALLOWANCE: SALES FRONTAGE

This section does not apply to this project.

L. LIGHTING ALLOWANCE: ORNAMENTAL

This section does not apply to this project.

STATE OF CALIFORNIA
Outdoor Lighting CALIFORNIA ENERGY COMMISSION

CERTIFICATE OF COMPLIANCE	NRCC-LTO-E
Project Name: 25227.21 City of Roseville CO-61 Park	Report Page: (Page 6 of 7)
	Date Prepared: 2025-11-06T18:26:37-05:00

M. LIGHTING ALLOWANCE: PER SPECIFIC AREA

This section does not apply to this project.

N. EXISTING CONDITIONS POWER ALLOWANCE (alterations only)

This section does not apply to this project.

O. DECLARATION OF REQUIRED CERTIFICATES OF INSTALLATION

Selections have been made based on information provided in this document. If any selection has been changed by permit applicant, an explanation should be included in Table E. Additional Remarks. These documents must be provided to the building inspector during construction and can be found online

Form/Title
NRCI-LTO-E - Must be submitted for all buildings

P. DECLARATION OF REQUIRED CERTIFICATES OF ACCEPTANCE

Selections have been made based on information provided in this document. If any selection has been changed by permit applicant, an explanation should be included in Table E. Additional Remarks. These documents must be provided to the building inspector during construction and must be completed through an Acceptance Test Technician Certification Provider (ATTCP). For more information visit: http://www.energy.ca.gov/title24/atttcp/providers.html

Form/Title	Systems/Spaces To Be Field Verified
NRCA-LTO-02-A - Must be submitted for all outdoor lighting controls except for alterations where controls are added to <= 20 luminaires.	Park: "A"

STATE OF CALIFORNIA
Outdoor Lighting CALIFORNIA ENERGY COMMISSION

CERTIFICATE OF COMPLIANCE	NRCC-LTO-E
Project Name: 25227.21 City of Roseville CO-61 Park	Report Page: (Page 7 of 7)
Project Address: Ashbrook St, Roseville, CA 95747	Date Prepared: 2025-11-06T18:26:37-05:00

DOCUMENTATION AUTHOR'S DECLARATION STATEMENT

I certify that this Certificate of Compliance documentation is accurate and complete.

Documentation Author Name: Julia Brodovsky	Documentation Author Signature:
Company: M. Neils Engineering	Signature Date: 02/10/2026
Address: 100 Howe Ave, Suite 235N	CEA/ HERS Certification Identification (if applicable):
City/State/Zip: Sacramento, CA 95825	Phone: 916-923-4400

RESPONSIBLE PERSON'S DECLARATION STATEMENT

I certify the following under penalty of perjury, under the laws of the State of California:
1. The information provided on this Certificate of Compliance is true and correct.
2. I am eligible under Division 3 of the Business and Professions Code to accept responsibility for the building design or system design identified on this Certificate of Compliance (responsible designer)
3. The energy features and performance specifications, materials, components, and manufactured devices for the building design or system design identified on this Certificate of Compliance conform to the requirements of Title 24, Part 1 and Part 6 of the California Code of Regulations.
4. The building design features or system design features identified on this Certificate of Compliance are consistent with the information provided on other applicable compliance documents, worksheets, calculations, plans and specifications submitted to the enforcement agency for approval with this building permit application.
5. I will ensure that a completed signed copy of this Certificate of Compliance shall be made available with the building permit(s) issued for the building, and made available to the enforcement agency for all applicable inspections. I understand that a completed signed copy of this Certificate of Compliance is required to be included with the documenta vides to the building owner at occupancy.

Responsible Designer Name: Julia Brodovsky	Responsible Designer Signature:
Company: M. Neils Engineering	Date Signed: 02/10/2026
Address: 100 Howe Ave, Suite 235N	License: E24535
City/State/Zip: Sacramento, CA 95825	Phone: 916-923-4400

FOR COUNCIL APPROVAL ONLY

CALA
12150 Tributary Point Drive, Suite 140
Gold River, CA 95670
T 916.985.4366
www.calanderassociates.com

REVISION	DATE

LICENSED PROFESSIONAL ENGINEER — JULIA L. BRODOVSKY — E 24535 — ELECTRICAL — STATE OF CALIFORNIA

02/10/2026

CO-61 PARK
5125 ASHBBROOK ST,
ROSEVILLE, CA 95747

SUBMITTAL	DATE
30% Submittal	09/30/25
99% Submittal	11/18/25
100% Submittal	02/09/26

PROJECT NO: 25034
DRAWN BY: KL
CHECKED BY: JLB
SCALE: As Shown

SHEET TITLE
TITLE 24 OUTDOOR LIGHTING COMPLIANCE FORMS

SHEET
E5.1
27 OF 28

Know what's below. Call before you dig.

M. NEILS ENGINEERING, INC.
Electrical Engineers | Lighting Designers
100 Howe Ave., Suite 235N
Sacramento, CA 95825-8217
www.mneilsengineering.com
Tel: (916) 923-4400
PROJECT #: 25227.21
PROJECT MGR: SKL/JLB

File Path: \\ MNEIC1\Projects\2025 Projects\Calander Association\25227.21 City of Roseville - CO-61 Park Site I\dwgs\25227.21_ER_1_TITLE 24 OUTDOOR LIGHTING FORMS.dwg Plot Date: 2/9/26 Saved By: Keito
Copyright © 2026 Calander Associates Landscape Architecture, Inc.

STATE OF CALIFORNIA
Electrical Power Distribution
CALIFORNIA ENERGY COMMISSION

CERTIFICATE OF COMPLIANCE — **NRCC-ELC-E**

This document is used to demonstrate compliance with mandatory requirements in 130.5, for electrical systems in newly constructed nonresidential and hotel/motel occupancies and 160.6 and 160.9 for electrical systems in newly constructed multifamily occupancies. Additions and alterations to electrical service systems in nonresidential and hotel/motel occupancies will also use this document to demonstrate compliance per 141.0(a) or 141.0(b)2P for alterations. For multifamily addition or alterations compliance will be documented per 180.1(a) or 180.2 (b)4Bvii

Project Name:	25227.21 City of Roseville CO-61 Park	**Report Page:**	**(Page 1 of 4)**
Project Address:		**Date Prepared:**	2025-11-06T18:46:12-05:00

A. GENERAL INFORMATION

01	Project Location (city)	Roseville	02	Climate Zone	11
			03	Occupancy Types Within Project:	All Other Occupancies

B. PROJECT SCOPE

This table includes electrical systems that are within the scope of the permit application.

01	02	03	04	05	06	07
Electrical Service Designation/ Description	Scope of Work [1]	Rating[2] (kVA)	Utility Provided Metering System Exception to 130.5(a)/160.6(a)	System subject to CA Elec Code Article 517 Exception to 130.5(a)and (b)	Demand Response Controls	Provides power to dwelling units/common living areas only in multifamily occupancy
Existing Service	Add/Alt to feeders and branch circuits only	---	☐	☐	Where required, demand response controls must be specified which are capable of receiving and automatically responding to at least one standards based messaging protocol which enables demand response after receiving a demand response signal. Sections 120.2/160.3, 130.1/160.5, and 130.3/160.5, and mechanical, indoor lighting, and sign lighting Certificate of Compliance documents will indicate when demand response controls are required.	☐

[1] FOOTNOTES: Adding only new feeders and branch circuits triggers Voltage Drop 130.5(c)/160.6(c), no other requirements from 130.5/160.6 are required.
[2] If common use areas in a multifamily are submetered, rating is for submeter size serving common use areas.
[3] Applicable if the utility company is providing a metering system that indicates instantaneous kW demand and kWh for a utility-defined period.

STATE OF CALIFORNIA
Electrical Power Distribution
CALIFORNIA ENERGY COMMISSION

CERTIFICATE OF COMPLIANCE — **NRCC-ELC-E**

Project Name:	25227.21 City of Roseville CO-61 Park	**Report Page:**	**(Page 2 of 4)**
		Date Prepared:	2025-11-06T18:46:12-05:00

C. COMPLIANCE RESULTS

Results in this table are automatically calculated from data input and calculations in Tables F through I. Note: If any cell on this table says "COMPLIES with Exceptional Conditions" refer to Table D. Exceptional Conditions for guidance or see applicable Table referenced below.

01		02		03		04	05	06
Service Electrical Metering 130.5(a)/ 160.6(a) (See Table F)	AND	Separation for Monitoring 130.5(b)/ 160.6(b) (See Table G)	AND	Voltage Drop 130.5(c)/ 160.6(c) (See Table H)	AND	Controlled Receptacles 130.5(d)/ 160.6(d) (See Table I)	Electric Ready 160.9 (See Table J)	**Compliance Results**
	AND		AND	Yes	AND			COMPLIES

D. EXCEPTIONAL CONDITIONS

This table is auto-filled with uneditable comments because of selections made or data entered in tables throughout the form.

E. ADDITIONAL REMARKS

This table includes remarks made by the permit applicant to the Authority Having Jurisdiction.

H. VOLTAGE DROP

This table includes entirely new or complete replacement electrical power distribution systems, or alterations that add, modify or replace both feeders and branch circuits to demonstrate compliance with 130.5(c)/ 160.6(c). For alterations, only the altered circuits must demonstrate compliance per 141.0(b)2Pii/ 180.2(b)4Bviic.

01	02			03	04	05	
Electrical Service Designation/Description	Combined Voltage Drop on Installed Feeder/Branch Circuit Conductors Compliance Method			Location of Voltage Drop Calculations[1]	Sheet Number for Voltage Drop Calculations in Construction Documents	Field Inspector	
						Pass	Fail
Existing Service	☒ Voltage drop less than 5%	☐	Permitted by CA Elec Code (Exception to 130.5(c))*	In construction documents	E3.1	☐	☐

** NOTES: If "Permitted by CA Elec Code *" is selected under Compliance Method above, please indicate where the exception applies in the space provided below.*

[1] FOOTNOTES: Voltage drop calculations may be attached to the permit application outside the construction documents if allowed by the Authority Having Jurisdiction. Select "attached" if applicable. If calculations will be the responsibility of the installing contractor, select "Contractor Responsible".

STATE OF CALIFORNIA
Electrical Power Distribution
CALIFORNIA ENERGY COMMISSION

CERTIFICATE OF COMPLIANCE — **NRCC-ELC-E**

Project Name:	25227.21 City of Roseville CO-61 Park	**Report Page:**	**(Page 3 of 4)**
		Date Prepared:	2025-11-06T18:46:12-05:00

K. DECLARATION OF REQUIRED CERTIFICATES OF INSTALLATION

Selections have been made based on information provided in this document. If any selection have been changed by permit applicant, an explanation should be included in Table E. Additional Remarks. These documents must be provided to the building inspector during construction and can be found online

Form/Title
NRCI-ELC-E - Must be submitted for all buildings

L. DECLARATION OF REQUIRED CERTIFICATES OF ACCEPTANCE

There are no NRCA forms required for this project.

STATE OF CALIFORNIA
Electrical Power Distribution
CALIFORNIA ENERGY COMMISSION

CERTIFICATE OF COMPLIANCE — **NRCC-ELC-E**

Project Name:	25227.21 City of Roseville CO-61 Park	**Report Page:**	**(Page 4 of 4)**
Project Address:		**Date Prepared:**	2025-11-06T18:46:12-05:00

DOCUMENTATION AUTHOR'S DECLARATION STATEMENT

I certify that this Certificate of Compliance documentation is accurate and complete.

Documentation Author Name: Julia Brodovsky	Documentation Author Signature:
Company: M. Neils Engineering	Signature Date: 02/10/2026
Address: 100 Howe Ave, Suite 235N	CEA/ HERS Certification Identification (if applicable):
City/State/Zip: Sacramento, CA 95825	Phone: 916-923-4400

RESPONSIBLE PERSON'S DECLARATION STATEMENT

I certify the following under penalty of perjury, under the laws of the State of California:

1. The information provided on this Certificate of Compliance is true and correct.
2. I am eligible under Division 3 of the Business and Professions Code to accept responsibility for the building design or system design identified on this Certificate of Compliance (responsible designer)
3. The energy features and performance specifications, materials, components, and manufactured devices for the building design or system design identified on this Certificate of Compliance conform to the requirements of Title 24, Part 1 and Part 6 of the California Code of Regulations.
4. The building design features or system design features identified on this Certificate of Compliance are consistent with the information provided on other applicable compliance documents, worksheets, calculations, plans and specifications submitted to the enforcement agency for approval with this building permit application.
5. I will ensure that a completed signed copy of this Certificate of Compliance shall be made available with the building permit(s) issued for the building, and made available to the enforcement agency for all applicable inspections. I understand that a completed signed copy of this Certificate of Compliance is required to be included with the documentation rovides to the building owner at occupancy.

Responsible Designer Name: Julia Brodovsky	Responsible Designer Signature:
Company: M. Neils Engineering	Date Signed: 02/10/2026
Address: 100 Howe Ave, Suite 235N	License: E24535
City/State/Zip: Sacramento, CA 95825	Phone: 916-923-4400

FOR COUNCIL APPROVAL ONLY

CALA
12150 Tributary Point Drive, Suite 140
Gold River, CA 95670
T 916.985.4366
www.callanderassociates.com

REVISION	DATE

LICENSED PROFESSIONAL ENGINEER — JULIA L. BRODOVSKY — No. E 24535 — ELECTRICAL — STATE OF CALIFORNIA

02/10/2026

CO-61 PARK
5125 ASHBBROOK ST,
ROSEVILLE, CA 95747

SUBMITTAL	DATE
30% Submittal	09/30/25
99% Submittal	11/18/25
100% Submittal	02/09/26

PROJECT NO: 25034
DRAWN BY: KL
CHECKED BY: JLB
SCALE: As Shown

SHEET TITLE
TITLE 24 ELECTRICAL POWER DISTRIBUTION COMPLIANCE FORMS

SHEET
E5.2
28 OF 28

811 Know what's below. Call before you dig.

M. NEILS ENGINEERING, INC.
Electrical Engineers | Lighting Designers
100 Howe Ave., Suite 235N
Sacramento, CA 95825-8217
www.mneilsengineering.com
Tel: (916) 923-4400
PROJECT #: 25227.21
PROJECT MGR: SKL/JLB

File Path: \\MNDC1\Projects\2025 Projects\Callander Associates\25227.21 City of Roseville- CO-61 Park Site 1\Edwgs\25227.21_E5.2_TITLE 24 ELECTRICAL POWER DISTRIBUTION FORMS.dwg Plot Date: 2/9/26 Saved By: Kelto
Copyright © 2026 Callander Associates Landscape Architecture, Inc.

City Council Communication

Meeting Date: 3/4/2026
Item #: VII.17
File #: 0210
Item ID: 2026-131

Title:	Property Tax Revenue Consulting Services - Professional Services Agreement
Contact:	Jeannine Thrash 916-774-5473 jthrash@roseville.ca.us

SUMMARY

Staff recommends approval of a professional services agreement with HdL Coren & Cone to provide property tax revenue consulting services for an amount not to exceed $88,500 and a term of three years, with two optional one-year renewals. There are adequate funds available in the FY2025-26 adopted budget to fund this agreement.

RECOMMENDATION

Staff recommends the City Council adopt a resolution authorizing the City Manager to execute a Professional Services Agreement between the City of Roseville and HdL Coren & Cone to provide property tax revenue consulting services.

Staff requests that the City Council authorize the City Manager or his or her designee to execute two (2) additional one (1) year renewals without further City Council approval, provided that the applicable budget is approved by the City Council, or until staff determines that continuing with this consultant is not in the best interest of the City.

BACKGROUND

The City issued a Request for Proposals to identify the most qualified firm to provide property tax revenue consulting services. City staff completed an evaluation of the submitted proposals and recommend that the City authorize the City Manager to enter into an agreement with HdL Coren & Cone (HdLCC) to perform the requested services based on several factors, including cost, experience, staff expertise, and services provided.

HdLCC was founded in 1992 and has been serving cities and special districts for over 30 years. The City has worked with HdLCC for over five years. The services provided by HdLCC include reports detailing assessed property tax data and property tax revenue trends. This information has provided the City with additional data to support the development of short and long-term property tax revenue forecasts. This information is also used for planning, economic development, and public information purposes. The audit services provided by HdLCC will ensure the City is receiving all property tax revenue due.

FISCAL IMPACT

The term of this agreement is three years, with an option to renew for two additional years. The recommended professional services agreement with HdLCC has a not-to-exceed amount of $88,500 through March 1, 2029. This includes a base fixed fee of $27,500 per year for property tax services and a contingency fee equal to 25% of net tax revenues recovered through audit efforts, estimated at $2,000 per year. There are adequate funds available in the FY2025-26 adopted budget to fund this agreement. Staff will incorporate the future year costs of this agreement in the proposed FY2026-27 budget and beyond.

ENVIRONMENTAL REVIEW

The California Environmental Quality Act (CEQA) only applies to projects which have the potential to cause a significant effect on the environment. Where it can be seen with certainty that there is no possibility that the activity in question may have a significant effect on the environment, the activity is not subject to CEQA. (CEQA Guidelines §15061(b)(3)).

CITY COUNCIL STRATEGIC PLAN/OVERARCHING GOALS

6. Deliver exceptional City services

Respectfully Submitted,
Jeannine Thrash, Management Analyst

Scott Pettingell, Finance Director

ATTACHMENTS:

1. Resolution 26-051
2. Agreement

REVIEWERS:

Jeannine Thrash, Finance Department	Created/Initiated - 2/11/2026
Scott Pettingell, Finance Department	Approved - 2/17/2026
Kelly Aye, City Attorney Department	Approved - 2/18/2026
Katrina Six, City Clerk Department	Approved - 2/18/2026
Ryan DeVore, City Manager Department - Assistant City Manager	Approved - 2/19/2026
Dennis Kauffman, City Manager Department - Assistant City Manager	Approved - 2/20/2026
Michelle Sheidenberger, City Attorney Department	Approved - 2/20/2026
Dominick Casey, City Clerk Department	Approved - 2/23/2026
Katrina Six, City Clerk Department	Final Approval - 2/23/2026

RESOLUTION NO. 26-051

APPROVING A PROFESSIONAL SERVICES AGREEMENT, BY AND BETWEEN THE CITY OF ROSEVILLE AND HDL COREN & CONE, AND AUTHORIZING THE CITY MANAGER TO EXECUTE IT ON BEHALF OF THE CITY OF ROSEVILLE

WHEREAS, a Professional Services Agreement for Tax Revenue Consulting Services, by and between the City of Roseville and HdL Coren & Cone, has been reviewed by the City Council; and

NOW, THEREFORE, BE IT RESOLVED by the Council of the City of Roseville that said Professional Services Agreement is hereby approved and that the City Manager is authorized to execute it on behalf of the City of Roseville.

BE IT FURTHER RESOLVED, that the City Manager or his or her designee is authorized to execute two (2) additional one (1) year renewals without further City Council approval, provided that the applicable budget is approved by the City Council, or until staff determines that continuing with this consultant is not in the best interest of the City.

PASSED AND ADOPTED by the Council of the City of Roseville this ___ day of _____, 2026, by the following vote on roll call:

AYES COUNCILMEMBERS:

NOES COUNCILMEMBERS:

ABSENT COUNCILMEMBERS:

_____
MAYOR

ATTEST:

_____
City Clerk

PROFESSIONAL SERVICES AGREEMENT

Tax Revenue Consulting Services

THIS AGREEMENT is made and entered into this ___ day of _____, 2026, by and between the City of Roseville, a municipal corporation ("CITY"), and HdL Coren & Cone, a California corporation ("CONSULTANT"); and

W I T N E S S E T H:

WHEREAS, CITY desires professional services consisting of tax revenue consulting services; and

WHEREAS, CONSULTANT has prepared a proposal dated January 20, 2026, which describes the scope of work to be performed by CONSULTANT, the budget for the work, and the schedule for performance of the work; and

WHEREAS, CONSULTANT is qualified and experienced to provide such professional services.

NOW, THEREFORE, the parties agree as follows:

1. Term. The term of this Agreement shall commence upon execution and expire on March 1, 2029. The City Manager may, in his or her discretion, elect to extend the Agreement in one (1) year increments for up to an additional two (2) years by giving CONSULTANT thirty (30) days advance written notice of each optional one (1) year renewal. Such extensions shall be memorialized by a written amendment to this Agreement. The City Manager or designee is so authorized without further City Council approval to exercise said options, provided that the applicable budget is approved by the City Council

each year, or the optional year costs will not exceed the amount per optional renewal year stated in Section 3, below.

2. Services. CONSULTANT shall perform, at the direction of CITY, the scope of services as described in EXHIBIT "A," attached hereto and incorporated herein by this reference.

3. Compensation. For its services provided hereunder, CONSULTANT shall be compensated on a fixed annual fee in accordance with the budget estimate as described in EXHIBIT "B," attached hereto and incorporated herein by this reference. Total compensation shall not exceed eight-eight thousand, five hundred dollars ($88,500) for the initial term; total compensation for each optional renewal year shall not exceed twenty-nine thousand five hundred dollars ($29,500) per renewal year. In addition, CONSULTANT shall be entitled to twenty-five percent (25%) of net tax revenues recovered for CITY in the audits performed over the period allowable by State statute.

CONSULTANT shall submit quarterly invoices for its services. Such invoices shall be for one-fourth (1/4) of the total fixed fee compensation amount (and if additional hourly services are requested, those shall be delineated by task, the person performing the services, and the hourly rate, which shall be stated in time increments of not greater than one tenth (1/10) hours). CITY shall pay invoices within thirty (30) days after receipt, if the services specified in the invoice have been satisfactorily completed.

4. Indemnification. To the fullest extent allowed by law, CONSULTANT shall defend, indemnify, and save and hold harmless CITY, its officers, agents, employees and volunteers from any claims, suits or actions of every name, kind and description brought forth, or on account of, injuries to or death of any person (including but not limited to workers and

the public), or damage to property, resulting from or arising out of CONSULTANT's willful misconduct or negligent act or omission while engaged in the performance of obligations or exercise of rights created by this Agreement, except those matters arising from CITY's sole negligence or willful misconduct. The parties intend that this provision shall be broadly construed.

CONSULTANT agrees to defend and indemnify CITY if, despite the parties intent and practice, any venue, agency, or court with competent jurisdiction determines that CONSULTANT and/or any of its agents, officers, employees, volunteers, independent contractors, or subcontractors, are characterized as employee(s) of CITY.

CONSULTANT's responsibility for such defense and indemnity obligations shall survive the termination or completion of this Agreement for the full period of time allowed by

law. The defense and indemnity obligations of this Agreement are undertaken in addition to, and shall not in any way be limited by, the insurance obligations contained in this Agreement.

5. Insurance. CONSULTANT agrees to continuously maintain, in full force and effect, the following minimum policies of insurance during the term of this Agreement.

COVERAGE	LIMITS OF LIABILITY
Workers' Compensation	Statutory
Commercial General Liability	$1,000,000 each occurrence $2,000,000 aggregate Personal Injury: $1,000,000 each occurrence $2,000,000 aggregate

Automobile Liability	$1,000,000 combined single limit
Professional Liability (errors and omissions)	$1,000,000 per claim $2,000,000 aggregate

a. Form. CONSULTANT shall submit a certificate evidencing such coverage for the period covered by this Agreement in a form satisfactory to Risk Management and the City Attorney, prior to undertaking any work hereunder. Any insurance written on a claims made basis is subject to the approval of Risk Management and the City Attorney.

b. Additional Insureds. CONSULTANT shall also provide a separate endorsement form or section of the policy showing CITY, its officers, agents, employees and volunteers as additional insureds for each type of coverage, except for Workers' Compensation and Professional Liability. Such insurance shall specifically cover the contractual liability of CONSULTANT. The additional insured coverage under the CONSULTANT's policy shall be primary and noncontributory, as evidenced by a separate endorsement or section of the policy, and shall not seek contribution from CITY's insurance or self-insurance. In addition, the

additional insured coverage shall be at least as broad as the Insurance Services Office ("ISO") CG 20 01 Endorsement. Any available insurance proceeds in excess of the specified minimum insurance coverage requirements and limits shall be available to the additional insureds. Furthermore, the requirements for coverage and limits shall be: (1) the minimum coverage and limits specified in this Agreement; or (2) the full coverage and maximum limits of any insurance proceeds available to the named insureds, whichever is greater.

c. Cancellation/Modification. CONSULTANT shall provide ten (10) days

written notice to CITY prior to cancellation or modification of any insurance required by this Agreement.

d. Umbrella/Excess Insurance. The limits of insurance required in this Agreement may be satisfied by a combination of primary and excess insurance. Any excess insurance shall contain or be endorsed to contain a provision that such coverage shall also apply on a primary and noncontributory basis for the benefit of CITY (if agreed to in a written contract) before CITY's own insurance shall be called upon to protect it as a named insured.

e. Subcontractors. CONSULTANT agrees to include in its contracts with all subcontractors the same requirements and provisions of this Agreement, including the indemnity and insurance requirements, to the extent they apply to the scope of the subcontractor's work.

Furthermore, CONSULTANT shall require its subcontractors to agree to be bound to CONSULTANT and CITY in the same manner and to the same extent as CONSULTANT is bound to CITY under this Agreement. Additionally, CONSULTANT shall obligate its subcontractors to comply with these same provisions with respect to any tertiary subcontractor, regardless of tier. A copy of CITY's indemnity and insurance provisions will be furnished to the subcontractor or tertiary subcontractor upon request.

f. Self-Insured Retentions. All self-insured retentions ("SIR") must be disclosed to Risk Management for approval and shall not reduce the limits of liability. Policies containing any SIR provision shall provide or be endorsed to provide that the SIR may be satisfied by either the named insured or CITY. CITY reserves the right to obtain a full certified copy of any insurance policy and endorsements. The failure to exercise this right

shall not constitute a waiver of such right.

g. Waiver of Subrogation. CONSULTANT hereby agrees to waive subrogation which any insurer of CONSULTANT may acquire from CONSULTANT by virtue of the payment of any loss under a Workers Compensation, Commercial General Liability or Automobile Liability policy. All Workers Compensation, Commercial General Liability and Automobile Liability policies shall be endorsed with a waiver of subrogation in favor of CITY, its officers, agents, employees and volunteers for all worked performed by CONSULTANT, its employees, agents and subcontractors.

h. Liability/Remedies. Insurance coverage in the minimum amounts set forth

herein shall not be construed to relieve CONSULTANT of liability in excess of such coverage, nor shall it preclude CITY from taking such other actions as are available to it under any other provisions of this Agreement or law.

6. Records. CONSULTANT and its subcontractors shall maintain all files and records relating to the services performed hereunder during the term of this Agreement and for a period of not less than one (1) year after the date of termination or expiration. Provided, however, that in the event of litigation or settlement of claims arising from the performance of this Agreement, CONSULTANT and its subcontractors shall maintain all files and records until such litigation, appeals or claims are resolved. Duly authorized representatives of CITY shall have right of access during normal business hours and after reasonable notice to CONSULTANT's and subcontractors' files and records relating to the services performed hereunder and may review and copy the files and records at appropriate stages during performance of the services and during the one (1) year period following termination or expiration of this Agreement. CONSULTANT shall include this provision in its contracts

with all subcontractors.

7. Time is of the Essence. Time is of the essence of this Agreement.

8. Reserved.

9. Compliance with Laws. CONSULTANT shall comply with all federal, state and local laws, ordinances and policies as may be applicable to the performance of services under this Agreement.

10. Ability to Perform. CONSULTANT agrees and represents that it has the time, ability and professional expertise to perform the services required under this Agreement.

11. Public Contracts: Conflicts of Interest. CONSULTANT's duties and services under this Agreement shall not include preparing or assisting CITY with any portion of the CITY's preparation of a request for proposals, request for qualifications, or any other solicitation regarding a subsequent or additional contract with CITY. CITY shall at all times retain responsibility for public contracting, including with respect to any subsequent phase of this project. CONSULTANT's participation in the planning, discussions, or drawing of project plans or specifications shall be limited to conceptual, preliminary, or initial plans or specifications.

CONSULTANT shall cooperate with CITY to ensure that all bidders for a subsequent contract on any subsequent phase of this project have access to the same information, including all conceptual, preliminary, or initial plans or specifications prepared by CONSULTANT pursuant to this Agreement.

12. Governing Agreement. In the event of any conflict between this Agreement and its EXHIBITS, the provisions of this Agreement shall govern. In the event of any conflict between any of the EXHIBITS, the provisions of the first in order of attachment shall

govern.

13. Assignment. CONSULTANT is employed to perform unique personal services. CONSULTANT shall not assign this Agreement without the prior written consent of CITY. CONSULTANT shall not employ or otherwise incur any obligation to pay other specialists or experts for services in connection with this Agreement, without prior written consent of CITY.

14. Independent Contractor. CONSULTANT, inclusive of its agents, officers, employees, volunteers, independent contractors, and subcontractors, shall act as an independent contractor, and covenants and agrees that it will conduct itself consistent with such status, that it will neither hold itself out as, nor claim to be, an officer or employee of CITY by reason of this Agreement.

CONSULTANT and CITY agree that: (a) CONSULTANT is free from the control and direction of CITY in connection with the performance of the work; (b) CONSULTANT is providing services directly to CITY; (c) CONSULTANT has and will maintain at all relevant times a business license; (d) CONSULTANT maintains a business location that is separate from CITY; (e) CONSULTANT is customarily engaged in an independently established business of the same nature as that involved in the work performed hereunder; (f) CONSULTANT actually contracts with other businesses to provide the same or similar services and maintains a clientele without restrictions from CITY; (g) CONSULTANT advertises and holds itself out to the public as available to provide the same or similar services; (h) CONSULTANT provides its own tools, vehicles, and equipment to perform the services; (i) CONSULTANT has negotiated its own rates; (j) CONSULTANT set its own hours and location of work in accomplishing CITY's on- call needs; and (k) CONSULTANT

has the right to control the manner and means of accomplishing the result desired and exercises its own expert independent judgement.

15. Representations and Warranties. CONSULTANT warrants that it has not employed or retained any company or person, other than a bona fide employee working for CONSULTANT, to solicit or secure this Agreement, and that it has not paid or agreed to pay any company or person, other than a bona fide employee, any fee, commission, percentage, brokerage fee, gift or any other consideration, contingent upon or resulting from the award or making of this Agreement. For breach or violation of this warranty, CITY shall have the right to terminate as void this Agreement, without liability, or, in its discretion, to deduct from the Agreement price or consideration, or otherwise recover, the full amount of such fee, commission, percentage, brokerage fee, gift or contingent fee.

16. Successors in Interest. This Agreement shall be binding upon the heirs, successors, executors, administrators and assigns of the respective parties hereto.

17. Copyright, Ownership and Use of Materials. All tangible material ("Material") created or delivered pursuant to this Agreement is considered a work made for hire under the Copyright Act. To the extent such Material does not qualify as a work made for hire, CONSULTANT hereby assigns to CITY all right, title, and interest, including but not limited to all copyrights, in all Material created by CONSULTANT in its performance under this Agreement. Material constitutes the scope of work outlined in Exhibit A and attached hereto, and all written and other tangible expressions, including but not limited to, drawings (including computer aided drawings), papers, documents, reports, surveys, renderings, exhibits, sketches, maps, models, prints, paintings or photographs, in any and all media or formats in which such materials have been created or are maintained. All Material furnished

by CONSULTANT is, and shall remain, the property of CITY.

CONSULTANT shall execute any documents necessary to effectuate such assignment. In the event that CONSULTANT uses, employs, designates, or retains any person or entity who is not an employee of CONSULTANT, to perform any work required of it pursuant to this Agreement, CONSULTANT shall require said person or entity to execute an agreement containing the preceding paragraph.

18. Termination of Agreement. The City may terminate this Agreement without cause by giving CONSULTANT ten (10) days advance written notice from the City Manager. CONSULTANT may terminate this Agreement without cause by giving CITY thirty (30) days

advance written notice. In the event of termination through no fault of CONSULTANT, CITY shall compensate CONSULTANT for services performed as of the date of termination, upon the release to CITY of all Material hereunder, in any and all media or formats in which such materials have been created or are maintained. CITY retains the right to receive and use any Material, notwithstanding any termination or any dispute regarding the amount to be paid.

19. Attorney's Fees; Venue; Governing Law. If either party commences any legal action against the other party arising out of this Agreement or the performance hereof, the prevailing party in such action shall be entitled to recover its reasonable litigation expenses, including but not limited to, court costs, expert witness fees, discovery expenses, and attorney's fees. Any action arising out of this Agreement shall be brought in Placer County, California, regardless of where else venue may lie. This Agreement shall be governed by and construed in accordance with the laws of the State of California.

20. Modification. This Agreement and each provision contained herein may be waived, amended, supplemented or eliminated only by mutual written agreement of the parties.

21. Severability. If any of the provisions contained in this Agreement are for any reason held invalid or unenforceable, such holding shall not affect the remaining provisions or the validity and enforceability of the Agreement as a whole.

22. Notices. Any notices to parties required by this Agreement shall be delivered personally or mailed, U.S. first class postage prepaid, addressed as follows:

CITY OF ROSEVILLE	CONSULTANT
Finance Department	HdL Coren & Cone
Attn: Scott Pettingell	Attn: Paula Cone
311 Vernon Street	120 S. State College Boulevard
Roseville, CA 95768	Brea, CA 92821

Either party may amend its address for notice by giving notice to the other party in writing.

23. Integrated Agreement. This is an integrated agreement and contains all of the terms, considerations, understanding and promises of the parties. It shall be read as a whole.

IN WITNESS WHEREOF, the City of Roseville, a municipal corporation, has authorized the execution of this Agreement in duplicate by its City Manager and attested to by its City Clerk under the authority of Resolution No._____, adopted by the Council of the City of Roseville on the_____day of_____, 20__, and CONSULTANT has caused this Agreement to be executed.

CITY OF ROSEVILLE, a municipal corporation

BY: _____
DOMINICK CASEY
City Manager

HDL COREN & CONE, a California corporation

BY: _____
its: CFO

[SIGNATURES CONTINUED ON FOLLOWING PAGE]

and

ATTEST:

BY: _____
its: _____

BY: _____
CARMEN AVALOS
City Clerk

APPROVED AS TO FORM:

BY: _____
MICHELLE SHEIDENBERGER
City Attorney

APPROVED AS TO SUBSTANCE:

Scott Pettingell Digitally signed by Scott Pettingell
Date: 2026.02.20 09:17:57 -08'00'

BY: _____
SCOTT PETTINGELL
Finance Director

HdL Coren & Cone

RESOLUTION OF THE BOARD OF DIRECTORS OF HDL COREN & CONE, A CALIFORNIA CORPORATION, DECLARING SIGNATURE AUTHORITY

WHEREAS, the Board of Directors of HdL Coren & Cone desires to designate officers that may sign on behalf of the Corporation.

NOW THEREFORE, BE IT RESOLVED that the Board of Directors of HdL Coren & Cone hereby:

Declares the following officers have signature authority:

Paula Cone,
David Schey,
Nichole Cone-Morishita,

Approved and Adopted on this 11th day of December, 2025

Paula J Cone

Paula Cone, President

12/11/2025

Date

Attest:

David Schey

David Schey, Secretary

I, David Schey , Secretary of the Board of Directors of HdL Coren & Cone, do hereby certify that the foregoing Resolution was passed, approved and adopted at a properly noticed meeting of the Board of Directors held on December 11, 2025 by the following vote:

Ayes: P. Cone; N. Cone-Morishita; B. Russell; M. Godwin; D. Schey
Noes: None
Absent:

David Schey

EXHIBIT “A”

TAB E: PROJECT PLAN

Using HdLCC's custom software, a data set of all parcels in the City or Agency will be established. This data is prepared from the Placer County Lien Date Rolls that is purchased annually in July. HdLCC updates the original County roll with any transfers in ownership, which have occurred between the lien date and the current month and updates the ownership information (name and mailing address), date of transfer, sale price, and document (deed) number monthly.

1. Reports and Analytical Services

HdLCC furnishes a variety of reports detailing property and revenue trends for the entire city and for custom defined geographic areas. These reports can be used for budgeting purposes, planning, economic development and public information. Among the reports available are top 25, 50, 100-property owner/taxpayer listings, multiple ownership properties, non-owner-occupied parcels, identification of property ownership transfers for tracking of reassessments.

HdL Coren & Cone will reconcile the annual Auditor/Controller Assessed Valuations Report and will furnish a breakdown of assessed values within the City and Successor Agency.

The identification of escaping revenue through the use of property tax data sets has been a targeted focus for HdLCC during the past 30 years. With the reduction of tax revenues through legislated Educational Revenue Augmentation Fund (ERAF), cities, counties, agencies and special districts have been focusing on ways to increase the limited resources already stretched thin.

The company will provide the following reports based on the current year lien date rolls and will provide the reports annually, quarterly or monthly as appropriate: Reports are also available from prior years if requested.

- A five-year history of the values within the City, and custom (city defined) geographic areas;
- A listing of the largest value changes, positive and negative between tax years;
- An annual parcel listing of properties with parcel number changes between tax years identifying parcel splits and combines;
- A listing of the major property owners for the City including the combined assessed values of their property and property use code designation;
- A listing and summary of property transfers which occurred since the lien date ordered by month;
- A listing of parcels that have not changed ownership since the enactment of Proposition 13;
- A comparison of property within the City by county use-code designation;
- A multiple year comparison of growth by use code designation over a 5-year period;
- A listing by parcel of new construction activity to identify non-residential parcels with new construction activity and to provide reports for use in the City's preparation of Proposition 4 and 111 State Appropriation Limit calculations;
- Calculate an estimate of property tax revenue anticipated to be received for the current fiscal year by the City based upon the initial information provided by the County and subject to modification. This estimate shall not be used to secure the indebtedness of the City.
- Analyses based on geo areas designated by the City to include assessed valuations and square footage computations for use in economic analysis and community development planning.

- Tracking of Proposition 8 reductions and restorations
- Median sale price data for current year and prior years for comparison
- Five-year budget projections for the city general fund, Successor Agency, special districts, and Vehicle License Fee in Lieu revenues. This report is interactive for tax modeling.
- Newsletter summary for public and elected distribution.

2. Identification and Correction of Errors

HdLCC has the technology, methodology and trained staff to analyze all secured parcels and unsecured assessments within the City and Successor Agency to identify costly errors resulting in the misallocation of property taxes.

The company has the ability to audit the secured and unsecured property tax rolls two ways, first reviewing the entire county to find parcels miscoded to other jurisdictions; and second, reviewing the parcels within the city, county or agency to ensure that each is coded to the appropriate taxing entity. To date, we have recovered in excess of $100 million in net revenue for our client agencies in 44 counties statewide. Our advanced technology, accuracy and track record have placed us in a unique position to be hired by cities to find additional revenues after audits have been performed by prior consultants. In addition, by filing audit results with the County Assessor in a timely manner, we can make sure that errors from previous years will not continue.

Upon approval of the contract, the company will perform an analysis of the Assessor Rolls to identify all parcels on both the secured and unsecured tax rolls and verify that parcel assessed valuations and the resulting taxes are correctly allocated to the City or its Successor Agency. This analysis is accomplished through the use of specialized computer software, assessor maps, city GIS maps, city records, other pertinent documents, and field investigations. The review will include the lien date secured and unsecured data for the current tax year as well as historical data back for a total of two (2) tax years and be performed no less than every other year.

3. Information Provided Quarterly

- A listing of property transfers that have occurred since the last report will be available through the software provided and updated on a monthly basis. This data will include the new owner/seller of the property, new mailing address if not the situs address, the date of sale, the sale price when verified, document number, and transaction type.
- The average and median single family sale price report is sent to all clients quarterly and includes the same data for all client agencies within the same County.

4. Property Tax Application and Database

HdLCC provides a web-based software application to clients as a user-friendly tool to access the City's property tax data. HdLCC provides updates to the data portion of the product on a monthly basis to reflect changes in ownership, updated appeals filings, and deed recordings.

As modifications and enhancements are made to the program, clients receive the enhanced version of the software at no additional cost.

Training will be provided to city staff within the first two months after the execution of the agreement for property tax management and audit services and is available annually for new staff members or staff requiring a refresher course. If additional training sessions are required, the fees in the compensation section under hourly fees will be charged.

TAB E: PROJECT PLAN

The help manual available within the program is easy to navigate and user friendly. HdLCC staff is available Monday through Friday, 8 a.m. to 5 p.m. to answer questions and assist staff on the use of the software. Assistance is available either by phone or via email.

The City will be granted a site license for the application, providing no limit to the number of users. HdLCC will not charge an annual maintenance fee for the software program. Periodically, as the program changes and product enhancements are developed, upgrades or new releases of the software are issued at no additional cost to the client.

5. Successor Agency Services

Successor Agency Services including but not limited to:

- Annual tax increment projections and, as requested, cash flow analysis for the Successor Agency by Project Area.
- Review of Redevelopment Obligation Payment Schedules (ROPS) as requested.
- Provide property tax information to the Oversight Board at the direction of the Successor Agency.
- Provide access to the Oversight Board to City and former redevelopment agency documents at the direction of the Successor Agency.
- Monitor the County distribution of tax-sharing revenues to the taxing entities of the former redevelopment agency.
- Advice and consultation on the City/Successor Agency's preparation of required reports, such as revenue projections; review of Recognized Obligation Payment Schedules (ROPS), submittals to the Oversight Board and/or County or State agencies, and new or revised legislative requirements.
- Analysis of legislative and judicial matters impacting Redevelopment Property Tax Trust Fund (RPTTF) revenues to the Successor Agency and to the City.

6. Proposed Work Plan/Staffing Schedule

The methodology that the company follows in identifying, correcting and recovering property tax errors includes the following:

Task I	Establishment of County Data Set
Task II	Identify and Correct Errors
Task III	Prepare Reports
Task IV	Ongoing Analysis

During the term of the contract, we serve as the resource staff to the City on questions relating to property tax. This includes being "on-call" to assist with any property tax issues. On-going consultation would include but not be limited to inquiries resolved through use of the City data base. All requests for information based upon the County's property tax data sets are provided without additional costs. Special reports, additional research, or requests requiring additional computer programming may entail some additional costs. Attendance at City and/or Successor Agency meetings will be billed at our hourly rates. Optional services will only be provided upon written notice to proceed by the City.

TAB E: PROJECT PLAN

Timeline for Property Tax Analysis and Audit Services

- County assessment rolls are purchased annually in July.
- The property data program will be available for access via the internet within 30 days of the execution of the agreement. Parcel data will be updated monthly to include the most current ownership information due to parcel transfers.
- The first secured audit will be performed and submitted to the Assessor no later than 60 days from the date of the contract. Future audits will be performed no less than once every two years and submitted no later than March 1st.
- The unsecured audits for the City will be completed and submitted to the County Assessor for corrective action within 120 days of receipt of county rolls. The City will receive file copies of submittals simultaneous with submissions to the County Assessor.
- Data collection from the county assessor's and auditor controller's offices for reports is performed in August and September each year and preliminary reports will be delivered to the City prior to the end of January annually.
- The final tax ratio percentages are available from the auditor controller's office annually in February/March. Final reports will be prepared and delivered prior to the end of April annually.

7. Legislative Updates

HdLCC monitors and reports on issues related to property tax and coordinates with City Staff in connection with passed and potential property tax legislation and regulations.

8. Consultation

Annual reports presented by a principal or associate of the firm to any City staff member interested in the detailed analysis including property tax revenue estimates performed by HdLCC of the City's annual property assessed values released by the assessor. Since property data is not confidential, these reports can be shared with staff. Understanding the budget implications of the data released in late summer and presented in late Fall is timely for mid-year budget reviews.

HdLCC also serves as the City's property tax staff for consultation and questions related to budgeting, revenue collection, the mechanics of property tax allocation and potential changes in the legislation that may impact local agencies. Training is provided free of charge on the use of the web-based software which is updated monthly with ownership changes and appeal information where available.

EXHIBIT “B”

TAB F: COST PROPOSAL

A. Property Tax Services

Based on the number of parcels within Roseville (59,447), our standard fixed fee (the "Base Fixed Fee") for property tax services is **$6,875 per quarter**, ($27,500 per year).

In addition to the Base Fixed Fee, we will receive a contingent fee of 25% of net tax revenues recovered for the City through the audits we perform. Net tax revenues mean the taxes received by the City through our audit efforts.

B. Additional Services

Work that is requested by the City that is beyond the scope of services in this proposal shall be charged on a time and material basis. No work shall be performed without prior written approval by the City. Fees for these services are as follows:

	Hourly Rate
Partner	$250
Principal	$225
Programmer	$200
Associate	$175
Senior Analyst	$125
Analyst	$90
Administrative	$70



BREAKDOWN OF COSTS

	Task	Staff	Annual Hours	Hourly Rate	Extended Rate
1	Acquisition of data from the Assessor, Auditor Controller and Clerk of the Board	Administrative	15	$70	$1,050
2	Data decoded and read into HdLCC system	Programmer	15	$200	$3,000
3	Post updated data set on Web-based HdLCC Property Tax Portal	Programmer	8	$200	$1,600
4	Secured and unsecured audits performed	Administrative	16	$70	$1,120
5	Data Reconciliation and processing for deliverables	Administrative	10	$70	$700
6	Print and prepare report portfolios and electronic deliverables	Administrative	10	$70	$700
		Programmer	10	$200	$2,000
7	Analyze information for meeting, prepare newsletter, produce additional handouts, prepare reports for staff meeting	Principal	10	$225	$2,250
8	Update database with sales transactions monthly	Analyst	36	$90	$3,240
9	Revenue projections	Analyst	10	$90	$900
		Programmer	5	$200	$1,000
		Principal	5	$225	$1,125
10	Residual Revenue Projections	Analyst	5	$90	$450
		Principal	5	$225	$1,125
11	Addendum Report preparation	Administrative	10	$70	$700
12	Ongoing requests, software training, special projects	Administrative	15	$70	$1,050
		Analyst	15	$90	$1,350
		Programmer	15	$200	$3,000
		Principal	15	$225	$3,375
13	Legislative Updates	Analyst	5	$90	$450
		Principal	5	$225	$1,125
		Total Hours	**240**		**$31,310**

City Council Communication

Meeting Date: 3/4/2026
Item #: VII.18
File #: 0102-10
Item ID: 2026-145

Title:	Resolution - Deneen Blair
Contact:	Arleta Wagenhals 916-774-5200 amswagenhals@roseville.ca.us

SUMMARY

Commend Deneen Blair, who is retiring from the Environmental Utilities Department, for more than thirty-one years of outstanding service and dedication to the City of Roseville, congratulate her for her many accomplishments, and wish her a long, healthy, and fulfilling retirement.

RECOMMENDATION

Commend Deneen Blair, who is retiring from the Environmental Utilities Department, for more than thirty-one years of outstanding service and dedication to the City of Roseville, congratulate her for her many accomplishments, and wish her a long, healthy, and fulfilling retirement.

BACKGROUND

Not Applicable

FISCAL IMPACT

Not Applicable

ENVIRONMENTAL REVIEW

The California Environmental Quality Act (CEQA) does not apply to activities that will not result in a direct or reasonably foreseeable indirect physical change in the environment, or is otherwise not considered a project as defined by CEQA Statute §21065 and CEQA State Guidelines §15060(c)(3) and §15378. Council approval of a resolution meets the above criteria and is not subject to CEQA. No additional environmental review is required.

CITY COUNCIL STRATEGIC PLAN/OVERARCHING GOALS

5. Support community engagement and advocacy
6. Deliver exceptional City services

Respectfully Submitted,
Arleta Wagenhals, City Clerk Technician

Carmen Avalos, City Clerk

ATTACHMENTS:

1. Resolution Deneen Blair

REVIEWERS:

Arleta Wagenhals, City Clerk Department	Created/Initiated - 2/17/2026
Dennis Kauffman, City Manager Department - Assistant City Manager	Approved - 2/17/2026
Michelle Sheidenberger, City Attorney Department	Final Approval - 2/18/2026

Resolution

WHEREAS, Deneen Blair began her distinguished career with the City of Roseville on March 15, 1994 as a Records Clerk for the Police Department, providing exemplary public service marked by integrity and collaboration; and

WHEREAS, throughout her 31-year career, she served in key roles across the Police Department, Fire Department, and Environmental Utilities, demonstrating versatility, leadership, and a lasting impact on city operations; and

WHEREAS, she advanced community engagement and public safety through programs such as the Citizens Academy, Volunteer Program, and Combat Auto Theft Program, and played a vital role in neighborhood revitalization efforts, including establishing the Roseville Coalition of Neighborhood Associations (RCONA); and

WHEREAS, she earned numerous commendations for her outstanding service, including the Pride of Roseville Team Award and recognition for contributions to major community events such as Cops Care Kids Camp and Summerfest; and

WHEREAS, she improved operational processes by engineering the transition to an updated alarm ordinance and actively representing the City through outreach programs such as National Night Out and Citizens Awareness Academy; and

WHEREAS, after transferring to Environmental Utilities in 2009, she was promoted to Administrative Technician on November 29, 2011, in the Asset Management Group, becoming a trusted subject matter expert in enterprise systems and reporting tools; and

WHEREAS, on July 3, 2019, she was reclassified as an ERP Analyst, leading the completion of the Enterprise Asset Management capital improvement project, transitioning EAM from implementation to maintenance, and partnering with IT teams to implement and sustain the Maximo system, streamlining operations, reducing manual processes, and ensuring successful system upgrades; and

WHEREAS, her persistence and collaborative spirit bridged gaps between IT, CIS, and GIS teams, fostering partnerships that strengthened City operations and created a roadmap for future improvements; and

WHEREAS, she consistently embraced innovation, expanded her expertise, and pursued creative solutions that enhanced City operations and inspired colleagues.

NOW, THEREFORE, BE IT RESOLVED BY THE COUNCIL OF THE CITY OF ROSEVILLE, CALIFORNIA, that **DENEEN BLAIR** be commended for more than thirty-one years of outstanding service and dedication to the City of Roseville, congratulated for her many accomplishments, and wished a long, healthy, and fulfilling retirement.

SIGNED and APPROVED this 4th day of March 2026.

CITY OF ROSEVILLE
INCORPORATED APRIL 10, 1909

KRISTA BERNASCONI, MAYOR

City Council Communication

Meeting Date: 3/4/2026
Item #: VII.19
File #: 0102-03
Item ID: 2026-141

Title:	Minutes of Prior Meetings
Contact:	Adilia Keller 916-774-5265 amkeller@roseville.ca.us

SUMMARY

Staff recommends approval of the minutes of the February 4, 2026, Special Closed Session Meeting and minutes of the February 18, 2026, City Council Meeting.

RECOMMENDATION

Approve the minutes of the February 4, 2026, Special Closed Session Meeting and minutes of the February 18, 2026, City Council Meeting.

BACKGROUND

Not applicable.

FISCAL IMPACT

There is no fiscal impact associated with this request.

ENVIRONMENTAL REVIEW

The California Environmental Quality Act (CEQA) does not apply to activities that will not result in a direct or reasonably foreseeable indirect physical change in the environment, or is otherwise not considered a project as defined by CEQA Statute §21065 and CEQA State Guidelines §15060(c)(3) and §15378. The City Council minutes are not subject to CEQA. No additional environmental review is required.

CITY COUNCIL STRATEGIC PLAN/OVERARCHING GOALS

6. Deliver exceptional City services

Respectfully Submitted,
Adilia Keller, City Clerk Technician

Carmen Avalos, City Clerk

ATTACHMENTS:

1. 2nd Closed Session - 2-4-2026
2. February 18, 2026 City Council Meeting_Minutes_Preview

REVIEWERS:

Arleta Wagenhals, City Clerk Department — Created -
Katrina Six, City Clerk Department

Krista Bernasconi, Mayor
Karen Alvord, Vice Mayor
Bruce Houdesheldt, Councilmember
Tracy Mendonsa, Councilmember
Pauline Roccucci, Councilmember
Dominick Casey, City Manager
Michelle Sheidenberger, City Attorney
Carmen Avalos, City Clerk

MINUTES

City Council Special Closed Session Meeting
February 4, 2026
7:30 PM
Roseville Electric Building, First Floor Conference Room
116 S. Grant Street

I. CALL TO ORDER

Mayor Bernasconi called the meeting to order at 7:52 p.m.

II. ROLL CALL

Present: Vice Mayor Alvord, Councilmember Houdesheldt, Councilmember Roccucci, Mayor Bernasconi.
Absent: Councilmember Mendonsa.

III. PUBLIC COMMENTS

No public comments received.

IV. CLOSED SESSION

1. Conference with Labor Negotiator

Summary: Pursuant to California Government Code Section 54957.6
Chief Negotiator: Timothy Davis, Burke, Williams & Sorensen, LLP
Agency designated representative: Stacey Peterson, Human Resources Director
Employee Organization: Roseville Firefighters, Local 1592

CONTACT: Stacey Peterson 916-774-5374 slpeterson@roseville.ca.us

Closed Session Discussion: No reportable action taken.

V. ADJOURNMENT

Mayor Bernasconi adjourned the meeting at 8:19 p.m.

Krista Bernasconi, Mayor
Karen Alvord, Vice Mayor
Bruce Houdesheldt, Councilmember
Tracy Mendonsa, Councilmember
Pauline Roccucci, Councilmember
Dominick Casey, City Manager
Michelle Sheidenberger, City Attorney
Carmen Avalos, City Clerk

MINUTES

City Council Regular Meeting
February 18, 2026
6:00 PM
Roseville Electric Building,
116 S. Grant Street, 1st Floor

I. CALL TO ORDER

Mayor Bernasconi called the meeting to order at 6:01 p.m.

II. ROLL CALL

Present: Vice Mayor Alvord, Councilmember Houdesheldt, Councilmember Mendonsa, Councilmember Roccucci, Mayor Bernasconi.

III. PLEDGE OF ALLEGIANCE

Center High School Student Jayden Johnson Nimms led the Pledge of Allegiance.

IV. MEETING PROCEDURES

City Clerk Carmen Avalos announced the procedures for addressing the City Council.

V. PUBLIC COMMENTS

This is the first opportunity to make a public comment on non-agenda items.

Sanjana Singh spoke on Sewa Diwalia Food Drive.

Shreya Deshpande spoke on Hindu Swayamevak Sangh Health for Humanity yoga event.

Laura Burns spoke on a petition to limit trucks coming through Emerald Creek - Stoneridge neighborhood.

Celine Strapman spoke on lack of maintenance on sidewalks in the Northwest area.

Julia Sweeney spoke on the lack of maintenance on sidewalks, sound walls, and trees in the Northwest area.

Carol Weaver spoke on the dead and dying plants, sidewalks and sound walls in the Northwest area.

VI. CONSENT CALENDAR

Motion by Councilmember Mendosa, seconded by Councilmember Roccucci, to approve the Consent Calendar as recommended. The motion passed.

Ayes: Vice Mayor Alvord, Councilmember Houdesheldt, Councilmember Mendonsa, Councilmember Roccucci, Mayor Bernasconi.

1. Placer Valley Tourism - 2026 Strategic Plan and Budget (FINANCE DEPARTMENT)

Summary: Staff recommends approval of the 2026 Placer Valley Tourism Strategic Plan and the 2026 Placer Valley Tourism Budget. There is no fiscal impact to the City associated with this recommendation. Funding for these activities is derived from room night assessments collected from hotels in Lincoln, Rocklin and Roseville. This assessment is separate and distinct from the 10% Transient Occupancy Tax collected by the City of Roseville from Roseville hotels.

CONTACT: Jeannine Thrash 916-774-5473 jthrash@roseville.ca.us

The City Council will consider the recommendation to:

a. Adopt Resolution No. 26-037 approving the 2026 Placer Valley Tourism Strategic Plan and the 2026 Placer Valley Tourism Budget.

2. Audit Services Agreement (FINANCE DEPARTMENT)

Summary: Staff recommends approving an audit services agreement with CliftonLarsonAllen, LLP in the amount of $509,560 to provide financial auditing services for fiscal years 2025-26, 2026-27, and 2027-28. Funding for these services is included in the budgets of Finance; Parks, Recreation & Libraries; the Other Post-Employment Benefits Trust; Housing; Electric; the Roseville Natural Gas Finance Authority; Transit; Youth Development; the South Placer Wastewater Authority; and the Bizz Johnson Highway Interchange Joint Powers Authority.

CONTACT: Teri Quinlan 916-774-5316 tquinlan@roseville.ca.us

The City Council will consider the recommendation to:

a. Adopt Resolution No. 26-036 approving an audit services agreement, by and between the City of Roseville and CliftonLarsonAllen, LLP, and authorizing the City Manager to execute it on behalf of the City of Roseville.

3. Sierra Vista Specific Plan Grading of Bike Trail in FD-81 and FD-82A Project - New Capital Improvement Project Approval, Reimbursement Agreement, and Budget Adjustment (PUBLIC WORKS DEPARTMENT - TRANSPORTATION)

Summary: Staff recommends approval of the establishment of a new Capital Improvement Project and approval of a reimbursement agreement with John Mourier Construction, Inc. in the amount of $57,357 to provide grading of the multi-use trail in Parcels FD-81 and FD-82A in the Sierra Vista Specific Plan. Staff also recommends approval of a budget adjustment of $57,357 for

the grading. Funding is available from bike trail development fees collected for the Sierra Vista Specific Plan. No General Fund resources will be used for this project.

CONTACT: Suzanne Engelke 916-746-1289 sengelke@roseville.ca.us

The City Council will consider the recommendation to:

a. Approve the establishment of a new Capital Improvement Project - Sierra Vista Specific Plan Grading of Bike Trail in FD-81 and FD-82A Project; and

b. Adopt Resolution No. 26-030 approving an reimbursement agreement, by and between the City of Roseville and John Mourier Construction, Inc., and authorizing the City Manager to execute it on behalf of the City of Roseville; and

c. Adopt Ordinance No. 7042 authorizing certain amendments to the fiscal year 2025-26 budget and declaring this ordinance to be immediately effective as an appropriation measure.

4. **Roseville Parkway Widening Project — Adoption of Initial Study/Mitigated Negative Declaration, Adoption of the Mitigation Monitoring and Reporting Program, Project Approval, Approval of Plans and Specifications, and Authorization to Call for Bids** (PUBLIC WORKS DEPARTMENT - ENGINEERING - CITY PROJECT'S)

Summary: Staff recommends approval of the Initial Study/Mitigated Negative Declaration and the Mitigation Monitoring and Reporting Program for the Roseville Parkway Widening Project, approval of the project described therein, approval of the plans and specifications for Roseville Parkway Widening Project - Phase 1, and authorization for staff to call for bids. The project scope of Phase 1 consists of widening portions of Roseville Parkway from West Drive to Creekside Ridge Drive and at the Pleasant Grove Boulevard intersection. Improvements also include modifications to existing traffic signals, sidewalks, curb and gutter, updated signing and striping, and necessary utility adjustments. The construction of the project is estimated to cost $3.5 million and will be primarily funded by the special tax revenue generated in the North Central Roseville Community Facilities District No. 1. No General Fund resources will be used for the project.

CONTACT: Karen Vences 916-774-5412 kavences@roseville.ca.us

The City Council will consider the recommendation to:

a. Adopt Resolution No. 26-033 adopting the Initial Study/Mitigated Negative Declaration and approving the Mitigation Monitoring and Reporting Program for the Roseville Parkway Widening Project; and

b. Approve the project as described therein; and

c. Approve the plans and specifications for Roseville Parkway Widening - Phase 1 and authorize staff to call for bids.

5. **Microtransit Vehicles Purchase - Budget Adjustment** (PUBLIC WORKS DEPARTMENT - TRANSPORTATION)

Summary: Staff recommends approval of a budget adjustment in the amount of $118,024 to align project funding to available grant and local match funding for the procurement of Ford E-Transit 350 vans. Roseville Transit is currently purchasing twelve (12) Ford E-Transit 350 vans through the CA State (CalACT #20-01) procurement. There are two existing City projects with grant funds secured for this procurement. This budget adjustment will increase the available funding within the Microtransit Vehicle and Charger Purchase project for an additional federal grant that was received for this procurement. Federal funds in the amount of $98,353 are being applied, along with an additional Local Transportation Fund grant match of $19,671. These funds will increase the total project budget by $118,024 to a total project budget of $818,024. The additional funding will go towards aftermarket add-ons including radios and monitoring cameras. There is no impact to the General Fund.

CONTACT: Zachary Presley 916-774-5365 zpresley@roseville.ca.us

The City Council will consider the recommendation to:

a. Adopt Ordinance No. 7041 authorizing certain amendments to the fiscal year 2025-26 budget and declaring this ordinance to be immediately effective as an appropriation measure.

6. **Western Systems Power Pool Agreement Collateral Annex** (ELECTRIC DEPARTMENT - FINANCIAL & ADMINISTRATIVE)

Summary: Staff recommends approval of the Western Systems Power Pool (WSPP) Collateral Annex, including the Cover Sheet Elections, with Karbone Energy LLC (Karbone). The documents supplement the WSPP Agreement previously executed by the City and establish industry-standard credit and collateral provisions that would apply to any future wholesale physical power transactions with Karbone under the WSPP framework. There is no cost associated with the execution of these documents.

CONTACT: Patrick Zanardelli 916-774-5673 pzanardelli@roseville.ca.us

The City Council will consider the recommendation to:

a. Adopt Resolution No. 26-031 approving the Western Systems Power Pool Collateral Annex and Cover Sheet Elections, by and between the City of Roseville and Karbone Energy LLC, and authorizing the City Manager to execute it on behalf of the City of Roseville.

7. **Holt Substation Civil Design - Professional Design Services Agreement** (ELECTRIC DEPARTMENT - ENGINEERING)

Summary: Staff recommends approval of a professional design services agreement with Mesa Associates, Inc. in the amount of $493,074.80 to provide civil design services for the design of the Holt Substation. Staff additionally requests authority to approve unforeseen change orders up to 5% of the cost, or $24,653.74, for a total of $517,728.54, with funding included in the Electric Department's FY2025-26 budget in the Electric Fund.

CONTACT: Vincent Bottoni 916-774-5641 vbottoni@roseville.ca.us

The City Council will consider the recommendation to:

a. Adopt Resolution No. 26-027 approving a professional design services agreement, by and between the City of Roseville and Mesa Associates, Inc., and authorizing the City Manager to execute it on behalf of the City of Roseville.

8. Environmental Energy Products - Brokerage Services Agreement Amendment (ENVIRONMENTAL UTILITIES DEPARTMENT - WASTEWATER)

Summary: Staff recommends approval of the amendment to the Brokerage Enabling Agreement for Environmental Energy Products with Equus Energy Group, LLC. This amendment allows Equus to add brokerage of the Renewable Identification Numbers credits provided by the Environmental Protection Agency for fuel generated by the Pleasant Grove Wastewater Treatment Plant's Energy Recovery Facility. This work will be funded through a portion of the payments received for the credits.

CONTACT: Jason Fick 916-746-1940 jfick@roseville.ca.us

The City Council will consider the recommendation to:

a. Adopt Resolution No. 26-035 approving an amendment to brokerage services agreement between the City of Roseville and Equus Energy Group, LLC, and authorizing the City Manager to execute it on behalf of the City of Roseville.

9. Solid Waste Compliance Software – Professional Services Agreement Amendment (ENVIRONMENTAL UTILITIES DEPARTMENT - STRATEGIC AFFAIRS DIVISION)

Summary: Staff recommends approval of an amendment to the existing professional services agreement with SMART Compliance to incorporate the required Information Technology (IT) terms, cybersecurity provisions, and a Technology Security and Standards Matrix that were inadvertently omitted from the original agreement approved on November 5, 2025. The amendment does not increase the contract amount, which remains $110,500 and is included in the FY2025–26 Waste Services Operations Fund budget. The project continues to be fully funded through the CalRecycle SB 1383 Local Assistance Grant.

CONTACT: Michelle White 916-774-5774 mjwhite@roseville.ca.us

The City Council will consider the recommendation to:

a. Adopt Resolution No. 26-029 approving a first amendment to the professional services agreement, by and between the City of Roseville and SMART Compliance, and authorizing the City Manager to execute it on behalf of the City of Roseville.

10. Building Plan Check and Inspection Services — On-Call Professional Services Agreement Amendment and Budget Adjustment (DEVELOPMENT SERVICES DEPARTMENT - BUSINESS SERVICES DIVISION)

Summary: Staff recommends approval of the sixth amendment to the on-call professional services agreement with Bureau Veritas North America, Inc., for building and fire life safety plan review and inspection services, increasing contract authority by $250,000 for FY2025-26 and bringing the total contract value to $750,000. Staff also recommends approval of a budget adjustment totaling $500,000 for FY2025-26, with $250,000 allocated to the Development Services budget and $250,000 allocated to the Fire budget. The need for additional contract and budget authority is driven by increased inspection activity, primarily associated with the Bosch Semiconductor Plant construction, as well as anticipated plan review services for tenant improvements at the Galleria Mall. Funding is included in the Development Services and Fire budgets and is fully recoverable through permit fee revenue. While expenditures will increase due to increased workload, corresponding revenues will also increase, resulting in no net impact on the General Fund.

CONTACT: Stacie Marchetti 916-774-5278 smarchetti2@roseville.ca.us

The City Council will consider the recommendation to:

a. Adopt Resolution No. 26-032 approving a sixth amendment to professional services agreement, by and between the City of Roseville and Bureau Veritas North America, Inc., and authorizing the City Manager to execute it on behalf of the City of Roseville; and

b. Adopt Ordinance No. 7043 authorizing certain amendments to the fiscal year 2025-26 budget and declaring this ordinance to be immediately effective as an appropriation measure.

11. 1751 Pleasant Grove Boulevard - Grocery Outlet Parcel Map (DEVELOPMENT SERVICES DEPARTMENT - ENGINEERING DIVISION)

Summary: Staff recommends approval of the Grocery Outlet parcel map. Engineering has completed its review of the parcel map and found that it is in compliance with the approved tentative map. This map will create 3 lots for future development. The actions requested have no fiscal impact to the City's General Fund.

CONTACT: Ed Winston 916-774-5432 ewinston@roseville.ca.us

The City Council will consider the recommendation to:

a. Approve the parcel map on file with the City Clerk; and

b. Accept, on behalf of the public, the public easements and right of way offered thereon for dedication.

12. Downtown Roseville Security Patrol - Professional Services Agreement Amendment (POLICE DEPARTMENT)

Summary: Staff recommends approval of a first amendment to a professional services agreement with Universal Protection Service, LP dba Allied Universal Security Services in the amount of $166,411.59 to continue to provide private security patrols in the Downtown and

Historic Old Town areas to assist in providing public safety. Funding is included in the Police Department's FY2025-26 operating budget in the General Fund.

CONTACT: Mark Peinado 916-774-5021 mcpeinado@roseville.ca.us

The City Council will consider the recommendation to:

a. Adopt Resolution No. 26-028 approving a first amendment to professional services agreement, by and between the City of Roseville and Universal Protection Service, LP dba Allied Universal Security Services, and authorizing the City Manager to execute it on behalf of the City of Roseville.

13. Second Reading - 2025 Speed Limit Update - Roseville Municipal Code Amendment (PUBLIC WORKS DEPARTMENT - ENGINEERING - TRAFFIC ENGINEERING)

Summary: Staff recommends approval of an ordinance for second reading amending Section 11.28.010 of Chapter 11.28 of Title 11 of the Roseville Municipal Code regarding change in speed limits set by state law.

CONTACT: Jerome Pastor 916-746-1352 jpastor@roseville.ca.us

The City Council will consider the recommendation to:

a. Adopt Ordinance No. 7045 amending Section 11.28.010 of Chapter 11.28 of Title 11 of the Roseville Municipal Code regarding change in speed limits set by state law.

14. Legal Services Agreement (CITY ATTORNEY DEPARTMENT)

Summary: Staff recommends approval of an agreement with The Law Offices of Lisa Prince, dba The Prince Firm, to provide legal services. Expenses will be paid by the Human Resources Department's or the City Attorney's operating budget in the General Fund, or by other departments and funds as appropriate.

CONTACT: Jonathan Levy 916-774-5325 jlevy@roseville.ca.us

The City Council will consider the recommendation to:

a. Adopt Resolution No. 26-034 approving an agreement for legal services, by and between the City of Roseville and The Law Offices of Lisa Prince, dba The Prince Firm, and authorizing the City Manager to execute it on behalf of the City of Roseville.

15. Staffing Changes and Administrative Corrections to Labor Market Adjustments (HUMAN RESOURCES DEPARTMENT)

Summary: As part of an ongoing assessment of the appropriate staffing levels to provide a high level of service to the community, staff recommends that the City Council adopt ordinances to approve the administrative corrections to the Roseville Police Association (RPA) A & B salary schedules reflecting the labor market adjustments, updating the salary percentage change to Animal Services Officers, Animal Services Supervisor and Community Services Officer I/II; and to

the Management A & B salary schedules reflecting the administrative correction to the attached salary schedule for Business Systems Supervisor, Database Supervisor and Information Technology Supervisor. Updates to the City allocation schedule reflect the addition of two (2), regular, full-time positions consisting of one (1) Police Lieutenant and one (1) Wastewater Treatment Plant Operator Grade III 8hrs; and the deletion of one (1) regular, full-time Wastewater Treatment Plant Operator Grade III 24hrs. The estimated total cost of the recommended position adjustments to the General Fund will be $112,473 for the remainder of FY2025-26, which can be absorbed by existing appropriations; therefore, no budget adjustment is required at this time. There will be a Wastewater Operations Fund savings of $4,583 for the remainder of FY2025-26. Beyond this fiscal year, the recommended changes have an annual ongoing impact of $306,146 to the General Fund and cost savings of $13,240 to the Wastewater Operations Fund.

CONTACT: Macy Dippert 916-774-5215 mdippert@roseville.ca.us

The City Council will consider the recommendation to:

a. Adopt Ordinance No. 7046 amending Ordinance No. 7022, the salary Ordinance for Non-Sworn Employees represented by the Roseville Police Association, as amended by Appendix "G" to be effective January 10, 2026, as an urgency measure; and

b. Adopt Ordinance No. 7047 amending Ordinance No. 7024, the salary Ordinance for Management Employees, as amended by Appendix "O" to be effective January 10, 2026, as an urgency measure; and

c. Approve the attached city-wide allocation schedule effective February 21, 2026.

16. Proclamation - Government Communicators Day

Summary: Proclaim February 20, 2026**,** as Government Communicators Day and encourage all residents to recognize Roseville government communications employees who have dedicated their careers to ensure the City of Roseville has effective, impactful, and successful communication strategies that resonate and are relevant.

CONTACT: Arleta Wagenhals 916-774-5200 amswagenhals@roseville.ca.us

17. Proclamation - Procurement Month

Summary: Proclaim March 2026 as Procurement Month and urge all citizens to join the City of Roseville in recognizing the contribution and importance of our Purchasing Division employees and their impact within business, industry and government.

CONTACT: Arleta Wagenhals 916-774-5200 amswagenhals@roseville.ca.us

18. Minutes of Prior Meetings (CITY CLERK DEPARTMENT)

Summary: Staff recommends approval of the minutes of the January 28, 2026 City Council Special Closed Meeting, and February 4, 2026 City Council Legislative Platform Workshop Meeting, City Council Special Closed Session Meeting and City Council Meeting.

CONTACT: Adilia Keller 916-774-5265 amkeller@roseville.ca.us

The City Council will consider the recommendation to:

a. Approve the minutes of the January 28, 2026 City Council Special Closed Meeting, and February 4, 2026 City Council Legislative Platform Workshop Meeting, City Council Special Closed Session Meeting and City Council Meeting.

END OF CONSENT CALENDAR

VII. PRESENTATIONS/REPORTS

19. Salary Schedule Ordinance for City Council Appointed Positions, Amendments to Employment and Personal Services Agreements (HUMAN RESOURCES DEPARTMENT)

Summary: Staff recommends approval of the City Council Appointed Positions salary schedule reflecting a four and one-half percent (4.5%) percent salary increase for the City Attorney and an eight and one-half percent (8.5%) salary increase for the City Manager, effective February 21, 2026, and a three percent (3%) general wage increase effective the first full pay period in January 2027, at the same time the same increase is processed for other management employees. In addition, staff recommends Council approve a Third Amendment to the Employment and Personal Services agreement with Michelle Sheidenberger and a First Amendment to the Employment and Personal Services agreement with Dominick Casey to reflect that evaluations will be completed at least every two (2) years. Dominick Casey's agreement will also revise the vehicle allowance benefit to a vehicle allowance and unreimbursed business expenses allowance with an $800/month increase. The City Attorney and City Manager operating budgets have sufficient funds available to cover the additional salary and benefits costs for the current fiscal year, and the ongoing annual costs of $21,845 and $57,415, respectively, will be incorporated in the proposed FY2026-27 City Attorney and City Manager budgets in the General Fund.

CONTACT: Stacey Peterson 916-774-5374 slpeterson@roseville.ca.us

The City Council will consider the recommendation to:

a. Adopt Ordinance No. 7044 amending Ordinance No. 6900 the salary ordinance for City Council appointed positions, as amended by appendix "T" to be effective February 21, 2026 as an urgency measure; and

b. Adopt Resolution No. 26-038 approving a third amendment to employment and personal services agreement between the City of Roseville and Michelle Sheidenberger, and authorizing the Mayor to execute it on behalf of the City of Roseville; and

c. Adopt Resolution No. 26-039 approving a first amendment to employment and personal services agreement between the City of Roseville and Dominick Casey, and authorizing the Mayor to execute it on behalf of the City of Roseville.

d. Approve a three percent (3%) general wage increase effective the first full pay period in

January 2027 for the City Attorney and City Manager, at the same time the same increase is processed for other management employees.

Human Resources Director Stacey Peterson made the presentation to the City Council.

Julia Sweeney spoke on a comparability study on other cities' pay and the labor market.

Glenda Hay spoke on a funding shortfall for landlords on the Housing Choice Voucher program.

Carol Weaver spoke on the City Manager's salary increase and funding for the maintenance funding for her neighborhood.

Motion by Councilmember Houdesheldt, seconded by Mayor Bernasconi, to Adopt Ordinance No. 7044 amending Ordinance No. 6900 the salary ordinance for City Council appointed positions, as amended by appendix "T" to be effective February 21, 2026 as an urgency measure; and Adopt Resolution No. 26-038 approving a third amendment to employment and personal services agreement between the City of Roseville and Michelle Sheidenberger, and authorizing the Mayor to execute it on behalf of the City of Roseville; and Adopt Resolution No. 26-039 approving a first amendment to employment and personal services agreement between the City of Roseville and Dominick Casey, and authorizing the Mayor to execute it on behalf of the City of Roseville. Approve a three percent (3%) general wage increase effective the first full pay period in January 2027 for the City Attorney and City Manager, at the same time the same increase is processed for other management employees. The motion passed.

Ayes: Vice Mayor Alvord, Councilmember Houdesheldt, Councilmember Mendonsa, Councilmember Roccucci, Mayor Bernasconi.

20. General Municipal Election Ballot Measure - Council Compensation Adjustment and Inflation Limitation Measure - November 3, 2026 (CITY ATTORNEY DEPARTMENT)

Summary: Staff recommends City Council adopt a resolution submitting a ballot measure for the Council Compensation Adjustment and Inflation Limitation Measure to the voters of the City of Roseville at the next General Municipal Election to be held on November 3, 2026; requesting Placer County Board of Supervisors consolidate the election with any other election conducted on the same date; and requesting election services be provided by the Placer County Clerk to submit a ballot measure for the Council Compensation Adjustment and Inflation Limitation Measure to the voters of the City of Roseville.

CONTACT: Joseph Speaker 916-774-5325 jspeaker@roseville.ca.us

The City Council will consider the recommendation to:

a. Adopt Resolution No. 26-040 submitting a ballot measure for the Council Compensation Adjustment and Inflation Limitation Measure to the voters of the City of Roseville at the next General Municipal Election to be held on November 3, 2026; requesting Placer County Board of Supervisors consolidate the election with any other election conducted on the same date; and

requesting election services be provided by the Placer County Clerk to submit a ballot measure for the Council Compensation Adjustment and Inflation Limitation Measure to the voters of the City of Roseville.

Assistant City Attorney Joe Speaker made the presentation to the City Council.

Paul Alland spoke about the cities included in the survey.

Jeff Short spoke about the work and time the councilmembers dedicate to serving on the City Council.

Motion by Councilmember Houdesheldt, seconded by Councilmember Mendonsa, to Adopt Resolution No. 26-040 submitting a ballot measure for the Council Compensation Adjustment and Inflation Limitation Measure to the voters of the City of Roseville at the next General Municipal Election to be held on November 3, 2026; requesting Placer County Board of Supervisors consolidate the election with any other election conducted on the same date; and requesting election services be provided by the Placer County Clerk to submit a ballot measure for the Council Compensation Adjustment and Inflation Limitation Measure to the voters of the City of Roseville. The motion passed.

Ayes: Vice Mayor Alvord, Councilmember Houdesheldt, Councilmember Mendonsa, Mayor Bernasconi.
Noes: Councilmember Roccucci.

VIII. PUBLIC COMMENTS

This is the second opportunity to make a public comment on non-agenda items.

No public comment received.

IX. STAFF/COUNCIL REPORTS

Northern California Power Association Meeting - Councilmember Roccucci reported on attendance.

Placer County Air Pollution Control District - Vice Mayor Alvord reported.

Western Placer Waste Management Authority Meeting - Councilmember Houdesheldt reported on attendance.

Placer County Transportation Planning Agency Meeting - Councilmember Houdesheldt reported on attendance.

Councilmember Houdesheldt reported on various community events.

Roseville Committee Activity League - Mayor Bernasconi reported on attendance.

Mayor Bernasconi reported on various community events.

X. ADJOURNMENT

Mayor Bernasconi adjourned the meeting at 7:15 p.m.

City Council Communication

Meeting Date: 3/4/2026
Item #: VIII.20
File #: 0102-16
Item ID: 2026-111

Title:	Council Discretionary Funds Request - Volunteers of America, Northern California & Northern Nevada
Contact:	Heather Blanco 916-746-1171 hblanco@roseville.ca.us

SUMMARY

Memo from Executive Assistant Heather Blanco and City Clerk Carmen Avalos requesting the City Council consider a request for a $3,000 sponsorship from Council Discretionary Funds for Volunteers of America, Northern California & Northern Nevada (VOA, NCNN) in support of the Voices of Hope fundraising event on April 30, 2026, from 8:00 a.m. to 10:00 a.m. at the DoubleTree Hilton Hotel. The money raised for the Voices of Hope fundraising event will serve individuals experiencing homelessness, including in Roseville. The event features a program presentation with speakers who share their life experiences and the impact of VOA's services on their path to stability and independence. All attendees will be provided with a full breakfast. The sponsorship funds will be used to cover the costs of venue rental, catering, event marketing materials, etc. to ensure 100% of the event donations go towards program needs.

RECOMMENDATION

Staff recommends that the City Council consider a request for a $3,000 sponsorship from Council Discretionary Funds for Volunteers of America, Northern California & Northern Nevada (VOA, NCNN) in support of the Voices of Hope fundraising event on April 30, 2026, from 8:00 a.m. to 10:00 a.m. at the DoubleTree Hilton Hotel.

BACKGROUND

The Volunteers of America, Northern California & Northern Nevada (VOA, NCNN) is requesting a $3,000 sponsorship from Council Discretionary Funds in support of the Voices of Hope fundraising event on April 30, 2026, from 8:00 a.m. to 10:00 a.m. at the DoubleTree Hilton Hotel. The money raised for the Voices of Hope fundraising event will serve individuals experiencing homelessness. The VOA, NCNN has several programs in Roseville serving families, Veterans, and seniors experiencing homelessness. Although the fundraiser is being held in Sacramento, it is meant to raise funds for all of their programs, including those serving Roseville residents. This request is for a sponsorship for this event to highlight the partnership between the City of Roseville and VOA and highlight the City's efforts in supporting local organizations.

The event features a program presentation with speakers who share their life experiences and the impact of VOA's services on their path to stability and independence. All attendees will be provided with a full breakfast. The sponsorship funds will be used to cover the costs of venue rental, catering, event marketing materials, etc. to ensure 100% of the event donations go towards program needs.

This is a one-time request for Council Discretionary Funds, and VOA, NCNN has not received any grants from the City in the past.

The Citizens' Benefit Fund was established in 1993 with the net proceeds from the sale of the Roseville

Hospital. The City Council may, after receiving the recommendation of the Roseville Grants Advisory Commission, annually appropriate up to 90 percent of the annual earnings of the Citizens' Benefit Fund for the purpose of improving the quality of life for the citizens of the City of Roseville. The City Council, without the recommendation of the Roseville Grants Advisory Commission, may annually appropriate a minor amount up to $15,000 of the annual earnings for the purpose of improving the quality of life in Roseville.

FISCAL IMPACT

There is no fiscal impact to the City's General Fund. Annually, the Assistant City Manager/Chief Financial Officer allocates $15,000 of the annual earnings on the Citizens' Benefit Fund per section 4.06.040 in the Municipal Code and includes it in the annual budget along with the Citizens' Benefit Fund resources available for appropriation each year. These earnings are restricted for the purpose of improving the quality of life for Roseville residents and appropriated by the City Council. The balance remaining in the Council's Discretionary Funds for FY2025-26 is $9,321.

ENVIRONMENTAL REVIEW

The California Environmental Quality Act (CEQA) does not apply to activities that will not result in a direct or reasonably foreseeable indirect physical change in the environment, or is otherwise not considered a project as defined by CEQA Statute §21065 and CEQA State Guidelines §15060(c)(3) and §15378. The Council Discretionary Funds Request meets the above criteria and is not subject to CEQA. No additional environmental review is required.

CITY COUNCIL STRATEGIC PLAN/OVERARCHING GOALS

5. Support community engagement and advocacy

Respectfully Submitted,
Heather Blanco, Executive Assistant

Dennis Kauffman, Chief Financial Officer/Assistant City Manager

ATTACHMENTS:

1. VOA_Voices of Hope

REVIEWERS:

Heather Blanco, City Manager Department - City Manager	Created/Initiated - 2/9/2026
Heather Blanco, City Manager Department - City Manager	Approved - 2/9/2026
Dominick Casey, City Clerk Department	Approved - 2/11/2026
Kelly Aye, City Attorney Department	Approved - 2/12/2026
Katrina Six, City Clerk Department	Approved - 2/12/2026
Ryan DeVore, City Manager Department - Assistant City Manager	Approved - 2/17/2026
Dennis Kauffman, City Manager Department - Assistant City Manager	Approved - 2/17/2026
Michelle Sheidenberger, City Attorney Department	Approved - 2/21/2026
Dominick Casey, City Clerk Department	Approved - 2/23/2026
Katrina Six, City Clerk Department	Final Approval - 2/23/2026



VOICES OF HOPE

Volunteers of America®
NORTHERN CALIFORNIA & NORTHERN NEVADA

ABOUT US

Volunteers of America
NORTHERN CALIFORNIA & NORTHERN NEVADA

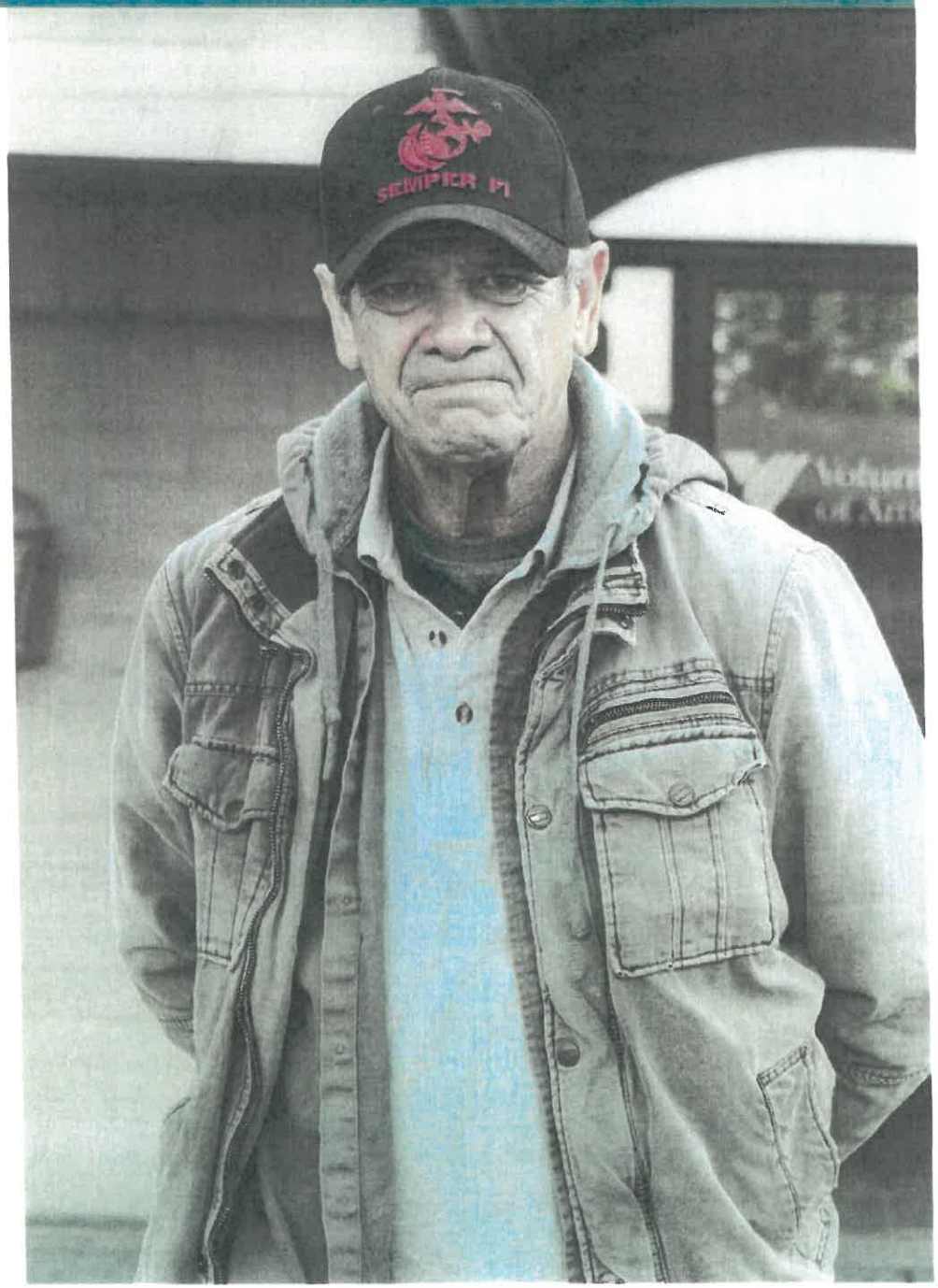

Volunteers of America Northern California and Northern Nevada (VOA NCNN) has been serving our community since 1911.

Our mission is to provide services that instill hope, increase self-worth and facilitate independence through quality housing, employment, and supportive services.

We transform the lives of families, seniors, veterans, and single adults with barriers to independence such as poverty, homelessness, mental illness, substance abuse, and trauma history.

TOGETHER WE ARE STRENGTHENING OUR COMMUNITY

4,000 men, women, and children sheltered & housed nightly

3,000+ kids went back to school fully prepared

2,200+ nutritious meals served daily

10,000+ toys given to families at Christmas



YOU CAN CHANGE THE LIVES OF THOSE EXPERIENCING HOMELESSNESS

By covering event costs, your partnership provides increased access to life-changing programs.

JOIN US to instill hope, increase self-worth and facilitate independence in men, women and children in need.

GIVE BACK to your community by uplifting people struggling with multiple barriers.

INCREASE your visibility as a community service leader.

STRENGTHEN our community by becoming part of the solution to help people rebuild their lives.

EXCLUSIVE STRATEGIC PARTNERSHIP OPPORTUNITIES

Ambassador

A gift of **$1,500** includes special recognition on all social media platforms and a thank you during the event.

Encourager

A gift of **$2,500** includes your company's logo on printed event materials, plus all the benefits from the Ambassador tier.

Advocate

A gift of **$5,000** secures special recognition on event recap, plus all benefits from Ambassador and Encourager tiers.

Impact Amplifier

A gift of **$10,000** will give you special access to a customized volunteer event for your company, a spotlight in our e-newsletter, and all benefits from other tiers.

Volunteer events will be scheduled on a case-by-case and program-needs basis.

VOA INVESTMENT FORM

Volunteers of America
NORTHERN CALIFORNIA & NORTHERN NEVADA

Yes! We want to help our community thrive. Please include us as a VOA Strategic Partner.

☐ $1,500 ☐ $2,500 ☐ $5,000 ☐ $10,000

CONTACT INFORMATION

Company Name _____

Primary Contact Name _____

Address _____

Phone _____ Email _____

PAYMENT INFORMATION

☐ Please send invoice or ☐ Please accept my payment of _____

By ☐ Check ☐ Visa ☐ Mastercard ☐ American Express ☐ Discover

Card # _____ Exp. Date _____ CVV _____

Address for credit card billing, if different from above

_____

Authorized signature _____ Date _____

Printed Name _____

Questions: Contact Victoria Monroe at vmonroe@voa-ncnn.org Mail completed form to vmonroe@voa-ncnn.org

OR Mail to: VOA - Attn: Victoria Monroe, 3434 Marconi Ave, Sacramento, CA 95821

City Council Communication

Meeting Date: 3/4/2026
Item #: IX.21
File #: 0200
Item ID: 2026-106

Title:	Tax Equity and Fiscal Responsibility Act Hearing for Siena Apartments
Contact:	Jeannine Thrash 916-774-5473 jthrash@roseville.ca.us

SUMMARY

Staff recommends Council conduct a Tax Equity and Fiscal Responsibility Act (TEFRA) Hearing to consider approval of the issuance of bonds by the California Statewide Communities Development Authority (CSCDA) in an amount not to exceed $17,000,000, for the benefit of Siena Roseville, L.P., to refinance the acquisition, rehabilitation, improvement and equipping of a 156-unit multifamily rental housing project generally known as Siena Apartments. Siena Roseville, L.P. has requested that CSCDA serve as the municipal issuer of tax-exempt multifamily housing revenue bonds. In order for all or a portion of the bonds to qualify as tax-exempt, the City must conduct a public hearing providing members of the community an opportunity to speak in favor of or against the use of tax-exempt bonds for the financing of the Project. Adoption of the resolution is solely for the purpose of satisfying the requirements of TEFRA, the Internal Revenue Code, and California Government Code Section 6500. There is no fiscal impact to the City.

RECOMMENDATION

1. Conduct a Tax Equity and Fiscal Responsibility Act Hearing in consideration of the issuance of tax-exempt bond financing by the California Statewide Communities Development Authority for the benefit of Siena Roseville, L.P., to refinance the acquisition, rehabilitation, improvement, and equipping of a 156-unit multifamily rental housing project generally known as Siena Apartments.
2. Adopt a resolution approving the issuance of Bonds by the California Statewide Communities Development Authority not to exceed $17,000,000, for the benefit of Siena Roseville, L.P., to refinance the acquisition, rehabilitation, improvement and equipping of a 156-unit multifamily rental housing project generally known as Siena Apartments.

BACKGROUND

Siena Roseville, L.P. (the “Borrower”) has requested that the California Statewide Communities Development Authority (“CSCDA”) serve as the municipal issuer of tax-exempt multifamily housing revenue bonds in an aggregate principal amount not to exceed $17,000,000 (the “Bonds”). The proceeds of the Bonds will be used to make a loan to the Borrower to refinance the acquisition, rehabilitation, improvement and equipping of a 156-unit affordable multifamily housing rental project located at 2501 Hayden Parkway, Roseville, California (the “Project”), which is owned and operated by the Borrower. Built in 2008, the Project has been well maintained and comprises 156 units with 50% of the units restricted at 50% of Area Medium Income (AMI) and 50% of the units restricted at 60% of AMI. The affordability restrictions on the property will remain in place until expiration of the 2007 California Tax Credit Allocation Committee ("TCAC") Agreement in 2062.

The City of Roseville previously held a prior Tax Equity and Fiscal Responsibility Act (TEFRA) hearing and

approved the original financing of the Project on June 20, 2007, and CSCDA issued the existing variable-rate bonds in December 2007. The proposed refunding bonds will be fixed-rate credit-enhanced for 10 years by Fannie Mae. The refunding and reissuance of the bonds will allow the Borrower to obtain an interest rate that is approximately 1% lower than taxable financing. The refunding bonds are considered a reissuance which requires a new TEFRA approval by the City.

In order for all or a portion of the Bonds to qualify as tax-exempt, the City of Roseville ("City") must conduct a public hearing (the "TEFRA Hearing") providing members of the community an opportunity to speak in favor of or against the use of tax-exempt bonds for the financing of the Project. Adoption of the resolution is solely for the purpose of satisfying the requirements of TEFRA, the Internal Revenue Code and California Government Code Section 6500. Prior to the TEFRA Hearing, reasonable notice must be provided to members of the community. Following the close of the TEFRA Hearing, an "applicable elected representative" of the governmental unit hosting the Project must provide its approval of the issuance of the Bonds for the financing of the Project.

CSCDA is a joint powers authority sponsored by the League of California Cities ("League") and the California State Association of Counties ("CSAC"). CSCDA was created by the League and CSAC in 1988 to enable local government and eligible private entities access to low-cost, tax-exempt financing for projects that provide a tangible public benefit, contribute to social and economic growth, and improve the overall quality of life in local communities throughout California. CSCDA consists of more than 530 members, including the City of Roseville, which has been a member since 1994. CSCDA has issued more than $75 billion through over 1,700 financings since 1988.

FISCAL IMPACT

There is no fiscal impact to the City. The Bonds will be issued as limited obligations of CSCDA, payable solely from revenues and receipts derived from a loan made by CSCDA to the Borrower from the proceeds of the Bond. The City bears no liability with respect to the issuance of the Bonds. Additionally, the City is not a party to any of the financing documents related to the Bond issuance and is not named in any of the disclosure documents describing the Bonds or the proposed financing.

ENVIRONMENTAL REVIEW

The California Environmental Quality Act (CEQA) does not apply to activities that will not result in a direct or reasonably foreseeable indirect physical change in the environment, or is otherwise not considered a project as defined by CEQA Statute §21065 and CEQA State Guidelines §15060(c)(3) and §15378. Adoption of the resolution to issue tax-exempt bond financing meets this criteria and is not subject to CEQA. In addition, environmental review for the Sienna Apartments was previously completed by Partner Engineering and Science, Inc., dated January 14, 2026, and is independent of this particular action. No additional environmental review is required.

CITY COUNCIL STRATEGIC PLAN/OVERARCHING GOALS

2. Remain fiscally responsible in a changing world

Respectfully Submitted,
Jeannine Thrash, Management Analyst

Scott Pettingell, Finance Director

ATTACHMENTS:
1. Resolution 26-054
2. TEFRA Public Hearing Notice

REVIEWERS:

Jeannine Thrash, Finance Department	Created/Initiated - 2/11/2026
Scott Pettingell, Finance Department	Approved - 2/17/2026
Kelly Aye, City Attorney Department	Approved - 2/18/2026
Katrina Six, City Clerk Department	Approved - 2/18/2026
Ryan DeVore, City Manager Department - Assistant City Manager	Approved - 2/19/2026
Dennis Kauffman, City Manager Department - Assistant City Manager	Approved - 2/19/2026
Michelle Sheidenberger, City Attorney Department	Approved - 2/19/2026
Dominick Casey, City Manager Department - City Manager	Approved - 2/19/2026
Katrina Six, City Clerk Department	Final Approval - 2/19/2026

RESOLUTION NO. 26-054

A RESOLUTION OF THE CITY COUNCIL OF THE CITY OF ROSEVILLE APPROVING THE ISSUANCE BY THE CALIFORNIA STATEWIDE COMMUNITIES DEVELOPMENT AUTHORITY OF EXEMPT FACILITY BONDS FOR THE SIENA APARTMENTS

WHEREAS, the California Statewide Communities Development Authority (the "Authority") is authorized pursuant to the provisions of California Government Code Section 6500 et seq. and the terms of an Amended and Restated Joint Exercise of Powers Agreement, dated as of June 1, 1988 (the "Agreement"), among certain local agencies throughout the State of California, including the City of Roseville (the "City"), to issue revenue bonds in accordance with Chapter 7 of Part 5 of Division 31 of the California Health and Safety Code for the purpose of financing multifamily rental housing projects; and

WHEREAS, Siena Roseville L.P. or a partnership of which St. Anton Capital, LLC (the "Developer") or a related person to the Developer is the general partner, has requested that the Authority adopt a plan of financing providing for the issuance of exempt facility bonds for a qualified residential rental project pursuant to Section 142(a)(7) of the Internal Revenue Code of 1986 (the "Code") in one or more series issued from time to time, including bonds issued to refund such exempt facility bonds in one or more series from time to time, and at no time to exceed $17,000,000 in outstanding aggregate principal amount (the "Bonds"), to finance or refinance the acquisition, construction and development of a multifamily rental housing project located at 2501 Hayden Parkway, Roseville, California (the "Project"); and

WHEREAS, pursuant to Section 147(f) of the Code, prior to their issuance, the Bonds are required to be approved by the "applicable elected representative" of the governmental units on whose behalf such bonds are expected to be issued and by a governmental unit having jurisdiction over the entire area in which any facility financed by such bonds is to be located, after a public hearing held following reasonable public notice; and

WHEREAS, the members of this City Council (this "City Council") are the applicable elected representatives of the City; and

WHEREAS, there has been published, at least 7 days prior to the date hereof, in a newspaper of general circulation within the City, a notice that a public hearing regarding the Bonds would be held on a date specified in such notice; and

WHEREAS, such public hearing was conducted on such date, at which time an opportunity was provided to interested parties to present arguments both for and against the issuance of the Bonds; and

WHEREAS, the Authority is also requesting that the City Council approve the issuance of any refunding bonds hereafter issued by the Authority for the purpose of refinancing the Bonds which financed the Project (the "Refunding Bonds"), but only in such cases where federal tax laws would not require additional consideration or approval by the City Council; and

WHEREAS, it is intended that this resolution shall constitute the approval of the issuance of the Bonds required by Section 147(f) of the Code and Section 9 of the Agreement;

NOW, THEREFORE, BE IT RESOLVED BY THE CITY COUNCIL OF THE CITY OF ROSEVILLE AS FOLLOWS:

Section 1. The above recitals are true and correct.

Section 2. The City Council hereby approves the issuance of the Bonds and the Refunding Bonds by the Authority for the purposes of financing the Project. It is the purpose and intent of the City Council that this resolution constitute approval of the issuance of the Bonds by the Authority for the purposes of (a) Section 147(f) of the Code by the applicable elected representative of the governmental unit having jurisdiction over the area in which the Project is located, and (b) Section 9 of the Agreement.

Section 3. The officers of the City are hereby authorized and directed, jointly and severally, to do any and all things and to execute and deliver any and all documents that they deem necessary or advisable in order to carry out, give effect to and comply with the terms and intent of this resolution and the financing approved hereby.

Section 4. The City Council expressly conditions its approval of this Resolution on its understanding that the City shall have no obligation whatsoever to pay any principal, interest, fees or any other costs associated with the Authority's issuance of the Bonds and the Refunding Bonds for the financing of the Project.

Section 5. This resolution shall take effect immediately upon its passage.

PASSED AND ADOPTED at a regular meeting of the City Council of the City of Roseville held on this ___ day of _____, 2026, by the following vote:

AYES:

NOES:

ABSENT:

_____

MAYOR

ATTEST:

_____

CLERK

NOTICE OF PUBLIC HEARING
SIENA APARTMENTS

NOTICE IS HEREBY GIVEN that, at 6:00 p.m., or as soon thereafter as the matter can be heard, on March 4, 2026, at the City Council Chambers, 311 Vernon Street, Roseville, California, the City Council of the City of Roseville (the "City") will conduct a public hearing as required by Section 147(f) of the Internal Revenue Code of 1986 (the "Code"), at which it will hear and consider information concerning a proposed plan of financing providing for the issuance by the California Statewide Communities Development Authority of exempt facility bonds for a qualified residential rental project pursuant to Section 142(a)(7) of the Code in one or more series issued from time to time, including bonds issued to refund such exempt facility bonds in one or more series from time to time, and at no time to exceed $17,000,000 in outstanding aggregate principal amount, to finance or refinance the acquisition, construction and development of a multifamily rental housing project located at 2501 Hayden Parkway, Roseville, California. The facilities are to be owned by Siena Roseville L.P. (the "Borrower") or a partnership of which St. Anton Capital, LLC (the "Developer") or a related person to the Developer is the general partner (the "Project").

Those wishing to comment on the proposed financing or refinancing and the nature and location of the Project may either appear in person at the public hearing or submit written comments, which must be received by the City prior to the hearing. Written comments should be sent to City of Roseville at 311 Vernon Street, Roseville, California 95678 Attention: City Clerk.

CITY CLERK
CITY OF ROSEVILLE

Dated: _____, 2026

City Council Communication

Meeting Date: 3/4/2026
Item #: IX.22
File #: 0800-03
Item ID: 2026-134

Title:	Roseville Municipal Code Updates - Electric General Service 5 Rate
Contact:	Kerri Crosby 916-746-1263 kcrosby@roseville.ca.us

SUMMARY

Staff recommends City Council introduce for first reading an ordinance amending sections 14.24.020 and 14.24.050 of Chapter 14.24 of the Roseville Municipal Code in regards to establishing a new General Service 5 rate class for Roseville Electric customers with recorded demand greater than 7,500 kW and a load factor of 85 percent or higher. The rate is designed to more accurately reflect the cost of service for extra-large customers with highly efficient usage patterns and maintain alignment with Roseville's cost-based rate policy.

RECOMMENDATION

Staff recommends City Council introduce for first reading an ordinance amending sections 14.24.020 and 14.24.050 of Chapter 14.24 of the Roseville Municipal Code in regards to the Electric General Service 5 Rate.

BACKGROUND

Roseville Municipal Code Section 14.24.020 establishes rate classifications to ensure fairness, equity, and alignment with cost of service. Customers with both high load factors and high peak demand generally incur lower per-kilowatt-hour costs because they utilize the electric distribution system more efficiently and spread fixed system costs over greater levels of consumption.

In June 2025, Roseville Electric and EES Consulting completed a comprehensive cost-of-service analysis across all customer classes. The analysis identified that customers with demand exceeding 7.5 MW and load factors of 85 percent or greater represent a distinct usage profile within the Very Large General Service category. As large-load characteristics evolve, establishing a separate classification enhances precision in aligning rates with the cost to serve these customers.

Creating an Extra-Large General Service (GS-5) rate for customers exceeding 7.5 MW with load factors of 85 percent or greater reinforces the City Council's adopted Rate Policies:

- Cost-Based Policy: Revenues match the cost to provide service.
- Adequacy Policy: Rates generate sufficient revenues to operate the utility and maintain a balanced budget.
- Fair and Equitable Policy: Customers pay in proportion to the cost to serve their class.
- Stability Policy: Rate structures support predictable and incremental adjustments over time.

The proposed GS-5 rate also aligns with the City Council Strategic Plan goal to remain fiscally responsible in a changing world and supports the strategy to balance utility operating costs to maintain competitive rates. Proactively refining rate classifications ensures the City continues to maintain financial integrity, competitive rates, and equitable treatment across all customer classes.

Based on these findings, staff recommends establishing a General Service 5 (GS-5) rate classification applicable to customers exceeding 7.5 MW in demand with a load factor of 85 percent or higher.

FISCAL IMPACT

The proposed General Service 5 (GS-5) rate reflects the distinct load characteristics of customers exceeding 7.5 MW with load factors of 85 percent or greater and is approximately 5 percent lower than the existing General Service 4 (GS-4) rate. This adjustment is consistent with the City Council's adopted Cost-Based, Adequacy, Fair and Equitable, and Stability Policies.

ENVIRONMENTAL REVIEW

The California Environmental Quality Act (CEQA) does not apply to activities that will not result in a direct or reasonably foreseeable indirect physical change in the environment, or is otherwise not considered a project as defined by CEQA Statute §21065 and CEQA State Guidelines §15060(c)(3) and §15378. Approval of amendments to the Roseville Municipal Code meet the above criteria and are not subject to CEQA. No additional environmental review is required.

CITY COUNCIL STRATEGIC PLAN/OVERARCHING GOALS

2. Remain fiscally responsible in a changing world

Respectfully Submitted,
Kerri Crosby, Electric Business Analyst

Daniel Beans, Electric Utility Director

ATTACHMENTS:

1. 14.24 RMC GS5 rate updates

REVIEWERS:

Kerri Crosby, Electric Department - Utility Billing	Created/Initiated - 2/11/2026
Joanna Cucchi, Electric Department - Financial & Administrative	Approved - 2/12/2026
Shawn Matchim, Electric Department - All	Approved - 2/13/2026
Daniel Beans, Electric Department - All	Approved - 2/13/2026
Kelly Aye, City Attorney Department	Approved - 2/17/2026
Katrina Six, City Clerk Department	Approved - 2/17/2026
Ryan DeVore, City Manager Department - Assistant City Manager	Approved - 2/17/2026
Dennis Kauffman, City Manager Department - Assistant City Manager	Approved - 2/17/2026
Michelle Sheidenberger, City Attorney Department	Approved - 2/18/2026

Dominick Casey, City Manager Department - City Manager	Approved - 2/18/2026
Katrina Six, City Clerk Department	Final Approval - 2/18/2026

ORDINANCE NO. _____

ORDINANCE OF THE COUNCIL OF THE CITY OF ROSEVILLE AMENDING SECTIONS 14.24.020 AND 14.24.050 OF CHAPTER 14.24 OF TITLE 14 OF THE ROSEVILLE MUNICIPAL CODE REGARDING ELECTRICAL ENERGY

THE CITY OF ROSEVILLE ORDAINS:

SECTION 1. The section of the Roseville Municipal Code listed above is hereby amended to read as shown on Attachment "A".

SECTION 2. This ordinance shall be effective at the expiration of thirty (30) days from the date of adoption.

SECTION 3. The City Clerk is hereby directed to cause this ordinance to be published in full at least once within fourteen (14) days after it is adopted in a newspaper of general circulation in the City, or shall within fourteen (14) days after its adoption cause this ordinance to be posted in full in at least three (3) public places in the City and enter in the Ordinance Book a certificate stating the time and place of said publication by posting.

PASSED AND ADOPTED by the Council of the City of Roseville this____day of _____, 20_, by the following vote on roll call:

AYES COUNCILMEMBERS:

NOES COUNCILMEMBERS:

ABSENT COUNCILMEMBERS:

_____

MAYOR

ATTEST:

_____

City Clerk

ATTACHMENT "A"

§ 14.24.020. Rate classification.

Rate classifications for sale of service to customers are as follows:

A. The residential rate is the rate charged for service to customers in single-family and multiple-family dwellings for noncommercial use.

B. The general service rates are the rates charged for service to customers engaged in all general service non-residential activities, whether commercial or noncommercial in nature, and the general service rate classifications are described as follows:

1. Small General Service (GS-1). The GS-1 rate applies to service to customers with metered monthly energy usage less than 8,000 kWh and with metered demand not exceeding 20 kW in a monthly billing period for six or more separate monthly billing periods in the prior calendar year.

2. Medium General Service (GS-2). The GS-2 rate applies to customers with metered monthly energy usage greater than 8,000 kWh or with metered demand greater than 20 kW during six or more monthly billing periods in the prior calendar year, and not greater than 500 kW in six or more separate monthly billing periods in the prior calendar year.

3. Large General Service (GS-3). The GS-3 rate applies to customers with metered demand greater than 500 kW during six or more monthly billing periods in the prior calendar year, and not greater than 1,000 kW in six or more separate monthly billing periods in the prior calendar year.

4. Very Large General Service (GS-4). The GS-4 rate applies to customers with metered demand greater than 1,000 kW during six or more monthly billing periods in the prior calendar year, and not greater than 7,500 kW in six or more separate monthly billing periods in the prior calendar year.

~~4.~~5. Extra Large General Service (GS-5). The GS-5 rate applies to customers with metered demand greater than 7,500 kW and load factor of 85 percent or higher during six or more separate monthly billing periods in the prior calendar year.

C. Solar, Wind, and/or Solar/Wind Hybrid Net Metering Rates. These rates shall apply to all eligible solar, wind, and/or solar/wind hybrid electric generation interconnected in parallel to the city distribution system, meeting all of Roseville Electric's Rule 21 terms and conditions. Failure to satisfy Roseville Electric's Rule 21 terms and conditions will result in the solar, wind, and/or solar/wind hybrid electric generation being deemed ineligible for these rates and may cause the solar, wind, and/or solar/wind hybrid electric generation to be prevented from parallel operation by Roseville Electric. Net metering rates are available on a first come, first served basis until that time when the total installed solar, wind, and/or solar/wind hybrid electric generation net metered generating capacity within the Roseville Electric service territory exceeds the maximum installed kW amount allowable as established by the city pursuant to its policies and state laws.

1. Net Metering Rate 1 (NM-1). The NM-1 rate applies to eligible residential customer-generators and small nonresidential solar customer-generators with a maximum annual demand (kW) of 10 kW or less. The NM-1 rate is available to customers until the total customer net meter installations exceed a five percent capacity cap, as stated herein.

Roseville Electric's five percent capacity cap will be reached when the total kilowatt (kW) demand of customer installed net meter installations reach five percent of Roseville Electric's distribution system historical peak demand. Effective October 1, 2018, the NM-1 rate will be closed to new customers without an active solar building

permit.

a. NM-1 Transition Period. Customers eligible for the NM-1 rate shall remain on the NM-1 rate until October 1, 2028, or through a period of 20 years from the last date of interconnection of the eligible renewable energy generation facility, whichever is later. After the NM-1 rate is closed, existing NM-1 customers can expand their existing system by up to 10 percent and remain on the NM-1 rate.

2. Standard Net Metering. Nonresidential customer-generators with a maximum annual demand greater than 10 kW are not eligible for the NM-1 rate. These customer-generators default to the standard net metering procedures as outlined in the Municipal Code and Roseville Electric Rule 21. Standard net metering is available to customers until the total customer net meter installations exceed a five percent capacity cap, as stated herein. Roseville Electric's five percent capacity cap will be reached when the total kilowatt (kW) demand of customer installed net meter installations reach five percent of Roseville Electric's distribution system historical peak demand. Effective October 1, 2018, the standard net metering rate will be closed to new customers without an active solar building permit.

a. Standard Net Metering Transition Period. Customers eligible for standard net metering shall remain on the standard net metering rate until October 1, 2028 or through a period of 20 years from the last date of interconnection of the eligible renewable energy generation facility, whichever is later. After the standard net metering rate is closed, existing standard net metering customers can expand their existing system by up to 10 percent and remain on the standard net metering rate.

3. Roseville solar 2.0 rate (RS-2) is applicable to customer-generators with eligible renewable generation such as solar, wind, and/or solar/wind hybrid electric system interconnections of less than one megawatt (1 MW) once the NM-1 rate and standard net metering are closed to new customers as noted above.

D. The outdoor lighting rate is the rate charged to customers for service provided to unmetered outdoor lighting facilities, other than facilities for lighting of public streets.

E. The street lighting rate is the rate charged to customers for service provided to unmetered city-owned lights for lighting public streets.

F. The traffic signal rate is the rate charged to customers for service provided to all city-owned traffic signals and associated equipment.

G. Determination of the applicable rate classification as described herein for new customers will be determined by Roseville Electric in accordance with generally accepted engineering standards. If a customer experiences a significant operational change that materially alters load characteristics, service requirements, or system impacts, Roseville Electric may review and revise the customer's rate classification. Such changes must be supported by engineering analysis and shall be subject to review and written approval by the Electric Utility Director.

§ 14.24.050. General service rates.

A. Effective June 1, 2024, the general service rates applied to service within a monthly billing period and charged to general service customers shall be as follows:

1. Small General Services (GS-1) Rate. The GS-1 monthly rates on monthly billings will be as follows:

Basic Service Charge	$44.00 per meter, per month
Energy Charge	
Winter	$0.1150 per kWh
Summer	$0.1330 per kWh
California Renewable Energy Requirement Surcharge	$0.0056 per kWh
California Greenhouse Gas Emission Reduction Requirement Surcharge	$0.0002 per kWh

Hydroelectric Adjustment	Annually adjusted charge or credit on billings that will be applied from July 1 to June 30 each fiscal year, as prescribed in Section 14.24.052
Energy Cost Surcharge	Effective February 1, 2023 to December 31, 2024 an energy cost surcharge of $0.01235 per kWh

2. Medium General Service (GS-2) Rate. The GS-2 monthly rates on monthly billings will be as follows:

Basic Service Charge	$65.00 per meter, per month
Demand Charge	$6.16 per kW
Energy Charge	
Winter	$0.1186 per kWh
Summer	$0.1427 per kWh
California Renewable Energy Requirement Surcharge	$0.0056 per kWh
California Greenhouse Gas Emission Reduction Requirement Surcharge	$0.0002 per kWh
Hydroelectric Adjustment	Annually adjusted charge or credit on billings that will be applied from July 1 to June 30 each fiscal year, as prescribed in Section 14.24.052
Energy Cost Surcharge	Effective February 1, 2023 to December 31, 2024 an energy cost surcharge of $0.01143 per kWh

3. Large General Service (GS-3) Rate. TOU rates are mandatory for all customers receiving service in the GS-3 rate classification. Customers not having the necessary equipment to meter consumption on a TOU basis will be charged at the GS-2 rate until the necessary equipment is installed. Customers with facilities where the necessary TOU equipment is infeasible or impractical to employ, as determined by Roseville Electric, will be billed at the GS-2 rate. Discounts for primary services are provided pursuant to Section 14.24.050(D).

   The GS-3 monthly rates on monthly billings will be as follows:

Basic Service Charge	$561.00 per meter, per month
Demand Charge	
Winter	$6.60 per kW

Summer	$11.57 per kW
Energy Charge	
Winter	
Off Peak	$0.0801 per kWh
On Peak	$0.1045 per kWh
Super Peak	$0.1045 per kWh
Summer	
Off Peak	$0.1045 per kWh
On Peak	$0.1287 per kWh
Super Peak	$0.1652 per kWh
California Renewable Energy Requirement Surcharge	$0.0056 per kWh
California Greenhouse Gas Emission Reduction Requirement Surcharge	$0.0002 per kWh
Hydroelectric Adjustment	Annually adjusted charge or credit on billings that will be applied from July 1 to June 30 each fiscal year, as prescribed in Section 14.24.052
Energy Cost Surcharge	Effective February 1, 2023 to December 31, 2024 an energy cost surcharge of $0.00992 per kWh

4. Very Large General Service (GS-4) Rate. TOU rates are mandatory for all customers receiving service in the GS-4 rate classification. Discounts for primary services are defined in Section 14.24.050(D).

   The GS-4 TOU monthly rates on monthly billings will be as follows:

Basic Service Charge	$641.00 per meter, per month
Demand Charge	
Winter	$6.71 per kW
Summer	$11.51 per kW
Energy Charge	
Winter	
Off Peak	$0.0789 per kWh
On Peak	$0.1009 per kWh
Super Peak	$0.1009 per kWh

Summer	
Off Peak	$0.1028 per kWh
On Peak	$0.1249 per kWh
Super Peak	$0.1635 per kWh
California Renewable Energy Requirement Surcharge	$0.0056 per kWh
California Greenhouse Gas Emission Reduction Requirement Surcharge	$0.0002 per kWh
Hydroelectric Adjustment	Annually adjusted charge or credit on billings that will be applied from July 1 to June 30 each fiscal year, as prescribed in Section 14.24.052
Energy Cost Surcharge	Effective February 1, 2023 to December 31, 2024 an energy cost surcharge of $0.00843 per kWh

B. Effective January 1, 2025, the general service rates applied to service within a monthly billing period and charged to general service customers shall be as follows:

1. Small General Service (GS-1) Rate. The GS-1 monthly rates on monthly billings will be as follows:

Basic Service Charge	$44.00 per meter, per month
Energy Charge	
Winter	$0.1422 per kWh
Summer	$0.1642 per kWh
California Renewable Energy Requirement Surcharge	$0.0056 per kWh
California Greenhouse Gas Emission Reduction Requirement Surcharge	$0.0002 per kWh
Hydroelectric Adjustment	Annually adjusted charge or credit on billings that will be applied from July 1 to June 30 each fiscal year, as prescribed in Section 14.24.052

2. Medium General Service (GS-2) Rate. The GS-2 monthly rates on monthly billings will be as follows:

Basic Service Charge	$65.00 per meter, per month
Demand Charge	$6.16 per kW
Energy Charge	
Winter	$0.1433 per kWh
Summer	$0.1724 per kWh
California Renewable Energy Requirement Surcharge	$0.0056 per kWh
California Greenhouse Gas Emission Reduction Requirement Surcharge	$0.0002 per kWh
Hydroelectric Adjustment	Annually adjusted charge or credit on billings that will be applied from July 1 to June 30 each fiscal year, as prescribed in Section 14.24.052

3. Large General Service (GS-3) Rate. TOU rates are mandatory for all customers receiving service in the GS-3 rate classification. Customers not having the necessary equipment to meter consumption on a TOU basis will be charged at the GS-2 rate until the necessary equipment is installed. Customers with facilities where the necessary TOU equipment is infeasible or impractical to employ, as determined by Roseville Electric, will be billed at the GS-2 rate. Discounts for primary services are provided pursuant to Section 14.24.050(D).

   The GS-3 monthly rates on monthly billings will be as follows:

Basic Service Charge	$561.00 per meter, per month
Demand Charge	
Winter	$6.60 per kW
Summer	$11.57 per kW
Energy Charge	
Winter	
Off Peak	$0.0975 per kWh
On Peak	$0.1272 per kWh
Super Peak	$0.1272 per kWh
Summer	
Off Peak	$0.1272 per kWh
On Peak	$0.1566 per kWh
Super Peak	$0.2010 per kWh

California Renewable Energy Requirement Surcharge	$0.0056 per kWh
California Greenhouse Gas Emission Reduction Requirement Surcharge	$0.0002 per kWh
Hydroelectric Adjustment	Annually adjusted charge or credit on billings that will be applied from July 1 to June 30 each fiscal year, as prescribed in Section 14.24.052

4. Very Large General Service (GS-4) Rate. TOU rates are mandatory for all customers receiving service in the GS-4 rate classification. Discounts for primary services are defined in Section 14.24.050(D).

   The GS-4 TOU monthly rates on monthly billings will be as follows:

Basic Service Charge	$641.00 per meter, per month
Demand Charge	
Winter	$6.71 per kW
Summer	$11.51 per kW
Energy Charge	
Winter	
Off Peak	$0.0950 per kWh
On Peak	$0.1215 per kWh
Super Peak	$0.1215 per kWh
Summer	
Off Peak	$0.1238 per kWh
On Peak	$0.1504 per kWh
Super Peak	$0.1969 per kWh
California Renewable Energy Requirement Surcharge	$0.0056 per kWh
California Greenhouse Gas Emission Reduction Requirement Surcharge	$0.0002 per kWh
Hydroelectric Adjustment	Annually adjusted charge or credit on billings that will be applied from July 1 to June 30 each fiscal year, as prescribed in Section 14.24.052

5. Effective April 19, 2026 , Extra Large General Service (GS-5) Rate. TOU rates are mandatory for all customers receiving service in the GS-5 rate classification. Discounts for primary services are defined in Section 14.24.050 (D).

The GS-5 TOU monthly rates on monthly billing will be as follows:

Basic Service Charge	$641.00 per meter, per month
Demand Charge	$7.90 per kW
Energy Charge	
Off Peak	$0.1120 per kWh
On Peak	$0.1120 per kWh
Super Peak	$0.1120 per kWh
California Renewable Energy Requirement Surcharge	$0.0056 per kWh
California Greenhouse Gas Emission Reduction Requirement Surcharge	$0.0002 per kWh
Hydroelectric Adjustment	Annually adjusted charge or credit on billings that will be applied from July 1 to June 30 each fiscal year, as prescribed in Section 14.24.052

C. Aggregation of Demand. Accounts with multiple GS-3 service, or a combination of GS-3 and GS-4 service that combine to exceed 1,000 kW of billed demand in any six months of

the prior calendar year will receive a discount of $0.003 per kWh on the GS-3 service total monthly billed energy.

D. Primary Service. Service provided at 12,000 volts or higher under delivery arrangements approved by Roseville Electric shall receive a discount of two percent of the energy and demand charges.

E. Contract Rates. The city reserves the right to negotiate and provide, by contract, service at rates other than those specified in the municipal code.

F. Standby Service Rate.

1. Applicability. This service is applicable to any general service customer who utilizes, in whole or in part, generating facilities, as defined in Roseville Electric Rule 21 standards for interconnection, other than solar, wind or solar/wind hybrid customer-owned generating facilities, to supply all or part of such customer's power requirements, and where:

   a. Based upon the manufacturer's nameplate rating the generating facilities do not exceed 100 percent of their projected demand as determined by Roseville Electric.

   b. Pursuant to Rule 21 standards for interconnection, generating facilities are connected to the city's electrical distribution system. The customer shall not operate such customer-owned generating facilities in parallel with the city's electrical system unless otherwise approved in advance by Roseville Electric.

   An interconnection agreement between the city and customer is required for service under this rate, when the customer-owned generating facilities are interconnected with the city's electrical system.

2. Effective January 1, 2017 the standby service charge ($/kW of "rated capacity" per month) shall be as follows:

Secondary voltage	$6.71
Primary voltage	$6.58

"Rated capacity" is a fixed kilowatts value determined by the manufacturer's rating of the generator unit. In addition to the auxiliary or standby service rate, the city will continue to bill for all applicable charges under the appropriate rate schedule, including, but not limited to, basic service, energy and demand charges.

G. Demand/kWh Criteria. Service provided under general service rates shall be periodically evaluated for compliance with rate classification monthly demand and/or kWh criteria. If the monthly demand and/or kWh criteria are not satisfied, the service may be transferred to the appropriate general service rate effective with the next available billing cycle. Exceptions are at the discretion of Roseville Electric or by a customized customer contract (if applicable). Compliance with monthly demand/kWh criteria shall be determined in accordance with Section 14.24.020 rate classification.

H. Advanced Metering Service Charge. The advanced metering service charge is required for all GS-2 customers who have access to the city's online energy profiler system. GS-2 service, whose maximum demand is equal to or greater than 250 kW in two or more summer months (as defined in Section 14.24.021) in the prior calendar year, will receive a special load profile meter, and the ability to remotely access usage data. Customers with facilities where the necessary metering equipment is infeasible or impractical to employ, as determined by Roseville Electric, will be exempted from this charge. The city will charge a monthly service fee of $42.00 to cover maintenance, software support and related expenses.